THIS DRAWING IS UNPUBLISHED. RELEASED FOR PUBLICATION -.- .
© COPYRIGHT - By - TE CONNECTIVITY. ALL RIGHTS RESERVED.

LOC	DIST
CM	00

REVISIONS

P	LTR	DESCRIPTION	DATE	DWN	APVD
	H	ECR-13-008537	16SEP13	M.T	D.Z
	H1	ECO-14-010907	10SEP2014	KR	OC

1. MATERIAL: CONNECTOR-NYLON UL94V-2 (BLUE).
CONTACTS-0.30 [.012] THICK COPPER ALLOY
0.00038 [.000015] GOLD OR 0.00038 [.000015]
TOTAL GOLD FLASH OVER PALLADIUM NICKEL,
PER TE CONNECTIVITY'S DISCRETION, IN CONTACT
AREA WITH MATTE TIN FOR 644040-2
THRU 2-644040-8, MATTE WHISKER MITIGATED
TIN FOR 3-644040-2 THRU 5-644040-8 OVER
NICKEL UNDERPLATE.

2. CONTACTS ACCEPT 26 AWG WIRE WITH 1.52 [.060] MAX INSULATION DIAMETER.

3. CONTACTS MUST ACCEPT 0.64±0.03 [.025±.001] SQUARE POST AND REMAIN LOCKED IN POSITION.

4. IDENTIFICATION NUMBER FOR LAST CIRCUIT MAY NOT APPEAR ON ALL ASSEMBLIES.

5. DIMENSIONS IN BRACKETS ARE IN INCHES.

6. HOUSING FEATURES ARE: CLOSED END WITH LOCKING RAMP AND WITH POLARIZING TAB.

7. OBSOLETE PARTS: OBSOLETE CIS STREAMLINING PER D.RENAUD/D.SINISI

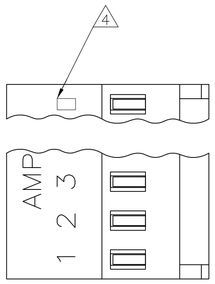

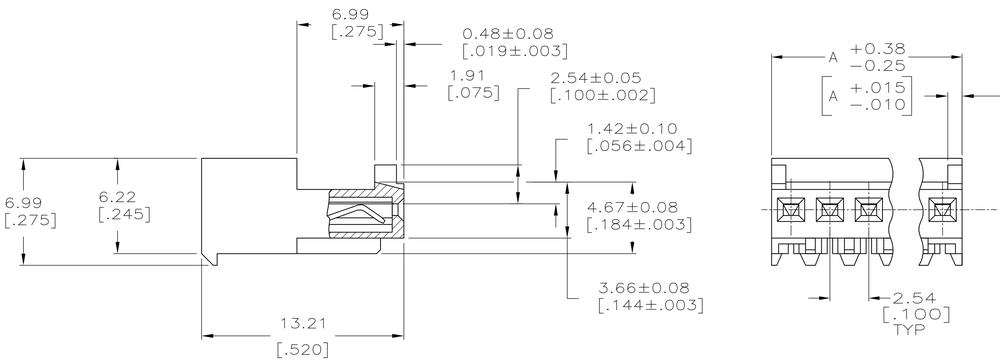

LEAD FREE

DIM A	NO.OF POSN	ASSEMBLY
35.56 [1.400]	14	4-644040-4
33.02 [1.300]	13	4-644040-3
30.48 [1.200]	12	4-644040-2
27.94 [1.100]	11	4-644040-1
25.40 [1.000]	10	4-644040-0
22.86 [.900]	9	3-644040-9
20.32 [.800]	8	3-644040-8
17.78 [.700]	7	3-644040-7
15.24 [.600]	6	3-644040-6
12.70 [.500]	5	3-644040-5
10.16 [.400]	4	3-644040-4
7.62 [.300]	3	3-644040-3
5.08 [.200]	2	3-644040-2

LEAD FREE

DIM A	NO.OF POSN	ASSEMBLY
35.56 [1.400]	14	7 1-~~644040-4~~
33.02 [1.300]	13	1-644040-3
30.48 [1.200]	12	1-644040-2
27.94 [1.100]	11	1-644040-1
25.40 [1.000]	10	7 1-~~644040-0~~
22.86 [.900]	9	644040-9
20.32 [.800]	8	644040-8
17.78 [.700]	7	644040-7
15.24 [.600]	6	644040-6
12.70 [.500]	5	7 ~~644040-5~~
10.16 [.400]	4	7 ~~644040-4~~
7.62 [.300]	3	7 ~~644040-3~~
5.08 [.200]	2	644040-2

METRIC

THIS DRAWING IS A CONTROLLED DOCUMENT.

DIMENSIONS: mm [INCHES]

TOLERANCES UNLESS OTHERWISE SPECIFIED:
0 PLC ±
1 PLC ±
2 PLC ± 0.13 [.005]
3 PLC ±
4 PLC ±
ANGLES ±

MATERIAL 1
FINISH 1

DWN S. HOOVER 20-DEC-2004
CHK D. BOSSI 20-DEC-2004
APVD D. BOSSI 20-DEC-2004
PRODUCT SPEC 108-1050
APPLICATION SPEC 114-1019
WEIGHT

TE Connectivity

NAME MTA .100 CONNECTOR ASSEMBLY 26 AWG, STANDARD

SIZE	CAGE CODE	DRAWING NO	RESTRICTED TO
A1	00779	C-644040	

CUSTOMER DRAWING SCALE 5:1 SHEET 1 OF 1 REV H1