THIS DRAWING IS UNPUBLISHED. RELEASED FOR PUBLICATION -,- .
© COPYRIGHT - BY TYCO ELECTRONICS CORPORATION. ALL RIGHTS RESERVED.

| LOC | DIST |
|---|---|
| G | 14 |

REVISIONS

| P | LTR | DESCRIPTION | DATE | DWN | APVD |
|---|---|---|---|---|---|
| | A1 | REV PER ECR 07-016469 | 18JUL07 | JR | TM |

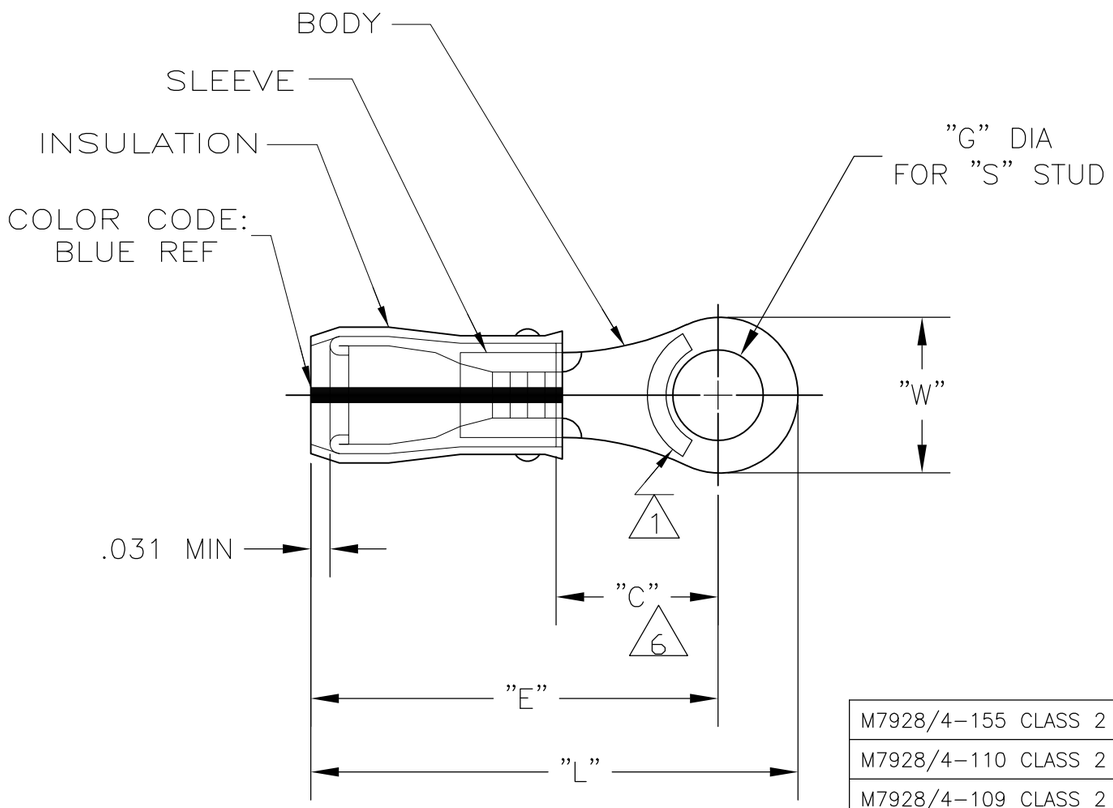


1. STAMP AMP 16-14* APPROX AS SHOWN
2. WIRE INSULATION DIA: .105-.150
3. TONGUE MATERIAL THK: .031±.002
4. BODY & SLEEVE: TIN PLATE PER ASTM B545,
5. BODY & SLEEVE- CU PER ASTM B152
   INSULATION - PVF2, COLOR - NATURAL
6. APPLIES FROM EDGE OF METAL WIRE BARREL TO CENTER OF STUD HOLE.

| MILITARY P/N & CLASS | "W" | "C" | "E" | "G" DIA | "S" | "L" | QTY | PACKAGE TYPE | PART NO |
|---|---|---|---|---|---|---|---|---|---|
| M7928/4-155 CLASS 2 | .713 | .530 MIN | .934 MAX | .515±.005 | 1/2" | 1.298 MAX | 1000 | LOOSE PIECE | 1-696423-0 |
| M7928/4-110 CLASS 2 | .531 | .546 MIN | .950 MAX | .390±.005 | 3/8" | 1.223 MAX | 1000 | LOOSE PIECE | 696423-9 |
| M7928/4-109 CLASS 2 | .469 | .437 MIN | .841 MAX | .328±.005 | 5/16" | 1.083 MAX | 1000 | LOOSE PIECE | 696423-8 |
| M7928/4-154 CLASS 2 | .469 | .437 MIN | .841 MAX | .265±.005 | 1/4" | 1.083 MAX | 1000 | LOOSE PIECE | 696423-7 |
| M7928/4-108 CLASS 2 | .312 | .281 MIN | .685 MAX | .197±.003 | #10 | .849 MAX | 1000 | LOOSE PIECE | 696423-6 |
| M7928/4-153 CLASS 2 | .312 | .281 MIN | .685 MAX | .171±.003 | #8 | .849 MAX | 1000 | LOOSE PIECE | 696423-5 |
| M7928/4-107 CLASS 2 | .312 | .281MIN | .685 MAX | .145±.003 | #6 | .849 MAX | 1000 | LOOSE PIECE | 696423-4 |
| M7928/4-106 CLASS 2 | .250 | .171 MIN | .575 MAX | .145±.003 | #6 | .708 MAX | 1000 | LOOSE PIECE | 696423-3 |
| M7928/4-152 CLASS 2 | .250 | .171 MIN | .575 MAX | .119±.003 | #4 | .708 MAX | 1000 | LOOSE PIECE | 696423-2 |

AMP INCORPORATED
CUSTOMER SERVICE SYSTEMS

| | |
|---|---|
| FOR ADDITIONAL PRODUCT INFORMATION OR COPIES OF DRAWINGS AND TECHNICAL DOCUMENTS | PRODUCT INFORMATION CENTER 1-800-522-6752 |
| FOR APPLICATION TOOLING INFORMATION | TOOLING ASSISTANCE CENTER 1-800-722-1111 |
| FOR ORDER ENTRY | 1-800-526-5142 |

THIS DRAWING IS A CONTROLLED DOCUMENT FOR AMP INCORPORATED. IT IS SUBJECT TO CHANGE AND THE CONTROLLING ENGINEERING ORGANIZATION SHOULD BE CONTACTED FOR THE LATEST REVISION.

MAX RECOMMENDED OPERATING TEMPERATURE: 150°C MAX

VOLTAGE RATING: -

CIRCULAR MIL AREA: 1.04-2.62mm² [2,050-5,180] STRANDED

THIS DRAWING IS A CONTROLLED DOCUMENT.

DIMENSIONS: INCHES

TOLERANCES UNLESS OTHERWISE SPECIFIED:
0 PLC ± -
1 PLC ± -
2 PLC ± -
3 PLC ± -
4 PLC ± -
ANGLES ± -

MATERIAL - 5

FINISH - 4

| | | |
|---|---|---|
| DWN | JR RUTH | 22JUL05 |
| CHK | T MICHIELUTTI | 22JUL05 |
| APVD | T MICHIELUTTI | 22JUL05 |
| PRODUCT SPEC | — | |
| APPLICATION SPEC | — | |
| WEIGHT | — | |

Tyco Electronics
Tyco Electronics Corporation
Harrisburg, Pa 17105-3608

NAME
TERMINAL, RING TONGUE,
PVF2 , P.I.D.G.
WIRE SIZE: 16-14 AWG

| SIZE | CAGE CODE | DRAWING NO | RESTRICTED TO |
|---|---|---|---|
| A3 | 00779 | C-696423 | — |

CUSTOMER DRAWING

| SCALE | SHEET | REV |
|---|---|---|
| 4:1 | 1 OF 1 | A1 |

# Mouser Electronics

Authorized Distributor

Click to View Pricing, Inventory, Delivery & Lifecycle Information:

TE Connectivity:

696423-5