DRAWING MADE IN THIRD ANGLE PROJECTION

PART NUMBER	REV	FIRST USED
1385417-1	B	122500-1
1385417-2	B	565435-5
1385417-3	B	354500-1

/home/us014442/dm.tecmod

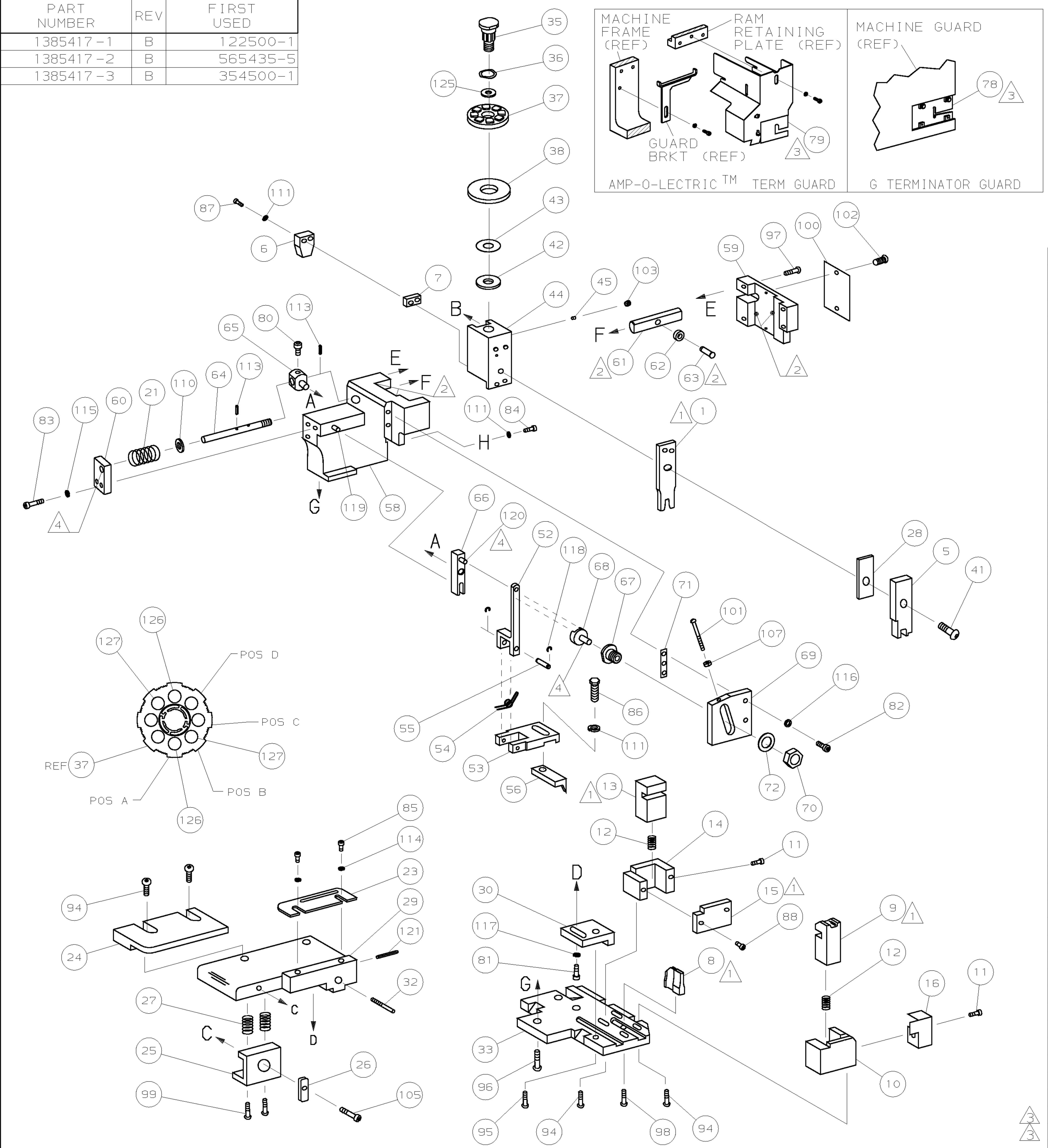

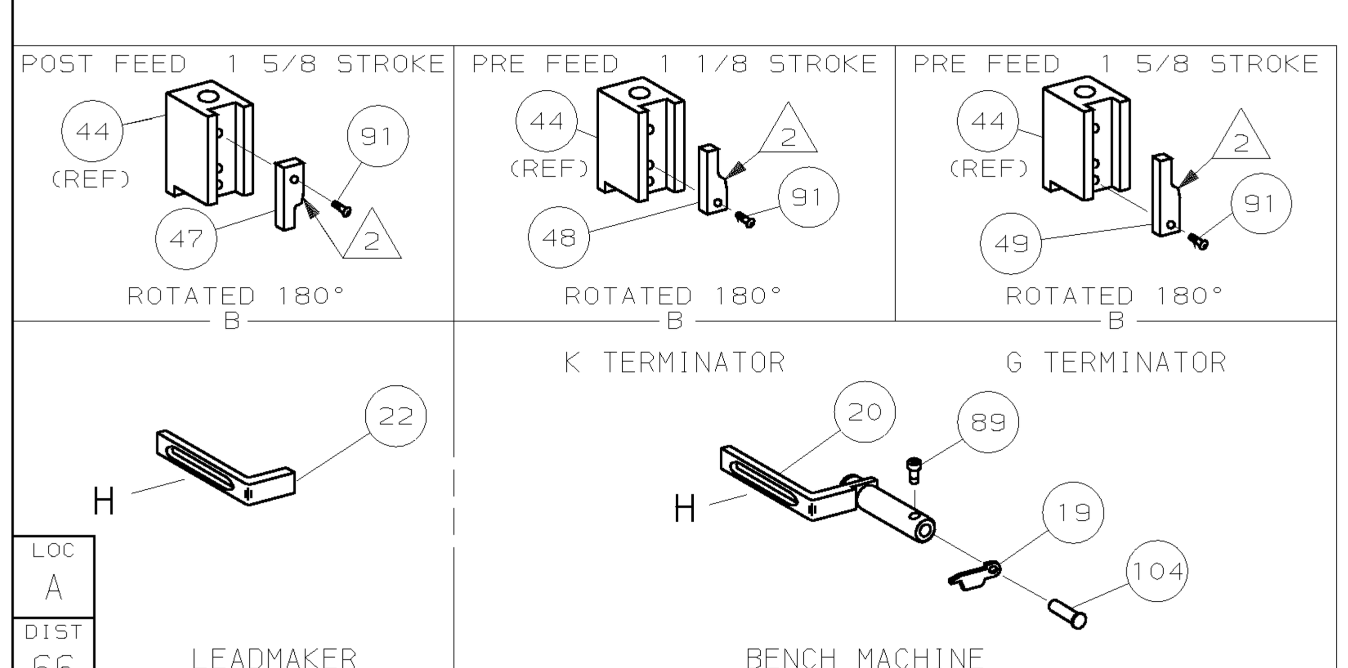

1. RECOMMENDED SPARE PARTS.
2. GREASE LIGHTLY.
3. GUARD MUST BE IN PLACE WHEN OPERATING APPLICATOR IN A BENCH MACHINE.
4. LUBRICATE DAILY USING NO. 20 MACHINE OIL.
5. ITEMS WITH QTY OF REF SPECIFIED (EXCEPT ITEMS 78 AND 79) ARE USED ON ITEM 46.

TERMINAL NAME: TERMINAL

AMP TERM PN	MFR TERM PN
1572098	520918BC02

LEAR TERMINAL AMP CRIMP SPECS

PAD LTR	CRIMP HEIGHT	WIRE SIZE
A	.101 ±.002 [2.57 ±0.05mm]	10
B	.088 ±.002 [2.23 ±0.05mm]	12
C	NOT	USED
D	NOT	USED

CRIMP	SIZE	TYPE	RANGE
WIRE	.190 [4.83mm]	F	12-10
INSUL	-	-	-

WIRE STRIP LENGTH	TERM APPL SPEC	FEED	APPL INSTRUCTION	SET UP GAGE	LAYOUT
.142-.158	NONE	.588	408-8040	458637-1	L2663

-1	LEADMAKER	MECH POST FEED
-2	BENCH MODEL K	MECH PRE FEED
-3	BENCH MODEL G	MECH PRE FEED

	-3	-2	-1	U/M	DWG SIZE	PART NO	DESCRIPTION	ITEM NO
								129
								128
	2	2	2	-	C	1-354779-4	PIN, WIRE DISC (.3060)B	127
	2	2	2	-	C	8-354778-5	PIN, WIRE DISC (.2920)A	126
	1	1	1	-	A	986950-1	WASHER, FLAT PRECISION	125
	1	1	1	-	A	217238-1	GENERAL INSTRUCTION PACKAGE	124
	1	1	1	-	-	4088040	SF APPL INST 408-8040	123
								122
	1	1	1	-	A	4-21028-0	PIN,SLT SPR(ø.093x.75)ST GDE PL	121
	REF	REF	REF	-	A	1-21030-1	PIN,DOWEL(ø.187x.50)LEVER	120
	REF	REF	REF	-	A	1-21030-6	PIN,DOWEL(ø.187x1.25)HOUSING	119
	REF	REF	REF	-	A	21045-3	RING,RET "C"(ø.187)FD FING PIN	118
	1	1	1	-	A	21024-5	WASHER, LOCK(#10)ADJ BLOCK	117
	REF	REF	REF	-	A	21024-5	WASHER,LOCK(#10)ADJ PLATE	116
	REF	REF	REF	-	A	21024-5	WASHER,LOCK(#10)FEED GDE ROD	115
	2	2	2	-	A	21024-2	WASHER,LOCK(#4)FRONT STP GUIDE	114
	REF	REF	REF	-	A	5-21028-1	PIN,SLT SPR(ø.125x.50)ADJ ROD	113
								112
	4	4	4	-	A	21024-4	WASHER,LOCK(#8)STRIPPER	111
	REF	REF	REF	-	A	21899-4	WASHER,FLAT(ø5/16)SCREW ADJ	110
								109
								108
	REF	REF	REF	-	A	21068-5	NUT,HEX(6-32)FEED ADJ	107
								106
	1	1	1	-	A	22353-8	SCR,SHLD(ø.187x.25)DRAG LEVER	105
	1	1	-	-	A	992031-1	PIN, CLEVIS	104
	1	1	1	-	A	21009-2	SCR,SKT SET(1/4-20x.25 LW)RAM	103
	2	2	2	-	A	21017-2	SCR,DRIVE(#2x.19)ID PLATE	102
	REF	REF	REF	-	A	6-23715-5	SCR,PAN HD(6-32x1.50)FEED ADJ	101
	1	1	1	-	B	461264-1	PLATE, IDENTIFICATION	100
	2	2	2	-	A	3-21002-0	SCR,BHC(10-32x.88)DRAG	99
	1	1	1	-	A	22733-8	SCR,BHC(8-32x.38 LW)ANVIL	98
	REF	REF	REF	-	A	2-21002-9	SCR,BHC(10-32x.75)CAP	97
	REF	REF	REF	-	A	2-22733-8	SCR,BHC(1/4-20x.62)HOUSING	96
	REF	REF	REF	-	A	2-21002-7	SCR,BHC(10-32x.50)SG ADJ BLOCK	95
	6	6	6	-	A	2-21002-2	SCR,BHC(8-32x.50)TERM H DWN	94
								93
								92
	1	1	1	-	A	1-21002-7	SCR,BHC(6-32x.38)CAM	91
								90
	1	1	-	-	A	7-21000-9	SCR,SHC(4-40x.19)STRIPPER	89
	2	2	2	-	A	1-21000-8	SCR,SHC(6-32x.25)R SHEAR PLATE	88
	2	2	2	-	A	3-21000-1	SCR,SHC(8-32x1.00)DEP-HOLD	87
	1	1	1	-	A	2-22603-0	SCR,HEX HD(8-32x.31)FEED FINGER	86
	2	2	2	-	A	1-21000-3	SCR,SHC(4-40x.25)FR ST GUIDE	85
	1	1	1	-	A	2-21000-7	SCR,SHC(8-32x.50)STRIPPER	84
	REF	REF	REF	-	A	3-21000-7	SCR,SHC(10-32x.75)FEED ROD GD	83
	REF	REF	REF	-	A	3-21000-6	SCR,SHC(10-32x.62)FD ADJ BLK	82
	1	1	1	-	A	3-21000-4	SCR,SHC(10-32x.38)SG ADJ BL	81
	REF	REF	REF	-	A	3-21000-4	SCR,SHC(10-32x.38)PIVOT BLK	80
△3	-	REF	-	-	B	455749-1	GUARD, WINDOW	79
△3	REF	-	-	-	B	679532-1	INSERT, GUARD	78
								77
								76
								75
								74
								73
	REF	REF	REF	-	A	458109-1	WASHER, SPECIAL	72
	REF	REF	REF	-	A	690517-1	SPACER	71
	REF	REF	REF	-	B	22594-8	NUT,HEX(1/2-20)	70
	REF	REF	REF	-	B	240628-1	PLATE, ADJUSTMENT	69
	REF	REF	REF	-	B	240626-1	SHAFT, PIVOT	68
	REF	REF	REF	-	B	240633-1	BUSHING	67
	REF	REF	REF	-	A	455680-1	LEVER, INTERMEDIATE	66
	REF	REF	REF	-	B	240629-1	BLOCK, PIVOT	65
	REF	REF	REF	-	A	240632-2	SCREW, ADJ FEED ROD	64
	REF	REF	REF	-	B	240659-3	PIN, CAM ROLLER	63
	REF	REF	REF	-	B	240658-1	ROLLER, CAM	62
	REF	REF	REF	-	B	454398-2	ROD, FEED	61
	REF	REF	REF	-	A	454178-1	GUIDE, FEED ROD	60
	REF	REF	REF	-	C	454220-1	CAP, RAM	59
	REF	REF	REF	-	D	454485-1	HOUSING	58
								57
	1	1	1	-	B	458537-2	PAWL, FEED	56
	REF	REF	REF	-	B	240624-1	PIN, FEED FINGER	55
	REF	REF	REF	-	B	691499-1	SPRING, FEED FINGER	54
	REF	REF	REF	-	B	690541-1	HOLDER, FEED FINGER	53
	REF	REF	REF	-	A	455679-2	LEVER, TERMINAL FEED ARM	52
								51
								50
	1	-	-	-	B	690602-6	CAM, PRE-FEED 1 5/8 ST	49
	-	1	-	-	B	690602-5	CAM, PRE-FEED 1 1/8 ST	48
	-	-	1	-	B	690501-4	CAM, POST-FEED 1 5/8 ST	47
	1	1	1	-	B	459456-2	APPLICATOR, BASIC (SUBASSY)	46
	1	1	1	-	A	690191-1	PLUG, NYLON	45
	1	1	1	-	C	455673-1	RAM	44
	1	1	1	-	A	690125-1	WASHER, LAMINATED	43
	1	1	1	-	A	690124-7	WASHER, RAM	42
	1	1	1	-	A	7-21002-9	BOLT, CRIMPER(5/16x1.00)	41
								40
								39
	1	1	1	-	A	690223-2	SPACER, INSULATION DISC	38
	1	1	1	-	D	354777-1	WIRE DISC, PLASTIC	37
	1	1	1	-	A	22480-5	WASHER, SPRING	36
	1	1	1	-	B	690212-1	POST, RAM	35
								34
	REF	REF	REF	-	D	455675-1	PLATE, BASE	33
	1	1	1	-	A	690432-3	SCREW, ADJUSTMENT	32
								31
	REF	REF	REF	-	B	455689-1	BLOCK, STRIP GUIDE ADJ	30
	1	1	1	-	C	4-458144-5	PLATE, STRIP GUIDE	29
	1	1	1	-	C	2-455888-7	SPACER, FRONT SHEAR DEP	28
	2	2	2	-	A	1-22284-0	SPRING, DRAG	27
	1	1	1	-	B	240793-1	LEVER, DRAG RELEASE	26
	1	1	1	-	B	240792-1	DRAG, TERMINAL	25
	1	1	1	-	D	6-690504-1	GUIDE, STRIP (REAR)	24
	1	1	1	-	A	1-690438-0	GUIDE, STRIP (FRONT)	23
	-	-	1	-	B	690472-2	STRIPPER	22
	REF	REF	REF	-	A	4-22284-9	SPRING, FEED RETURN	21
	1	1	-	-	A	679218-1	STRIPPER WIRE STOP ASSY	20
	1	1	-	-	B	458949-1	STRIPPER	19
								18
								17
	1	1	1	-	B	318563-1	GUARD, CHIP, FRONT	16
△1	1	1	1	-	B	1-690691-0	PLATE, SHEAR (REAR)	15
	1	1	1	-	B	690462-1	HOLDER, SHEAR (REAR)	14
△1	1	1	1	-	C	690463-1	SHEAR, FLOAT (REAR)	13
	2	2	2	-	A	5-22280-0	SPRING, SHEAR	12
	2	2	2	-	B	690461-1	STOP, SHEAR	11
	1	1	1	-	C	690459-5	HOLDER, SHEAR (FRONT)	10
△1	1	1	1	-	C	454276-8	SHEAR, FLOAT (FRONT)	9
△1	1	1	1	-	C	6-805887-0	ANVIL	8
	1	1	1	-	C	7-240641-0	SPACER, DEPRESSOR (REAR)	7
	1	1	1	-	A	690468-1	DEPRESSOR, SHEAR (REAR)	6
	1	1	1	-	C	1-455889-4	DEPRESSOR, SHEAR (FRONT)	5
								4
								3
								2
△1	1	1	1	-	C	8-568176-3	CRIMPER, WIRE	1

← REVISION OF EACH ASSY NO (WHEN BLANK, USE DWG REVISION)

QTY REQD PER ASSY — PARTS LIST

P	F	LTR	REVISION RECORD	APP	DATE
		B	0150-0168-03	CE	FEB03
		A	REVISED	BH	6-02

DIMENSIONS IN INCHES. DO NOT SCALE PRINT. TOLERANCES UNLESS OTHERWISE SPECIFIED: 2 PLC DEC ±- 3 PLC DEC ±- 4 PLC DEC ±- ANGLES ± - SURF TEXTURE: √ REMOVE BURRS, BREAK SHARP EDGES R.015 MAX

MATL - - | HT TR - - | FIN - -

DR B.HIGMAN 06MAY02 | APP 06MAY02 T.ELBIN | CHK - - | REL - -

AMP — AMP Incorporated Harrisburg, PA 17105-3608

NAME SIDE FEED HDM APPLICATOR | MACHINE REF MINI APPL

SCALE - | D | DWG NO 1385417 | SHEET 1 OF 1 | REV B

CAGE CODE 00779 | CUSTOMER AND ASSEMBLY DRAWING | RESTRICTED TO -

LOC A | DIST 66

THIS DRAWING IS A CONTROLLED DOCUMENT.

THIS DRAWING IS UNPUBLISHED. © COPYRIGHT 2002 BY AMP INCORPORATED. ALL RIGHTS RESERVED. RELEASED FOR PUBLICATION ,2002 .

Mouser Electronics

Authorized Distributor

Click to View Pricing, Inventory, Delivery & Lifecycle Information:

TE Connectivity:

1385417-1