THIS DRAWING IS UNPUBLISHED. RELEASED FOR PUBLICATION -,- .
© COPYRIGHT - BY TYCO ELECTRONICS CORPORATION. ALL RIGHTS RESERVED.

LOC	DIST
AJ	16

REVISIONS

P	LTR	DESCRIPTION	DATE	DWN	APVD
	Z	REV PER ECO 08-009474	7/18/2008	DW	JL

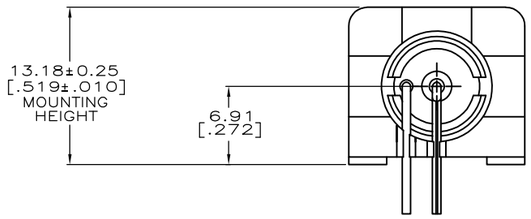

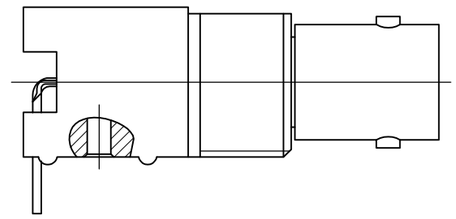

VIEW B
(SAME AS VIEW A
EXCEPT AS SHOWN)

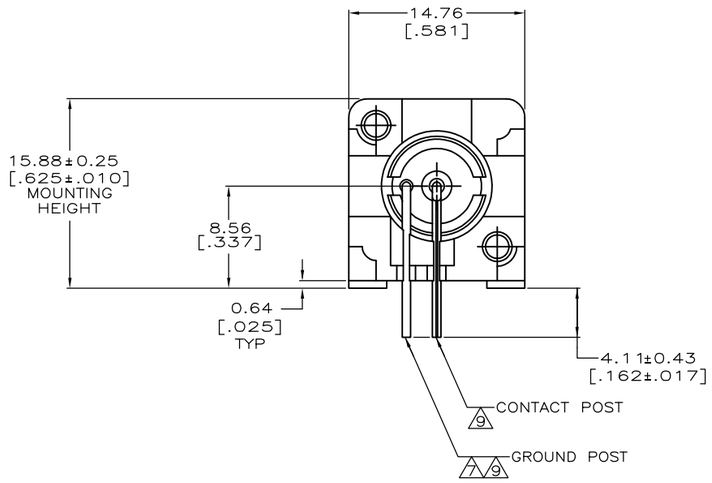

VIEW A

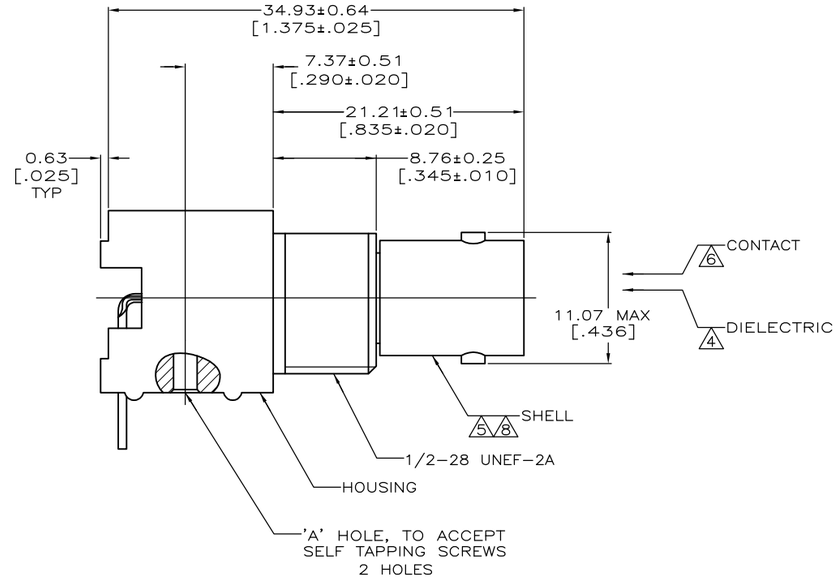

1. POLYESTER PBT PER MIL-M-24519, TYPE GPT-15F, UL94V-O RATED, COLOR:NATURAL
2. POLYESTER PBT PER MIL-M-24519, TYPE GPT-15F, UL94V-O RATED, COLOR:BLACK
3. POLYESTER PBT PER MIL-M-24519, TYPE GPT-15F, UL94V-O RATED, COLOR:BLUE
4. POLYMETHYLPENTENE, GENERAL PURPOSE.
5. ZINC PER QQ-Z-363.
6. PHOSPHOR BRONZE PER QQ-B-750.
7. BRASS PER ASTM-B-453.
8. NICKEL PLATE PER QQ-N-290, 3.81 µm [.000150] MINIMUM THICK.
9. TIN PLATE PER ASTM-B-545. 3.81 µm [.000150] MINIMUM THICK.
10. GOLD PLATE PER MIL-G-45204, 0.76 µm [.000030] MINIMUN THICK.
11. SILVER PLATE PER QQ-S-365, 2.54 µm [.000100] MINIMUN THICK.
12. SEE INSTRUCTION SHEET 2769.

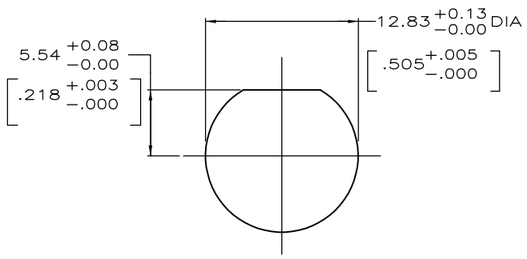

RECOMMENDED PANEL CUTOUT

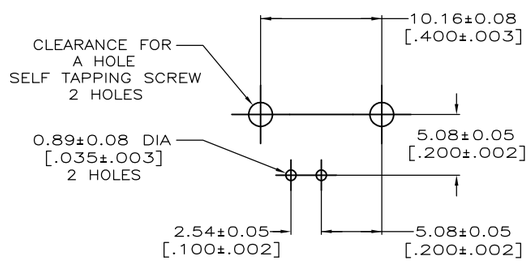

PCB CONFIGURATION

	VIEW	A HOLE	CONTACT PLATING	HOUSING MATERIAL	PART NUMBER
SUPERSEDED BY 226990-7	B	M2.6	10	3	226990-8
OBSOLETE	B	#2-56	9	1	226990-7
	A	#2-56	10	2	226990-6
SUPERSEDED BY 226990-3	A	#2-56	11	1	226990-5
SUPERSEDED BY 226990-6	A	#2-56	11	2	226990-4
	A	#2-56	10	1	226990-3
OBSOLETE	A	#2-56	9	2	226990-2
	A	#2-56	9	1	226990-1

THIS DRAWING IS A CONTROLLED DOCUMENT.

DIMENSIONS: mm [INCHES]

TOLERANCES UNLESS OTHERWISE SPECIFIED:
0 PLC ± –
1 PLC ± –
2 PLC ± 0.20 [.008]
3 PLC ± –
4 PLC ± –
ANGLES ± –

MATERIAL: 1 THRU 7
FINISH: 8 THRU 11

DWN B. SCOTT 04-30-91
CHK J. LIPPERT 08-06-91
APVD A. GABANY 08-06-91
PRODUCT SPEC 108-12078
APPLICATION SPEC –
WEIGHT –

CUSTOMER DRAWING

Tyco Electronics
Tyco Electronics Corporation
Harrisburg, Pa 17105-3608

NAME: JACK, PANEL, RIGHT ANGLE, 50 OHM, PCB, SERIES BNC

SIZE	CAGE CODE	DRAWING NO	RESTRICTED TO
A3	00779	C-226990	–

SCALE 4:1 SHEET 1 OF 1 REV Z

Mouser Electronics

Authorized Distributor

Click to View Pricing, Inventory, Delivery & Lifecycle Information:

TE Connectivity:

226990-3