THIS DRAWING IS UNPUBLISHED. RELEASED FOR PUBLICATION -,- .
© COPYRIGHT - BY TYCO ELECTRONICS CORPORATION. ALL RIGHTS RESERVED.

LOC	DIST
AA	00

REVISIONS

P	LTR	DESCRIPTION	DATE	DWN	APVD
	B	ECO-07-026027	12NOV07	LAM	PR

1. MATERIAL:
HOUSING - HTN NYLON, COLOR: BLACK
TERMINAL - 0.36[.014] THICK PHOS-BRONZE PLATED WITH 1.27µm[.000050] MINIMUM THICK HARD GOLD IN LOCALIZED GOLD PLATE AREA AND 3.81µm[.000150] MINIMUM THICK MATTE TIN IN SOLDER AREA OVER 1.27µm[.000050] THICK MINIMUM NICKEL UNDERPLATE.
SHIELD - 0.25[.010] THICK COPPER ALLOY PLATED WITH 3.0µm[.000120] MINIMUM REFLOWED TIN

2. CAVITY CONFORMS TO FCC RULES AND REGULATIONS, PART 68, SUBPART F

3. DIMENSION MEASURED ALONG FRONT EDGES OF MATING FACE

4. BULK PACKAGED IN A TRAY

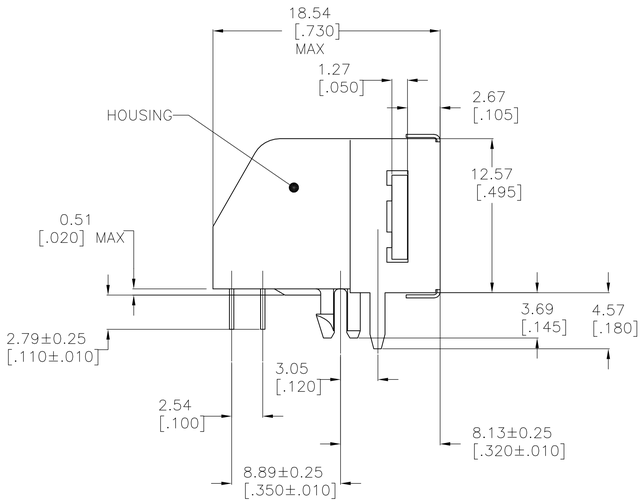

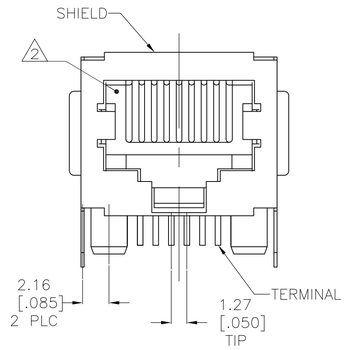

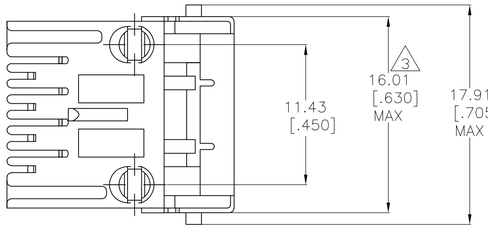

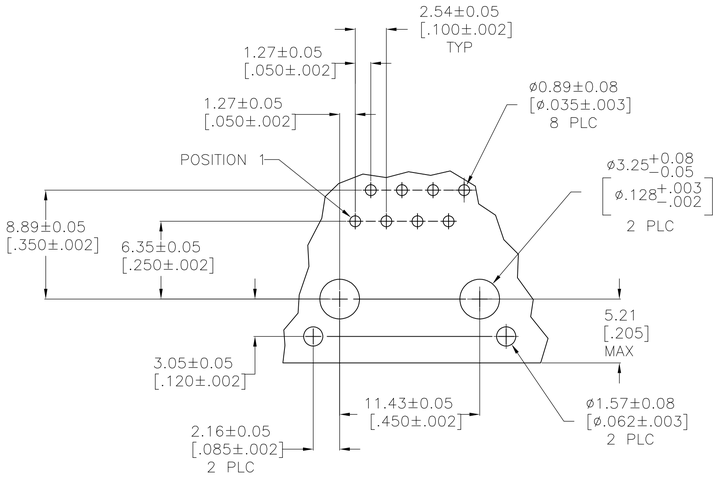

SUGGESTED PRINTED CIRCUIT BOARD LAYOUT (COMPONENT SIDE)

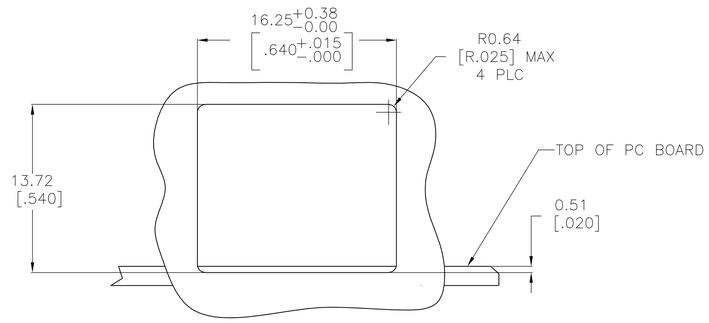

RECOMMENDED PANEL CUTOUT

5406429-1
PART NO.

THIS DRAWING IS A CONTROLLED DOCUMENT.	DWN 09JUN2005 J. ALCORTA - DOCK5	Tyco Electronics	Tyco Electronics Corporation Harrisburg, Pa 17105-3608
DIMENSIONS: mm [INCHES]	CHK 09JUN2005 J. WESTMAN		
TOLERANCES UNLESS OTHERWISE SPECIFIED: 0 PLC ± - 1 PLC ± - 2 PLC ± 0.13[.005] 3 PLC ± - 4 PLC ± - ANGLES ± -	APVD 09JUN2005 S. FLICKINGER	NAME	MODULAR JACK ASSEMBLY, 8 POSITION, SHIELDED, RIGHT ANGLE WITH PRINTED CIRCUIT BOARD GROUNDS AND PANEL STOPS
	PRODUCT SPEC 108-1163		
	APPLICATION SPEC 114-2048	SIZE A1	CAGE CODE 00779
MATERIAL SEE NOTE 1	FINISH SEE NOTE 1	WEIGHT -	DRAWING NO C-5406429
		CUSTOMER DRAWING	SCALE 4:1 SHEET 1 OF 1 REV B

RESTRICTED TO -

Mouser Electronics

Authorized Distributor

Click to View Pricing, Inventory, Delivery & Lifecycle Information:

TE Connectivity:
5406429-1