THIS DRAWING IS UNPUBLISHED. RELEASED FOR PUBLICATION 2018
© COPYRIGHT 2018 BY - TE CONNECTIVITY ALL RIGHTS RESERVED.

| REVISIONS | | | | | |
|---|---|---|---|---|---|
| P | LTR | DESCRIPTION | DATE | DWN | APVD |
| | F34 | REVISED PER ECO-17-007768 | 30MAY2017 | DLD | DCM |
| | F35 | REVISED PER ECO-17-014872 | 24OCT2017 | JMS | CM |
| | F36 | REVISED PER ECO-18-005691 | 16APR2018 | JMS | CM |
| | F37 | ECO-18-013134 | 13SEP2018 | KP | CM |

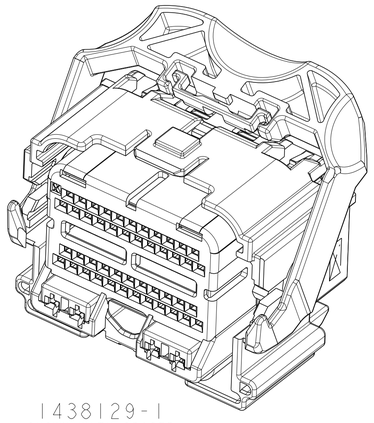

1438129-1
SHOWN WITH SPACER
IN SEATED POSITION

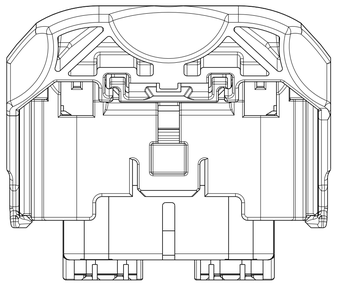

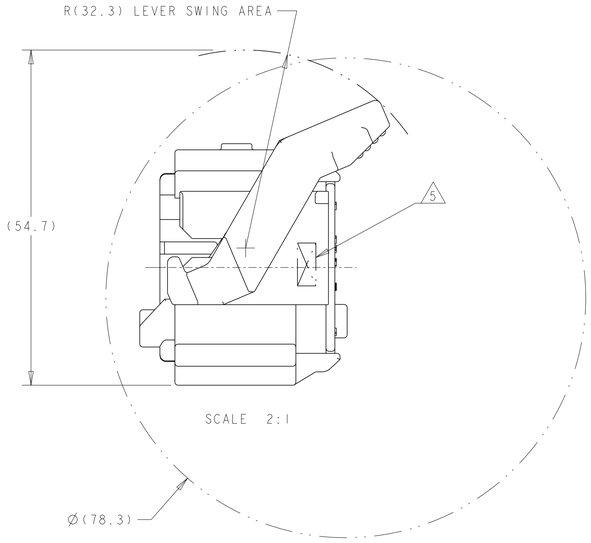


MIN. FEED THRU
CONDITION WITH 1mm
CLEARANCE ALL AROUND
SHOWN WITH SPACER IN SEATED POSITION

1. PRINT PART NUMBER (5S4T-14A464-L*-***, 5S4T-14A464-M*-***, 5S4T-14A464-N*-***) AND TRACEBILITY (YY : 2 DIGIT YEAR, JJJ = JULIAN DATE, HH = 2 DIGIT MILITARY HOUR CODE IN THE LOCATION AT ASSEMBLY. SEE SHEET 3 THRU 7 (-*) PART NUMBERS.
2. APPLICABLE MOLEX (1.5) POWER TERMINAL PART NUMBERS:
   33012-0002 TIN 0.50-1.50mm$^2$
3. CAM LEVER AND SPACER ARE SHIPPED IN THEIR PRE-ASSEMBLED POSITIONS.
4. REFERENCE TE CONNECTIVITY INSTRUCTION SHEET 408-8893.
5. COMPANY LOGO.

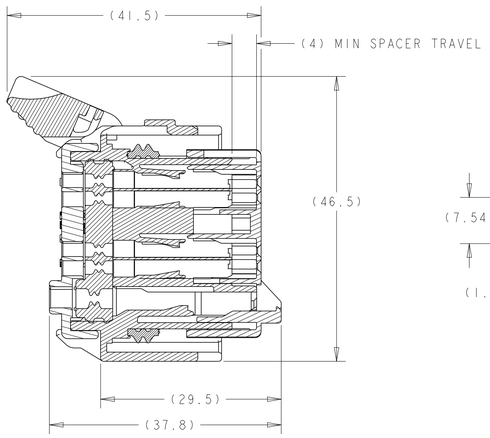


SECTION A-A
SPACER AND LEVER IN
PRE-SEATED POSITION
(DELIVERY CONDITION)

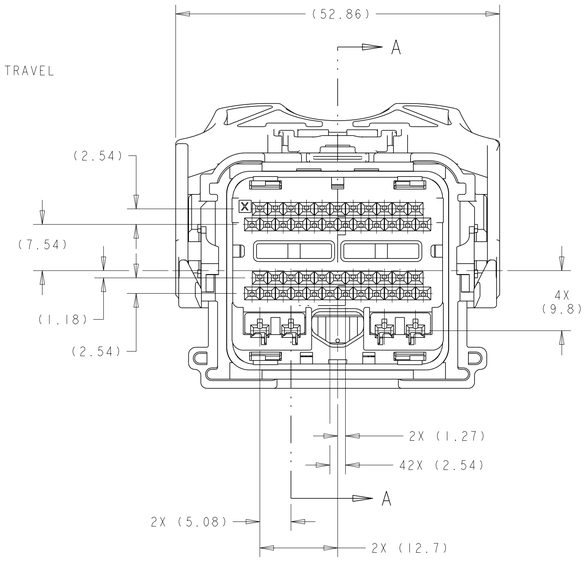


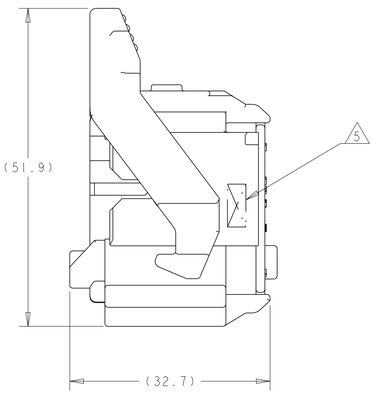


SHOWN WITH CAM
LEVER AND SPACER
IN LOADED POSITION

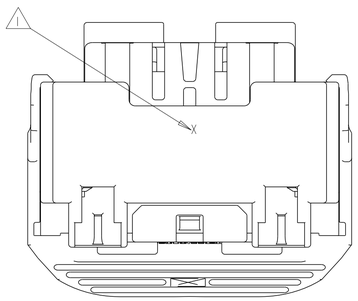


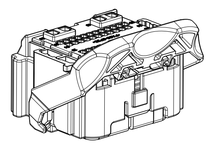

SCALE 1:1

| APPLICABLE COMPONENTS (FOR REFERENCE ONLY) | | | | | | |
|---|---|---|---|---|---|---|
| DESCRIPTION | NOMINAL TERMINAL SIZE | COLOR\ PLATING | FORD COMPONENT PART NUMBER | SUPPLIER PART NUMBER | MATERIAL/SPECIFICATION NUMBER | SAE WIRE SIZE |
| TERMINAL - FEMALE (Ag) | 0.64 (CAT. 0) | SILVER | 7S4T-14474-AA | 1393366-2 | COPPER ALLOY/SILVER PLATE | 20AWG |
| | | | | | | 18AWG |
| TERMINAL - FEMALE (Ag) | 0.64 (CAT. 0) | SILVER | 7S4T-14474-BA | 1393367-2 | COPPER ALLOY/SILVER PLATE | 22AWG |
| TERMINAL - FEMALE (Sn) | 0.64 (CAT. 0) | TIN | 1L2T-14474-AA | 1393366-1 | COPPER ALLOY/TIN PLATE | 20AWG |
| | | | | | | 18AWG |
| TERMINAL - FEMALE (Sn) | 0.64 (CAT. 0) | TIN | 1L2T-14474-BA | 1393367-1 | COPPER ALLOY/TIN PLATE | 22AWG |
| TERMINAL - FEMALE (Au) | 0.64 (CAT. 0) | GOLD | 1L2T-14474-CA | 1393365-1 | COPPER ALLOY/GOLD PLATE | 20AWG |
| | | | | | | 18AWG |
| TERMINAL - FEMALE (Au) | 0.64 (CAT. 0) | GOLD | 1L2T-14474-DA | 1393364-1 | COPPER ALLOY/GOLD PLATE | 22AWG |

**ANY DESIGN CHANGES ON THIS ASSEMBLY MAY ALSO BE REQUIRED ON ASSEMBLY DRAWING 1438691**

SEE TABLES
SHEETS 3 THRU 7
PART NUMBER

THIS DRAWING IS A CONTROLLED DOCUMENT.

DIMENSIONS: mm

TOLERANCES UNLESS OTHERWISE SPECIFIED:
0 PLC ±-
1 PLC ±0.3
2 PLC ±0.10
3 PLC ±-
4 PLC ±-
ANGLES ±1°

MATERIAL - -
FINISH - -

DWN R. VESTAL 15APR2005
CHK T. VALASEK 15APR2005
APVD T. VALASEK 15APR2005
PRODUCT SPEC -
APPLICATION SPEC -
WEIGHT -

TE Connectivity

NAME 50-WAY HARNESS ASSEMBLY, PCM -

SIZE A1 | CAGE CODE 00779 | DRAWING NO C-1438129 | RESTRICTED TO -

CUSTOMER DRAWING | SCALE 1:1 | SHEET 1 OF 10 | REV F37

4805 (3/13)

THIS DRAWING IS UNPUBLISHED. RELEASED FOR PUBLICATION 2018
© COPYRIGHT 2018 BY - TE CONNECTIVITY ALL RIGHTS RESERVED.

REVISIONS

| P | LTR | DESCRIPTION | DATE | DWN | APVD |
|---|---|---|---|---|---|
| | - | SEE SHEET 1 | - | - | - |

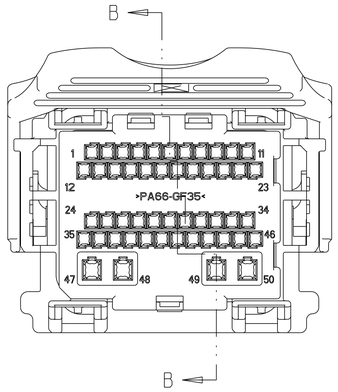


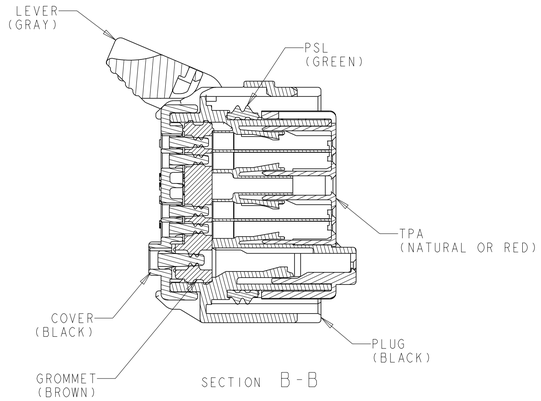


SECTION B-B

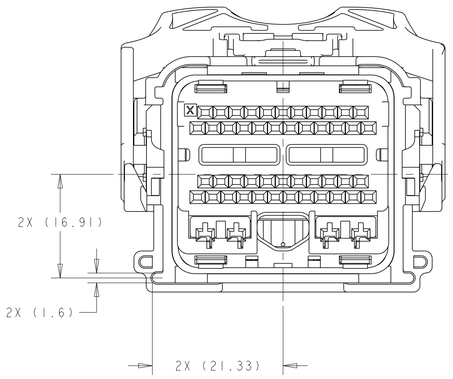


1438129-1
KEYING OPTION "A"

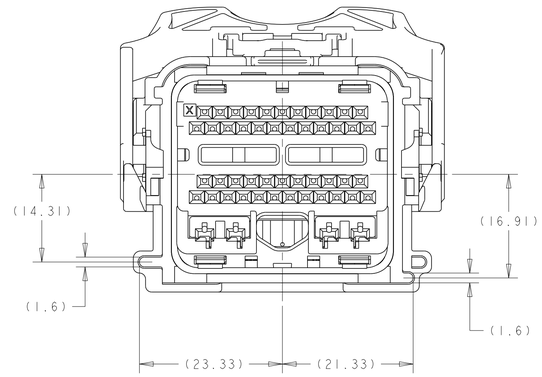


1438129-2
KEYING OPTION "B"

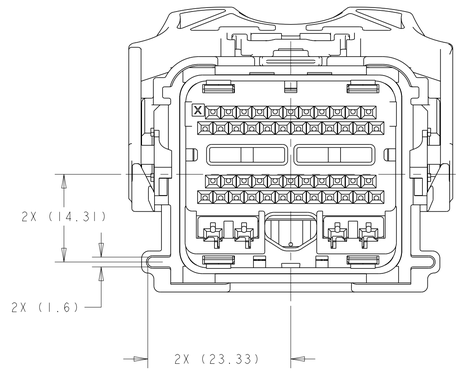


1438129-3
KEYING OPTION "C"

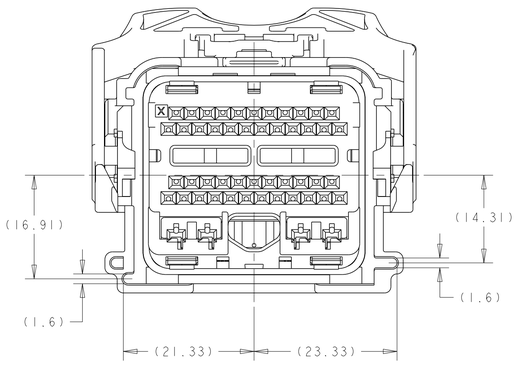


1438129-4
KEYING OPTION "D"

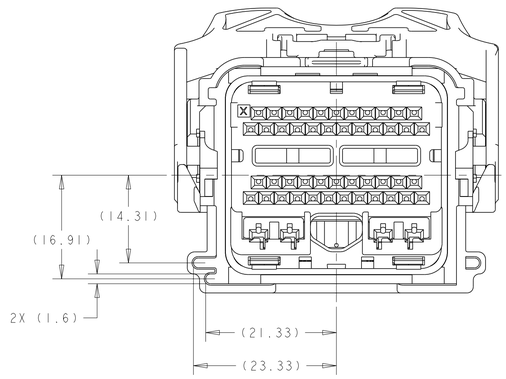


1438129-5
KEYING OPTION "E"

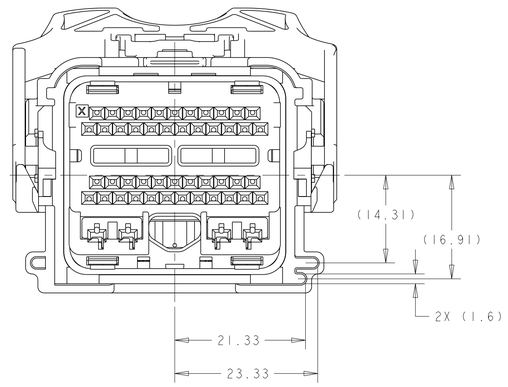


1438129-6
KEYING OPTION "F"

THIS DRAWING IS A CONTROLLED DOCUMENT.

DIMENSIONS: mm

TOLERANCES UNLESS OTHERWISE SPECIFIED:
0 PLC ±
1 PLC ±0.3
2 PLC ±0.10
3 PLC ±
4 PLC ±
ANGLES ±1°

MATERIAL - -
FINISH - -

DWN R. VESTAL 15APR2005
CHK T. VALASEK 15APR2005
APVD T. VALASEK 15APR2005
PRODUCT SPEC -
APPLICATION SPEC -
WEIGHT -

TE Connectivity

NAME 50-WAY HARNESS ASSEMBLY, PCM -

| SIZE | CAGE CODE | DRAWING NO | RESTRICTED TO |
|---|---|---|---|
| A1 | 00779 | C-1438129 | - |

CUSTOMER DRAWING | SCALE 2:1 | SHEET 2 OF 10 | REV F37

4805 (3/13)

THIS DRAWING IS UNPUBLISHED. RELEASED FOR PUBLICATION 2018
© COPYRIGHT 2018 BY - TE CONNECTIVITY ALL RIGHTS RESERVED.

REVISIONS

| P | LTR | DESCRIPTION | DATE | DWN | APVD |
|---|---|---|---|---|---|
| | - | SEE SHEET 1 | - | - | - |

KEYING OPTION A

| | 50 | 49 | 48 | 47 | 46 | 45 | 44 | 43 | 42 | 41 | 40 | 39 | 38 | 37 | 36 | 35 | 34 | 33 | 32 | 31 | 30 | 29 | 28 | 27 | 26 | 25 | 24 | 23 | 22 | 21 | 20 | 19 | 18 | 17 | 16 | 15 | 14 | 13 | 12 | 11 | 10 | 9 | 8 | 7 | 6 | 5 | 4 | 3 | 2 | 1 | | |
|---|---|---|---|---|---|---|---|---|---|---|---|---|---|---|---|---|---|---|---|---|---|---|---|---|---|---|---|---|---|---|---|---|---|---|---|---|---|---|---|---|---|---|---|---|---|---|---|---|---|---|---|---|
| 3-1924783-9 | | | | | | | | | | | | | | | | | | | | | | | | | | | | | | | | | | | | | | | | | | | | | | | | | | | | 5S4T-14A464-LA-999 |
| 8-1924783-0 | 50 | 49 | 48 | 47 | 46 | 45 | 44 | | | 41 | | | | | 36 | 35 | 34 | 33 | 32 | 31 | | | | 27 | 26 | 25 | 24 | | | | 20 | 19 | 18 | | 16 | 15 | | 13 | 12 | | 10 | | 8 | 7 | 6 | 5 | 4 | 3 | 2 | | 5S4T-14A464-LA-042 |
| 7-1924783-9 | | | | | 46 | 45 | | | | | 40 | 39 | 38 | | | 35 | | | 32 | | | | 28 | | 26 | 25 | 24 | | | | | 19 | 18 | 17 | 16 | | | | | 11 | | | | 7 | 6 | 5 | 4 | | | | 5S4T-14A464-LA-041 |
| 7-1924783-7 | 50 | 49 | 48 | 47 | 46 | 45 | 44 | | | 41 | | | | | 36 | 35 | 34 | 33 | 32 | 31 | | | | 27 | 26 | 25 | 24 | | | | 20 | 19 | 18 | | | 15 | | 13 | 12 | | 10 | | 8 | 7 | 6 | 5 | 4 | 3 | 2 | | 5S4T-14A464-LA-040 |
| 7-1924783-6 | | | | | | | | | | | | 39 | 38 | 37 | 36 | | | | | | | | 28 | | | | | | | | 20 | 19 | | | | | | | | | 10 | | 8 | 7 | 6 | 5 | | | | | 5S4T-14A464-LA-039 |
| 7-1924783-5 | | | | | 46 | | 44 | | | 41 | | | | | 36 | 35 | 34 | 33 | 32 | 31 | | | | 27 | 26 | 25 | 24 | | | | 20 | 19 | 18 | | | 15 | | 13 | 12 | | 10 | | 8 | 7 | 6 | 5 | 4 | 3 | 2 | | 5S4T-14A464-LA-038 |
| 7-1924783-3 | | | | | 46 | 45 | | | | 41 | | 39 | 38 | 37 | 36 | 35 | | | 32 | | | 29 | 28 | | 26 | 25 | 24 | 23 | | 21 | 20 | | 18 | 17 | 16 | | | | | 11 | 10 | 9 | | 7 | 6 | 5 | | | | | 5S4T-14A464-LA-037 |
| 7-1924783-1 | 50 | 49 | 48 | 47 | 46 | 45 | 44 | | | 41 | 40 | | | | 36 | 35 | 34 | 33 | 32 | 31 | | | | 27 | 26 | 25 | | | 22 | | | 19 | 18 | 17 | 16 | 15 | | 13 | 12 | | 10 | | 8 | 7 | 6 | 5 | 4 | 3 | 2 | | 5S4T-14A464-LA-036 |
| 6-1924783-9 | | | | | | | | | | | | 39 | 38 | 37 | 36 | | | | | | | | 28 | | 26 | 25 | | 23 | | | 20 | | | | | | | | | 11 | 10 | | 8 | | 6 | 5 | | | | | | 5S4T-14A464-LA-035 |
| 6-1924783-5 | 50 | 49 | 48 | 47 | 46 | 45 | 44 | | | 41 | 40 | | 38 | | 36 | | 34 | 33 | | 31 | | 29 | | 27 | 26 | 25 | 24 | | 22 | | 20 | | | 17 | | | | 13 | 12 | | 10 | | | 7 | 6 | 5 | 4 | 3 | | | 5S4T-14A464-LA-034 |
| 5-1924783-7 | | 49 | | 47 | | | | | | | | | | | 36 | | | | 32 | | | | | 27 | 26 | 25 | | 23 | 22 | 21 | | 19 | 18 | | | | | 13 | | 11 | | 9 | 8 | 7 | 6 | 5 | | | 2 | | 5S4T-14A464-LA-033 |
| 5-1924783-6 | | | 48 | | | | | | | | | | | | 36 | | | | 32 | | 30 | | | | | 25 | | 23 | 22 | 21 | | 19 | | | | | | 13 | | 11 | | 9 | 8 | 7 | 6 | 5 | | | 2 | | 5S4T-14A464-LA-032 |
| 5-1924783-0 | 50 | 49 | | 47 | 46 | 45 | 44 | | | 41 | 40 | | 38 | | 36 | | 34 | 33 | | 31 | | 29 | | 27 | 26 | 25 | 24 | | 22 | | 20 | | | 17 | | | | 13 | 12 | | | | | 7 | 6 | | 4 | 3 | 2 | | 5S4T-14A464-LA-031 |
| 4-1924783-6 | 50 | 49 | 48 | 47 | 46 | 45 | 44 | | | 41 | 40 | 39 | 38 | | 36 | | 34 | 33 | | 31 | | 29 | | 27 | 26 | 25 | 24 | | 22 | | 20 | | | 17 | | | | 13 | 12 | | 10 | | | 7 | 6 | 5 | 4 | 3 | 2 | | 5S4T-14A464-LA-030 |
| 4-1924783-2 | | | | | | | 44 | | | | | | | | | | | | | | | | | | | | | | | | | | | | | | | | | | | | | | 6 | | | | | | | 5S4T-14A464-LA-029 |
| 2-1924783-9 | 50 | 49 | 48 | 47 | 46 | 45 | 44 | | | 41 | 40 | | 38 | | 36 | | 34 | 33 | | 31 | | 29 | | 27 | 26 | 25 | 24 | | 22 | | 20 | | | 17 | | | | 13 | 12 | | 10 | | | 7 | 6 | 5 | 4 | 3 | 2 | | 5S4T-14A464-LA-028 |
| 2-1924783-3 | 50 | 49 | 48 | 47 | 46 | 45 | 44 | | | 41 | 40 | | 38 | | 36 | | 34 | 33 | | 31 | | 29 | | 27 | 26 | 25 | 24 | | | | 20 | | | 17 | | | | | | | 10 | | | | | 5 | 4 | 3 | 2 | | 5S4T-14A464-LA-027 |
| 1-1924783-5 | 50 | 49 | 48 | 47 | 46 | 45 | | 43 | | 41 | 40 | | 38 | | 36 | | 34 | 33 | 32 | 31 | | | | 27 | 26 | 25 | 24 | | | | 20 | 19 | 18 | 17 | | 15 | | | 12 | | 10 | | | | | 5 | 4 | 3 | 2 | 1 | 5S4T-14A464-LA-026 |
| 1924783-9 | 50 | 49 | 48 | 47 | 46 | 45 | 44 | 43 | | 41 | 40 | | 38 | | 36 | | 34 | 33 | 32 | 31 | | | | 27 | 26 | 25 | 24 | | | | 20 | 19 | 18 | 17 | | 15 | | | 12 | | 10 | | 8 | | | 5 | 4 | 3 | 2 | 1 | 5S4T-14A464-LA-025 |
| 1924783-6 | 50 | 49 | 48 | 47 | 46 | 45 | 44 | 43 | | 41 | 40 | | 38 | | 36 | | 34 | 33 | 32 | 31 | | | | 27 | 26 | 25 | 24 | | | | 20 | 19 | 18 | 17 | | 15 | | | 12 | | 10 | | 8 | | 6 | 5 | 4 | 3 | | 1 | 5S4T-14A464-LA-024 |
| 1924783-4 | | | | | | | | 43 | 42 | 41 | 40 | 39 | | | | 34 | 33 | 32 | 31 | 30 | 29 | 28 | | | | | | | | 21 | 20 | 19 | 18 | 17 | 16 | 15 | | | | | | 9 | 8 | 7 | 6 | 5 | 4 | | | | 5S4T-14A464-LA-023 |
| 3-1438950-2 | 50 | 49 | 48 | | 46 | | 44 | | 42 | | | | | 37 | 36 | | 34 | 33 | | 31 | 30 | | | | 26 | 25 | 24 | 23 | 22 | 21 | | | | | 16 | | | 13 | 12 | 11 | 10 | 9 | 8 | 7 | 6 | 5 | 4 | | 2 | 1 | 5S4T-14A464-LA-022 |
| 2-1438950-3 | | | | | 46 | | 44 | 43 | | | | 39 | 38 | | 36 | | | | | 31 | | 29 | 28 | | | 25 | | | 22 | 21 | | | | 18 | 17 | | | | 13 | | 11 | | | | | | | | | | | 5S4T-14A464-LA-021 |
| 2-1438950-2 | | | | | 46 | | 44 | 43 | | | | 39 | 38 | | 36 | | | | | 31 | | 29 | 28 | | | 25 | | | 22 | 21 | | | | 18 | 17 | | | | 13 | | 11 | | | | | | | | | 2 | | 5S4T-14A464-LA-020 |
| 1-1438950-9 | | | | | 46 | | 44 | 43 | | | | 39 | 38 | | 36 | | | | | 31 | | | 28 | | | 25 | | | 22 | 21 | | | | 18 | 17 | | | | 13 | | 11 | | | | | | | | | 2 | | 5S4T-14A464-LA-019 |
| 1438950-6 | | | 48 | 47 | 46 | | 44 | 43 | 42 | | | 39 | | | 36 | | | | | | | 29 | 28 | 27 | 26 | | | | 22 | 21 | | | | 18 | 17 | 16 | | | 13 | | 11 | 10 | 9 | 8 | 7 | 6 | | | | | | 5S4T-14A464-LA-018 |
| 9-1438129-8 | | | | | 46 | | | 43 | 42 | | | | | | | | | 33 | | | | | | 27 | | | | | | | | | | | | 15 | | 13 | | 11 | 10 | | | | | | | | | | | 5S4T-14A464-LA-017 |
| 8-1438129-9 | | | | | 46 | | 44 | 43 | | | | 39 | 38 | | 36 | | | | | 31 | | | | | | 25 | | | 22 | 21 | | | | 18 | 17 | | | | 13 | | 11 | | | | | | | | | 2 | | 5S4T-14A464-LA-016 |
| 8-1438129-5 | | | | | 46 | | | | | | | | | | | | | | | | | | 28 | 27 | | | | | 22 | 21 | | | | | 17 | 16 | 15 | | 13 | | | | | | | | | | | | | 5S4T-14A464-LA-015 |
| 8-1438129-3 | | | | | 46 | | 44 | 43 | 42 | | | 39 | 38 | | 36 | | | | | 31 | | | | | | 25 | | | 22 | 21 | | | | 18 | 17 | | | | 13 | | 11 | | | | | | | | | | | 5S4T-14A464-LA-014 |
| 7-1438129-8 | | | | | 46 | | 44 | 43 | 42 | | | | | | | | | | 32 | | | | 28 | 27 | 26 | | | 23 | 22 | 21 | 20 | | | 17 | 16 | | | | | | | | | | | 6 | | | | | | 5S4T-14A464-LA-013 |
| 7-1438129-7 | | | | | 46 | | 44 | 43 | 42 | | | | | | 36 | | | 33 | 32 | | | | 28 | 27 | 26 | | | 23 | 22 | 21 | 20 | | | 17 | 16 | | 14 | | | | | | | | | 6 | | | | | | 5S4T-14A464-LA-012 |
| 6-1438129-3 | | | | | 46 | | 44 | 43 | | | | 39 | 38 | | 36 | | | | | 31 | | | | | | 25 | | | 22 | 21 | | | | 18 | 17 | | | | 13 | | 11 | | | | | | | | | | | 5S4T-14A464-LA-011 |
| 6-1438129-0 | 50 | | | | | | 44 | 43 | 42 | | | 39 | 38 | | 36 | | | | | 31 | | | | | | 25 | | | 22 | 21 | | | | 18 | 17 | | | | 13 | | 11 | | | | | | | | | | | 5S4T-14A464-LA-010 |
| 4-1438129-6 | | | | | 46 | | | | | | | | | | | | | | | | | | 28 | 27 | 26 | | | | 22 | 21 | | | | | 17 | 16 | 15 | | 13 | | | | | | | | | | | | | 5S4T-14A464-LA-009 |
| 3-1438129-7 | | | | | | | 44 | 43 | | | | 39 | 38 | | 36 | | | | | 31 | | | | | | 25 | | | 22 | 21 | | | | 18 | 17 | | | | 13 | | 11 | | | | | | | | | | | 5S4T-14A464-LA-008 |
| 3-1438129-6 | 50 | | 48 | 47 | 46 | | 44 | 43 | 42 | | | | 38 | | 36 | | | | | 31 | | 29 | | 27 | 26 | | | | 22 | 21 | | | | 18 | 17 | | 15 | 14 | 13 | | | | | | | | | | | | | 5S4T-14A464-LA-007 |
| 3-1438129-5 | | | | | 46 | | | 43 | 42 | | | 39 | 38 | | | 35 | | 33 | | | | | 28 | 27 | 26 | | | | 22 | | | | | | 17 | 16 | 15 | | 13 | | 11 | 10 | | | | | | | | | | 5S4T-14A464-LA-006 |
| 2-1438129-4 | 50 | | 48 | 47 | 46 | | | 43 | 42 | | | | 38 | | 36 | | | | | 31 | | 29 | | 27 | 26 | | | | 22 | 21 | | | 18 | | | 15 | | 13 | | | | | | | | | | | | | | 5S4T-14A464-LA-005 |
| 2-1438129-0 | 50 | | | 47 | 46 | | | 43 | 42 | | | | 38 | | | | | 33 | 32 | 31 | | 29 | | | | | | | | | 20 | | 18 | 17 | | | 14 | | | 11 | 10 | 9 | 8 | | 6 | | | | | | 5S4T-14A464-LA-004 |
| 1438129-8 | | | | | 46 | | | 43 | 42 | | | | | | | | | 33 | | | | | 28 | 27 | | | | | 22 | | | | | | 17 | 16 | 15 | | | | 11 | 10 | | | | | | | | | | | 5S4T-14A464-LA-003 |
| 1438129-7 | | | | | 46 | | | 43 | 42 | | | 39 | 38 | | | 35 | | 33 | | | | | 28 | 27 | | | | | 22 | | | | | | 17 | 16 | 15 | | 13 | | 11 | 10 | | | | | | | | | | | 5S4T-14A464-LA-002 |
| 1-1438129-9 | | | | | 46 | | | | | | | | | | 36 | | | | | | | | 28 | 27 | 26 | | | | | | | | | | 17 | 16 | 15 | 14 | 13 | | | | | | | | | | | | | | 5S4T-14A464-LA-001 |
| 1438129-1 | | | | | | | | | | | | | | | | | | | | | | | | | | | | | | | | | | | | | | | | | | | | | | | | | | | | 5S4T-14A464-LA-000 |
| TERMINAL HOLE POSITION | 50 | 49 | 48 | 47 | 46 | 45 | 44 | 43 | 42 | 41 | 40 | 39 | 38 | 37 | 36 | 35 | 34 | 33 | 32 | 31 | 30 | 29 | 28 | 27 | 26 | 25 | 24 | 23 | 22 | 21 | 20 | 19 | 18 | 17 | 16 | 15 | 14 | 13 | 12 | 11 | 10 | 9 | 8 | 7 | 6 | 5 | 4 | 3 | 2 | 1 | | |

CAVITIES WITH A NUMERIC SYMBOL INDICATES CLOSED TERMINAL LOCATIONS

BLANK CAVITIES INDICATES OPEN TERMINAL HOLE LOCATIONS

ASSEMBLY PART NUMBER

FORD PART NUMBER

5S4T-14A464-L* PIN-OUT CHART

THIS DRAWING IS A CONTROLLED DOCUMENT.

DIMENSIONS: mm

TOLERANCES UNLESS OTHERWISE SPECIFIED:
0 PLC ±-
1 PLC ±0.3
2 PLC ±0.10
3 PLC ±-
4 PLC ±-
ANGLES. ±1°

MATERIAL - -

FINISH - -

DWN R. VESTAL 15APR2005
CHK T. VALASEK 15APR2005
APVD T. VALASEK 15APR2005

PRODUCT SPEC -

APPLICATION SPEC -

WEIGHT -

TE Connectivity

NAME 50-WAY HARNESS ASSEMBLY, PCM

SIZE A1 | CAGE CODE 00779 | DRAWING NO C-1438129 | RESTRICTED TO -

CUSTOMER DRAWING | SCALE 1:1 | SHEET 3 OF 10 | REV F37

4805 (3/13)

THIS DRAWING IS UNPUBLISHED. RELEASED FOR PUBLICATION 2018
© COPYRIGHT 2018 BY - TE CONNECTIVITY ALL RIGHTS RESERVED.

REVISIONS

| P | LTR | DESCRIPTION | DATE | DWN | APVD |
|---|---|---|---|---|---|
| | - | SEE SHEET 1 | - | - | - |

KEYING OPTION B

| | 50 | 49 | 48 | 47 | 46 | 45 | 44 | 43 | 42 | 41 | 40 | 39 | 38 | 37 | 36 | 35 | 34 | 33 | 32 | 31 | 30 | 29 | 28 | 27 | 26 | 25 | 24 | 23 | 22 | 21 | 20 | 19 | 18 | 17 | 16 | 15 | 14 | 13 | 12 | 11 | 10 | 9 | 8 | 7 | 6 | 5 | 4 | 3 | 2 | 1 | ASSEMBLY PART NUMBER | FORD PART NUMBER |
|---|---|---|---|---|---|---|---|---|---|---|---|---|---|---|---|---|---|---|---|---|---|---|---|---|---|---|---|---|---|---|---|---|---|---|---|---|---|---|---|---|---|---|---|---|---|---|---|---|---|---|---|---|
| | | | | | 46 | | | 43 | 42 | | | | | | | | | | | | | 29 | | 27 | 26 | 25 | 24 | | 22 | | | | | | | | | | | | | 9 | | 7 | | | | | | 1 | 5-1438950-9 | 5S4T-14A464-MA-065 |
| | | | | | 46 | | | | | | | | | | | | | | | | | | 28 | 27 | | | | | | | | | | | | | | 13 | | | | 9 | | | | | | | | 1 | 5-1438950-5 | 5S4T-14A464-MA-064 |
| | | | | | 46 | | | 43 | | | | 39 | 38 | 37 | | | 34 | | 32 | 31 | | 29 | | | | | 24 | | 22 | | 20 | | | | | 15 | 14 | | | | | | | | | | | | | | 5-1438950-4 | 5S4T-14A464-MA-063 |
| | | | | | 46 | | | 43 | | | | 39 | | 37 | | | 34 | | 32 | 31 | | 29 | | | | | 24 | | 22 | | 20 | | | | | 15 | | | | | | | | | | | | | | | 5-1438950-3 | 5S4T-14A464-MA-062 |
| | | | | | | | | 43 | | | | 39 | | 37 | | | 34 | | 32 | 31 | | 29 | | | | | | | | | 20 | | | | | 15 | | | | | | | | | | | | | | | 5-1438950-2 | 5S4T-14A464-MA-061 |
| | | | | | 46 | | | 43 | | | | 39 | | 37 | | | 34 | | 32 | 31 | | 29 | | | | | 24 | | 22 | | | | | | | 15 | | | | | | | | | | | | | 2 | | 5-1438950-1 | 5S4T-14A464-MA-060 |
| | | | | | 46 | | | 43 | | | | 39 | 38 | 37 | | | 34 | | 32 | 31 | | 29 | | | | | 24 | | 22 | | | | | | | 15 | 14 | | | | | | | | | | | | 2 | | 5-1438950-0 | 5S4T-14A464-MA-059 |
| | | | | | | | | 43 | | | | 39 | | 37 | | | 34 | | 32 | 31 | | 29 | | | | | | | | | | | | | | 15 | | | | | | | | | | | | | | | 4-1438950-9 | 5S4T-14A464-MA-058 |
| | | | | | | | | 43 | | | | 39 | | 37 | | | 34 | | 32 | 31 | 30 | 29 | | | | | | | | | 20 | 19 | | | | 15 | | | | | | | | | | | | | | | 4-1438950-8 | 5S4T-14A464-MA-057 |
| | | | | | | | | | 42 | | | | | | | | | | | 31 | | | | | | | | | | | | | | | 15 | 14 | | | | | | | 7 | | | | 3 | 2 | 1 | 4-1438950-7 | 5S4T-14A464-MA-056 |
| | | | | | 46 | | | 43 | 42 | | | 39 | 38 | 37 | | | | 33 | | 31 | | | | 27 | | 25 | | | 22 | | | | 18 | | 16 | | | | | | | 8 | 7 | | | | | 2 | | 4-1438950-3 | 5S4T-14A464-MA-055 |
| | | | | | 46 | | | | | | 40 | | | | | | | 33 | | | 30 | 29 | 28 | | | | 24 | | 22 | | | 19 | 18 | 17 | 16 | 15 | 14 | 13 | | | | 9 | | 7 | 6 | 5 | | | | 4-1438950-2 | 5S4T-14A464-MA-054 |
| | | | | | 46 | | | | | | | 39 | | 37 | | | 34 | | 32 | 31 | | 29 | | | | | 24 | | 22 | | | | | | | 15 | | | | | | | | | | | | | | | 4-1438950-0 | 5S4T-14A464-MA-053 |
| | | | | | 46 | | | | | | | 39 | 38 | 37 | | | 34 | | 32 | 31 | | 29 | | | | | 24 | | 22 | | | | | | | 15 | 14 | | | | | | | | | | | | | | 3-1438950-9 | 5S4T-14A464-MA-052 |
| | | | | | 46 | | | 43 | | | | 39 | 38 | 37 | | | | 33 | | | | | | 27 | | 25 | | | 22 | | | | 18 | | 16 | | | | | | | 8 | 7 | | | | | | | 3-1438950-6 | 5S4T-14A464-MA-051 |
| | | | | | | | | | | | | | | | | | | 33 | 32 | | | | | 27 | | | | | | | | | | | | | 13 | | | | 9 | | | | | | 3 | | 1 | 3-1438950-4 | 5S4T-14A464-MA-050 |
| | | | | | 46 | | | | 42 | | | | | 37 | | | | 33 | | 31 | 30 | 29 | 28 | | | | 24 | | 22 | | | 19 | 18 | 17 | 16 | | 14 | | | | | | | 6 | 5 | 4 | | | | 3-1438950-0 | 5S4T-14A464-MA-049 |
| | | | | | 46 | | | | 42 | | | | | 37 | | | | 33 | | 31 | 30 | 29 | 28 | | | | 24 | | 22 | | | 19 | 18 | 17 | 16 | | 14 | | | | | | 7 | 6 | 5 | 4 | | | | 2-1438950-9 | 5S4T-14A464-MA-048 |
| 50 | | | | | 46 | | | | 42 | | | | | 37 | | | | 33 | | 31 | 30 | 29 | 28 | 27 | | | 24 | | 22 | | | 19 | 18 | 17 | 16 | | 14 | | | | | | 7 | 6 | 5 | 4 | | | | 2-1438950-8 | 5S4T-14A464-MA-047 |
| | | | | | | | | 43 | | | | | 38 | | | | | | | | | | | 27 | | 25 | | | 22 | | | | 18 | | 16 | | | | | | | | | | | | | | 1 | 2-1438950-7 | 5S4T-14A464-MA-046 |
| 50 | 49 | | | | | | | | | | 40 | 39 | 38 | 37 | 36 | 35 | | 33 | 32 | 31 | 30 | | | | 26 | | | | 22 | 21 | 20 | 19 | 18 | | | | 14 | 13 | 12 | | 10 | 9 | 8 | 7 | 6 | 5 | | | 2 | 1 | 2-1438950-6 | 5S4T-14A464-MA-045 |
| 50 | 49 | | | | 46 | 45 | 44 | 43 | 42 | | 40 | 39 | 38 | 37 | 36 | 35 | 34 | 33 | 32 | 31 | 30 | 29 | 28 | 27 | 26 | | | 23 | 22 | | 20 | 19 | 18 | 17 | 16 | 15 | 14 | 13 | 12 | 11 | 10 | 9 | 8 | 7 | 6 | 5 | 4 | | 2 | 1 | 2-1438950-5 | 5S4T-14A464-MA-044 |
| | | | | | 46 | | | 43 | 42 | | | 39 | 38 | 37 | | | | 33 | 32 | 31 | 30 | | 28 | 27 | 26 | 25 | 24 | | 22 | | 20 | 19 | 18 | 17 | 16 | | | | | | | 9 | | | 6 | 5 | 4 | | | | 2-1438950-0 | 5S4T-14A464-MA-043 |
| | | | | | 46 | | | 43 | 42 | | | 39 | 38 | 37 | | | 34 | 33 | 32 | 31 | 30 | | 28 | 27 | 26 | 25 | 24 | | 22 | | 20 | 19 | 18 | 17 | 16 | | | | | | | 9 | | | 6 | 5 | 4 | | | | 1-1438950-8 | 5S4T-14A464-MA-042 |
| | | | | | 46 | | | 43 | 42 | | | | 38 | 37 | | | 34 | | 32 | 31 | 30 | 29 | 28 | 27 | 26 | 25 | 24 | | 22 | | 20 | 19 | 18 | 17 | 16 | | | | | | | 9 | | | 6 | 5 | 4 | | | | 1-1438950-7 | 5S4T-14A464-MA-041 |
| | | | | | | | | 43 | 42 | | | 39 | 38 | 37 | | | | 33 | 32 | 31 | 30 | | 28 | 27 | 26 | 25 | 24 | | 22 | | 20 | 19 | 18 | 17 | 16 | | | | | | | 9 | | | 6 | 5 | 4 | | | | 1-1438950-4 | 5S4T-14A464-MA-040 |
| | | | | | 46 | | | 43 | 42 | | | | 38 | 37 | | | | | 32 | 31 | 30 | 29 | 28 | 27 | 26 | 25 | 24 | | 22 | | 20 | 19 | 18 | 17 | 16 | | | | | | | 9 | | | 6 | 5 | 4 | | | | 1-1438950-3 | 5S4T-14A464-MA-039 |
| | | | | | 46 | | | | | 41 | | | | 37 | | | | 33 | | | 30 | 29 | 28 | | | | 24 | | 22 | | | 19 | 18 | 17 | 16 | | 14 | | | | | | | 6 | 5 | 4 | | | 1 | 1-1438950-0 | 5S4T-14A464-MA-038 |
| | | | | | 46 | | | | | | 40 | | | | | | | 33 | | | 30 | 29 | 28 | | | | 24 | | 22 | | | 19 | 18 | 17 | 16 | | 14 | 13 | | | | 9 | | 7 | 6 | 5 | | | | | 1438950-8 | 5S4T-14A464-MA-037 |
| | | | | | | | | 43 | | | | 39 | | | | | | 33 | | | | | | | | | | | | | 20 | | | | | 15 | | | | | | | | | | | | | | | 1438950-1 | 5S4T-14A464-MA-036 |
| | | | | | | | | 43 | | | | 39 | 38 | | | | 34 | 33 | 32 | | | | | | | | | | | | 20 | | | | | 15 | 14 | | | | | | | | | | | | | | 9-1438129-9 | 5S4T-14A464-MA-035 |
| | | | | | 46 | | | 43 | | | | 39 | | 37 | | | | 33 | | | | 29 | | 27 | | 25 | | | 22 | | 20 | | 18 | | 16 | 15 | | | | | | | 8 | | | | | | | 1 | 9-1438129-7 | 5S4T-14A464-MA-034 |
| | | | | | 46 | | | 43 | 42 | | | | 38 | 37 | | | | | 32 | 31 | 30 | | 28 | 27 | 26 | 25 | 24 | | 22 | | 20 | 19 | 18 | 17 | 16 | | | | | | | 9 | | | 6 | 5 | 4 | | | | 9-1438129-5 | 5S4T-14A464-MA-033 |
| | | | | | | | | | 42 | | | 39 | 38 | 37 | | | | 33 | | | | 29 | | | | | | | 22 | | | | 18 | | 16 | 15 | 14 | | | | | | 8 | | | | | | 2 | 1 | 9-1438129-4 | 5S4T-14A464-MA-032 |
| | | | | | | | | | 42 | | | 39 | 38 | | | | 34 | 33 | 32 | 31 | | | | 27 | 26 | 25 | | | | | 20 | | | | | | | | | | | | | 7 | | | | | | | 9-1438129-3 | 5S4T-14A464-MA-031 |
| | | | | | 46 | | | | | | | 39 | | 37 | | | 34 | | 32 | 31 | | 29 | | | | | 24 | | 22 | | | | | | | 15 | | | | | | | | | | | | | 2 | | 9-1438129-2 | 5S4T-14A464-MA-030 |
| | | | | | 46 | | | | | | | 39 | 38 | 37 | | | 34 | | 32 | 31 | | 29 | | | | | 24 | | 22 | | | | | | | 15 | 14 | | | | | | | | | | | | 2 | | 9-1438129-1 | 5S4T-14A464-MA-029 |
| | | | | | 46 | | | | 42 | | | 39 | | 37 | | | 34 | 33 | 32 | 31 | | 29 | | | 26 | | 24 | | 22 | | | | | | | 15 | | | | | | 9 | | 7 | | | | | 2 | | 9-1438129-0 | 5S4T-14A464-MA-028 |
| | | | | | | | | | | | | 39 | 38 | 37 | | | | 33 | | | | 29 | | | | | | | | | | | 18 | | 16 | 15 | 14 | | | | | | 8 | | | | | | | 1 | 8-1438129-8 | 5S4T-14A464-MA-027 |
| | | | | | 46 | | | | | | | | | | | | | | | | | | 28 | 27 | | | | | | | | | | | | | | 13 | | | | | | | | | | | | 1 | 8-1438129-0 | 5S4T-14A464-MA-026 |
| | | | | | 46 | | | 43 | 42 | 41 | 40 | 39 | 38 | 37 | | | 34 | | | 31 | 30 | 29 | 28 | 27 | 26 | 25 | | | 22 | | | 19 | | | | 15 | 14 | 13 | | | | 9 | | | | | | 3 | 2 | 1 | 7-1438129-9 | 5S4T-14A464-MA-025 |
| | | | | | 46 | | | | 42 | | | 39 | 38 | 37 | | | 34 | 33 | 32 | 31 | | 29 | | | 26 | | 24 | | 22 | | | | | | | 15 | 14 | | | | | 9 | | 7 | | | | | 2 | | 7-1438129-5 | 5S4T-14A464-MA-024 |
| | | | | | | | | | | | | 39 | | 37 | | | 34 | | 32 | 31 | 30 | 29 | | | | | | | | | 20 | 19 | | | | 15 | | | | | | | | | | | | | | | 7-1438129-4 | 5S4T-14A464-MA-023 |
| | | | | | | | | | 42 | | | 39 | 38 | | | | 34 | 33 | 32 | 31 | | | | | 26 | 25 | | | | | 20 | | | | | | | | | | | | | 7 | | | | | | | 7-1438129-3 | 5S4T-14A464-MA-022 |
| | | | | | | | | 43 | 42 | 41 | 40 | 39 | 38 | 37 | | | | 33 | | 31 | 30 | | | 27 | 26 | | 24 | | | | 20 | 19 | | | | 15 | 14 | 13 | | | | 9 | | 7 | | | | 3 | | | 7-1438129-1 | 5S4T-14A464-MA-021 |
| | | | | | | | | 43 | | | | 39 | | 37 | | | | 33 | | 31 | | | | 27 | | | 24 | | | | | | | | | 15 | | | | | | | | | | | | | | | 7-1438129-0 | 5S4T-14A464-MA-020 |
| | | | | | | | | 43 | | | | 39 | | 37 | | | 34 | 33 | 32 | 31 | | | | | | | | | | | | | | | | 15 | | | | | | | | | | | | | | | 6-1438129-9 | 5S4T-14A464-MA-019 |
| | | | | | | | | | 42 | | | 39 | 38 | | | | 34 | 33 | 32 | 31 | | | | | 26 | 25 | | | | | 20 | | 18 | | | | | | | | | | | 7 | | | | | | | 6-1438129-5 | 5S4T-14A464-MA-018 |
| | | | | | 46 | | | | 42 | | | 39 | 38 | 37 | | | 34 | 33 | 32 | 31 | | 29 | | | 26 | | | | 22 | | | | | | | 15 | 14 | | | | | 9 | | 7 | | | | | | | 6-1438129-2 | 5S4T-14A464-MA-017 |
| | | | | | | | | | | | | 39 | | 37 | | | 34 | | 32 | 31 | | 29 | | | | | | | | | | | | | | 15 | | | | | | | | | | | | | | | 6-1438129-1 | 5S4T-14A464-MA-016 |
| | | | | | | | | | 42 | | | 39 | | | | | | | | | | | | | | | | | 22 | | | | 18 | | 16 | | 14 | | | | | | | | | | | | 2 | 1 | 5-1438129-3 | 5S4T-14A464-MA-015 |
| | | | | | | | | | | | | 39 | | | | | | | | | | | | | | | | | | | | | 18 | | 16 | | 14 | | | | | | | | | | | | | 1 | 5-1438129-2 | 5S4T-14A464-MA-014 |
| | | | | | | | | | | | | 39 | 38 | 37 | | | | 33 | | | | 29 | | | | | | | | | | | 18 | | 16 | | 14 | | | | | | 8 | | | | | | | 1 | 5-1438129-0 | 5S4T-14A464-MA-013 |
| | | | | | | | | | | | | 39 | 38 | | | | | 33 | | | | 29 | | 27 | | | | | | | 20 | | 18 | | 16 | | 14 | | | | | | 8 | | | | | 3 | | 1 | 4-1438129-9 | 5S4T-14A464-MA-012 |
| | | | | | 46 | | | | | | | 39 | 38 | | | | | 33 | | | | 29 | | | | | | | 22 | | | | 18 | | | | | | | | | | | | | | | | | | 4-1438129-8 | 5S4T-14A464-MA-011 |
| | | | | | 46 | | | | | 41 | | 39 | 38 | 37 | | | 34 | | 32 | | | 29 | | | | 25 | | | 22 | | | | 18 | | 16 | 15 | 14 | | | | | 9 | | | | | | | 1 | 4-1438129-0 | 5S4T-14A464-MA-010 |
| | | | | | | | | | | | | | | | | | | | | | | | | | | | | | | | | | | | | | 14 | | | | | | | | | | | | | 3-1438129-8 | 5S4T-14A464-MA-009 |
| | | | | | 46 | | | | | 41 | | 39 | 38 | 37 | | | 34 | | 32 | | | 29 | | | 26 | 25 | | | 22 | | | | 18 | | 16 | 15 | 14 | | | | | 9 | | | | | | | 1 | 3-1438129-4 | 5S4T-14A464-MA-008 |
| | | | | | 46 | | | | | | | 39 | 38 | 37 | | | 34 | | 32 | | | 29 | | | 26 | 25 | 24 | | 22 | | | | 18 | | 16 | 15 | 14 | | | | | 9 | | | | | | | 1 | 3-1438129-2 | 5S4T-14A464-MA-007 |
| | 50 | | | | 46 | | | | | | | | | 37 | | | | 33 | | | 30 | 29 | 28 | 27 | | | 24 | | 22 | | | 19 | 18 | | 16 | | 14 | | | | | | | 7 | 6 | 5 | 4 | | | 1 | 2-1438129-6 | 5S4T-14A464-MA-006 |
| | | | | | 46 | | | | | | | | | 37 | | | | 33 | | | 30 | 29 | 28 | | | | 24 | | 22 | | | 19 | 18 | | 16 | | 14 | | | | | | | 7 | 6 | 5 | 4 | | | 1 | 2-1438129-5 | 5S4T-14A464-MA-005 |
| | 50 | | | | 46 | | | | | | | 39 | 38 | | | | | 33 | | | | 29 | | | | | | | 22 | | | | 18 | | | | | | | | | | | | | | | | | 1-1438129-1 | 5S4T-14A464-MA-004 |
| CAVITIES WITH A NUMERIC SYMBOL INDICATES CLOSED TERMINAL LOCATIONS | | | | | | | | | | | | | | | | | | | | | | | | | | | | | | | | | 18 | | | | | | | | | | | | | | | | | 1-1438129-0 | 5S4T-14A464-MA-003 |
| | | | | | | | | | | | | 39 | 38 | | | | | | | | | 29 | | 27 | | | 24 | | | | 20 | | 18 | | 16 | | 14 | | | | | 8 | | | | | 3 | | 1 | 1438129-9 | 5S4T-14A464-MA-002 |
| BLANK CAVITIES INDICATES OPEN TERMINAL HOLE LOCATIONS | | | | | 46 | | | | | 41 | 40 | | | 37 | | | | 33 | | | 30 | 29 | 28 | | | | 24 | | 22 | | | 19 | 18 | 17 | 16 | | 14 | | | | | | | 6 | 5 | 4 | | | 1 | 2-1438129-1 | 5S4T-14A464-MA-001 |
| | | | | | | | | | | | | | | | | | | | | | | | | | | | | | | | | | | | | | | | | | | | | | | | | | | 1438129-2 | 5S4T-14A464-MA-000 |
| TERMINAL HOLE POSITION | 50 | 49 | 48 | 47 | 46 | 45 | 44 | 43 | 42 | 41 | 40 | 39 | 38 | 37 | 36 | 35 | 34 | 33 | 32 | 31 | 30 | 29 | 28 | 27 | 26 | 25 | 24 | 23 | 22 | 21 | 20 | 19 | 18 | 17 | 16 | 15 | 14 | 13 | 12 | 11 | 10 | 9 | 8 | 7 | 6 | 5 | 4 | 3 | 2 | 1 | | |

5S4T-14A464-M* PIN-OUT CHART

THIS DRAWING IS A CONTROLLED DOCUMENT.

DIMENSIONS: mm

TOLERANCES UNLESS OTHERWISE SPECIFIED:
0 PLC ±-
1 PLC ±0.3
2 PLC ±0.10
3 PLC ±-
4 PLC ±-
ANGLES ±1°

MATERIAL - - -
FINISH - - -

DWN R. VESTAL 15APR2005
CHK T. VALASEK 15APR2005
APVD T. VALASEK 15APR2005
PRODUCT SPEC -
APPLICATION SPEC -
WEIGHT -

TE Connectivity

NAME 50-WAY HARNESS ASSEMBLY, PCM -

| SIZE | CAGE CODE | DRAWING NO | RESTRICTED TO |
|---|---|---|---|
| A1 | 00779 | C-1438129 | - |

CUSTOMER DRAWING SCALE 1:1 SHEET 4 OF 10 REV F37

4805 (3/13)

THIS DRAWING IS UNPUBLISHED. RELEASED FOR PUBLICATION 2018
© COPYRIGHT 2018 BY - TE CONNECTIVITY ALL RIGHTS RESERVED.

REVISIONS

| P | LTR | DESCRIPTION | DATE | DWN | APVD |
|---|---|---|---|---|---|
| | - | SEE SHEET 1 | - | - | - |

KEYING OPTION B

| | 50 | 49 | 48 | 47 | 46 | 45 | 44 | 43 | 42 | 41 | 40 | 39 | 38 | 37 | 36 | 35 | 34 | 33 | 32 | 31 | 30 | 29 | 28 | 27 | 26 | 25 | 24 | 23 | 22 | 21 | 20 | 19 | 18 | 17 | 16 | 15 | 14 | 13 | 12 | 11 | 10 | 9 | 8 | 7 | 6 | 5 | 4 | 3 | 2 | 1 | ASSEMBLY PART NUMBER | FORD PART NUMBER |
|---|---|---|---|---|---|---|---|---|---|---|---|---|---|---|---|---|---|---|---|---|---|---|---|---|---|---|---|---|---|---|---|---|---|---|---|---|---|---|---|---|---|---|---|---|---|---|---|---|---|---|---|---|
| | | | | | 46 | | | 43 | 42 | 41 | 40 | | 38 | 37 | | | 34 | 33 | 32 | 31 | 30 | 29 | 28 | 27 | 26 | 25 | 24 | | | | 20 | 19 | | 17 | 16 | 15 | 14 | 13 | | | | 9 | 8 | 7 | 6 | 5 | 4 | | | 1 | 6-1924783-8 | 5S4T-14A464-MA-094 |
| | | | | | 46 | | | 43 | | 41 | 40 | 39 | 38 | 37 | | | 34 | 33 | 32 | 31 | 30 | 29 | 28 | 27 | 26 | 25 | 24 | | 22 | | 20 | 19 | | 17 | 16 | 15 | 14 | | | | | 9 | 8 | 7 | | 5 | 4 | | 2 | 1 | 6-1924783-3 | 5S4T-14A464-MA-093 |
| | | | | | | | | | | | | | | | | | | 33 | 32 | | | | | 27 | | | | | | | | | | | | | | | | | | 9 | | | | | | 3 | | 1 | 4-1924783-3 | 5S4T-14A464-MA-092 |
| | | | | | | | | | 42 | | 40 | 39 | | | | | 34 | 33 | 32 | | | 29 | | | 26 | | | | | | 20 | | | | | 15 | | 13 | | | | 9 | | 7 | | | | 3 | | | 2-1924783-4 | 5S4T-14A464-MA-091 |
| | | | | | 46 | | | 43 | 42 | | | 39 | | | | | 34 | 33 | 32 | | | 29 | | | 26 | 25 | | | 22 | | | | | | | 15 | 14 | | | | | 9 | | 7 | | | | | | 1 | 2-1924783-2 | 5S4T-14A464-MA-090 |
| | | | | | | | | | 42 | | | 39 | | | | | 34 | 33 | | 31 | | | | 27 | | 25 | | | 22 | | 20 | | | | | | | | | | | | | | | | | | | | | 1-1924783-9 | 5S4T-14A464-MA-089 |
| | | | | | | | | | 42 | | | 39 | | | | | 34 | 33 | | 31 | | | | | | 25 | | | 22 | | 20 | | | | | | | | | | | | | | | | | | | | | 1-1924783-8 | 5S4T-14A464-MA-088 |
| | | | | | 46 | | | 43 | 42 | | | 39 | | | | | 34 | 33 | 32 | | | 29 | | | 26 | 25 | | | 22 | | | | | | | 15 | 14 | | | | | 9 | | 7 | | | | | | | 1-1924783-4 | 5S4T-14A464-MA-087 |
| | | | | | | | | 43 | | | | 39 | | | | | 34 | 33 | 32 | | | 29 | | | | | | | | | | | | | | 15 | 14 | | | | | | | | | | | | | | 1-1924783-3 | 5S4T-14A464-MA-086 |
| | | | | | | | | 43 | | 41 | 40 | 39 | 38 | 37 | | | 34 | | 32 | 31 | | 29 | | | | | | | | | 20 | | | | | 15 | 14 | 13 | | | | | | | | | | 3 | | | 1-1924783-2 | 5S4T-14A464-MA-085 |
| | | | | | | | | 43 | 42 | | | | 38 | | | | | | | 31 | | 29 | | 27 | | 25 | | | 22 | | 20 | | 18 | | 16 | 15 | | | | | | | | | | | | | | 1 | 1924783-8 | 5S4T-14A464-MA-084 |
| | | | | | | | | 43 | 42 | | | | 38 | | | | | | | 31 | | | | 27 | | 25 | | | 22 | | 20 | | 18 | | 16 | 15 | | | | | | | | | | | | | | 1 | 1924783-7 | 5S4T-14A464-MA-083 |
| | | | | | | | | 43 | 42 | | | | 38 | | | | | | | 31 | | 29 | | 27 | | 25 | | | 22 | | | | 18 | | 16 | 15 | | | | | | | | | | | | | | 1 | 1924783-3 | 5S4T-14A464-MA-082 |
| | | | | | | | | 43 | 42 | | | | 38 | | | | | | | 31 | | | | 27 | | 25 | | | 22 | | | | 18 | | 16 | 15 | | | | | | | | | | | | | | 1 | 1924783-2 | 5S4T-14A464-MA-081 |
| | | | | | 46 | | | | | | | | | | | | | | | | | | 28 | 27 | | | | | | | | | | | | | | | | | | 9 | | | | | | | | 1 | 9-1438950-9 | 5S4T-14A464-MA-080 |
| | | | | | | | | | 42 | | | 39 | | | | | 34 | 33 | 32 | 31 | | | | | 26 | 25 | | | | | 20 | | | | | | | | | | | | | | | | | | | | | 9-1438950-6 | 5S4T-14A464-MA-079 |
| | | | | | | | | | 42 | | | 39 | | | | | 34 | 33 | 32 | 31 | | | | 27 | 26 | 25 | | | | | 20 | | | | | | | | | | | | | | | | | | | | | 9-1438950-5 | 5S4T-14A464-MA-078 |
| | | | | | | | | 43 | | | | | | | | | 34 | 33 | 32 | | | 29 | | | | | | | | | | | | | | 15 | 14 | | | | | | | | | | | | | | | 9-1438950-4 | 5S4T-14A464-MA-077 |
| | | | | | 46 | | | | | | | | | | | | | | | | | | 28 | | | | | | | | | | | | | | | 13 | | | | 9 | | | | | | | | 1 | 9-1438950-1 | 5S4T-14A464-MA-076 |
| | | | | | 46 | | | 43 | 42 | | | 39 | 38 | 37 | | | | 33 | | 31 | | | | 27 | | 25 | | | 22 | | | | 18 | | 16 | | | | | | | | | 7 | | | | | 2 | 8-1438950-9 | 5S4T-14A464-MA-075 |
| | | | | | 46 | | | 43 | | | | 39 | 38 | 37 | | | | 33 | | | | | | 27 | | 25 | | | 22 | | | | 18 | | 16 | | | | | | | | | 7 | | | | | | 8-1438950-8 | 5S4T-14A464-MA-074 |
| | | | | | | 45 | 44 | | | | 40 | 39 | 38 | 37 | 36 | 35 | 34 | 33 | 32 | 31 | 30 | | 28 | 27 | 26 | 25 | 24 | 23 | | 21 | 20 | 19 | 18 | 17 | 16 | | | 13 | | | 10 | 9 | 8 | 7 | 6 | 5 | 4 | 3 | 2 | 1 | 8-1438950-7 | 5S4T-14A464-MA-073 |
| | | | | | | | | 43 | | | | 39 | 38 | | | | | 33 | | | 30 | | | | | | | | | | 20 | 19 | | | | 15 | 14 | 13 | | | | | | | | | | | | | 7-1438950-7 | 5S4T-14A464-MA-072 |
| | | | | | | | | 43 | | | | 39 | | | | | | 33 | | | 30 | | | | | | | | | | 20 | 19 | | | | 15 | | 13 | | | | | | | | | | | | | | 7-1438950-5 | 5S4T-14A464-MA-071 |
| | | | | | | | | 43 | | | | 39 | | | | | 34 | 33 | 32 | | | | | | | | | | | | 20 | | | | | 15 | | | | | | | | | | | | | | | | 7-1438950-4 | 5S4T-14A464-MA-070 |
| CAVITIES WITH A NUMERIC SYMBOL INDICATES CLOSED TERMINAL LOCATIONS | | | | | | | | | 42 | 41 | 40 | 39 | 38 | | | | 34 | 33 | 32 | | | 29 | | | 26 | | | | | | 20 | | | | | 15 | 14 | 13 | | | | 9 | | 7 | | | | 3 | | | 6-1438950-9 | 5S4T-14A464-MA-069 |
| | | | | | | | | 43 | | | | | 38 | | | | | | | | | 29 | | 27 | | 25 | | | 22 | | | | 18 | | 16 | | | | | | | | | | | | | | 1 | 6-1438950-5 | 5S4T-14A464-MA-068 |
| BLANK CAVITIES INDICATES OPEN TERMINAL HOLE LOCATIONS | 50 | | | | 46 | | | | 42 | | | | | 37 | | | | 33 | | 31 | 30 | 29 | 28 | 27 | | | 24 | | 22 | | | 19 | 18 | 17 | 16 | | 14 | | | | | | | 6 | 5 | | | | | 6-1438950-4 | 5S4T-14A464-MA-067 |
| | | | | | 46 | | | | 42 | | | | | 37 | | | | 33 | | 31 | 30 | 29 | 28 | | | | 24 | | 22 | | | 19 | 18 | 17 | 16 | | 14 | | | | | | | 6 | 5 | | | | | 6-1438950-3 | 5S4T-14A464-MA-066 |
| TERMINAL HOLE POSITION | 50 | 49 | 48 | 47 | 46 | 45 | 44 | 43 | 42 | 41 | 40 | 39 | 38 | 37 | 36 | 35 | 34 | 33 | 32 | 31 | 30 | 29 | 28 | 27 | 26 | 25 | 24 | 23 | 22 | 21 | 20 | 19 | 18 | 17 | 16 | 15 | 14 | 13 | 12 | 11 | 10 | 9 | 8 | 7 | 6 | 5 | 4 | 3 | 2 | 1 | | |

5S4T-14A464-M* PIN-OUT CHART

THIS DRAWING IS A CONTROLLED DOCUMENT.

DIMENSIONS: mm

TOLERANCES UNLESS OTHERWISE SPECIFIED:
0 PLC ±-
1 PLC ±0.3
2 PLC ±0.10
3 PLC ±-
4 PLC ±-
ANGLES ±1°

MATERIAL - -

FINISH - -

DWN B. VESTAL 15APR2005
CHK T. VALASEK 15APR2005
APVD T. VALASEK 15APR2005

PRODUCT SPEC -
APPLICATION SPEC -
WEIGHT -

TE Connectivity

NAME 50-WAY HARNESS ASSEMBLY, PCM

SIZE A1 | CAGE CODE 00779 | DRAWING NO C-1438129 | RESTRICTED TO -

CUSTOMER DRAWING | SCALE 1:1 | SHEET 5 OF 10 | REV F37

4805 (3/13)

THIS DRAWING IS UNPUBLISHED. RELEASED FOR PUBLICATION 2018
© COPYRIGHT 2018 BY - TE CONNECTIVITY ALL RIGHTS RESERVED.

| REVISIONS | | | | | |
|---|---|---|---|---|---|
| P | LTR | DESCRIPTION | DATE | DWN | APVD |
| | - | SEE SHEET 1 | - | - | - |

KEYING OPTION C

| TERMINAL HOLE POSITION | 50 | 49 | 48 | 47 | 46 | 45 | 44 | 43 | 42 | 41 | 40 | 39 | 38 | 37 | 36 | 35 | 34 | 33 | 32 | 31 | 30 | 29 | 28 | 27 | 26 | 25 | 24 | 23 | 22 | 21 | 20 | 19 | 18 | 17 | 16 | 15 | 14 | 13 | 12 | 11 | 10 | 9 | 8 | 7 | 6 | 5 | 4 | 3 | 2 | 1 | ASSEMBLY PART NUMBER | FORD PART NUMBER |
|---|---|---|---|---|---|---|---|---|---|---|---|---|---|---|---|---|---|---|---|---|---|---|---|---|---|---|---|---|---|---|---|---|---|---|---|---|---|---|---|---|---|---|---|---|---|---|---|---|---|---|---|---|
| |50|49|48|47|46|45|44|43|42|41||39|38|37|36|35||33|32|31|30||28|||25|24|23|22|21|20|19||||15|14|13|12|11||9|8|7|6|5|4|3||1|5-1438950-8|5S4T-14A464-NA-065|
| ||49|48|47|46||||42|||39|38||36||||32|31||28|27|26|25|24||22|21||||17||||13|12|||9||7|6|5||3|2|1|5-1438950-7|5S4T-14A464-NA-064|
| ||49|||46||||42|||39||37||35|34|||||||27||||23|22|||||16|15|||12|11|||8|7|6|5||3|2|1|5-1438950-6|5S4T-14A464-NA-063|
| |50|49||||45|44||||40||38|37|36|35|34|33|32|31|30||||26|||23|22|21|20|19|18||||14||12|11|10|9|8|7|6|5|4||2|1|4-1438950-6|5S4T-14A464-NA-062|
| ||49|48|47|46||||42|||39|38||36||||32|31||28|27|26||24||22|21||||17||||13|12|||9|||6|5||3|2|1|4-1438950-5|5S4T-14A464-NA-061|
| |50|49|48|47|46|45|44|43|42|41|40|39|38|37|36||||32|31|||28||||24||22|21||||17||||13|12|||9|||6|5||3|2|1|4-1438950-4|5S4T-14A464-NA-060|
| |50|49|48|||45|||||40|39|38|37|36|35||33|32|31|30||||26|25||23|22|21|20||18||||14|13|12||10||8|7|6|5|4|3|2|1|4-1438950-1|5S4T-14A464-NA-059|
| |50|49|48|47|46|45|44|43|42|41||39|38|37|36|35||33|32|31|30||28||||24|23|22|21|20|19||||15|14|13|12|11||9|8||6|5|4|3||1|3-1438950-8|5S4T-14A464-NA-058|
| ||49|48|47|46||||42|||39|38||36||||32|31||28|27|26||24||22|21||||17|||||12|||9||7|6|5||3|2|1|3-1438950-7|5S4T-14A464-NA-057|
| |50|49|||46|45|44|43|42||40|39|38|37|36|35|34|33|32|31|30|29|28|27|26|||23|22||20|19|18|17|16|15|14|13|12|11|10|9|8|7|6|5|4||2|1|3-1438950-5|5S4T-14A464-NA-056|
| |||||46|45||43|42|||39||37||35|34||32|31|30|29||27|||||22||20|19|||16|15|||||||||6|5||3||1|3-1438950-3|5S4T-14A464-NA-055|
| |50|49||||45|44||||40|39|38|37|36|35|34|33|32|31|30||28||26||||22|21|20|19|18|17|16||14|13|12||10|9|8|7|6|5||3|2|1|3-1438950-1|5S4T-14A464-NA-054|
| |50|49|||46|45|44|43|42||40|39|38|37|36|35|34|33|32|31|30|29|28|27|26|||23|22||20|19||17|16|15|14|13|12|11|10|9|8|7|6|5|4||2|1|2-1438950-4|5S4T-14A464-NA-053|
| |50|49||||45|44||||40|39|38|37|36|35|34|33||31|30||||26|||23|22|21|20|19|18||||14|13|12||10|9|8|7|6|5|4||2|1|2-1438950-1|5S4T-14A464-NA-052|
| |50|49|||||||||40|39|38|37|36|35|34|33|32|31|30||||26|||23|22|21|20|19|18||||14|13|12||10|9|8|7|6|5|||2|1|1-1438950-6|5S4T-14A464-NA-050|
| |50|49|||46|45|44|43|42||40|39|38|37|36|35|34|33|32|31|30|29|28|27|26|||23|22|21|20|19|18|17|16|15|14|13|12|11|10|9|8|7|6|5|4||2|1|1-1438950-5|5S4T-14A464-NA-049|
| |50|49|48||||||||40|39|38|37|36|35|34|33|32|31|30||||26|25||23|22|21|20|19|18||||14|13|12||10|9|8|7|6|5|||2|1|1-1438950-2|5S4T-14A464-NA-048|
| |50|49|48||46|45|44|43|42||40|39|38|37|36|35|34|33|32|31|30|29|28|27|26|25||23|22|21|20|19|18|17|16|15|14|13|12|11|10|9|8|7|6|5|4||2|1|1-1438950-1|5S4T-14A464-NA-047|
| ||||||45|44||||40||38|37|36|35|34|33|32|31|30||||26||||22|21|20||18||||14||||9|8|7|6|5|||||1438950-9|5S4T-14A464-NA-051|
| |50|49|48|||45|||||40|39|38|37|36|35||33|32|31|30||||26|25||23|22|21|20||18||||14|13|12||10||8|||5|4|3|2|1|1438950-7|5S4T-14A464-NA-046|
| |50|49|48||46||44||42||||37|36||34|33||31|30||||26|25|24|23|22|21|||||16|||13|12|11|10|9|8|7|6|5|4|3|2|1|1438950-5|5S4T-14A464-NA-045|
| |50|49|48||46||44||42||||37|36||34|33||31|30||||26|25|24|23|22|21|||||16|||13|12|11|10|9|8|7|6|5|4||2|1|1438950-4|5S4T-14A464-NA-044|
| |50|49|||46|45|44|43|42||40||38|37|36|35|34|||31|30||28|27|26|||23|22|21|20|19|18|17|16|15|14|13|12|11|10|9|8|7|6|5|4|3|2|1|1438950-3|5S4T-14A464-NA-043|
| |||||46|45|44|43|42||40||38|37|36|35|34|||31|30||28|27|26||||22|21|20||18|17|16||14||||9|8|7|6|5|||||1438950-2|5S4T-14A464-NA-042|
| |50|49|||46|45|44|43|42||40|39|38|37|36|35|34|33||31|30|29|28|27|26|||23|22|21|20||18|17|16|15|14|13|12|11|10|9|8|7|6|5|4|3|2|1|9-1438129-6|5S4T-14A464-NA-041|
| |50|||47|46|45|44||42|41|40|||||35|34|33||31|30|29|28|27|26|25|24|23|||||||16|||13||11|10|9|8|7|6|5|4|3|2||8-1438129-7|5S4T-14A464-NA-040|
| |50|49||||45|44||||40|39|||36|35|34||32|31|30||||26|||23|22|21|20||18||||14|13|12||10|9|8|7|6|5|4||2|1|8-1438129-6|5S4T-14A464-NA-039|
| |50|49|48|47|46|45|44|43|42|41|40|39|38|37|36|35|34|33|32|31|30|29|28|27|26|25|24|23|22|21|20|19|18|17|16|15|14|13|12|11|10|9|8|7|6|5|4|3|2|1|8-1438129-4|3S4T-14A464-GA|
| ||49|||46||44||42|||39||37||35|34|||||||27||||23|22|||||16|15||13|12|11|||8|7|6|5||3|2|1|8-1438129-2|5S4T-14A464-NA-037|
| |50|49|||46|45|44|43|42||40|39||37|36|35|34|33|32|||29|28|27||||23|22|21|20|19|18|17|16|15||13|12|11|||8|7||5||3|2|1|8-1438129-1|5S4T-14A464-NA-036|
| |50|49|||46|45|44|43|42||40|39|38|37|36|35|34|33|32|31||29|28|27|26|||23|22||20|19||17|16|15|14|13|12|11|10|9|8|7|6|5|4||2|1|7-1438129-6|5S4T-14A464-NA-035|
| |||||46|45|44|43|42||40||38|37|36|35|34|||31|30||28|27|26||||22|21|||18|17|16||14||||9|8|7|6|5|||||7-1438129-2|5S4T-14A464-NA-034|
| |50|49||||45|44||||40|39|38|37|36|35|34|33|32|31|30|||||||23|22|21|20|19|18||||||12|11|10|9|8|7|6|5|4||2|1|6-1438129-8|5S4T-14A464-NA-033|
| |50|49||||45|44||||40|39|38|37|36|35|34|33|32|31|30||||26|||23|22|21|20|19|18||||14||12|11|10|9|8|7|6|5|4||2|1|6-1438129-7|5S4T-14A464-NA-032|
| |||||46|45|44|43|42||40||38|37|36|35|34|||31|30||28|27|26||||22|21|||18|17|16||14||||9|8|7|||||||6-1438129-6|5S4T-14A464-NA-031|
| |50|49|48|47||45|||42|41|40||38|37|36|35||33|32|31|30||||26|25|24|||21|20|19|18||||14|13|12||10||8||6||||2|1|6-1438129-4|5S4T-14A464-NA-030|
| |50|49|||||||||40|39|38|37|36|35||33|32|31|30||||26||||22|21|20|19|18||||14|13|12||10|9|8|7|6|5|||2|1|5-1438129-9|5S4T-14A464-NA-029|
| |50|49|||46|45|44|43|42||40|39|38|37|36|35|34|33|32|31|30|29|28|27|26|||23|22|21|20||18|17|16|15|14|13|12|11|10|9|8|7|6|5|4|3|2|1|5-1438129-8|5S4T-14A464-NA-028|
| |50|49|||46|45|44|43|42||40|39|38|37|36|35|34|33|32|31|30|29|28|27|26|||23|22|21|20|19|18|17|16|15|14|13|12|11|10|9|8|7|6|5|4|3|2|1|5-1438129-7|5S4T-14A464-NA-027|
| |||||46|45|44|43|42||40||38|37|36|35|34|33|32|31|30||28|27|26||||22|21|20||18|17|16||14||||9|8|7|6|5|||||5-1438129-6|5S4T-14A464-NA-026|
| |||48|47|46|45|44|43|42||40||38|37|36|35|34|33|32|31|30||28|27|26|25|24||22|21|20||18|17|16||14||||9|8|7|6|5|||||5-1438129-5|5S4T-14A464-NA-025|
| |50|49||47||45|||42|41|40||38|37|36|35||33|32|31|30||||26|25|24|||21|20|19|18||||14|13|12||10||8||6||||2|1|5-1438129-4|5S4T-14A464-NA-024|
| |50|49|48|47|46|45|44||42|41|40|39|38|37|36|35|34|33|32|31|30|29|28|27|26|25|24|23|||20|19|18|17|16|15||13||11|10|9|8|7|6|5|4|3|2||5-1438129-1|5S4T-14A464-NA-023|
| |50|49||||45|44||||40||||||34|||||||||26|||23|||20||18||||14||||10|9|8|7|6|5|4||2|1|4-1438129-7|5S4T-14A464-NA-022|
| |50||48|47||45|44||42|41|40|||||35|34|33||31|30|29|28|27|26|25|24|23|||||||16|||13||11|10|||||5|4|3|2||4-1438129-5|5S4T-14A464-NA-021|
| |50|49|||46|45|44|43|42||40|39|38|37|36|35||33|32|31|30|29|28|27|26|||23|22|21|20|19|18|17|16|15|14|13|12|11|10|9|8|7|6||4|3|2|1|4-1438129-4|5S4T-14A464-NA-020|
| |50|49|48|47|46|45|44||42|41|40|39|38|37|36|35|34|33|32|31|30|29|28|27|26|25|24|23|||20|19||17|16|15|14|13||11|10|9|8|7|6|5|4|3|2||4-1438129-3|5S4T-14A464-NA-019|
| |50||48|47||45|44||42|41|40|||||35|34|33||31|30|29|28|27|26|25|24|23|||||||16|||13||11|10|||||5|4|3|2||4-1438129-2|5S4T-14A464-NA-018|
| |50||48|47||45|44||42|41|40|39|38|37|36|35|34|33|32|31|30|29|28|27|26|25|24|23|||20|19||17|16|15|14|13||11|10|||||5|4|3|2||4-1438129-1|5S4T-14A464-NA-017|
| |50|49||47||45|||42|41|40||38|37|36|35||33|32|31|30||||26|||||21|20|19|18||||14|13|12||10||8||6||||2|1|3-1438129-9|5S4T-14A464-NA-016|
| |50|49|||||||||40|39|38|37|36|35|34|33|32|31|30||||26|||23|22|21|20|19|||||14|13|12|11||9|8|7|6|5|||||3-1438129-3|5S4T-14A464-NA-015|
| |50|49|||46|45|44|43|42||40|39|38|37|36|35|34|33|32|31||29|28|27|26|||23|22||20|19|18|17|16|15|14|13|12|11|10|9|8|7|6|5|4||2|1|3-1438129-1|5S4T-14A464-NA-014|
| |50|49||||||43|||40|39|38|37|36|35|34|33|32|31|30||||26|||23|22|21|20|19|||||14|13|12|11||9|8|7|6|5|||||3-1438129-0|5S4T-14A464-NA-013|
| |50|49|48|||45|44||||40|39|38|37|36|35|34|33|32|31|30||28||26|25|||22|21|20|19|18|17|16||14|13|12||10|9|8|7|6|5||3|2|1|2-1438129-9|5S4T-14A464-NA-012|
| |50|49|48||46|45|44|43|42||40|39|38|37|36|35|34|33|32|31|30|29|28||26|25||23|22|21|20|19|18|17|16|15|14|13|12|11|10|9|8|7|6|5|4||2|1|2-1438129-8|5S4T-14A464-NA-011|
| |50|49|48|||45|44||||40|39|38|37|36|35|34|33|32|31|30|29|28||26|25|||22|21|20|19|18|17|16||14|13|12|11|10|9|8|7|6|5||3|2|1|2-1438129-7|5S4T-14A464-NA-010|
| |50|49|48|47||45|44|||41|40|39|38|37|36|35|34|33|32|31|30||28||26|25|24||22|21|20|19|18|17|16||14|13|12||10|9|8|7|6|5||3|2|1|2-1438129-3|5S4T-14A464-NA-009|
| |||||||||||39|38|37|36|35||33|32|31|30||||26||||22|21|20|19|18||||14|13|12||10|9|8|7|6||||2|1|1-1438129-8|5S4T-14A464-NA-008|
| |||||||||||39|38|37|36|35||33|32|31|30||||26||||22|21|||18||||14|13|12||10||||6||||2|1|1-1438129-7|5S4T-14A464-NA-007|
| |50|49|||||||||39|38|37|36|35||33|32|31|30||||26||||22|21|20|19|18||||14|13|12||10|9|8|7|6||||2|1|1-1438129-6|5S4T-14A464-NA-006|
| |50|||47|46|45|44||42|41|40|||||35|34|33||31|30|29|28|27|26|25|24|23||||||||13||11|10|9|||6|5|4|3|2||1-1438129-5|5S4T-14A464-NA-005|
| |50|||47||45|44||42|41|40|||||35|34|33||31|30|29|28|27|26|25|24|23|||||||16|||13||11|10|||||5|4|3|2||1-1438129-4|5S4T-14A464-NA-004|
| CAVITIES WITH A NUMERIC SYMBOL INDICATES CLOSED TERMINAL LOCATIONS |50|49|48|47|46|45|44||42|41|40|||||35|34|33||31|30|29|28|27|26|25|24|23|||||||16|||13||11|10|9|8|7|6|5|4|3|2||1-1438129-3|5S4T-14A464-NA-003|
| |50|49||||45|44|43|42||40|39|38|37|36|||33|32|31|30|29|28|27|26|||23|22|21|20|19|18|17|16|15|14|13|12|11|10|9|8|7|6||4|3|2|1|1-1438129-2|5S4T-14A464-NA-002|
| BLANK CAVITIES INDICATES OPEN TERMINAL HOLE LOCATIONS |50|49||||45|44|||41|40|39|38|37|36|35|34|33|32|31|30||28||26||||22|21|20|19|18|17|16||14|13|12||10|9|8|7|6|5||3|2|1|2-1438129-2|5S4T-14A464-NA-001|
| ||||||||||||||||||||||||||||||||||||||||||||||||||||1438129-3|5S4T-14A464-NA-000|

5S4T-14A464-N* PIN-OUT CHART

THIS DRAWING IS A CONTROLLED DOCUMENT.

DIMENSIONS: mm

TOLERANCES UNLESS OTHERWISE SPECIFIED:
0 PLC ±-
1 PLC ±0.3
2 PLC ±0.10
3 PLC ±-
4 PLC ±-
ANGLES ±1°

MATERIAL - -
FINISH - -

DWN R. VESTAL 15APR2005
CHK T. VALASEK 15APR2005
APVD T. VALASEK 15APR2005
PRODUCT SPEC -
APPLICATION SPEC -
WEIGHT -

TE Connectivity

NAME 50-WAY HARNESS ASSEMBLY, PCM
-

SIZE A1 | CAGE CODE 00779 | DRAWING NO C-1438129 | RESTRICTED TO -

CUSTOMER DRAWING | SCALE 1:1 | SHEET 6 OF 10 | REV F37

THIS DRAWING IS UNPUBLISHED. | RELEASED FOR PUBLICATION 2018
© COPYRIGHT 2018 BY - TE CONNECTIVITY | ALL RIGHTS RESERVED.

REVISIONS

| P | LTR | DESCRIPTION | DATE | DWN | APVD |
|---|---|---|---|---|---|
| | - | SEE SHEET 1 | - | - | - |

KEYING OPTION C

| | | | | | | | | | | | | | | | | | | | | | | | | | | | | | | | | | | | | | | | | | | | | | | | | | | | | |
|---|---|---|---|---|---|---|---|---|---|---|---|---|---|---|---|---|---|---|---|---|---|---|---|---|---|---|---|---|---|---|---|---|---|---|---|---|---|---|---|---|---|---|---|---|---|---|---|---|---|---|---|---|
| | | | | 47 | | | | | 42 | 41 | | | 38 | 37 | | 35 | | 33 | 32 | | 30 | | 28 | 27 | 26 | | 24 | 23 | 22 | 21 | 20 | | 18 | 17 | | 15 | 14 | 13 | 12 | | | 9 | 8 | 7 | 6 | 5 | 4 | 3 | 2 | | 6-1924783-7 | 5S4T-14A464-NA-131 |
| | 50 | | 48 | | 46 | 45 | 44 | 43 | 42 | | | | | 37 | 36 | | 34 | 33 | 32 | 31 | 30 | | | | | 25 | | 23 | 22 | | 20 | | | | | | | 13 | 12 | 11 | 10 | 9 | 8 | | 6 | 5 | | | 2 | 1 | 6-1924783-6 | 5S4T-14A464-NA-130 |
| | 50 | 49 | 48 | 47 | 46 | 45 | 44 | 43 | 42 | 41 | 40 | 39 | 38 | 37 | 36 | 35 | 34 | 33 | 32 | 31 | 30 | 29 | 28 | 27 | | 25 | 24 | 23 | 22 | 21 | 20 | 19 | 18 | 17 | 16 | 15 | | 13 | 12 | 11 | 10 | 9 | 8 | 7 | 6 | 5 | 4 | 3 | 2 | 1 | 6-1924783-4 | 5S4T-14A464-NA-129 |
| | | | | 47 | | | | | 42 | | | | 38 | 37 | | 35 | | 33 | 32 | 31 | | | 28 | | | | 24 | 23 | 22 | 21 | 20 | | 18 | | | 15 | 14 | 13 | 12 | | | 9 | 8 | 7 | 6 | 5 | 4 | 3 | 2 | | 6-1924783-2 | 5S4T-14A464-NA-128 |
| | 50 | | 48 | | 46 | 45 | 44 | 43 | 42 | 41 | | | | 37 | | | 34 | 33 | 32 | 31 | 30 | | | | | 25 | | 23 | 22 | | | | | | | | 14 | 13 | 12 | | 10 | 9 | 8 | | 6 | 5 | | 3 | | 1 | 6-1924783-1 | 5S4T-14A464-NA-127 |
| | | | 48 | | | | | | | | | | | | 36 | | | | 32 | 31 | 30 | | | | | 25 | | 23 | 22 | 21 | | 19 | | | | | | 13 | | 11 | | 9 | 8 | 7 | 6 | 5 | | | 2 | | 6-1924783-0 | 5S4T-14A464-NA-126 |
| | | 49 | | 47 | | | | | | | | | | | 36 | | | | 32 | | | | | 27 | | 25 | | 23 | 22 | 21 | | 19 | 18 | | | | | 13 | | 11 | | 9 | 8 | 7 | 6 | 5 | | | 2 | | 5-1924783-9 | 5S4T-14A464-NA-125 |
| | | | 48 | | | | | | | | | | | | 36 | | | | 32 | | 30 | | | | | 25 | | 23 | 22 | 21 | | 19 | | | | | | 13 | | 11 | | 9 | 8 | 7 | 6 | 5 | | | 2 | | 5-1924783-8 | 5S4T-14A464-NA-124 |
| | | | 48 | | | | | | 42 | | | | | 37 | 36 | | | 33 | 32 | 31 | 30 | | | | | 25 | | 23 | 22 | 21 | | 19 | | | | | | 13 | | | | 9 | 8 | 7 | 6 | 5 | | | 2 | | 5-1924783-5 | 5S4T-14A464-NA-123 |
| | | | | 47 | | | | | 42 | | | | 38 | 37 | | 35 | | 33 | 32 | 31 | 30 | | 28 | 27 | 26 | | 24 | 23 | 22 | 21 | 20 | | 18 | 17 | | 15 | 14 | 13 | 12 | | | 9 | 8 | 7 | 6 | 5 | 4 | 3 | 2 | | 5-1924783-4 | 5S4T-14A464-NA-122 |
| | | | 48 | 47 | | | | | 42 | | 40 | | 38 | 37 | | 35 | | 33 | 32 | | 30 | | 28 | 27 | 26 | | 24 | 23 | 22 | 21 | 20 | | 18 | 17 | | 15 | 14 | 13 | 12 | | | 9 | 8 | 7 | 6 | 5 | 4 | 3 | 2 | | 5-1924783-3 | 5S4T-14A464-NA-121 |
| | | 49 | | 47 | | | | | | | | | | 37 | 36 | | | 33 | 32 | 31 | | | | 27 | | 25 | | 23 | 22 | 21 | | 19 | 18 | | | | | 13 | | 11 | | 9 | 8 | 7 | 6 | 5 | | | 2 | | 5-1924783-2 | 5S4T-14A464-NA-120 |
| | | | | 47 | | | | | 42 | | | | 38 | 37 | | 35 | | 33 | 32 | | | | 28 | | | | 24 | 23 | 22 | 21 | 20 | | 18 | | | 15 | 14 | 13 | 12 | | | 9 | 8 | 7 | 6 | 5 | 4 | 3 | 2 | | 5-1924783-1 | 5S4T-14A464-NA-119 |
| | | | | 47 | | | | | 42 | | | 39 | 38 | 37 | | 35 | | 33 | 32 | 31 | | | 28 | | | | 24 | 23 | 22 | 21 | 20 | | 18 | | | 15 | 14 | 13 | 12 | | | 9 | 8 | 7 | 6 | 5 | 4 | 3 | 2 | | 4-1924783-9 | 5S4T-14A464-NA-118 |
| | | 49 | | | 46 | | | | | | | 39 | | | | 35 | | | | | | | | 27 | | | | 23 | 22 | | 20 | 19 | | | 16 | 15 | | | | 11 | | | 8 | 7 | 6 | 5 | | 3 | 2 | | 4-1924783-8 | 5S4T-14A464-NA-117 |
| | | | | 47 | | | | | 42 | | | 39 | 38 | 37 | | 35 | | | 32 | | | | 28 | | | | 24 | 23 | 22 | 21 | 20 | | 18 | | | 15 | 14 | 13 | 12 | | | 9 | 8 | 7 | 6 | 5 | 4 | 3 | 2 | | 4-1924783-7 | 5S4T-14A464-NA-116 |
| | | 49 | | | 46 | | | | | | | 39 | | | | 35 | | | | | | | | 27 | | | | 23 | 22 | | 20 | 19 | | | 16 | 15 | | | | 11 | | | 8 | 7 | 6 | 5 | | 3 | 2 | 1 | 4-1924783-5 | 5S4T-14A464-NA-115 |
| | | | | | 46 | 45 | | 43 | | | | 39 | | 37 | | 35 | | | | 31 | 30 | | 28 | 27 | | | | | 22 | | 20 | 19 | | | 16 | 15 | | | | | | | | 7 | 6 | 5 | | 3 | | | 4-1924783-4 | 5S4T-14A464-NA-114 |
| | | | | 47 | | | | | 42 | | | 39 | 38 | 37 | | 35 | | 33 | 32 | | | | 28 | | | | 24 | 23 | 22 | 21 | 20 | | 18 | | | 15 | 14 | 13 | 12 | | | 9 | 8 | 7 | 6 | 5 | 4 | 3 | 2 | | 4-1924783-1 | 5S4T-14A464-NA-113 |
| | | | | 47 | | | | | 42 | | | 39 | 38 | 37 | | 35 | 34 | 33 | 32 | | | | 28 | | | | 24 | 23 | 22 | 21 | 20 | | 18 | | | 15 | 14 | 13 | 12 | | | 9 | 8 | 7 | 6 | 5 | 4 | 3 | 2 | | 4-1924783-0 | 5S4T-14A464-NA-112 |
| | 50 | | | 47 | 46 | 45 | 44 | 43 | 42 | | | 39 | 38 | 37 | | 35 | 34 | 33 | 32 | 31 | 30 | | 28 | | | | 24 | 23 | 22 | 21 | 20 | 19 | 18 | | 16 | 15 | 14 | 13 | 12 | 11 | 10 | 9 | 8 | 7 | 6 | 5 | 4 | 3 | 2 | | 3-1924783-8 | 5S4T-14A464-NA-111 |
| | 50 | | 48 | | 46 | 45 | 44 | 43 | 42 | | | | | 37 | 36 | | 34 | 33 | 32 | 31 | 30 | | | | | 25 | | 23 | | | 20 | | | | | | | 13 | 12 | 11 | 10 | 9 | 8 | | 6 | 5 | | | 2 | 1 | 3-1924783-7 | 5S4T-14A464-NA-110 |
| | | | | 47 | | | | | 42 | | | | 38 | 37 | | 35 | | 33 | 32 | | 30 | | 28 | 27 | 26 | | 24 | 23 | 22 | 21 | 20 | | 18 | 17 | | 15 | 14 | 13 | 12 | | | 9 | 8 | 7 | 6 | 5 | 4 | 3 | 2 | | 3-1924783-6 | 5S4T-14A464-NA-109 |
| | 50 | | 48 | | 46 | 45 | 44 | 43 | 42 | 41 | | | | 37 | | | 34 | 33 | 32 | 31 | 30 | | | | | 25 | | 23 | 22 | | 20 | | | | | | 14 | 13 | 12 | | 10 | 9 | 8 | | 6 | 5 | | 3 | 2 | 1 | 3-1924783-5 | 5S4T-14A464-NA-108 |
| | 50 | | | 47 | 46 | 45 | 44 | | 42 | | | 39 | 38 | 37 | | 35 | 34 | 33 | 32 | 31 | 30 | | 28 | | | | 24 | 23 | 22 | 21 | 20 | 19 | 18 | | 16 | 15 | 14 | 13 | 12 | 11 | 10 | 9 | 8 | 7 | 6 | 5 | 4 | 3 | 2 | | 3-1924783-4 | 5S4T-14A464-NA-107 |
| | 50 | 49 | 48 | 47 | 46 | 45 | 44 | 43 | 42 | 41 | | 39 | 38 | 37 | 36 | 35 | | 33 | 32 | 31 | 30 | 29 | 28 | | | 25 | 24 | 23 | 22 | 21 | 20 | 19 | | | | 15 | 14 | 13 | 12 | 11 | 10 | 9 | 8 | 7 | 6 | 5 | 4 | 3 | | 1 | 3-1924783-3 | 5S4T-14A464-NA-106 |
| | | 49 | 48 | 47 | 46 | | | | 42 | | | 39 | 38 | | 36 | | | | 32 | 31 | | 29 | 28 | 27 | 26 | 25 | 24 | | 22 | 21 | | | | 17 | | | | 13 | 12 | | 10 | 9 | | 7 | 6 | 5 | | 3 | 2 | 1 | 3-1924783-2 | 5S4T-14A464-NA-105 |
| | 50 | 49 | 48 | 47 | 46 | | 44 | 43 | 42 | 41 | | 39 | | | 36 | 35 | 34 | 33 | 32 | 31 | | 29 | 28 | | | 25 | 24 | | | 21 | 20 | | | | | 15 | 14 | 13 | 12 | | 10 | 9 | 8 | 7 | 6 | 5 | 4 | 3 | | 1 | 3-1924783-1 | 5S4T-14A464-NA-104 |
| | | | 48 | | | | | | 42 | | | | | 37 | 36 | | | | 32 | 31 | 30 | | | | | 25 | | 23 | 22 | 21 | | 19 | | | | | | 13 | | | | 9 | 8 | 7 | 6 | 5 | | | 2 | | 3-1924783-0 | 5S4T-14A464-NA-103 |
| | 50 | | 48 | | 46 | 45 | 44 | 43 | 42 | 41 | | | 38 | 37 | 36 | | 34 | 33 | 32 | 31 | 30 | | | | | 25 | | 23 | 22 | | 20 | | | | | | 14 | 13 | 12 | 11 | 10 | 9 | 8 | | 6 | 5 | | 3 | 2 | 1 | 2-1924783-8 | 5S4T-14A464-NA-102 |
| | | 49 | | 47 | | | | | | | | | | | 36 | | | | 32 | 31 | | | | 27 | | 25 | | 23 | 22 | 21 | | 19 | 18 | | | | | 13 | | 11 | | 9 | 8 | 7 | 6 | 5 | | | 2 | | 2-1924783-7 | 5S4T-14A464-NA-101 |
| | | | 48 | | | | | | | | | | | 37 | 36 | | | | 32 | 31 | 30 | | | | | 25 | | 23 | 22 | 21 | | 19 | | | | | | 13 | | 11 | | 9 | 8 | 7 | 6 | 5 | | | 2 | | 2-1924783-6 | 5S4T-14A464-NA-100 |
| | | | 48 | 47 | 46 | 45 | | | 42 | | 40 | | 38 | 37 | 36 | 35 | 34 | 33 | 32 | 31 | 30 | | 28 | 27 | 26 | 25 | 24 | | 22 | 21 | 20 | | 18 | 17 | 16 | | 14 | | | | | 9 | 8 | 7 | 6 | 5 | | | | | 2-1924783-5 | 5S4T-14A464-NA-099 |
| | | | | 47 | | | | | 42 | | | | 38 | 37 | | 35 | | | 32 | 31 | 30 | | 28 | 27 | 26 | | 24 | 23 | 22 | 21 | 20 | | 18 | 17 | | 15 | 14 | 13 | 12 | | | 9 | 8 | 7 | 6 | 5 | 4 | 3 | 2 | | 2-1924783-1 | 5S4T-14A464-NA-098 |
| | | | | 47 | | | | | 42 | | | 39 | 38 | 37 | | 35 | | | 32 | | 30 | | | | | | 24 | 23 | 22 | 21 | 20 | | 18 | | | 15 | 14 | 13 | 12 | | | 9 | 8 | 7 | 6 | 5 | 4 | 3 | 2 | | 2-1924783-0 | 5S4T-14A464-NA-097 |
| | 50 | | 48 | 47 | 46 | 45 | 44 | 43 | | 41 | | 39 | 38 | 37 | | 35 | | 33 | 32 | 31 | 30 | | 28 | 27 | 26 | 25 | | 23 | 22 | | 20 | 19 | | 17 | | 15 | 14 | 13 | 12 | 11 | 10 | | 8 | 7 | | | 4 | | 2 | 1 | 1-1924783-7 | 5S4T-14A464-NA-096 |
| | | | | | 46 | 45 | | 43 | | | | 39 | | 37 | | 35 | | | 32 | 31 | 30 | 29 | | 27 | | | | | 22 | | 20 | 19 | | | 16 | 15 | | | | | | | | | 6 | 5 | | 3 | | 1 | 1-1924783-6 | 5S4T-14A464-NA-095 |
| | | 49 | 48 | | 46 | | | | | | | | 38 | 37 | 36 | | | | | | | 29 | 28 | 27 | 26 | 25 | 24 | 23 | 22 | 21 | 20 | | | 17 | | 15 | | 13 | | 11 | 10 | 9 | | 7 | 6 | 5 | 4 | 3 | 2 | | 1-1924783-1 | 5S4T-14A464-NA-094 |
| | 50 | | 48 | 47 | 46 | 45 | 44 | 43 | | 41 | | 39 | 38 | 37 | | 35 | | 33 | 32 | 31 | 30 | | 28 | 27 | 26 | 25 | | 23 | 22 | | 20 | 19 | | 17 | | 15 | 14 | 13 | | 11 | 10 | | 8 | 7 | | | 4 | | 2 | 1 | 1-1924783-0 | 5S4T-14A464-NA-093 |
| | 50 | | 48 | 47 | 46 | 45 | 44 | 43 | | 41 | | 39 | | 37 | | 35 | | 33 | 32 | 31 | 30 | | 28 | 27 | 26 | 25 | | 23 | 22 | | 20 | 19 | | 17 | | 15 | 14 | 13 | | 11 | 10 | | 8 | 7 | | | 4 | | 2 | 1 | 1924783-5 | 5S4T-14A464-NA-092 |
| | 50 | 49 | | | | 45 | 44 | 43 | 42 | | 40 | 39 | | 37 | 36 | 35 | 34 | 33 | 32 | | | 29 | 28 | 27 | | | | 23 | 22 | 21 | 20 | 19 | 18 | 17 | 16 | 15 | | 13 | 12 | 11 | | | 8 | 7 | | 5 | | 3 | 2 | 1 | 1924783-1 | 5S4T-14A464-NA-091 |
| | | | | | 46 | 45 | | 43 | 42 | | | 39 | | 37 | | 35 | 34 | | 32 | 31 | 30 | 29 | | 27 | | | | | 22 | | 20 | 19 | | | 16 | 15 | | | | | | | | | 6 | 5 | | 3 | | | 9-1438950-8 | 5S4T-14A464-NA-090 |
| | 50 | | | 47 | 46 | 45 | 44 | 43 | 42 | | | 39 | 38 | 37 | 36 | 35 | 34 | 33 | 32 | 31 | 30 | | 28 | 27 | 26 | 25 | 24 | 23 | 22 | 21 | 20 | 19 | 18 | 17 | 16 | 15 | 14 | 13 | 12 | 11 | 10 | 9 | 8 | 7 | 6 | 5 | 4 | 3 | 2 | 1 | 9-1438950-7 | 5S4T-14A464-NA-089 |
| | | 49 | 48 | | 46 | | | | | | | | 38 | 37 | 36 | | | | | | | 29 | 28 | 27 | 26 | | 24 | 23 | 22 | 21 | 20 | | 18 | 17 | 16 | 15 | | 13 | | 11 | 10 | 9 | | | 6 | 5 | 4 | 3 | 2 | | 9-1438950-3 | 5S4T-14A464-NA-088 |
| | | 49 | | | 46 | | | | | | | 39 | | 37 | | 35 | | | | | | | | 27 | | | | 23 | 22 | | | | | | 16 | 15 | | | | 11 | | | 8 | 7 | 6 | 5 | | 3 | 2 | | 9-1438950-2 | 5S4T-14A464-NA-087 |
| | 50 | 49 | | 47 | 46 | 45 | 44 | 43 | 42 | 41 | | 39 | 38 | 37 | 36 | 35 | 34 | 33 | 32 | 31 | 30 | 29 | 28 | 27 | 26 | 25 | 24 | 23 | 22 | 21 | | 19 | | 17 | | 15 | 14 | 13 | 12 | 11 | 10 | 9 | 8 | 7 | 6 | 5 | 4 | 3 | 2 | 1 | 9-1438950-0 | 5S4T-14A464-NA-086 |
| | | | 48 | | 46 | 45 | 44 | 43 | 42 | | | | 38 | 37 | 36 | 35 | 34 | 33 | 32 | 31 | 30 | | | 27 | 26 | 25 | | | 22 | 21 | 20 | | 18 | 17 | 16 | | 14 | | | | | 9 | 8 | 7 | 6 | 5 | | | | | 8-1438950-6 | 5S4T-14A464-NA-085 |
| | | | | | 46 | 45 | 44 | 43 | 42 | | | | 38 | 37 | 36 | 35 | 34 | 33 | 32 | 31 | 30 | | | 27 | 26 | | | | 22 | 21 | 20 | | 18 | 17 | 16 | | 14 | | | | | 9 | 8 | 7 | 6 | 5 | | | | | 8-1438950-5 | 5S4T-14A464-NA-084 |
| | | 49 | 48 | | 46 | | | | | | | | 38 | 37 | 36 | | | | | | | 29 | 28 | 27 | 26 | | 24 | 23 | 22 | 21 | 20 | 19 | 18 | 17 | 16 | 15 | | 13 | | 11 | 10 | 9 | | | 6 | 5 | 4 | 3 | 2 | | 8-1438950-4 | 5S4T-14A464-NA-083 |
| | 50 | 49 | | 47 | 46 | | 44 | 43 | 42 | 41 | | 39 | | | 36 | 35 | 34 | 33 | 32 | 31 | | 29 | 28 | | | 25 | 24 | | | 21 | | | | | | 15 | 14 | 13 | 12 | | 10 | 9 | 8 | 7 | 6 | 5 | 4 | 3 | | 1 | 8-1438950-3 | 5S4T-14A464-NA-082 |
| | | | 48 | 47 | | | | | 42 | | 40 | | 38 | 37 | | 35 | | | 32 | | 30 | | 28 | 27 | 26 | | 24 | 23 | 22 | 21 | 20 | | 18 | 17 | | 15 | 14 | 13 | 12 | | | 9 | 8 | 7 | 6 | 5 | 4 | 3 | 2 | | 8-1438950-2 | 5S4T-14A464-NA-081 |
| | 50 | | 48 | 47 | 46 | 45 | 44 | 43 | 42 | | 40 | 39 | 38 | 37 | 36 | 35 | 34 | 33 | 32 | 31 | 30 | | 28 | | | 25 | 24 | 23 | 22 | 21 | 20 | 19 | 18 | 17 | 16 | 15 | 14 | 13 | 12 | 11 | 10 | 9 | 8 | 7 | 6 | 5 | 4 | | 2 | 1 | 8-1438950-1 | 5S4T-14A464-NA-080 |
| | | | | 47 | | | | | 42 | | | | 38 | 37 | | 35 | | | 32 | | 30 | | 28 | 27 | 26 | | 24 | 23 | 22 | 21 | 20 | | 18 | 17 | | 15 | 14 | 13 | 12 | | | 9 | 8 | 7 | 6 | 5 | 4 | 3 | 2 | | 8-1438950-0 | 5S4T-14A464-NA-079 |
| | 50 | 49 | 48 | | 46 | | | | | | | | | 37 | 36 | | 34 | 33 | | 31 | 30 | | | | 26 | 25 | 24 | 23 | 22 | 21 | | | | | 16 | | | 13 | 12 | 11 | 10 | 9 | 8 | 7 | 6 | 5 | 4 | | 2 | 1 | 7-1438950-9 | 5S4T-14A464-NA-078 |
| | 50 | | 48 | 47 | 46 | 45 | 44 | 43 | | 41 | | 39 | | 37 | | 35 | | 33 | 32 | 31 | 30 | | | 27 | 26 | 25 | | 23 | 22 | | 20 | 19 | | 17 | | 15 | 14 | 13 | | 11 | 10 | | 8 | 7 | | | 4 | | 2 | 1 | 7-1438950-8 | 5S4T-14A464-NA-077 |
| | | 49 | 48 | | 46 | | | | 42 | | | 39 | 38 | | 36 | | | | 32 | 31 | | | 28 | 27 | 26 | 25 | 24 | | 22 | 21 | | | | 17 | | | | 13 | 12 | | 10 | 9 | | 7 | 6 | 5 | | 3 | 2 | 1 | 7-1438950-6 | 5S4T-14A464-NA-076 |
| | 50 | 49 | 48 | 47 | 46 | 45 | | | 42 | 41 | 40 | 39 | 38 | 37 | 36 | 35 | 34 | 33 | 32 | 31 | 30 | 29 | 28 | 27 | 26 | 25 | 24 | 23 | 22 | 21 | 20 | 19 | 18 | 17 | 16 | 15 | 14 | 13 | 12 | 11 | 10 | 9 | 8 | 7 | 6 | 5 | 4 | 3 | 2 | 1 | 7-1438950-3 | 5S4T-14A464-NA-075 |
| | 50 | | 48 | 47 | 46 | 45 | 44 | 43 | | 41 | | 39 | 38 | 37 | | 35 | | 33 | 32 | 31 | 30 | | | 27 | 26 | 25 | | 23 | 22 | | 20 | 19 | | 17 | | 15 | 14 | 13 | | 11 | | | 8 | 7 | | | 4 | | 2 | 1 | 7-1438950-2 | 5S4T-14A464-NA-074 |
| | | | 48 | 47 | | | | | 42 | | 40 | | 38 | 37 | | 35 | | | 32 | | 30 | | 28 | 27 | 26 | | 24 | 23 | 22 | 21 | 20 | | 18 | 17 | | 15 | 14 | 13 | 12 | | | 9 | 8 | | 6 | 5 | 4 | 3 | 2 | | 7-1438950-1 | 5S4T-14A464-NA-073 |
| | | | | 47 | | | | | 42 | | | | 38 | 37 | | 35 | | | 32 | | 30 | | 28 | 27 | 26 | | 24 | 23 | 22 | 21 | 20 | | 18 | 17 | | 15 | 14 | 13 | 12 | | | 9 | 8 | | 6 | 5 | 4 | 3 | 2 | | 7-1438950-0 | 5S4T-14A464-NA-072 |
| | | | | | 46 | 45 | | | 42 | | 40 | | 38 | 37 | 36 | 35 | 34 | | | 31 | 30 | | 28 | 27 | 26 | | | | 22 | 21 | 20 | | 18 | 17 | 16 | | 14 | | | | | 9 | 8 | 7 | 6 | 5 | | | | | 6-1438950-8 | 5S4T-14A464-NA-071 |
| | 50 | 49 | | | 46 | 45 | | | 42 | | 40 | | 38 | 37 | 36 | 35 | 34 | | | 31 | 30 | 29 | 28 | 27 | 26 | | | 23 | 22 | 21 | 20 | 19 | 18 | 17 | 16 | 15 | 14 | 13 | 12 | 11 | 10 | 9 | 8 | 7 | 6 | 5 | 4 | 3 | 2 | 1 | 6-1438950-7 | 5S4T-14A464-NA-070 |
| CAVITIES WITH A NUMERIC SYMBOL INDICATES CLOSED TERMINAL LOCATIONS | 50 | | 48 | 47 | 46 | 45 | 44 | 43 | | 41 | | 39 | 38 | 37 | | 35 | | 33 | 32 | 31 | 30 | | 28 | 27 | 26 | 25 | | 23 | 22 | | 20 | 19 | | 17 | | 15 | 14 | 13 | 12 | 11 | 10 | | 8 | 7 | | | 4 | | 2 | 1 | 6-1438950-6 | 5S4T-14A464-NA-069 |
| | | 49 | 48 | 47 | 46 | | | | 42 | | | 39 | 38 | | 36 | | 34 | | 32 | 31 | | | 28 | 27 | 26 | 25 | 24 | | 22 | 21 | | | | 17 | | | | 13 | 12 | | | 9 | | 7 | 6 | 5 | | 3 | 2 | 1 | 6-1438950-2 | 5S4T-14A464-NA-068 |
| BLANK CAVITIES INDICATES OPEN TERMINAL HOLE LOCATIONS | 50 | 49 | 48 | 47 | 46 | 45 | 44 | 43 | 42 | 41 | | 39 | 38 | 37 | 36 | 35 | | 33 | 32 | 31 | 30 | | 28 | | | 25 | 24 | 23 | 22 | 21 | 20 | 19 | | 17 | | 15 | 14 | 13 | 12 | 11 | | 9 | 8 | 7 | 6 | 5 | 4 | 3 | | 1 | 6-1438950-1 | 5S4T-14A464-NA-067 |
| | 50 | 49 | 48 | 47 | 46 | 45 | 44 | 43 | 42 | 41 | | 39 | 38 | 37 | 36 | 35 | | 33 | 32 | 31 | 30 | | 28 | | | | 24 | 23 | 22 | 21 | 20 | 19 | | 17 | | 15 | 14 | 13 | 12 | 11 | | 9 | 8 | | 6 | 5 | 4 | 3 | | 1 | 6-1438950-0 | 5S4T-14A464-NA-066 |
| TERMINAL HOLE POSITION | 50 | 49 | 48 | 47 | 46 | 45 | 44 | 43 | 42 | 41 | 40 | 39 | 38 | 37 | 36 | 35 | 34 | 33 | 32 | 31 | 30 | 29 | 28 | 27 | 26 | 25 | 24 | 23 | 22 | 21 | 20 | 19 | 18 | 17 | 16 | 15 | 14 | 13 | 12 | 11 | 10 | 9 | 8 | 7 | 6 | 5 | 4 | 3 | 2 | 1 | ASSEMBLY PART NUMBER | FORD PART NUMBER |

5S4T-14A464-N* PIN-OUT CHART

THIS DRAWING IS A CONTROLLED DOCUMENT.

DIMENSIONS: mm

TOLERANCES UNLESS OTHERWISE SPECIFIED:
0 PLC ±-
1 PLC ±0.3
2 PLC ±0.10
3 PLC ±-
4 PLC ±-
ANGLES ±1°

MATERIAL - -
FINISH - -

DWN R. VESTAL 15APR2005
CHK T. VALASEK 15APR2005
APVD T. VALASEK 15APR2005
PRODUCT SPEC -
APPLICATION SPEC -
WEIGHT -

TE Connectivity

NAME 50-WAY HARNESS ASSEMBLY, PCM -

SIZE A1 | CAGE CODE 00779 | DRAWING NO C-1438129 | RESTRICTED TO -

CUSTOMER DRAWING | SCALE 1:1 | SHEET 7 OF 10 | REV F37

4805 (3/13)

THIS DRAWING IS UNPUBLISHED. RELEASED FOR PUBLICATION 2018
© COPYRIGHT 2018 BY - TE CONNECTIVITY ALL RIGHTS RESERVED.

REVISIONS

| P | LTR | DESCRIPTION | DATE | DWN | APVD |
|---|---|---|---|---|---|
| | - | SEE SHEET 1 | - | - | - |

KEYING OPTION C

| | | | | | | | | | | | | | | | | | | | | | | | | | | | | | | | | | | | | | | | | | | | | | | | | | | | | |
|---|---|---|---|---|---|---|---|---|---|---|---|---|---|---|---|---|---|---|---|---|---|---|---|---|---|---|---|---|---|---|---|---|---|---|---|---|---|---|---|---|---|---|---|---|---|---|---|---|---|---|---|---|
| CAVITIES WITH A NUMERIC SYMBOL INDICATES CLOSED TERMINAL LOCATIONS | | | | | | | | | | | | 39 | 38 | 37 | 36 | | | | | | | 29 | 28 | | | | | 23 | | | 20 | 19 | | | | | | | | | 10 | 9 | 8 | 7 | 6 | 5 | | | | | 7-1924783-8 | 5S4T-14A464-NA-135 |
| | | | | | | | | | | | | 39 | 38 | 37 | 36 | | | | | | | 29 | 28 | | | | | 23 | | | 20 | 19 | | | | | | | | | 10 | 9 | 8 | 7 | | 5 | | | | | 7-1924783-4 | 5S4T-14A464-NA-134 |
| BLANK CAVITIES INDICATES OPEN TERMINAL HOLE LOCATIONS | | | | | | | | | | | | 39 | 38 | 37 | 36 | | | | | | | 29 | 28 | | | | | 23 | | | 20 | 19 | | | | | | | | | 10 | 9 | 8 | 7 | | | | | | | 7-1924783-2 | 5S4T-14A464-NA-133 |
| | | | | | | | | | | | | 39 | 38 | 37 | 36 | | | | | | | | 28 | | 26 | 25 | | 23 | | | 20 | | | | | | | | | 11 | 10 | | 8 | | 6 | 5 | | | | | 7-1924783-0 | 5S4T-14A464-NA-132 |
| TERMINAL HOLE POSITION | 50 | 49 | 48 | 47 | 46 | 45 | 44 | 43 | 42 | 41 | 40 | 39 | 38 | 37 | 36 | 35 | 34 | 33 | 32 | 31 | 30 | 29 | 28 | 27 | 26 | 25 | 24 | 23 | 22 | 21 | 20 | 19 | 18 | 17 | 16 | 15 | 14 | 13 | 12 | 11 | 10 | 9 | 8 | 7 | 6 | 5 | 4 | 3 | 2 | 1 | ASSEMBLY PART NUMBER | FORD PART NUMBER |

5S4T-14A464-N* PIN-OUT CHART

THIS DRAWING IS A CONTROLLED DOCUMENT.

DIMENSIONS: mm

TOLERANCES UNLESS OTHERWISE SPECIFIED:
0 PLC ±-
1 PLC ±0.3
2 PLC ±0.10
3 PLC ±-
4 PLC ±-
ANGLES ±1°

MATERIAL - -
FINISH - -

DWN R. VESTAL 15APR2005
CHK T. VALASEK 15APR2005
APVD T. VALASEK 15APR2005
PRODUCT SPEC -
APPLICATION SPEC -
WEIGHT -

TE Connectivity

NAME 50-WAY HARNESS ASSEMBLY, PCM
-

| SIZE | CAGE CODE | DRAWING NO | RESTRICTED TO |
|---|---|---|---|
| A1 | 00779 | C-1438129 | - |

CUSTOMER DRAWING | SCALE 1:1 | SHEET 8 OF 10 | REV F37

4805 (3/13)

THIS DRAWING IS UNPUBLISHED. RELEASED FOR PUBLICATION 2018
© COPYRIGHT 2018 BY - TE CONNECTIVITY ALL RIGHTS RESERVED.

REVISIONS

| P | LTR | DESCRIPTION | DATE | DWN | APVD |
|---|---|---|---|---|---|
| | - | SEE SHEET 1 | - | - | - |

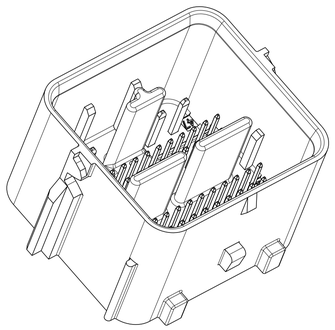

SCALE 2:1

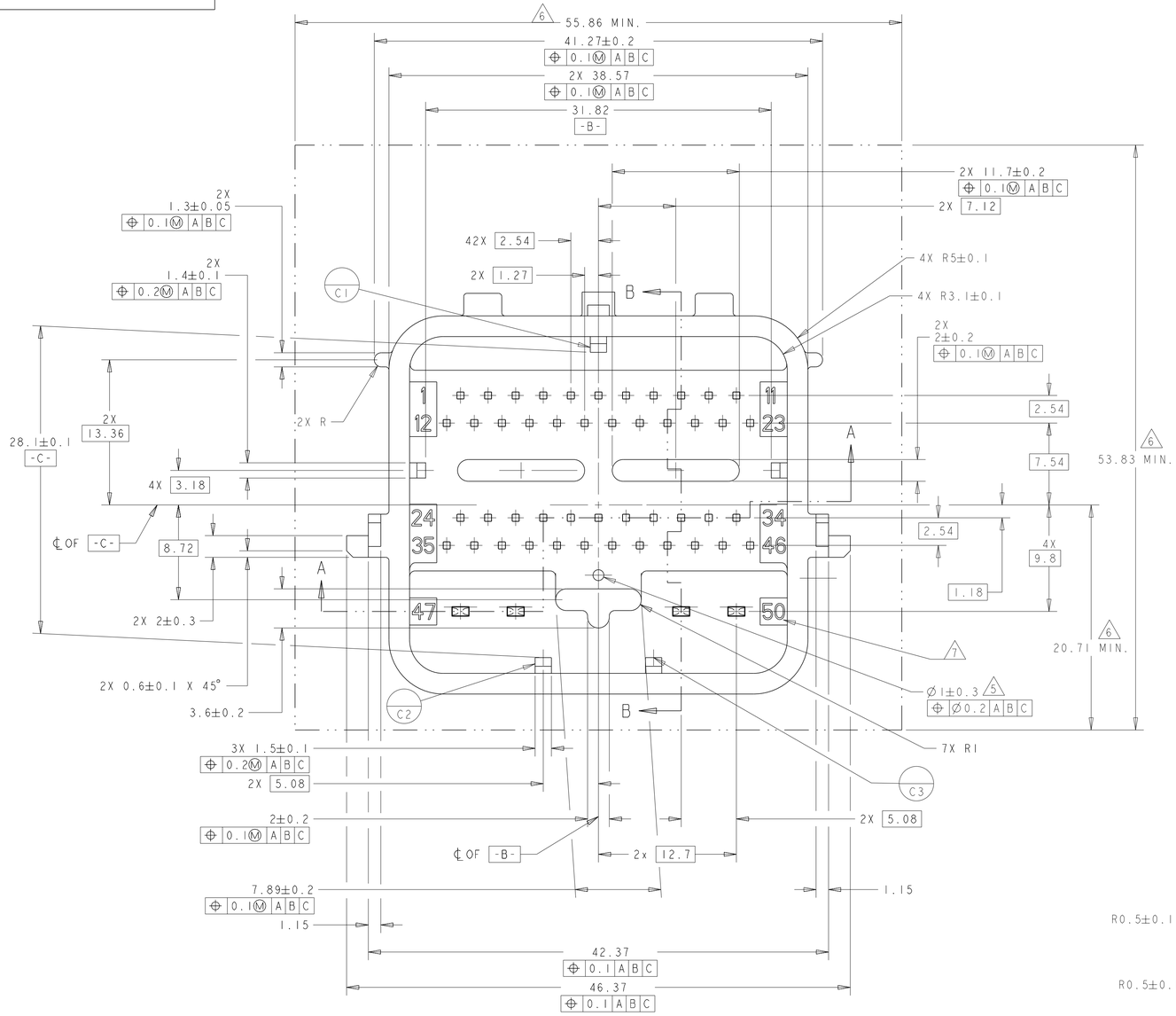


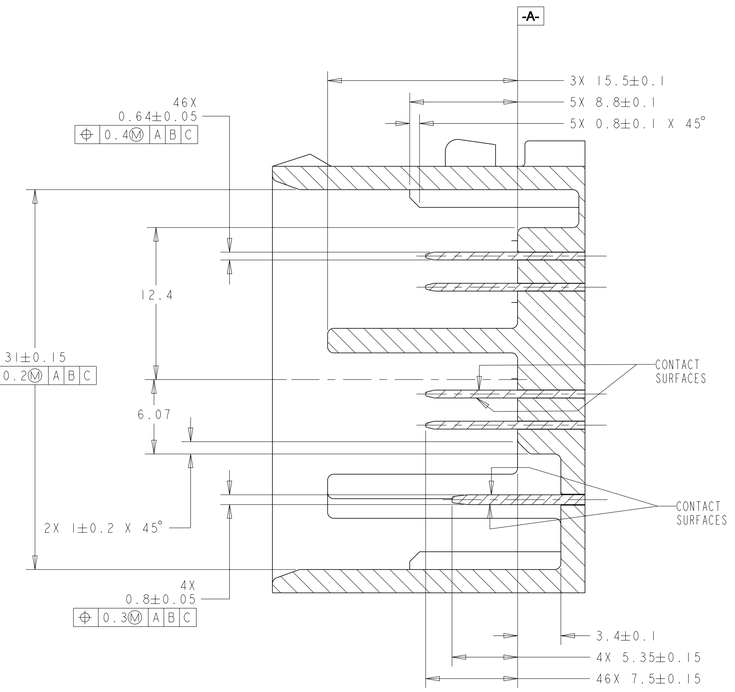


SECTION B-B

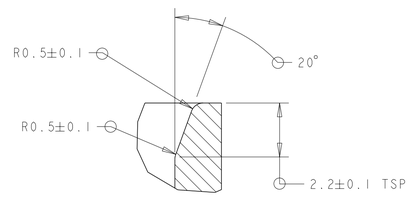


DETAIL E
SCALE 8:1

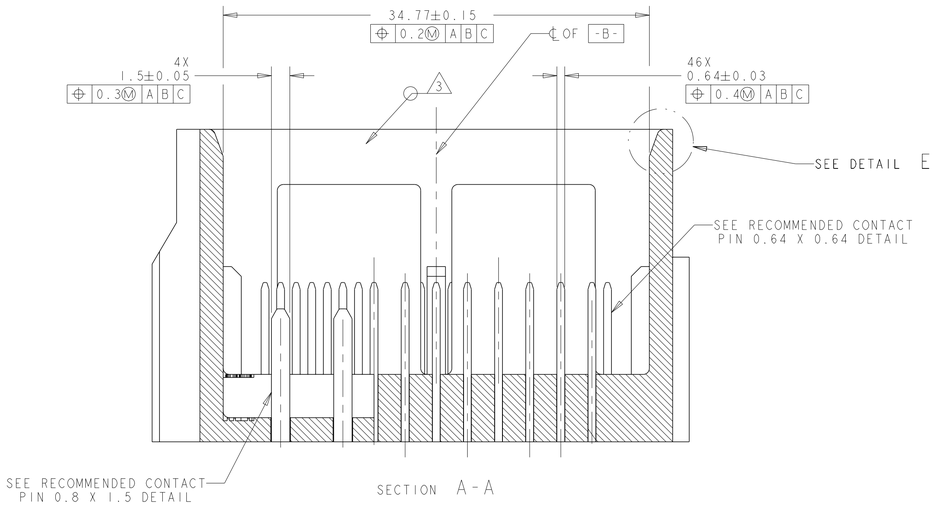


SECTION A-A

NOTES: UNLESS OTHERWISE SPECIFIED

1. GENERAL TOLERANCE:
   ±0.3 ALL ONE PLACE DIMENSIONS
   ±0.10 ALL TWO PLACE DIMENSIONS
   ±1°00′ ALL ANGULAR DIMENSIONS
2. DRAFT ANGLE PERMISSIBLE ONLY WITHIN DRAWING TOLERANCE.
3. SEALING SURFACE, NO WITNESS LINES OR DAMAGE PERMITTED.
4. ALL UNMARKED RADII TO BE 0.5 MAX., UNLESS OTHERWISE SPECIFIED.
5. VENT HOLE SIZE AND LOCATION IS OPTIONAL.
6. THIS AREA TO REMAIN CLEAR FOR THE HARNESS ASSEMBLY.
7. TERMINAL POSITION IDENTIFICATION.
8. MATES WITH TYCO ELECTRONICS PART NUMBERS 1438129-* & 1438950-*

THIS DRAWING IS A CONTROLLED DOCUMENT.

DIMENSIONS: mm

TOLERANCES UNLESS OTHERWISE SPECIFIED:
0 PLC ±-
1 PLC ±0.3
2 PLC ±0.10
3 PLC ±-
4 PLC ±-
ANGLES ±1°

MATERIAL -
FINISH -

DWN B. VESTAL 15APR2005
CHK T. VALASEK 15APR2005
APVD T. VALASEK 15APR2005
PRODUCT SPEC -
APPLICATION SPEC -
WEIGHT -

TE Connectivity

NAME 50-WAY HARNESS ASSEMBLY, PCM

| SIZE | CAGE CODE | DRAWING NO | RESTRICTED TO |
|---|---|---|---|
| A1 | 00779 | C-1438129 | - |

CUSTOMER DRAWING SCALE 1:1 SHEET 9 OF 10 REV F37

4805 (3/13)

THIS DRAWING IS UNPUBLISHED. RELEASED FOR PUBLICATION 2018
© COPYRIGHT 2018 BY - TE CONNECTIVITY ALL RIGHTS RESERVED.

REVISIONS

| P | LTR | DESCRIPTION | DATE | DWN | APVD |
|---|---|---|---|---|---|
| | - | SEE SHEET 1 | - | - | - |

# HEADER INTERFACE KEYING OPTIONS

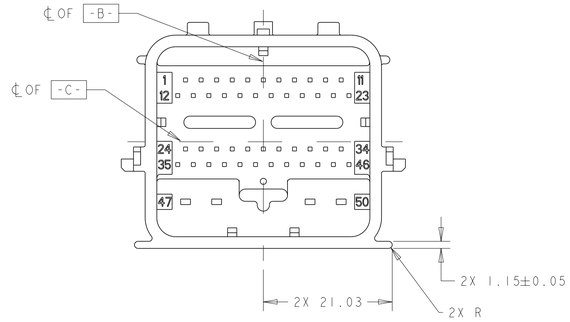


KEYING OPTION "A"
SCALE 2:1

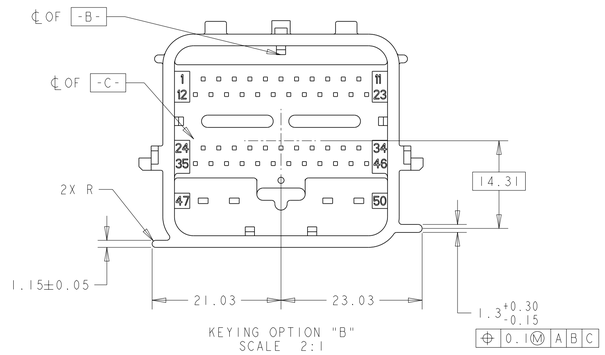


KEYING OPTION "B"
SCALE 2:1

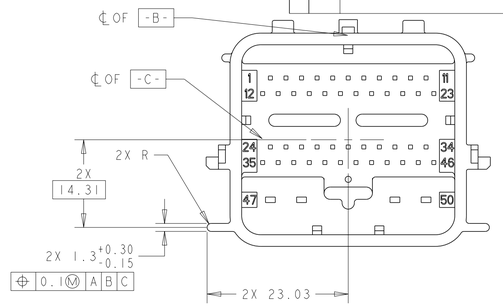


KEYING OPTION "C"
SCALE 2:1

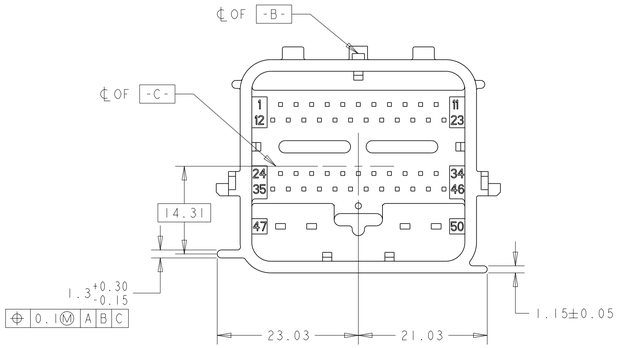


KEYING OPTION "D"
SCALE 2:1

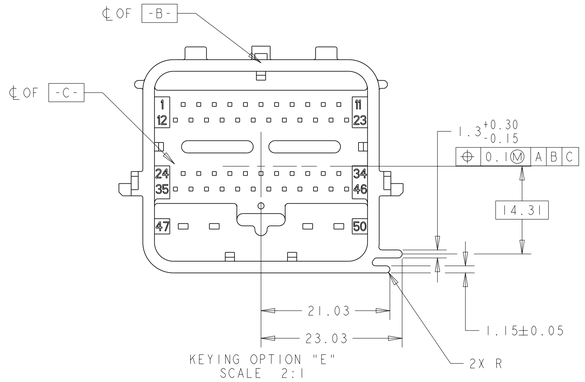


KEYING OPTION "E"
SCALE 2:1

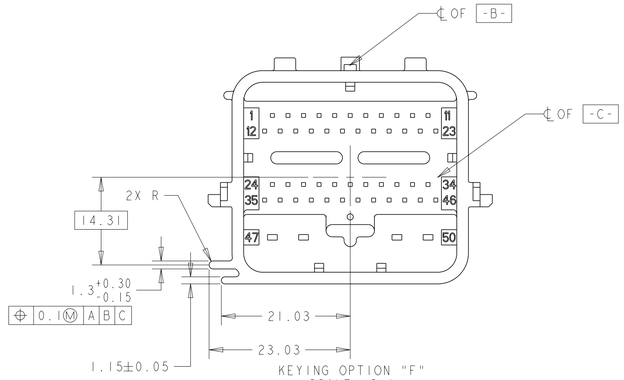


KEYING OPTION "F"
SCALE 2:1

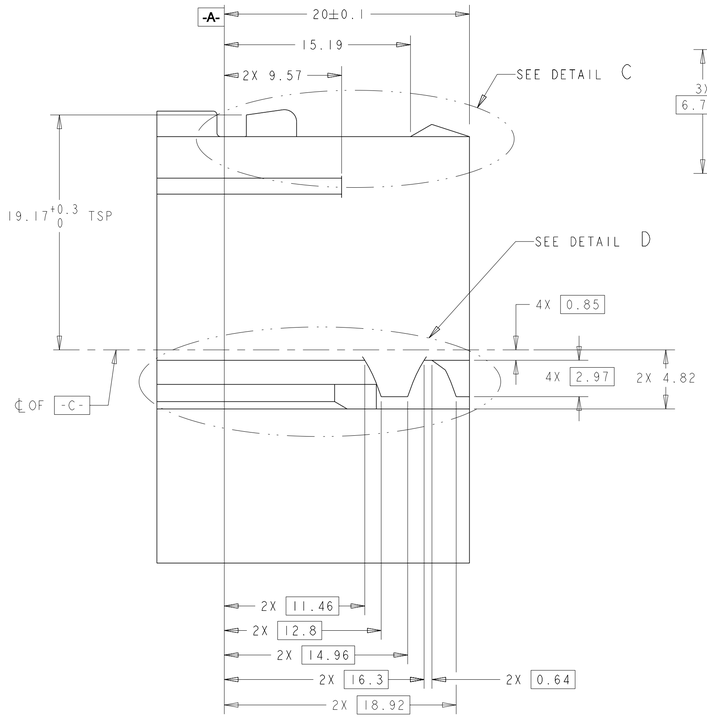


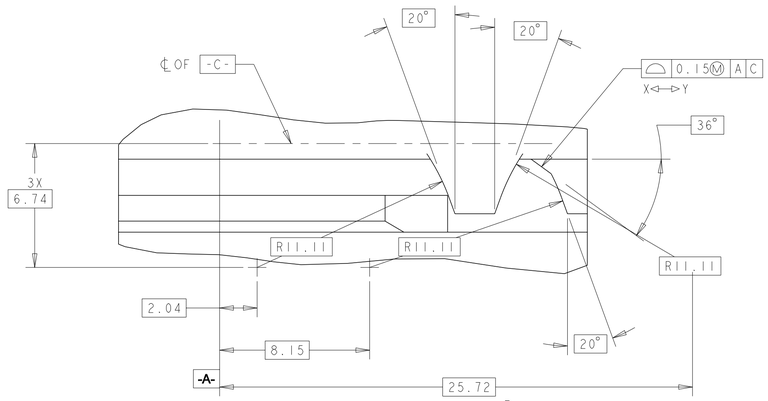


DETAIL D
SCALE 6:1
TYP. 2 PLCS.

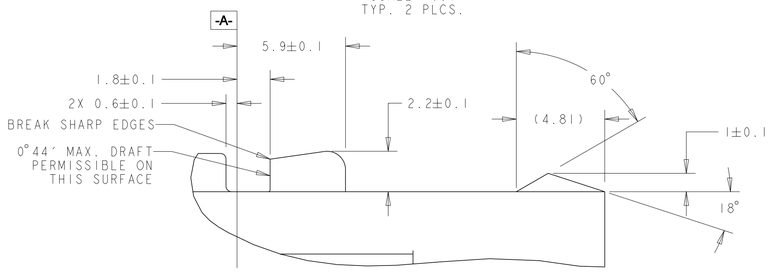


DETAIL C
SCALE 6:1

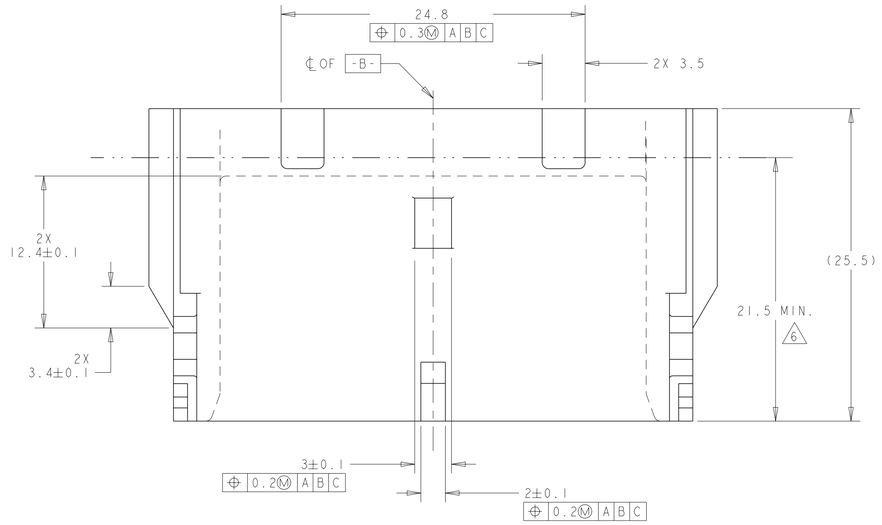


THIS DRAWING IS A CONTROLLED DOCUMENT.

DIMENSIONS: mm

TOLERANCES UNLESS OTHERWISE SPECIFIED:
0 PLC ±
1 PLC ±0.3
2 PLC ±0.10
3 PLC ±
4 PLC ±
ANGLES ±1°

MATERIAL - -
FINISH - -

DWN R. VESTAL 15APR2005
CHK T. VALASEK 15APR2005
APVD T. VALASEK 15APR2005
PRODUCT SPEC -
APPLICATION SPEC -
WEIGHT -

TE Connectivity

NAME 50-WAY HARNESS ASSEMBLY, PCM -

| SIZE | CAGE CODE | DRAWING NO | RESTRICTED TO |
|---|---|---|---|
| A1 | 00779 | C-1438129 | - |

CUSTOMER DRAWING SCALE 1:1 SHEET 10 OF 10 REV F37

4805 (3/13)

# Mouser Electronics

Authorized Distributor

Click to View Pricing, Inventory, Delivery & Lifecycle Information:

TE Connectivity:

1-1438950-1