THIS DRAWING IS UNPUBLISHED. RELEASED FOR PUBLICATION - ,- .
© COPYRIGHT - By - ALL RIGHTS RESERVED.

LOC	DIST
AD	00

REVISIONS

P	LTR	DESCRIPTION	DATE	DWN	APVD
	L7	REVISED PER ECO-13-005565	01APR13	KH	JO

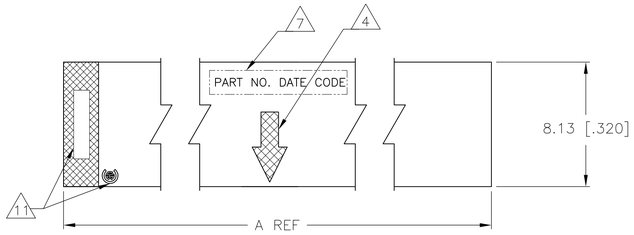

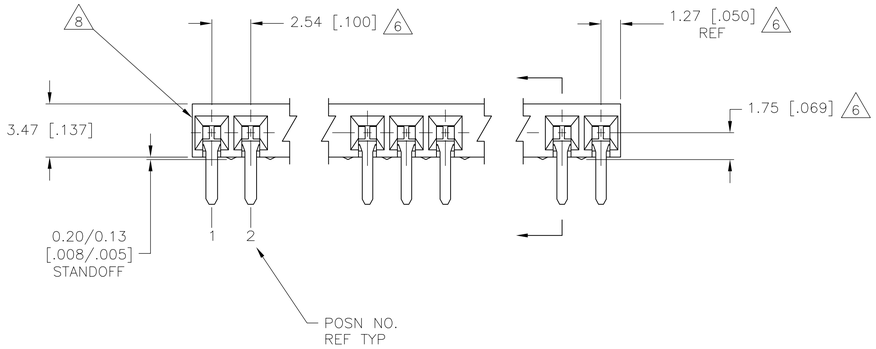

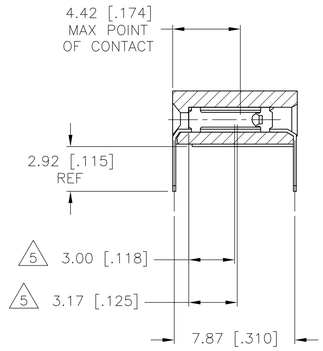

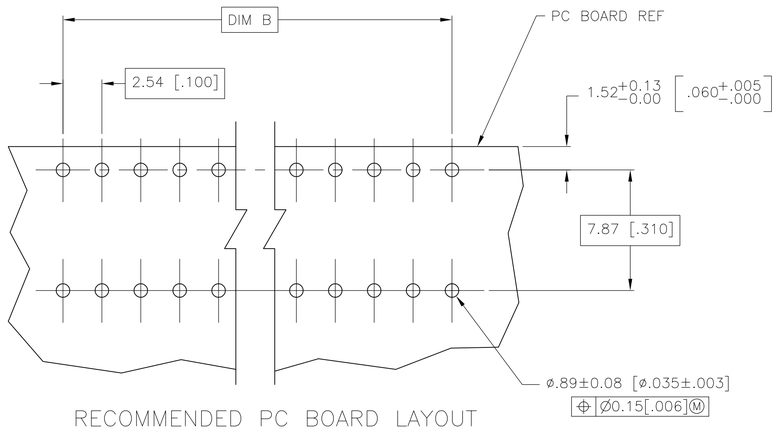

RECOMMENDED PC BOARD LAYOUT

B	A	NO. OF POSN	ASSEMBLY PART NUMBER
162.56[6.400]	165.10[6.500]	65	6-535676-4
160.02[6.300]	162.56[6.400]	64	6-535676-3
157.48[6.200]	160.02[6.300]	63	6-535676-2
154.94[6.100]	157.48[6.200]	62	6-535676-1
152.40[6.000]	154.94[6.100]	61	6-535676-0
149.86[5.900]	152.40[6.000]	60	5-535676-9
147.32[5.800]	149.86[5.900]	59	5-535676-8
144.78[5.700]	147.32[5.800]	58	5-535676-7
142.24[5.600]	144.78[5.700]	57	5-535676-6
139.70[5.500]	142.24[5.600]	56	5-535676-5
137.16[5.400]	139.70[5.500]	55	5-535676-4
134.62[5.300]	137.16[5.400]	54	5-535676-3
132.08[5.200]	134.62[5.300]	53	5-535676-2
129.54[5.100]	132.08[5.200]	52	5-535676-1
127.00[5.000]	129.54[5.100]	51	5-535676-0
124.46[4.900]	127.00[5.000]	50	4-535676-9
121.92[4.800]	124.46[4.900]	49	4-535676-8
119.38[4.700]	121.92[4.800]	48	4-535676-7
116.84[4.600]	119.38[4.700]	47	4-535676-6
114.30[4.500]	116.84[4.600]	46	4-535676-5
111.76[4.400]	114.30[4.500]	45	4-535676-4
109.22[4.300]	111.76[4.400]	44	4-535676-3
106.68[4.200]	109.22[4.300]	43	4-535676-2
104.14[4.100]	106.68[4.200]	42	4-535676-1
101.16[4.000]	104.14[4.100]	41	4-535676-0
99.06[3.900]	101.16[4.000]	40	3-535676-9
96.52[3.800]	99.06[3.900]	39	3-535676-8
93.98[3.700]	96.52[3.800]	38	3-535676-7
91.44[3.600]	93.98[3.700]	37	3-535676-6
88.90[3.500]	91.44[3.600]	36	3-535676-5
86.36[3.400]	88.90[3.500]	35	3-535676-4
83.82[3.300]	86.36[3.400]	34	3-535676-3
81.28[3.200]	83.82[3.300]	33	3-535676-2
78.74[3.100]	81.28[3.200]	32	3-535676-1
76.20[3.000]	78.74[3.100]	31	3-535676-0
73.66[2.900]	76.20[3.000]	30	2-535676-9
71.12[2.800]	73.66[2.900]	29	2-535676-8
68.58[2.700]	71.12[2.800]	28	2-535676-7
66.04[2.600]	68.58[2.700]	27	2-535676-6
63.50[2.500]	66.04[2.600]	26	2-535676-5
60.96[2.400]	63.50[2.500]	25	2-535676-4
58.42[2.300]	60.96[2.400]	24	2-535676-3
55.88[2.200]	58.42[2.300]	23	2-535676-2
53.34[2.100]	55.88[2.200]	22	2-535676-1
50.80[2.000]	53.34[2.100]	21	2-535676-0
48.26[1.900]	50.80[2.000]	20	1-535676-9
45.72[1.800]	48.26[1.900]	19	1-535676-8
43.18[1.700]	45.72[1.800]	18	1-535676-7
40.64[1.600]	43.18[1.700]	17	1-535676-6
38.10[1.500]	40.64[1.600]	16	1-535676-5
35.56[1.400]	38.10[1.500]	15	1-535676-4
33.02[1.300]	35.56[1.400]	14	1-535676-3
30.48[1.200]	33.02[1.300]	13	1-535676-2
27.94[1.100]	30.48[1.200]	12	1-535676-1
25.40[1.000]	27.94[1.100]	11	1-535676-0
22.86[.900]	25.40[1.000]	10	535676-9
20.32[.800]	22.86[.900]	9	535676-8
17.78[.700]	20.32[.800]	8	535676-7
15.24[.600]	17.78[.700]	7	535676-6
12.70[.500]	15.24[.600]	6	535676-5
9 10.16[.400]	12.70[.500]	5	535676-4
9 7.62[.300]	10.16[.400]	4	535676-3
9 5.08[.200]	7.62[.300]	3	8 535676-2
9 2.54[.100]	5.08[.200]	2	8 535676-1

1. HOUSING MATERIAL: GLASS FILLED POLYESTER, COLOR- BLACK
2. CONTACT MATERIAL: PHOSPHOR BRONZE
3. CONTACT FINISH: 0.00076[.000030] THK DUPLEX PLATED GOLD ON CONTACT AREA, 0.00127[.000050] MIN THK BRIGHT TIN-LEAD ON SOLDERLEADS, ALL OVER 0.00127[.000050] NICKEL
4. MOLDED IN ARROW DESIGNATES THE MATING FACE OF THE CONNECTOR
5. POINT OF MEASUREMENT FOR PLATING THICKNESS OF CONTACT AREA
6. DIMENSIONS PERTAIN TO HOUSING CAVITY CENTERLINES
7. MARK PART NUMBER AND DATE CODE IN APPROXIMATE LOCATION SHOWN, EITHER END.
8. ALTERNATE LOCATION FOR DATE CODE FOR 2 AND 3 POSITION.
9. NO PART NUMBER MARKING REQUIRED FOR THIS PART.
11. TE CONNECTIVITY LOGO AND CSA LOGO ARE MOLDED INTO HOUSING, THIS LOCATION

THIS DRAWING IS A CONTROLLED DOCUMENT.

DIMENSIONS: mm

TOLERANCES UNLESS OTHERWISE SPECIFIED:
0 PLC ± -
1 PLC ± -
2 PLC ± -
3 PLC ± 0.13[.005]
4 PLC ± -
ANGLES ± -

MATERIAL 1 2
FINISH 3

DWN R BROWN 03JUN02
CHK J OLSON 03JUN02
APVD J OLSON 03JUN02
PRODUCT SPEC —
APPLICATION SPEC —
WEIGHT —

TE Connectivity

NAME AMPMODU MOD II RECEPTACLE ASSEMBLY, HORIZONTAL, .100 CL, SINGLE ROW, CLOSED-ENTRY, SHORT POINT OF CONTACT, END-TO-END STACKABLE

SIZE	CAGE CODE	DRAWING NO	RESTRICTED TO
A1	00779	C-535676	—

CUSTOMER DRAWING | SCALE 5:1 | SHEET 1 OF 1 | REV L7

4805 (3/11)

Mouser Electronics

Authorized Distributor

Click to View Pricing, Inventory, Delivery & Lifecycle Information:

TE Connectivity:

3-535676-2