Aug.1.2020 Copyright 2020 HIROSE ELECTRIC CO., LTD. All Rights Reserved.
In case of consideration for using Automotive equipment / device which demand high reliability, kindly contact our sales window correspondents.

	COUNT	DESCRIPTION OF REVISIONS	BY	CHKD	DATE		COUNT	DESCRIPTION OF REVISIONS	BY	CHKD	DATE
△					. .	△					. .
△					. .	△					. .
△					. .	△					. .

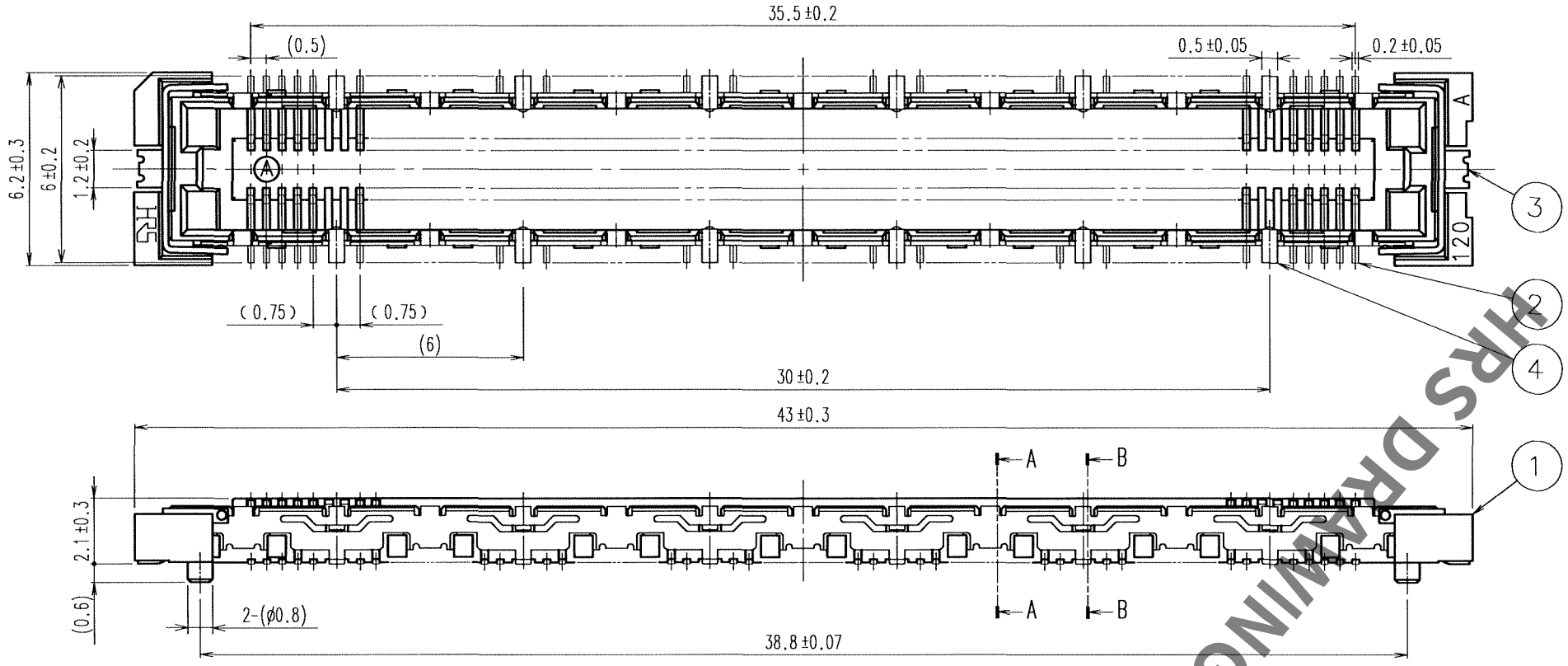

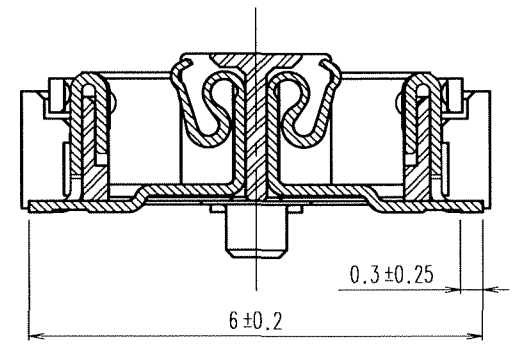

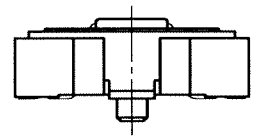

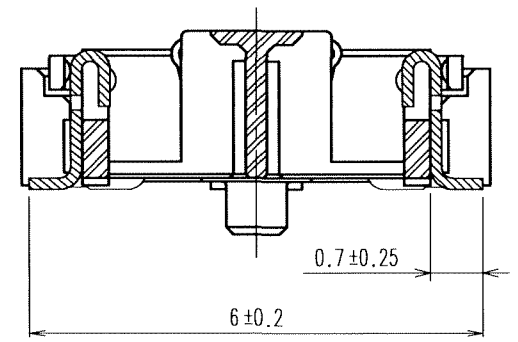

RECOMMENDED LAND PATTERN DIMENSION OF PCB

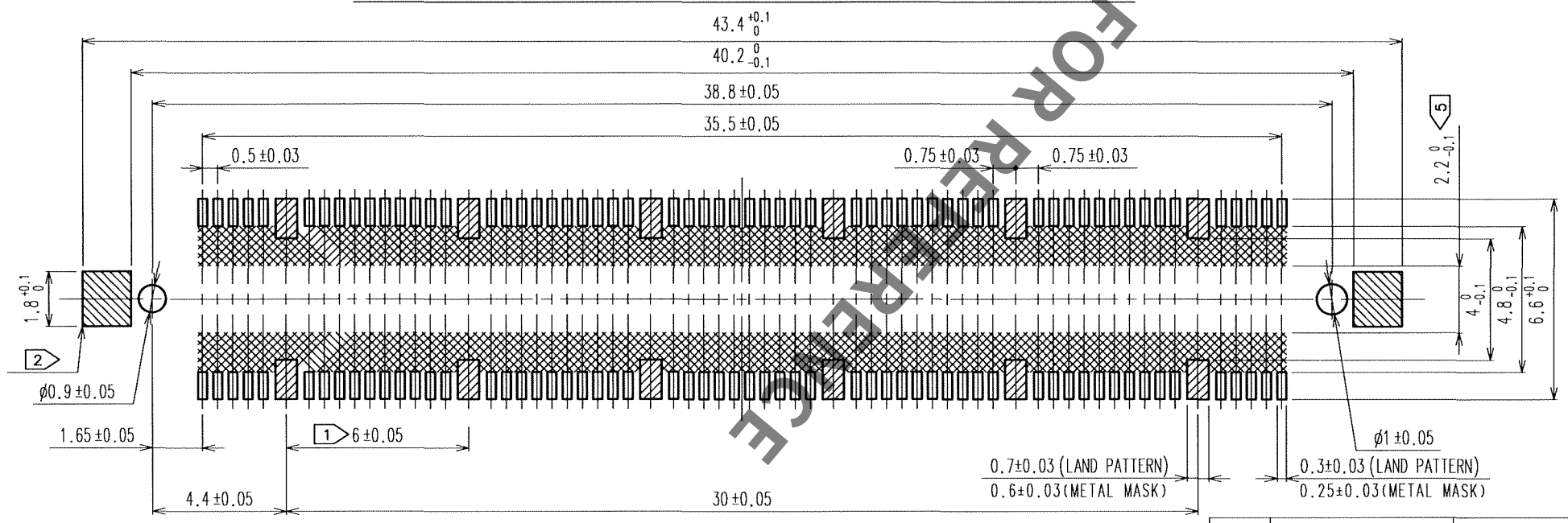

HRS DRAWING FOR REFERENCE

NO.	MATERIAL	FINISH, REMARKS
3, 4	PHOSPHOR BRONZE	TIN-PLATING
1	LCP	BEIGE UL94V-0

NO.	MATERIAL	FINISH, REMARKS
2	PHOSPHOR BRONZE	CONTACT AREA:GOLD 0.1μm min. LEAD AREA:GOLD FLASH UNDER PLATING:NICKEL 1μm min.

NOTES
1. 12 HATCHED PARTS:GROUND CIRUIT.
2. 2 HATCHED PARTS:GROUND CIRUIT.
3. SMT LEAD-COPLANARITY:0.1 MAX.
4. THIS PRODUCT HAS NO POLARITY TO PATTERN FOR MOUNTING.
5. MAKE SURE WIDTH OF PATTERN IS WITHIN THAT OF LAND ,OR LEAD MAY TOUCH PATTERN.(THIS APPLIES TO HATCHED AREA.)
6. DIMENSIONS IN PARENTHESES ARE FOR REFERENCE.

CODE NO.(OLD)	DRAWN	DESIGNED	CHECKED	APPROVED	RELEASED
CL	K.NAKAMURA 06.02.20	K.NAKAMURA 06.02.20	'06-02-20	'06-02-20	

SCALE 5 : 1
UNITS mm

DRAWING NO. EDC3-152635-25

HRS HIROSE ELECTRIC CO.,LTD.

PART NO. FX11A-120S/12-SV(71)

CODE NO. CL573-0705-7-71

1/1

FORM NO.229

TO
PCK