THIS DRAWING IS UNPUBLISHED. RELEASED FOR PUBLICATION - ,- .
© COPYRIGHT - By - ALL RIGHTS RESERVED.

| REVISIONS | | | | | |
|---|---|---|---|---|---|
| P | LTR | DESCRIPTION | DATE | DWN | APVD |
| | R1 | REVISED PER ECO-16-001847 | 19JUL2016 | NK | MZ |

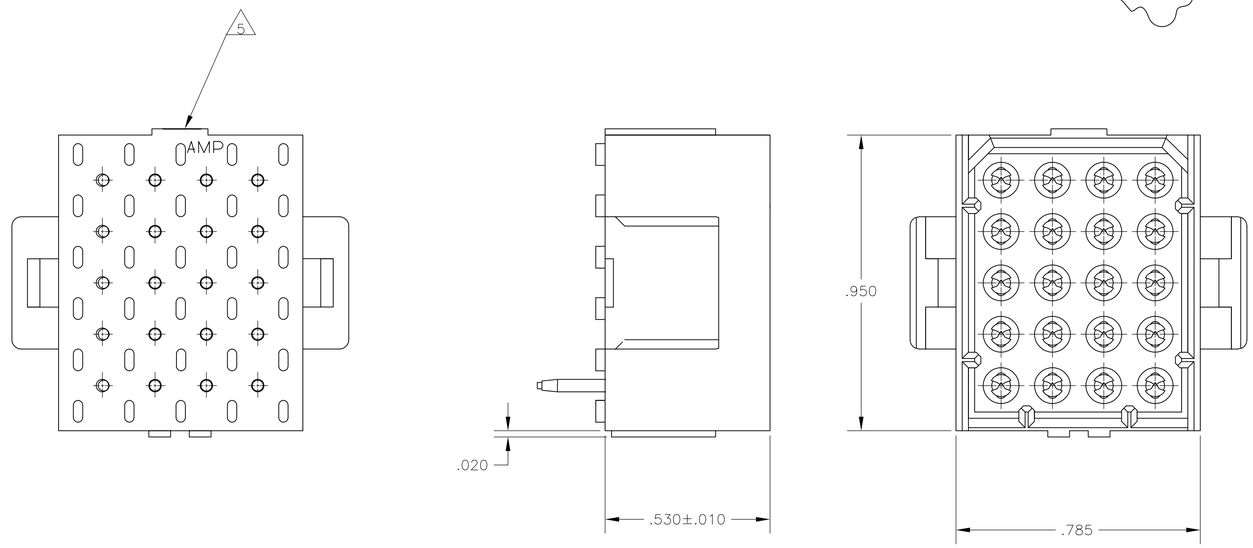


1 FITS SOCKET HOUSING 640524.

2 ASSEMBLY CONFORMS TO AMP SOLDERABILITY SPEC. 109-11-3.

3 FOR USE WITH .063 THICK P.C. BOARD.

4 CONTACT IS PLATED OVERALL WITH.000050 NICKEL, THEN .000030 GLD OVER CONTACT LENGTH INDICATED AND .000150 MATTE TIN-LEAD ON SOLDER TAIL END.

5 UL AND CSA LOGO LOCATED ON THIS SURFACE.

6 FOR USE WITH .120 THICK P.C. BOARD.

7 CONTACT IS PLATED OVERALL WITH.000050 NICKEL, THEN .000030 GLD OVER CONTACT LENGTH INDICATED AND .000150 MATTE TIN ON SOLDER TAIL END.

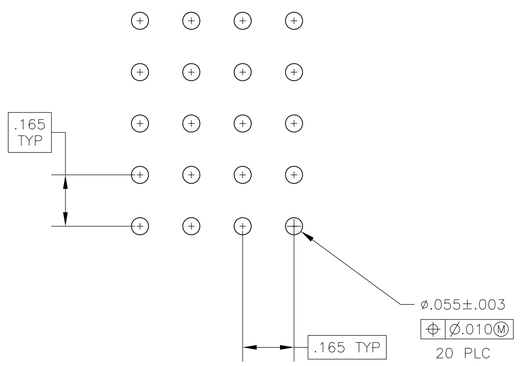


RECOMMENDED P.C. BOARD LAYOUT

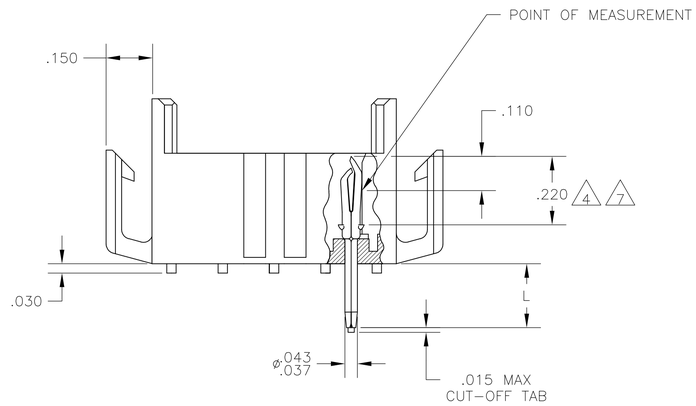


| | | | | |
|---|---|---|---|---|
| | .210 6 | BRICK RED | GOLD 7 | 2-640504-4 |
| | .150 3 | BRICK RED | GOLD 7 | 2-640504-2 |
| | .210 6 | BRICK RED | GOLD 4 | 640504-4 |
| | .210 6 | BRICK RED | PRE-TIN | 640504-3 |
| OBSOLETE | .150 3 | BRICK RED | GOLD 4 | ~~640504-2~~ |
| | .150 3 | BRICK RED | PRE-TIN | 640504-1 |
| | "L" +.010 -.020 | HOUSING COLOR | PIN FINISH | PART NUMBER |

| | | | | | | | |
|---|---|---|---|---|---|---|---|
| .010 | 0.25 | .055 | 1.40 | .220 | 5.59 | - | - |
| .008 | 0.20 | .043 | 1.09 | .210 | 5.33 | - | - |
| .005 | 0.13 | .037 | 0.94 | .165 | 4.19 | - | - |
| .003 | 0.08 | .030 | 0.76 | .150 | 3.81 | .950 | 24.13 |
| .000050 | 0.00127 | .020 | 0.51 | .110 | 2.79 | .785 | 19.94 |
| .000030 | 0.00076 | .015 | 0.38 | .063 | 1.60 | .530 | 13.46 |
| IN | MM | IN | MM | IN | MM | IN | MM |

CONVERSION TABLE

THIS DRAWING IS A CONTROLLED DOCUMENT.

DIMENSIONS: INCHES

TOLERANCES UNLESS OTHERWISE SPECIFIED:
0 PLC ± -
1 PLC ± -
2 PLC ± -
3 PLC ± .005
4 PLC ± -
ANGLES ± 0° 30'

MATERIAL: HOUSING:FLAME RETARDANT NYLON, UL 94V-0 PIN, .008 PH BRZ.

FINISH: SEE TABLE

DWN J. HUFFMAN 28APR98
CHK R. SWING 28APR98
APVD T. REDDICK 28APR98

PRODUCT SPEC —
APPLICATION SPEC —
WEIGHT —

TE Connectivity

NAME: HEADER ASSEMBLY, PIN, 20 POSITION, MR.

SIZE A1 | CAGE CODE 00779 | DRAWING NO C-640504 | RESTRICTED TO —

CUSTOMER DRAWING | SCALE 4:1 | SHEET 1 OF 1 | REV R1

4805 (1/15)

# Mouser Electronics

Authorized Distributor

Click to View Pricing, Inventory, Delivery & Lifecycle Information:

TE Connectivity:

640504-3