DRAWING MADE IN THIRD ANGLE PROJECTION

680130 ⇔ 680130

<US1618>DEPTPROJB>U.1618>U.FTB

| PART NUMBER | REV | FIRST USED |
|---|---|---|
| 680130-1 | A | 854400-1 |
| 680130-2 | A | 565435-5 |
| 680130-3 | A | 354500-1 |

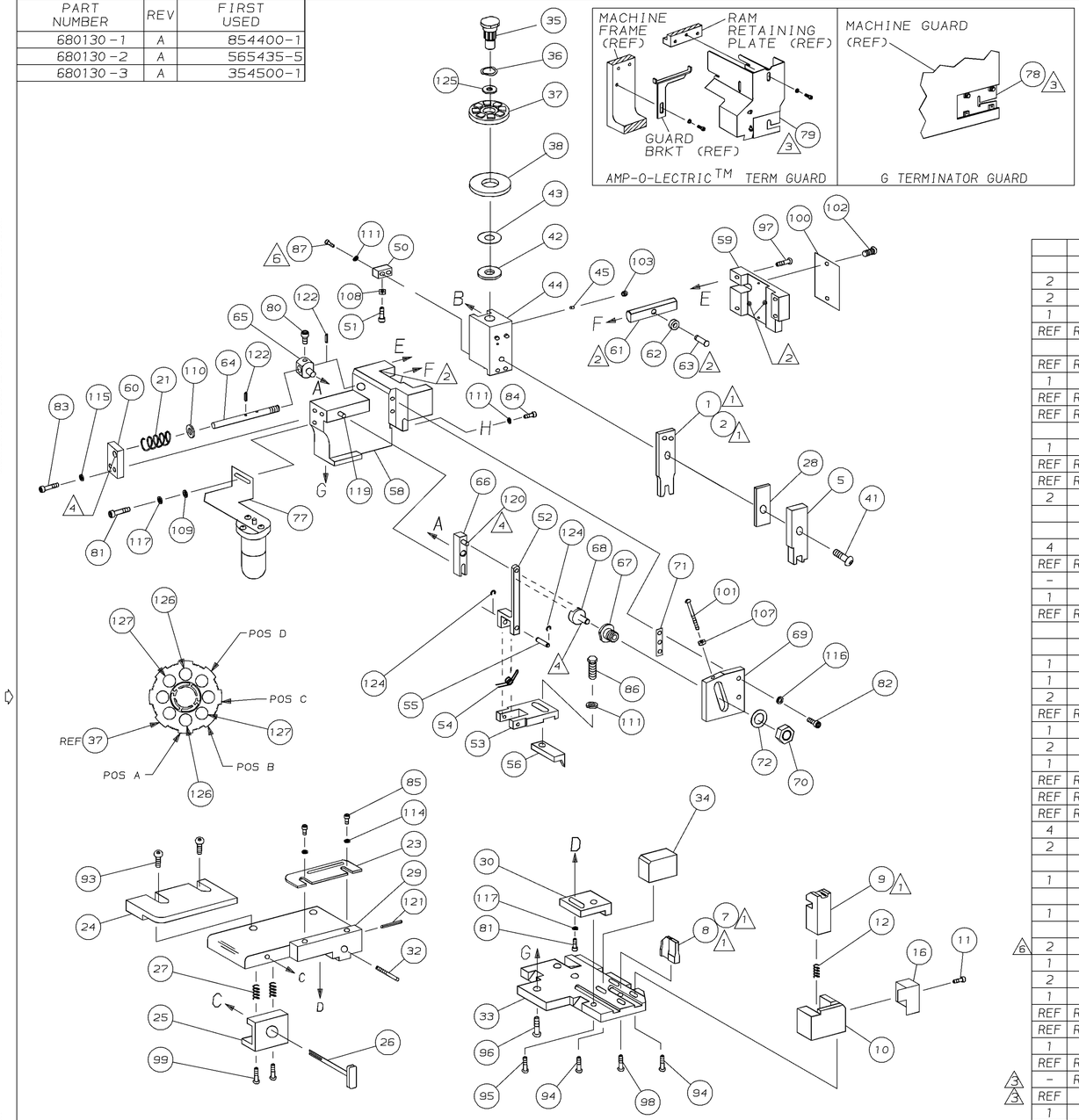


| TERMINAL NAME: BLADE CONTACT | |
|---|---|
| 8 | 94-4813-87-1 |
| 7 | 94-4813-10-1 |

TERM APPL SPEC 114-02068

| CRIMPING DATA | | | | |
|---|---|---|---|---|
| PAD LTR | CRIMP HEIGHT | | WIRE SIZE | |
| A | .041 ±.002 | | 20 | 8 |
| B | .028 ±.002 | | 30 | 7 |
| C | NOT | | USED | |
| D | NOT | | USED | |
| CRIMP | SIZE | TYPE | RANGE | |
| WIRE | .070 | F | 20 | 8 |
| WIRE | .055 | F | 30 | 7 |
| FEED | APPL INST | | SET UP GAGE | LAYOUT |
| .216 | 408-8040 | | 458637-1 | L1608 |
| WIRE STRIP LENGTH | | | - | |

| -3 | -2 | -1 | U/M | DWG SIZE | PART NO | DESCRIPTION | ITEM NO |
|---|---|---|---|---|---|---|---|
| | | | | | | | 129 |
| | | | | | | | 128 |
| 2 | 2 | 2 | - | C | 3-354778-3 | PIN, WIRE DISC (.2660)B | 127 |
| 2 | 2 | 2 | - | C | 354778-5 | PIN, WIRE DISC (.2520)A | 126 |
| 1 | 1 | 1 | - | A | 986950-1 | WASHER, FLAT PRECISION | 125 |
| REF | REF | REF | - | A | 21045-3 | RING,RET "C"(ø.187)FD FING PIN | 124 |
| | | | | | | | 123 |
| REF | REF | REF | - | A | 5-21028-1 | PIN,SLT SPR(ø.125x.50)ADJ ROD | 122 |
| 1 | 1 | 1 | - | A | 4-21028-0 | PIN,SLT SPR(ø.093x.75)ST GDE PL | 121 |
| REF | REF | REF | - | A | 1-21030-1 | PIN,DOWEL(ø.187x.50)LEVER | 120 |
| REF | REF | REF | - | A | 1-21030-6 | PIN,DOWEL(ø.187x1.25)HOUSING | 119 |
| | | | | | | | 118 |
| 1 | 1 | 1 | - | A | 21024-5 | WASHER, LOCK(#10)ADJ BLOCK | 117 |
| REF | REF | REF | - | A | 21024-5 | WASHER,LOCK(#10)ADJ PLATE | 116 |
| REF | REF | REF | - | A | 21024-5 | WASHER,LOCK(#10)FEED GDE ROD | 115 |
| 2 | 2 | 2 | - | A | 21024-2 | WASHER,LOCK(#4)FRONT STP GUIDE | 114 |
| | | | | | | | 113 |
| | | | | | | | 112 |
| 4 | 4 | 4 | - | A | 21024-4 | WASHER,LOCK(#8)STRIPPER | 111 |
| REF | REF | REF | - | A | 21899-4 | WASHER,FLAT(ø5/16)SCREW ADJ | 110 |
| - | 1 | - | - | A | 21899-2 | WASHER,FLAT(NO.10)LUB ASSY | 109 |
| 1 | 1 | 1 | - | A | 21018-5 | NUT,HEX(NO.6)HOLDDOWN | 108 |
| REF | REF | REF | - | A | 21018-5 | NUT,HEX(6-32)FEED ADJ | 107 |
| | | | | | | | 106 |
| | | | | | | | 105 |
| 1 | 1 | - | - | A | 992031-1 | PIN, CLEVIS | 104 |
| 1 | 1 | 1 | - | A | 21009-2 | SCR,SKT SET(1/4-20x.25 LW)RAM | 103 |
| 2 | 2 | 2 | - | A | 21017-2 | SCR,DRIVE(#2x.19)ID PLATE | 102 |
| REF | REF | REF | - | A | 6-23715-5 | SCR,PAN HD(6-32x1.50)FEED ADJ | 101 |
| 1 | 1 | 1 | - | B | 461264-1 | PLATE, IDENTIFICATION | 100 |
| 2 | 2 | 2 | - | A | 3-21002-0 | SCR,BHC(10-32x.88)DRAG | 99 |
| 1 | 1 | 1 | - | A | 22733-8 | SCR,BHC(8-32x.38 LW)ANVIL | 98 |
| REF | REF | REF | - | A | 2-21002-9 | SCR,BHC(10-32x.75)CAP | 97 |
| REF | REF | REF | - | A | 2-22733-8 | SCR,BHC(1/4-20x.62)HOUSING | 96 |
| REF | REF | REF | - | A | 2-21002-7 | SCR,BHC(10-32x.50)SG ADJ BLOCK | 95 |
| 4 | 4 | 4 | - | A | 2-21002-2 | SCR,BHC(8-32x.50)SHEAR | 94 |
| 2 | 2 | 2 | - | A | 2-21002-1 | SCR,BHC(8-32x.38)R STRIP GUIDE | 93 |
| | | | | | | | 92 |
| 1 | 1 | 1 | - | A | 1-21002-7 | SCR,BHC(6-32x.38)CAM | 91 |
| | | | | | | | 90 |
| 1 | 1 | - | - | A | 7-21000-9 | SCR,SHC(4-40x.19)STRIPPER | 89 |
| | | | | | | | 88 |
| 2 | 2 | 2 | - | A | 2-21000-7 | SCR,SHC(8-32x.48)HOLDDOWN | 87 |
| 1 | 1 | 1 | - | A | 2-22603-0 | SCR,HEX HD(8-32x.31)FEED FINGER | 86 |
| 2 | 2 | 2 | - | A | 1-21000-3 | SCR,SHC(4-40x.25)F ST GUIDE | 85 |
| 1 | 1 | 1 | - | A | 2-21000-7 | SCR,SHC(8-32x.50)STRIPPER | 84 |
| REF | REF | REF | - | A | 3-21000-7 | SCR,SHC(10-32x.75)FEED ROD GD | 83 |
| REF | REF | REF | - | A | 3-21000-6 | SCR,SHC(10-32x.62)FD ADJ BLK | 82 |
| 1 | 2 | 1 | - | A | 3-21000-4 | SCR,SHC(10-32x.38)SG ADJ BL | 81 |
| REF | REF | REF | - | A | 3-21000-4 | SCR,SHC(10-32x.38)PIVOT BLK | 80 |
| - | REF | - | - | B | 455749-1 | GUARD, WINDOW | 79 |
| REF | - | - | - | B | 679532-1 | INSERT, GUARD | 78 |
| 1 | 1 | 1 | - | C | 1-465184-0 | LUBRICATOR ASSY | 77 |
| | | | | | | | 76 |
| | | | | | | | 75 |
| | | | | | | | 74 |
| | | | | | | | 73 |
| REF | REF | REF | - | A | 458109-1 | WASHER, SPECIAL | 72 |
| REF | REF | REF | - | A | 690517-1 | SPACER | 71 |

QTY REQD PER ASSY — REVISION OF EACH ASSY NO (WHEN BLANK, USE DWG REVISION) — PARTS LIST

| -1 | LEADMAKER | | | | MECH POST FEED | | |
|---|---|---|---|---|---|---|---|
| -2 | BENCH MODEL K | | | | MECH PRE FEED | | |
| -3 | BENCH MODEL G | | | | MECH PRE FEED | | |
| REF | REF | REF | - | B | 22594-8 | NUT,HEX(1/2-20) | 70 |
| REF | REF | REF | - | B | 240628-1 | PLATE, ADJUSTMENT | 69 |
| REF | REF | REF | - | B | 240626-1 | SHAFT, PIVOT | 68 |
| REF | REF | REF | - | B | 240633-1 | BUSHING | 67 |
| REF | REF | REF | - | A | 455680-1 | LEVER, INTERMEDIATE | 66 |
| REF | REF | REF | - | B | 240629-1 | BLOCK, PIVOT | 65 |
| REF | REF | REF | - | A | 240632-2 | SCREW, ADJ FEED ROD | 64 |
| REF | REF | REF | - | B | 240659-3 | PIN, CAM ROLLER | 63 |
| REF | REF | REF | - | B | 240658-1 | ROLLER, CAM | 62 |
| REF | REF | REF | - | B | 454398-2 | ROD, FEED | 61 |
| REF | REF | REF | - | A | 454178-1 | GUIDE, FEED ROD | 60 |
| REF | REF | REF | - | C | 454220-1 | CAP, RAM | 59 |
| REF | REF | REF | - | D | 454485-1 | HOUSING | 58 |
| | | | | | | | 57 |
| 1 | 1 | 1 | - | B | 690542-2 | PAWL, FEED | 56 |
| REF | REF | REF | - | B | 240624-1 | PIN, FEED FINGER | 55 |
| REF | REF | REF | - | B | 691499-1 | SPRING, FEED FINGER | 54 |
| REF | REF | REF | - | B | 690541-1 | HOLDER, FEED FINGER | 53 |
| REF | REF | REF | - | A | 455679-1 | LEVER, TERMINAL FEED ARM | 52 |
| 1 | 1 | 1 | - | A | 811242-2 | BUMPER, HOLDDOWN | 51 |
| 1 | 1 | 1 | - | A | 690753-1 | SPACER, TONKER | 50 |
| 1 | - | - | - | B | 690602-6 | CAM, PRE-FEED 1 5/8 ST | 49 |
| - | 1 | - | - | B | 690602-5 | CAM, PRE-FEED 1 1/8 ST | 48 |
| - | - | 1 | - | B | 690501-4 | CAM, POST-FEED 1 5/8 ST | 47 |
| 1 | 1 | 1 | - | B | 459456-1 | APPLICATOR, BASIC (SUBASSY) | 46 |
| 1 | 1 | 1 | - | A | 690191-1 | PLUG, NYLON | 45 |
| 1 | 1 | 1 | - | C | 455673-1 | RAM | 44 |
| 1 | 1 | 1 | - | A | 690125-1 | WASHER, LAMINATED | 43 |
| 1 | 1 | 1 | - | A | 690124-1 | WASHER, RAM | 42 |
| 1 | 1 | 1 | - | A | 7-21002-9 | BOLT, CRIMPER(5/16x1.00) | 41 |
| | | | | | | | 40 |
| | | | | | | | 39 |
| 1 | 1 | 1 | - | A | 690223-2 | SPACER, INSULATION DISC | 38 |
| 1 | 1 | 1 | - | D | 354777-1 | WIRE DISC, PLASTIC | 37 |
| 1 | 1 | 1 | - | A | 22480-5 | WASHER, SPRING | 36 |
| 1 | 1 | 1 | - | B | 690212-1 | POST, RAM | 35 |
| 1 | 1 | 1 | - | B | 690786-1 | SUPPORT, TERMINAL | 34 |
| REF | REF | REF | - | D | 455675-1 | PLATE, BASE | 33 |
| 1 | 1 | 1 | - | A | 690432-3 | SCREW, ADJUSTMENT | 32 |
| | | | | | | | 31 |
| REF | REF | REF | - | B | 455689-1 | BLOCK, STRIP GUIDE ADJ | 30 |
| 1 | 1 | 1 | - | C | 455671-1 | PLATE, STRIP GUIDE | 29 |
| 1 | 1 | 1 | - | C | 1-455888-1 | SPACER, FRONT SHEAR DEP | 28 |
| 2 | 2 | 2 | - | A | 1-22284-0 | SPRING, DRAG | 27 |
| 1 | 1 | 1 | - | B | 690546-1 | LEVER, DRAG RELEASE | 26 |
| 1 | 1 | 1 | - | B | 240792-1 | DRAG, TERMINAL | 25 |
| 1 | 1 | 1 | - | D | 7-690504-5 | GUIDE, STRIP (REAR) | 24 |
| 1 | 1 | 1 | - | A | 690438-1 | GUIDE, STRIP (FRONT) | 23 |
| - | - | 1 | - | B | 690472-2 | STRIPPER | 22 |
| REF | REF | REF | - | A | 4-22284-9 | SPRING, FEED RETURN | 21 |
| 1 | 1 | - | - | A | 679218-1 | STRIPPER WIRE STOP ASSY | 20 |
| 1 | 1 | - | - | B | 458949-1 | STRIPPER | 19 |
| | | | | | | | 18 |
| | | | | | | | 17 |
| 1 | 1 | 1 | - | B | 691667-1 | GUARD, CHIP (FRONT) | 16 |
| | | | | | | | 15 |
| | | | | | | | 14 |
| | | | | | | | 13 |
| 1 | 1 | 1 | - | A | 5-22280-0 | SPRING, SHEAR | 12 |
| 1 | 1 | 1 | - | B | 690461-1 | STOP, SHEAR | 11 |
| 1 | 1 | 1 | - | C | 690459-1 | HOLDER, SHEAR (FRONT) | 10 |
| 1 | 1 | 1 | - | C | 462006-1 | SHEAR, FLOAT (FRONT) | 9 |
| 1 | 1 | 1 | - | C | 1-805887-0 | ANVIL | 8 |
| - | - | - | - | C | 1-805887-1 | ANVIL | 7 |
| | | | | | | | 6 |
| 1 | 1 | 1 | - | C | 2-455889-0 | DEPRESSOR, SHEAR (FRONT) | 5 |
| | | | | | | | 4 |
| | | | | | | | 3 |
| - | - | - | - | C | 2-456402-5 | CRIMPER, WIRE | 2 |
| 1 | 1 | 1 | - | C | 2-456404-2 | CRIMPER, WIRE | 1 |

QTY REQD PER ASSY — REVISION OF EACH ASSY NO (WHEN BLANK, USE DWG REVISION) — PARTS LIST

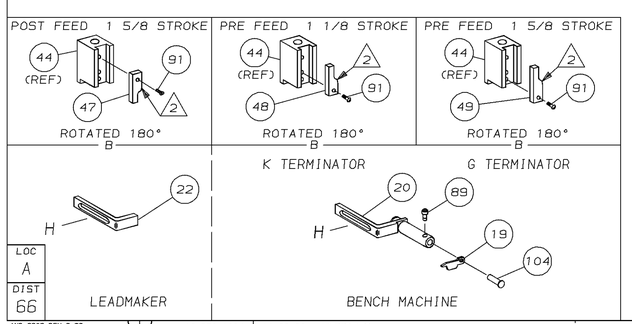


1. RECOMMENDED SPARE PARTS.
2. GREASE LIGHTLY.
3. GUARD MUST BE IN PLACE WHEN OPERATING APPLICATOR IN A BENCH MACHINE.
4. LUBRICATE DAILY USING NO. 20 MACHINE OIL.
5. ITEMS WITH QTY OF REF SPECIFIED (EXCEPT ITEMS 78 AND 79) ARE USED ON ITEM 46.
6. CUT TO LENGTH AT ASSY.
7. ITEM 2 AND ITEM 7 TO BE USED WITH TERMINAL NO 94-4813-10-1 FOR 30 AWG, (.055 CW).
8. ITEM 1 AND ITEM 8 TO BE USED WITH TERMINAL NO 94-4813-87-1 FOR 20 AWG, (.070 CW).

| P | F | LTR | REVISION RECORD | APP | DATE |
|---|---|---|---|---|---|
| | | A | RELEASED | CE | 11-94 |

DIMENSIONS IN INCHES. DO NOT SCALE PRINT.
TOLERANCES UNLESS OTHERWISE SPECIFIED,
2 PLC DEC ±-
3 PLC DEC ±-
4 PLC DEC ±-
ANGLES ±-
SURF TEXTURE. √
REMOVE BURRS, BREAK SHARP EDGES R.015 MAX

MATL - | HT TR - | FIN -

DR 9/19/94 M. O'BRINE | APP 9-19-94 T. ELBIN | CHK 9-19-94 C. ERISMAN | REL 12/6/94 B. MORGAN

AMP — AMP Incorporated Harrisburg, PA 17105-3608

NAME SIDE FEED HDM APPLICATOR | MACHINE REF MINI APPL | SCALE - | D | DWG NO 680130 | SHEET 1 OF 1 | REV A

THIS DRAWING IS A CONTROLLED DOCUMENT FOR AMP INCORPORATED. IT IS SUBJECT TO CHANGE AND THE CONTROLLING ENGINEERING ORGANIZATION SHOULD BE CONTACTED FOR THE LATEST REVISION.

THIS INFORMATION IS CONFIDENTIAL AND IS DISCLOSED TO YOU ON CONDITION THAT NO FURTHER DISCLOSURE IS MADE BY YOU TO OTHER THAN AMP PERSONNEL WITHOUT WRITTEN AUTHORIZATION FROM AMP INCORPORATED, HARRISBURG, PA.

# Mouser Electronics

Authorized Distributor

Click to View Pricing, Inventory, Delivery & Lifecycle Information:

TE Connectivity:

680130-1