PRODUCT NUMBER
SEE TABLE

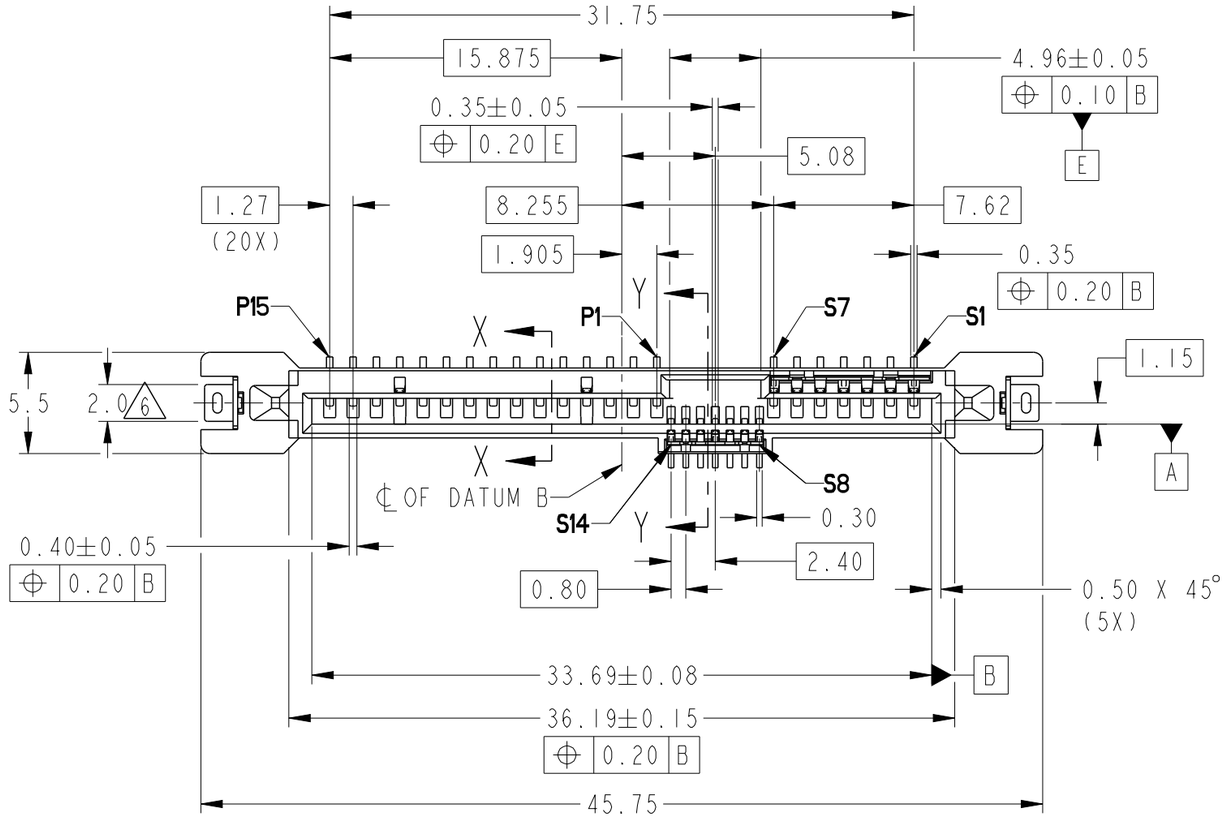

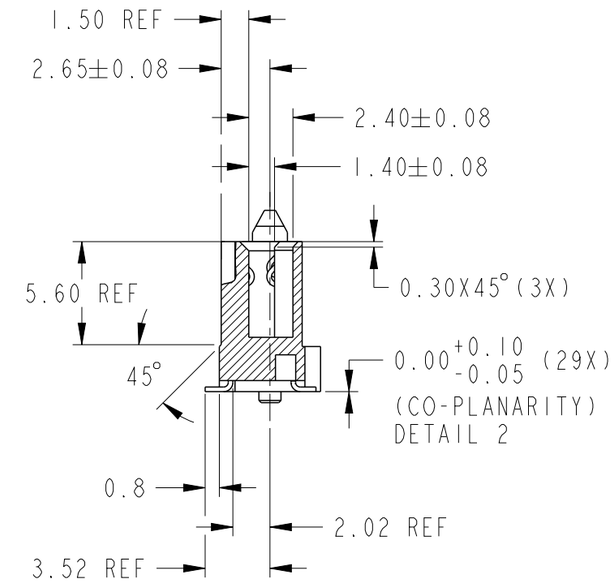

SECTION Y-Y

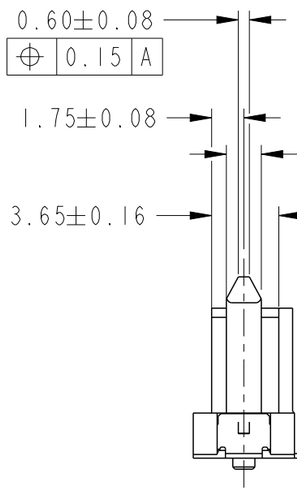

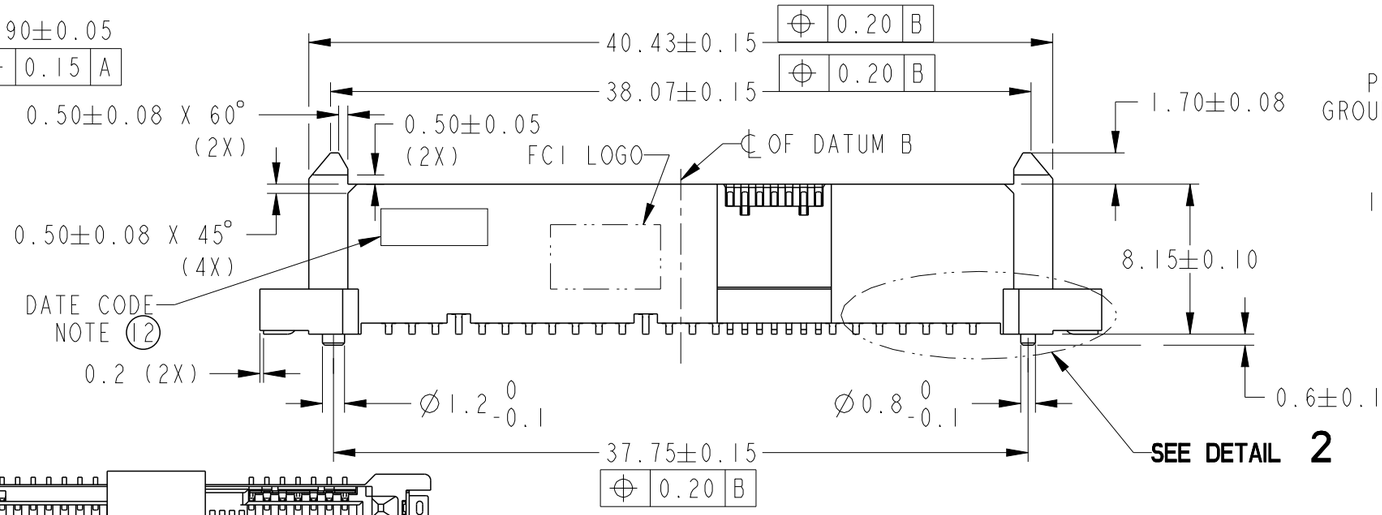

SECTION X-X

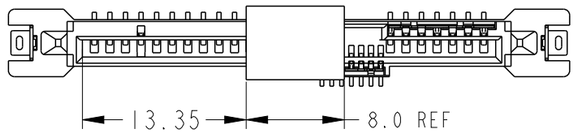

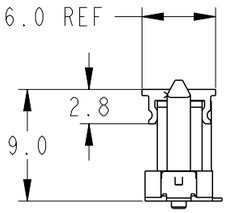

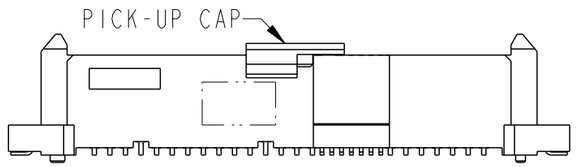

PART WITH PICK-UP CAP, SEE NOTE 4
SCALE 2:1

spec ref	-			dr	Roger Ng	2012/11/15	projection	mm	size A3	scale 3:1
tolerance std ISO 406 ISO 1101	TOLERANCES UNLESS OTHERWISE SPECIFIED			eng	Noorhazelinda,	2018/05/28			ecn no ELX-M-30284-1
				chr	-	-			
				appr	Koon-Poh Tay	2018/06/07	product family	SAS	rel level Released
surface	linear	0.X	±0.3	title	12G SAS RECEPTACLE VERTICAL SMT TYPE ASSY		dwg no 10120818	rev D
		0.XX	±0.20					
		0.XXX	±0.10					
ISO 1302	angular	0°	±2°	cat. no.	-		Product - Customer Drw	sheet 1 of 3

Amphenol FCi

© 2016 AFCI

Creo File - REV E - 2016-02-12

PRODUCT NUMBER	METAL CLIP	PLATING	PICK-UP CAP	PACKAGING	REMARKS	PRODUCT NUMBER	PLATING
10120818-001LF	2 PCS	NOTE 2	NO	TRAY	NOTE 8	10120818-401LF	NOTE 10
10120818-001CLF			YES		NOTE 4 & 8	10120818-401CLF	
10120818-001C-TRLF			YES	TAPE & REEL	NOTE 4 6 & 8	10120818-401C-TRLF	

NOTES:

1. MATERIAL :
   1) HOUSING : HIGH TEMP THERMOPLASTIC, UL 94V-0
      COLOR : BLACK
   2) TERMINAL : COPPER ALLOY
   3) HOLD DOWN : COPPER ALLOY

2. FINISH :
   1) TERMINAL : 30µ" Au PLATING (CONTACT POINT) OVER 50µ" NICKEL
   2) SOLDER TAIL : 100µ" MIN Sn OVER 50µ" NICKEL
   3) HOLD DOWN : 100µ" MIN Sn OVER 50µ" NICKEL

3. PER SFF REV 1.1, EXCEPT 0.8mm PITCH BUMP AREA.

4. PART WITH PICK-UP CAP, P/N XXXXXXXX-XXXCLF.

5. THE STD PACKAGING IS IN TRAY UNLESS OTHERWISE SPECIFIED.

6. PART NUMBER WITH SUFFIX "-TR" MEANS FOR TAPE & REEL PACKAGING (E.G. P/N: XXXXXXXX-XXXC-TRLF).

7. THE HOUSING WILL WITHSTAND EXPOSURE TO 260°C PEAK TEMPERATURE FOR 10 SECONDS IN A CONVECTION, INFRA-RED OR VAPOR PHASE REFLOW OVEN.

8. THIS PRODUCT MEETS EUROPEAN UNION DIRECTIVES AND OTHER COUNTRY REGULATIONS AS DESCRIBED IN GS-47-0004.

9. PART NUMBERS ENDING IN "LF" MEANS FOR NOTE 8 LEAD FREE IDENTIFICATION

10. FINISH :
    1) TERMINAL : 15µ" GXT PLATING (CONTACT POINT) OVER 50µ" NICKEL
    2) SOLDER TAIL : 100µ" MIN Sn OVER 50µ" NICKEL
    3) HOLD DOWN : 100µ" MIN Sn OVER 50µ" NICKEL

11. FINISH :
    1) TERMINAL : 30µ" GXT PLATING (CONTACT POINT) OVER 50µ" NICKEL
    2) SOLDER TAIL : 100µ" MIN Sn OVER 50µ" NICKEL
    3) HOLD DOWN : 100µ" MIN Sn OVER 50µ" NICKEL

12. A △C SYMBOL WILL BE NEXT TO ANY DIMENSION, VIEW, OR NOTE WHICH HAS BEEN MODIFIED WITH THE CURRENT DRAWING REVISION.

13. DATE CODE LOCATION. DATE CODE NO. YYWWD (E.G. 14225)

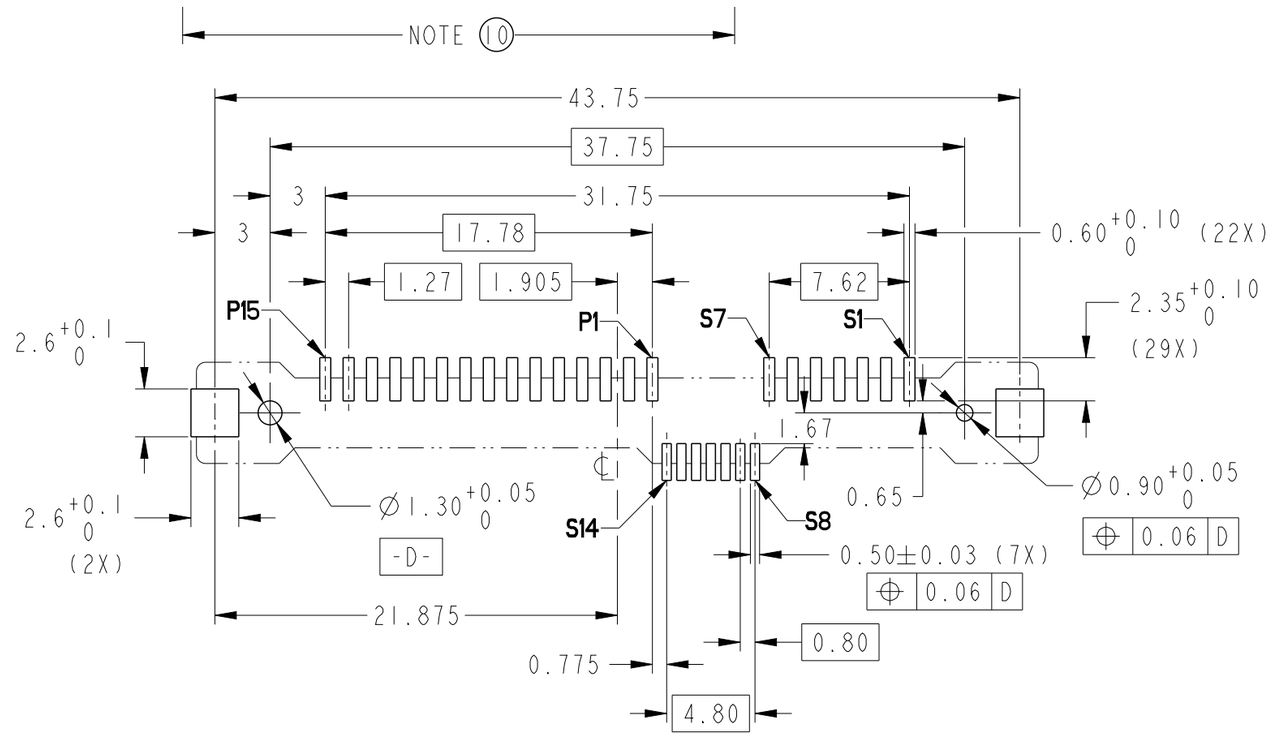

RECOMMENDED PCB LAYOUT

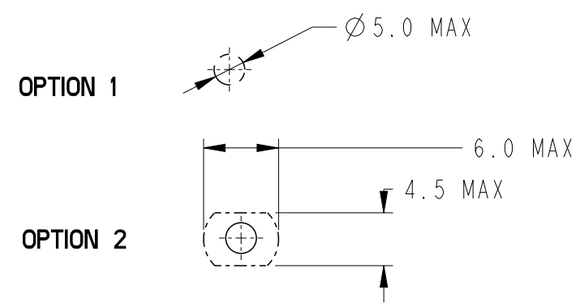

RECOMMENDED SUCTION HEAD SIZE

spec ref	-			dr	Roger Ng	2012/11/15	
tolerance std ISO 406 ISO 1101	TOLERANCES UNLESS OTHERWISE SPECIFIED			eng	Noorhazelinda,	2018/05/28	
				chr	-	-	
				appr	Koon-Poh Tay	2018/06/07	
surface - ISO 1302	linear	0.X	±0.3 △D				
		0.XX	±0.20				
		0.XXX	±0.10 △D				
	angular	0°	±2°				

projection | mm | size A3 | scale 3:1 | ecn no ELX-M-30284-1 | rel level Released | product family -

Amphenol FCi

title: 12G SAS RECEPTACLE VERTICAL SMT TYPE ASSY

dwg no 10120818 | rev D

cat. no. - | Product - Customer Drw | sheet 2 of 3

© 2016 AFCI

PRODUCT NUMBER	METAL CLIP	PLATING	PICK-UP CAP	PACKAGING	REMARKS
10120818-002LF	1 PCS	NOTE ②	NO	TRAY	NOTE ⑧
10120818-002CLF			YES		NOTE ④ & ⑧
10120818-002C-TRLF			YES	TAPE & REEL	NOTE ④ ⑥ & ⑧
10120818-402LF		NOTE ⑩	NO	TRAY	NOTE ⑧
10120818-402CLF			YES		NOTE ④ & ⑧
10120818-402C-TRLF			YES	TAPE & REEL	NOTE ④ ⑥ & ⑧
10120818-502LF		NOTE ⑪	NO	TRAY	NOTE ⑧
10120818-502CLF			YES		NOTE ④ & ⑧
10120818-502C-TRLF			YES	TAPE & REEL	NOTE ④ ⑥ & ⑧

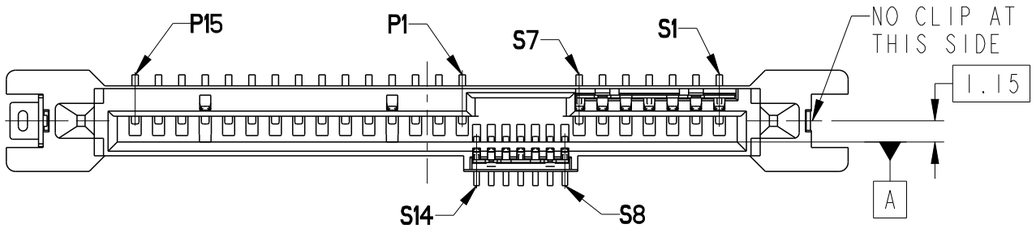

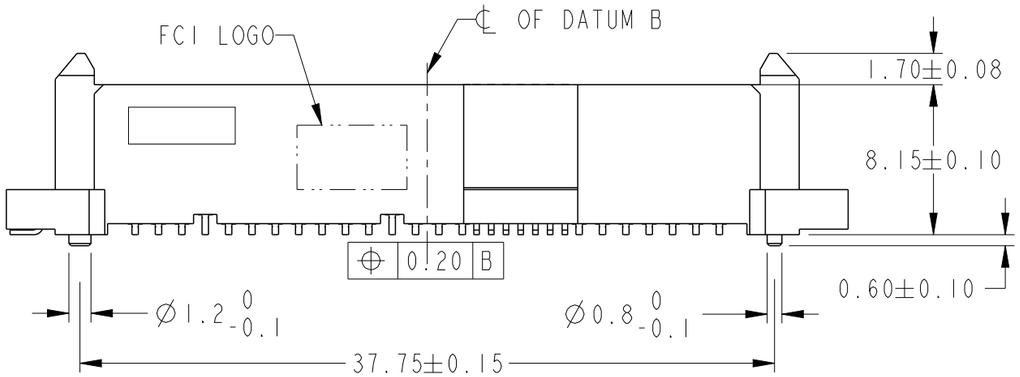

ALL OTHER DIMENSIONS, REFER TO SHEET 1

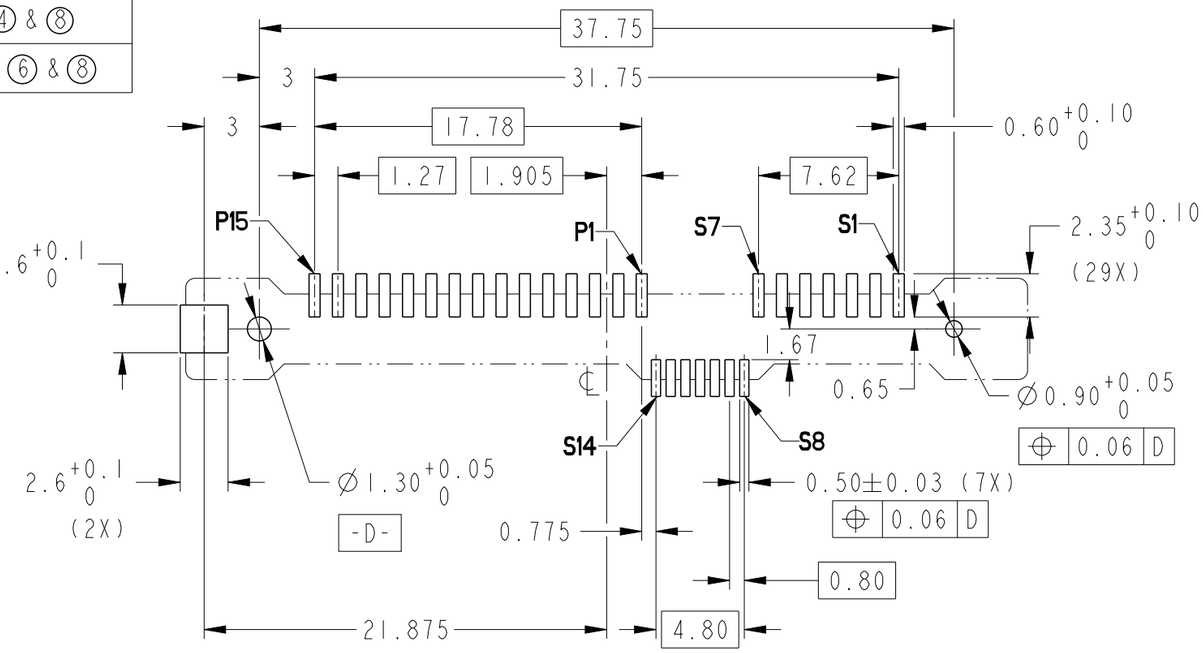

RECOMMENDED PCB LAYOUT

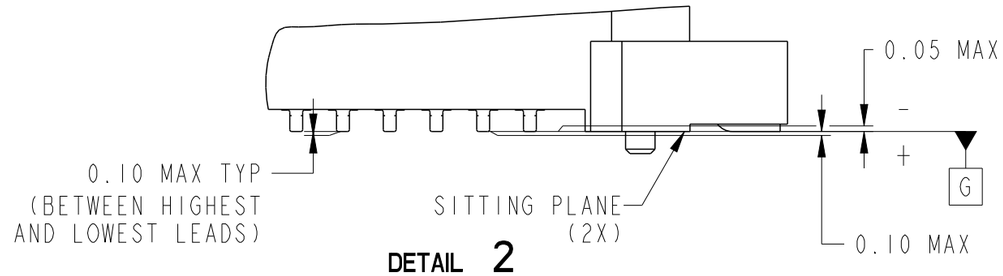

DETAIL 2
SCALE 6:1

spec ref	-	dr	Roger Ng	2012/11/15	projection	mm	size A3 / scale 3:1
tolerance std: ISO 406, ISO 1101	TOLERANCES UNLESS OTHERWISE SPECIFIED	eng	Noorhazelinda,	2018/05/28			ecn no ELX-M-30284-1
		chr	-	-			
		appr	Koon-Poh Tay	2018/06/07	product family -		rel level Released
surface - ISO 1302	linear 0.X ±0.3 D; 0.XX ±0.20; 0.XXX ±0.10 D; angular 0° ±2°	title	12G SAS RECEPTACLE VERTICAL SMT TYPE ASSY		dwg no 10120818		rev D
		cat. no. -	Product - Customer Drw		sheet 3 of 3		

© 2016 AFCI

Creo File - REV E - 2016-02-12

Mouser Electronics

Authorized Distributor

Click to View Pricing, Inventory, Delivery & Lifecycle Information:

FCI / Amphenol:

10120818-001C-TRLF 10120818-002LF 10120818-001CLF 10120818-001LF 10120818-002C-TRLF