THIS DRAWING IS UNPUBLISHED. RELEASED FOR PUBLICATION -,- .
© COPYRIGHT 2005 BY TYCO ELECTRONICS CORPORATION. ALL RIGHTS RESERVED.

LOC	DIST
AD	25

REVISIONS

P	LTR	DESCRIPTION	DATE	DWN	APVD
	P	REV PER OCO-07-000286	17JAN07	DKH	DRD
	P1	REVISED PER ECO-09-022424	21SEP09	KK	AEG

1. HOUSING: HIGH TEMPERATURE THERMOPLASTIC, COLOR NATURAL.
PIN CONTACTS: PHOSPHOR BRONZE.
GROUND BUSSES: PHOSPHOR BRONZE.

2. PIN CONTACTS: 0.00076[.000030] MIN GOLD IN CONTACT AREA, 0.00254–0.00762[.000100–.000300] TIN–LEAD ON SOLDER TAIL, ALL OVER 0.00127–0.00254[.000050–.000100] NICKEL ON ENTIRE CONTACT.

GROUND BUSSES: 0.00076[.000030] MIN GOLD IN CONTACT AREA, 0.00254–0.00762[.000100–.000300] TIN–LEAD ON SOLDER TAIL, ALL OVER 0.00127–0.00254[.000050–.000100] NICKEL ON ENTIRE BUS.

3. DATE CODE MARKED IN AREA INDICATED.

4. OBSOLETE PARTS: OBSOLETE CIS STREAMLINING PER D.RENAUD/D.SINISI

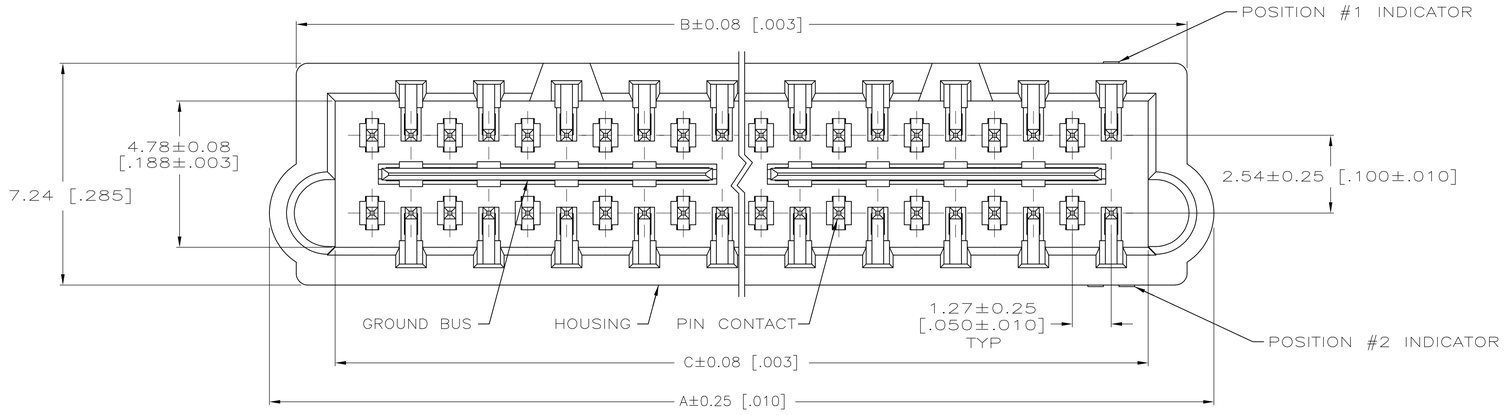

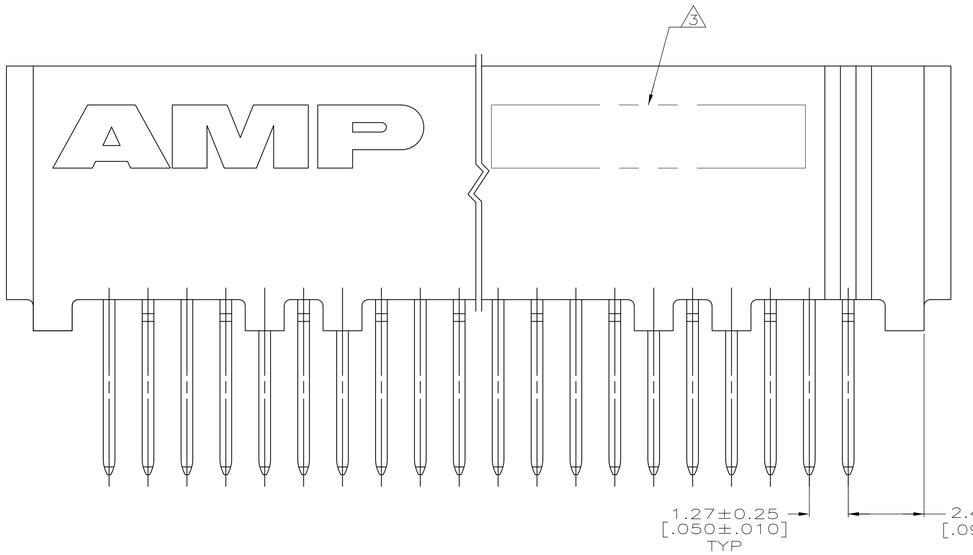

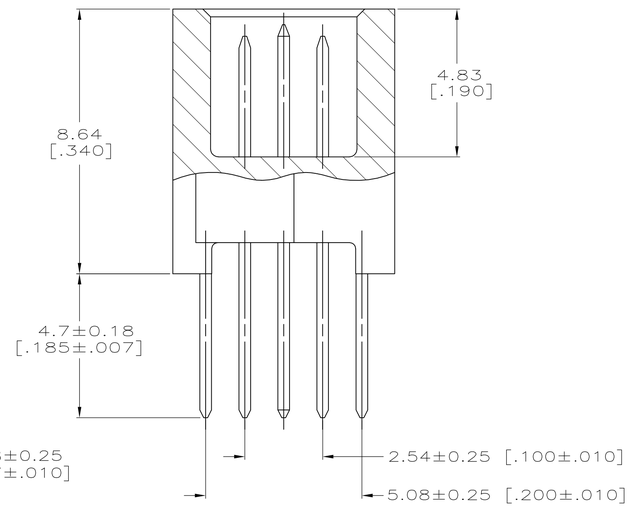

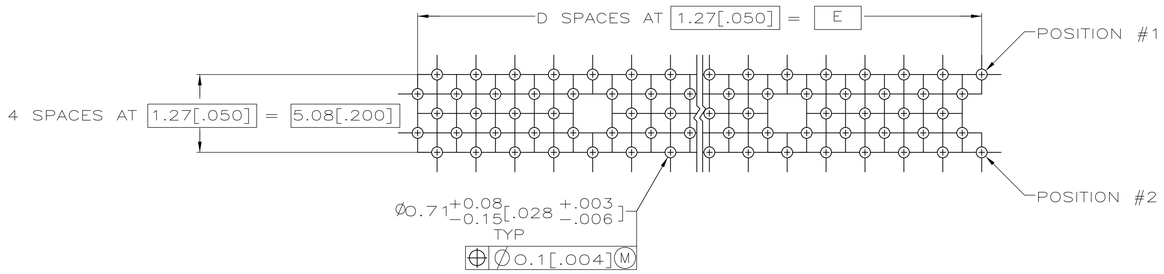

RECOMMENDED PC BOARD HOLE LAYOUT
(VIEWED FROM CONNECTOR SIDE)
SCALE 5:1

	OBSOLETE	151.13[5.950]	119	153.62[6.048]	156.08[6.145]	157.84[6.214]	240	1–536273–1
	OBSOLETE	138.43[5.450]	109	140.92[5.548]	143.38[5.645]	145.14[5.714]	220	1–536273–0
	OBSOLETE	125.73[4.950]	99	128.22[5.048]	130.68[5.145]	132.44[5.214]	200	536273–9
	OBSOLETE	113.03[4.450]	89	115.52[4.548]	117.98[4.645]	119.74[4.714]	180	536273–8
	OBSOLETE	100.33[3.950]	79	102.82[4.048]	105.28[4.145]	107.04[4.214]	160	536273–7
	OBSOLETE	87.63[3.450]	69	90.12[3.548]	92.58[3.645]	94.34[3.714]	140	536273–6
		74.93[2.950]	59	77.42[3.048]	79.88[3.145]	81.64[3.214]	120	536273–5
		62.23[2.450]	49	64.72[2.548]	67.18[2.645]	68.94[2.714]	100	536273–4
	OBSOLETE	49.53[1.950]	39	52.02[2.048]	54.48[2.145]	56.24[2.214]	80	536273–3
	OBSOLETE	36.83[1.450]	29	39.32[1.548]	41.78[1.645]	43.54[1.714]	60	536273–2
4	SUPERSEDED	24.13[.950]	19	26.62[1.048]	29.08[1.145]	30.84[1.214]	40	536273–1
		E	D	C	B	A	NO OF POS	PART NUMBER

THIS DRAWING IS A CONTROLLED DOCUMENT.

DIMENSIONS: mm [INCHES]

TOLERANCES UNLESS OTHERWISE SPECIFIED:
0 PLC ± –
1 PLC ± –
2 PLC ± –
3 PLC ± 0.13 [.005]
4 PLC ± –
ANGLES ± –

MATERIAL 1 –
FINISH 2 –

DWN J.GERACE 2-12-92
CHK J.GERACE 2-12-92
APVD J.GERACE 2-12-92
PRODUCT SPEC 108-1272
APPLICATION SPEC 114-11005
WEIGHT –
CUSTOMER DRAWING

Tyco Electronics
Tyco Electronics Corporation
Harrisburg, PA 17105-3608

NAME
PLUG ASSEMBLY, 10.92[.430]
STACK, 4.7[.185] TAIL,
BOARD TO BOARD, MICRO-STRIP

SIZE	CAGE CODE	DRAWING NO	RESTRICTED TO
A1	00779	C-536273	–

SCALE	SHEET	REV
10:1	1 OF 1	P1

Mouser Electronics

Authorized Distributor

Click to View Pricing, Inventory, Delivery & Lifecycle Information:

TE Connectivity:

536273-4