THIS DRAWING IS UNPUBLISHED. RELEASED FOR PUBLICATION -,- .
© COPYRIGHT - By - ALL RIGHTS RESERVED.

REVISIONS

P	LTR	DESCRIPTION	DATE	DWN	APVD
	AA	REVISED PER ECO-14-015277	13FEB2015	NK	DR
	AA1	REVISED PER ECO-17-007400	29NOV2017	RS	DR

AMP WIRE RANGE	Listed FILE E13288	LR7189 Certified
22-16 AWG SOLID OR STRANDED	22-16 AWG SOLID OR STRANDED	22-16 AWG SOLID OR STRANDED

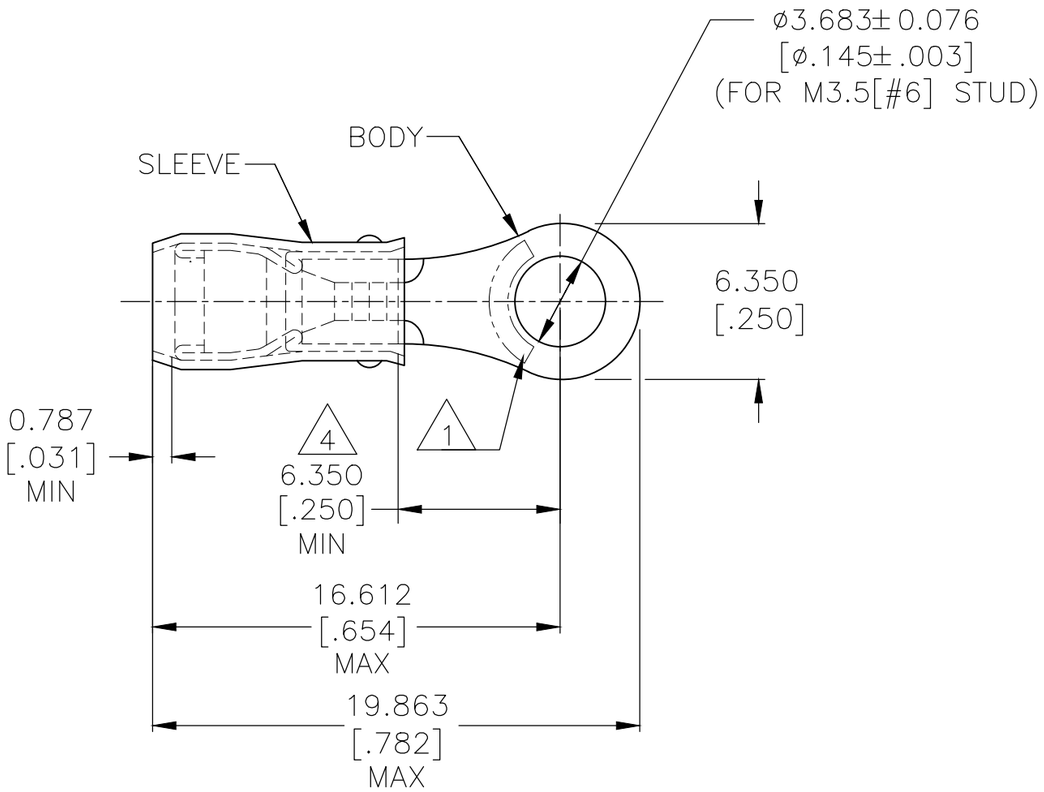

1. STAMP AMP 22-18* APPROX AS SHOWN 22-16 TERMINALS ARE STAMPED 22-18 IN ACCORDANCE WITH MILITARY SPEC MIL-T-7928 COMMERCIAL WIRE RANGE IS 22-16.
2. WIRE INSULATION: ø2.032-3.175[ø.080-.125].
3. BODY MATERIAL THK: 0.787±0.051[.031±.002].
4. DIMENSION APPLIES FROM EDGE OF METAL WIRE BARREL TO CENTER OF STUD HOLE.
5. BODY - COPPER PER ASTM B-152 SLEEVE - NYLON.
6. BODY - TIN PLATE PER ASTM B545, 0.00254[.000100] MIN EXT THK SLEEVE- COLOR, RED.

MILITARY P/N AND CLASS	QTY	PACKAGE TYPE	PART NUMBER
--	100	LOOSE PIECE, BOX	7-51863-1
MS25036-102 CLASS 2	5000	ON TAPE, REEL	51863-1
MS25036-102 CLASS 1 & 2	1000	LOOSE PIECE	51863

AMP INCORPORATED
CUSTOMER SERVICE SYSTEMS

FOR ADDITIONAL PRODUCT INFORMATION OR COPIES OF DRAWINGS AND TECHNICAL DOCUMENTS	PRODUCT INFORMATION CENTER 1-800-522-6752
FOR APPLICATION TOOLING INFORMATION	TOOLING ASSISTANCE CENTER 1-800-722-1111
FOR ORDER ENTRY	1-800-526-5142

THIS DRAWING IS A CONTROLLED DOCUMENT FOR AMP INCORPORATED. IT IS SUBJECT TO CHANGE AND THE CONTROLLING ENGINEERING ORGANIZATION SHOULD BE CONTACTED FOR THE LATEST REVISION.

MAX RECOMMENDED OPERATING TEMPERATURE: 105°C[221°F] MAX

VOLTAGE RATING: 300V MAX

CIRCULAR MIL AREA: 0.26-1.65mm²[509-3260]CIR MILS SOLID OR STRANDED

THIS DRAWING IS A CONTROLLED DOCUMENT.

DIMENSIONS: mm [INCHES]

TOLERANCES UNLESS OTHERWISE SPECIFIED:

0 PLC	± -
1 PLC	± -
2 PLC	± -
3 PLC	± 0.127[.005]
4 PLC	± -
ANGLES	± -

MATERIAL 5

FINISH 6

DWN	DK SCHRUM	9/8/93
CHK	RE HERSEY	9/8/93
APVD	M BARNABA	9/8/93
PRODUCT SPEC	UL 486 A-B	
APPLICATION SPEC	114-2157	
WEIGHT	-	

TE Connectivity

NAME: TERMINAL, RING TONGUE, PIDG WIRE SIZE: 22-16 AWG

SIZE	CAGE CODE	DRAWING NO	RESTRICTED TO
A3	00779	C-51863	-

CUSTOMER DRAWING | SCALE NTS | SHEET 1 OF 2 | REV AA1

1470-19 (1/15)

THIS DRAWING IS UNPUBLISHED. RELEASED FOR PUBLICATION –,– .
© COPYRIGHT – By – ALL RIGHTS RESERVED.

REVISIONS

P	LTR	DESCRIPTION	DATE	DWN	APVD
	–	SEE SHEET 1	–	–	–

AMP
WIRE RANGE

SEE TABLE
STRANDED

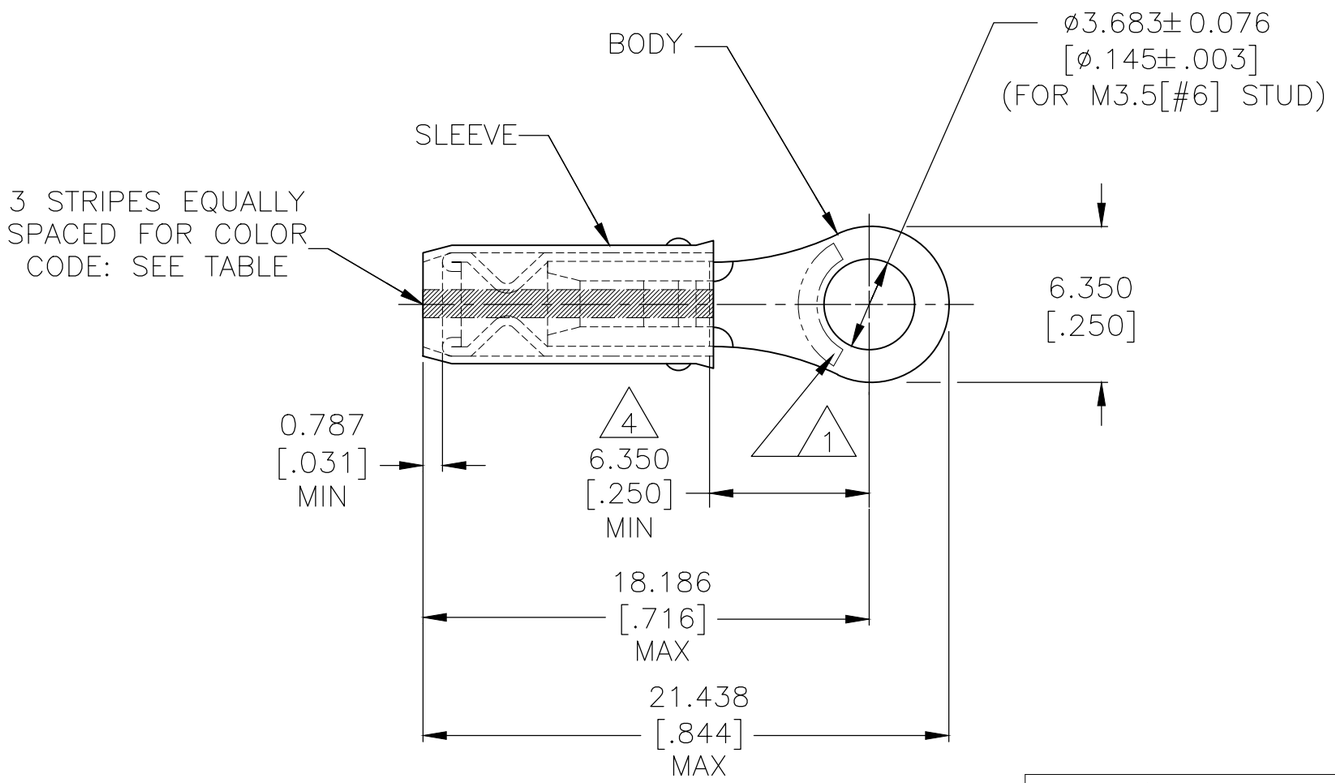

1. STAMP AMP ⊏⊐ APPROX AS SHOWN SEE TABLE BELOW.
2. WIRE INSULATION : ø0.965–2.794[ø.038–.110] FOR 22 AWG
   ø1.168–2.794[ø.046–.110] FOR 20 AWG
   ø1.422–2.794[ø.056–.110] FOR 18 AWG.
3. BODY MATERIAL THK: 0.787±0.051[.031±.002].
4. DIMENSION APPLIES FROM EDGE OF METAL WIRE BARREL TO CENTER OF STUD HOLE.
5. BODY – COPPER PER ASTM B–152
   SLEEVE – NYLON.
6. BODY – TIN PLATE PER ASTM B545, 0.00254[.000100] MIN EXT. THK
   SLEEVE – COLOR – RED.
7. NOTE DELETED

MILITARY P/N AND CLASS	STRIPE COLOR	1 STAMPING	WIRE SIZE	QTY	PACKAGE TYPE	PART NO.
M7928/1–31 CLASS 2	WHITE	18*	18	5000	ON TAPE, REEL	51863–7
M7928/1–13 CLASS 2	GREEN	22*	22	5000	ON TAPE, REEL	51863–5
M7928/1–31 CLASS 1 & 2	WHITE	18*	18	1000	LOOSE PIECE	51863–4
M7928/1–22 CLASS 1 & 2	RED	20*	20	1000	LOOSE PIECE	51863–3
M7928/1–13 CLASS 1 & 2	GREEN	22*	22	1000	LOOSE PIECE	51863–2

AMP INCORPORATED
CUSTOMER SERVICE SYSTEMS

FOR ADDITIONAL PRODUCT INFORMATION OR COPIES OF DRAWINGS AND TECHNICAL DOCUMENTS	PRODUCT INFORMATION CENTER 1–800–522–6752
FOR APPLICATION TOOLING INFORMATION	TOOLING ASSISTANCE CENTER 1–800–722–1111
FOR ORDER ENTRY	1–800–526–5142

THIS DRAWING IS A CONTROLLED DOCUMENT FOR AMP INCORPORATED. IT IS SUBJECT TO CHANGE AND THE CONTROLLING ENGINEERING ORGANIZATION SHOULD BE CONTACTED FOR THE LATEST REVISION.

MAX RECOMMENDED OPERATING TEMPERATURE: 105°C[221°F] MAX

VOLTAGE RATING: 300V MAX

CIRCULAR MIL AREA: 0.26–1.65mm² [509–3260]CIR MILS SOLID OR STRANDED

THIS DRAWING IS A CONTROLLED DOCUMENT.

DIMENSIONS: mm [INCHES]

TOLERANCES UNLESS OTHERWISE SPECIFIED:

0 PLC	± –
1 PLC	± –
2 PLC	± –
3 PLC	± 0.127[.005]
4 PLC	± –
ANGLES	± –

MATERIAL 5

FINISH 6

DWN	DK SCHRUM	9/8/93
CHK	RE HERSEY	9/8/93
APVD	M BARNABA	9/8/93
PRODUCT SPEC	–	
APPLICATION SPEC	NOT AVAILABLE	
WEIGHT	–	

TE Connectivity

NAME: TERMINAL, RING TONGUE, PIDG
WIRE SIZE: 22–16 AWG

SIZE	CAGE CODE	DRAWING NO	RESTRICTED TO
A3	00779	C–51863	–

CUSTOMER DRAWING | SCALE NTS | SHEET 2 OF 2 | REV AA1

1470–19 (1/15)

Mouser Electronics

Authorized Distributor

Click to View Pricing, Inventory, Delivery & Lifecycle Information:

TE Connectivity:
51863-5