THIS DRAWING IS UNPUBLISHED. RELEASED FOR PUBLICATION 20
© COPYRIGHT 20 BY - ALL RIGHTS RESERVED.

REVISIONS

P	LTR	DESCRIPTION	DATE	DWN	APVD
	J	REDRAWN /REVISED PER ECO-17-001745	22NOV2017	KS	JO

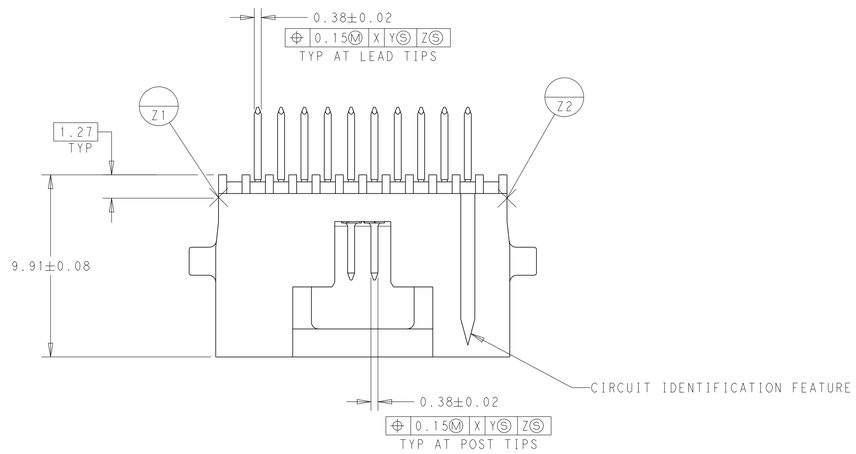

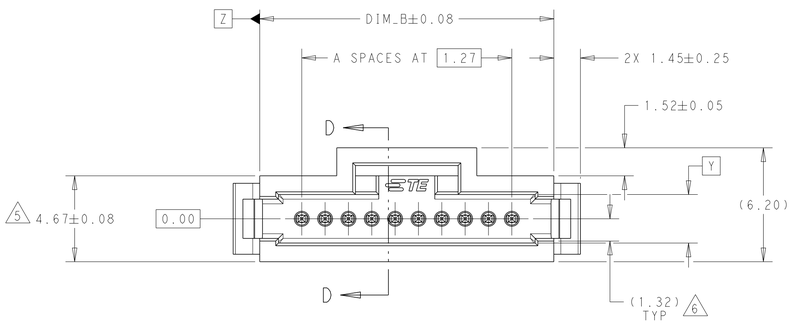

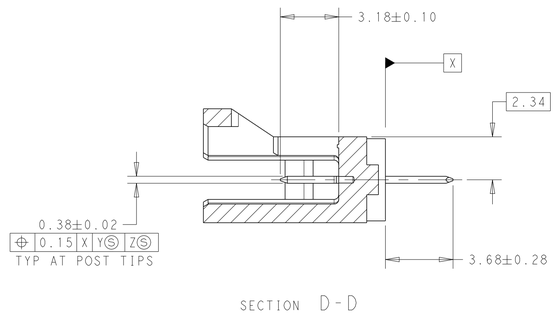

1. FLAME RATARDANT THERMOPLASTIC, COLOR-BLACK
2. CONTACT:COPPER ALLOY
3. 0.76µm GOLD ON CONTACT AREA, SOLDER LEADS PARTS WITH 3.81µm MIN TIN-LEAD, ALL OVER 1.27µm NICKEL
4. NOTE DELETED.
5. DIMENSION APPLIES AT BASE OF SHROUD
6. THE NOTED DIMENSIONS APPLY AT THE INTERSECTION OF THE POST AND HOUSING
7. NOTE DELETED.
8. 0.76µm GOLD ON CONTACT AREA, SOLDER LEADS PARTS WITH 3.81µm MIN TIN, ALL OVER 1.27µm NICKEL
9. FINISH: 0.03µm MIN GOLD ON GOLD PLATED AREA, 3.81µm MATTE TIN-LEAD ON TIN PLATED AREA. UNDER PLATING TO BE 1.27µm NICKEL ON ENTIRE CONTACT
10. FINISH: 0.03µm MIN GOLD ON GOLD PLATED AREA, 3.81µm MATTE TIN ON TIN PLATED AREA. UNDER PLATING TO BE 1.27µm NICKEL ON ENTIRE CONTACT
11. NOTE DELETED.
12. NOTE DELETED.
13. NOTE DELETED.

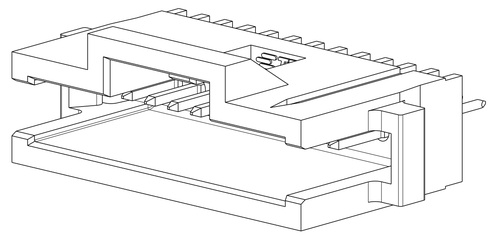

SCALE 8:1

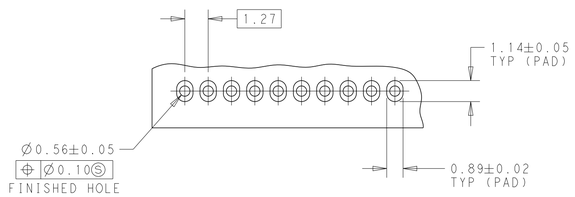

RECOMMENDED HOLE PATTERN

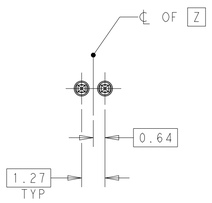

BASIC DIMENSION FOR ODD NO OF SPACES (SEE TABLE)

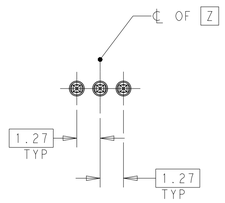

BASIC DIMENSION FOR EVEN NO OF SPACES (SEE TABLE)

FINISH	DIM_B	A SPACES	NO OF POSN	PART NUMBER
10	18.54	11	12	7-104804-3
	22.35	14	15	7-104804-2
	35.05	24	25	7-104804-1
8	18.54	11	12	5-104804-3
	22.35	14	15	5-104804-2
	35.05	24	25	5-104804-1

FINISH	DIM_B	A SPACES	NO OF POSN	PART NUMBER
9	18.54	11	12	2-104804-3
	22.35	14	15	2-104804-2
	35.05	24	25	2-104804-1
3	18.54	11	12	104804-3
	22.35	14	15	104804-2
	35.05	24	25	104804-1

THIS DRAWING IS A CONTROLLED DOCUMENT.

DIMENSIONS: mm

TOLERANCES UNLESS OTHERWISE SPECIFIED:
0 PLC ±-
1 PLC ±0.3
2 PLC ±0.13
3 PLC ±-
4 PLC ±-
ANGLES ±0.5°

MATERIAL 1 2

FINISH SEE TABLE

DWN K.SHRISHAIL 22NOV2017
CHK J.OLSON 22NOV2017
APVD J.OLSON 22NOV2017
PRODUCT SPEC 108-1093
APPLICATION SPEC 114-25031
WEIGHT -

TE Connectivity

NAME HEADER ASSEMBLY, SINGLE ROW WITH LATCHES, AMPMODU SYSTEM 50
-

SIZE	CAGE CODE	DRAWING NO	RESTRICTED TO
A1	00779	C-104804	-

CUSTOMER DRAWING | SCALE 6:1 | SHEET 1 OF 1 | REV J

4805 (3/13)

Mouser Electronics

Authorized Distributor

Click to View Pricing, Inventory, Delivery & Lifecycle Information:

TE Connectivity:

104804-3