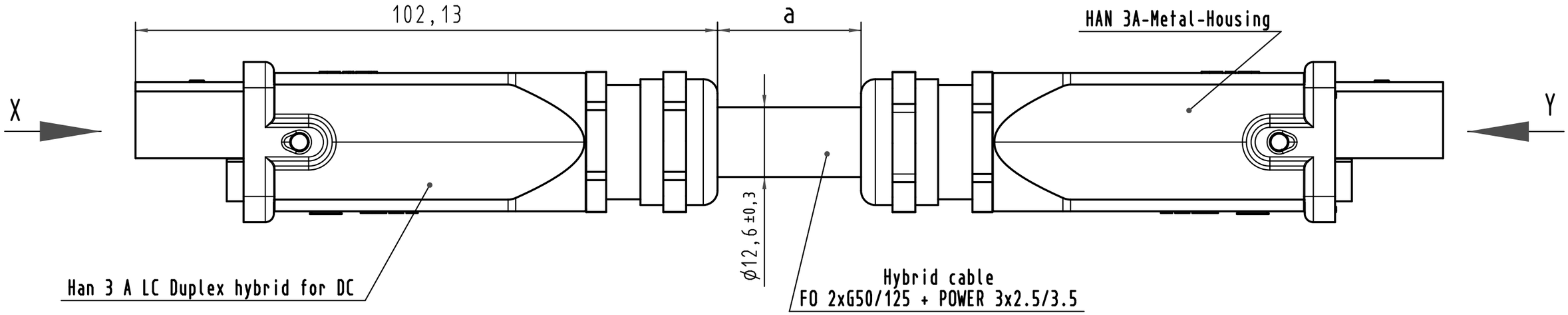


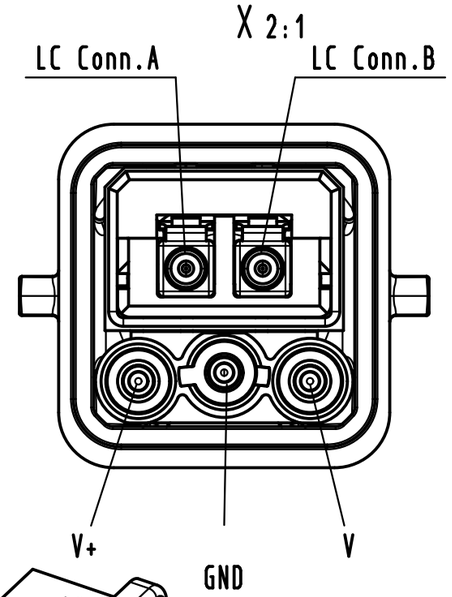


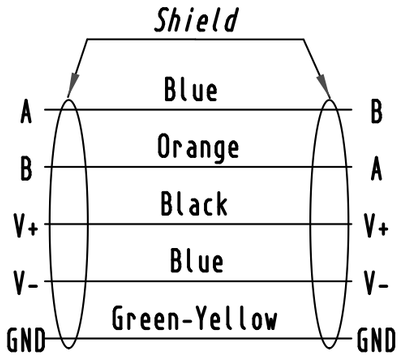


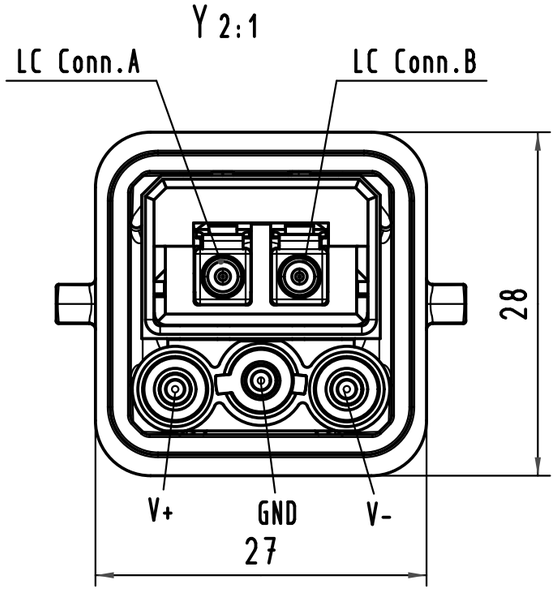


-Insertion loss must be tested 100%
-Return loss must be tested at least by random samples

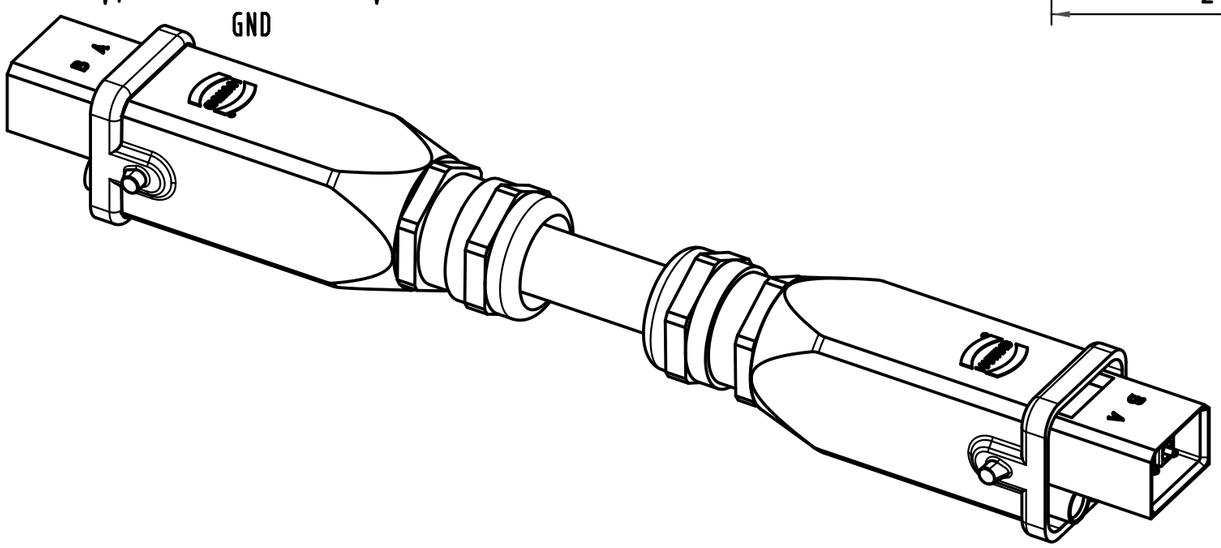


| Cont No. | Type of cable | Part-No. | Dim. a |
|---|---|---|---|
| 4 | Hybrid cable 2xFO+3x2.5/3.5 | 33 57 211 020 5002 | 20 (±0.20)m |
| 3 | Hybrid cable 2xFO+3x2.5/3.5 | 33 57 211 010 5002 | 10 (±0.10)m |
| 2 | Hybrid cable 2xFO+3x2.5/3.5 | 33 57 211 005 5002 | 5 (±0.05)m |
| 1 | Hybrid cable 2xFO+3x2.5/3.5 | 33 57 211 001 5002 | 1 (±0.01)m |

All Dimensions in mm
Original Size DIN A 3

Techn. Character.

Nicht tolerierte Maße/

| | Dat. | Name |
|---|---|---|
| Detail. | 06.02.09 | MR |
| Insp. | | |
| Stand. | | |

Maßstab/*Scale* /

Hybrid cable assembly,
FO 2xG50/125 + POWER 3x2.5/3.5,
2xHAN3A, LC duplex MM, 3xpower DC

S468A

Mod. Dat. Name

HARTING Electronics GmbH & Co. KG
D-32339 ESPELKAMP

TB 33 57 211 xxx 5002

Blatt/*page*

Sub. Sub

Alle Rechte vorbehalten/ *All rights reserved*

# Mouser Electronics

Authorized Distributor

Click to View Pricing, Inventory, Delivery & Lifecycle Information:

HARTING:

33572110015002 33572110055002 33572110105002 33572110205002