THIS DRAWING IS UNPUBLISHED. RELEASED FOR PUBLICATION -
© COPYRIGHT - Tyco Electronics AMP GmbH ALL RIGHTS RESERVED.

LOC	DIST
IS	-

REVISIONS

P	LTR	DESCRIPTION	DATE	DWN	APVD
	A2	Update drawing - note 11 added	20FEB2012	MS	MG

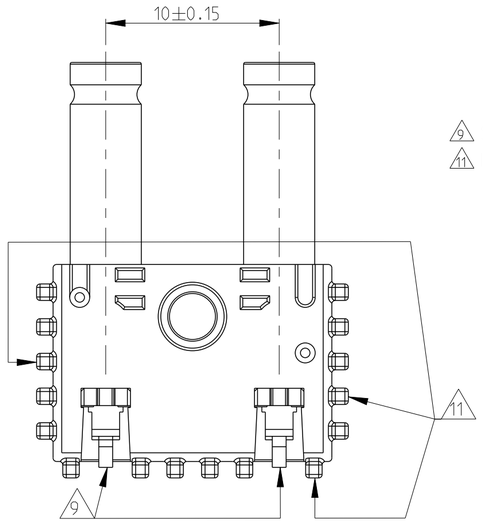

9 Signal contact solder lead

11 Body housing could differ from drawing in term of number of pins, 14 pins MIN are allowed

Section A-A

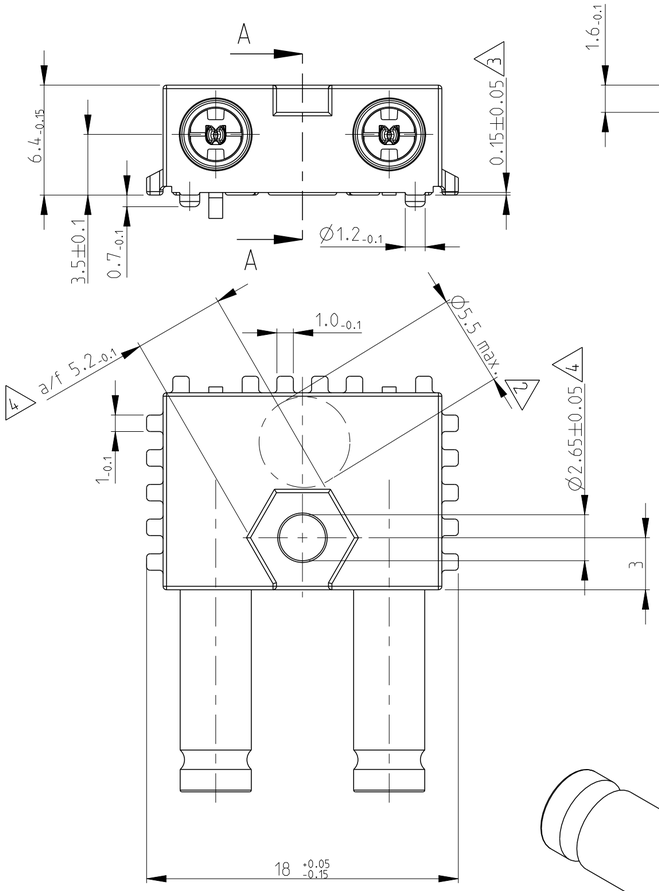

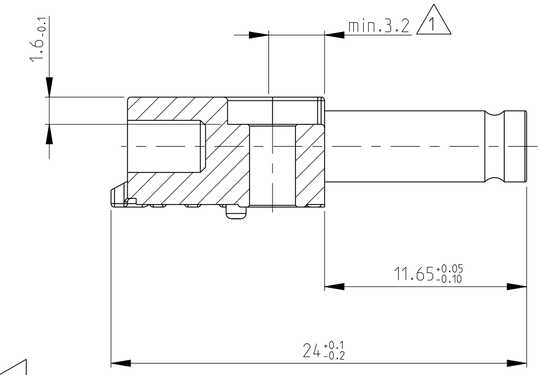

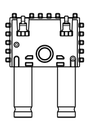

1:1

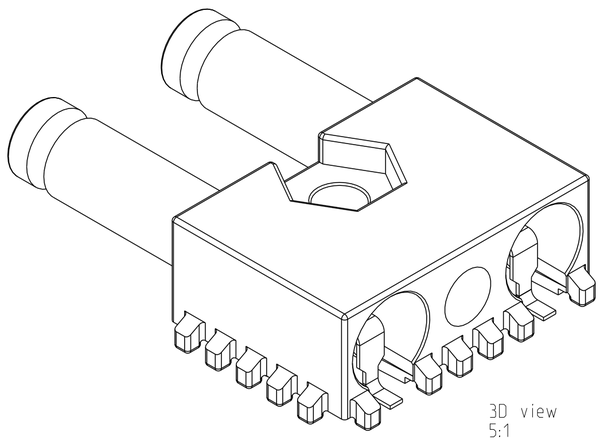

3D view
5:1

PC-Board layout

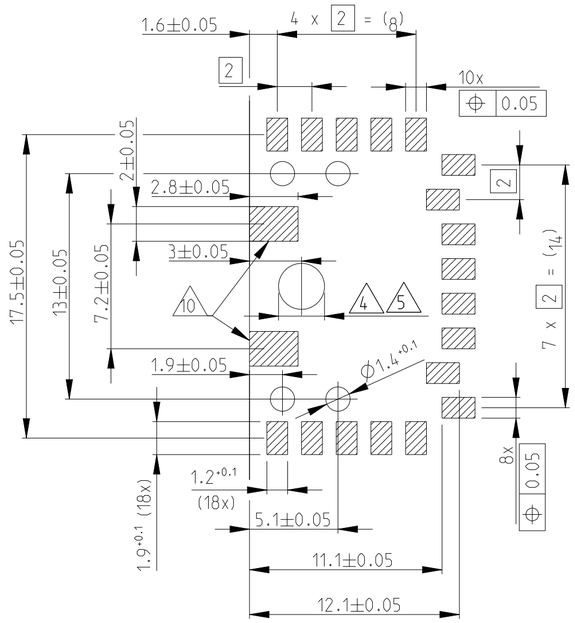

10 Optional solder pads

Soldering surfaces

Packaging: Tape & Reel

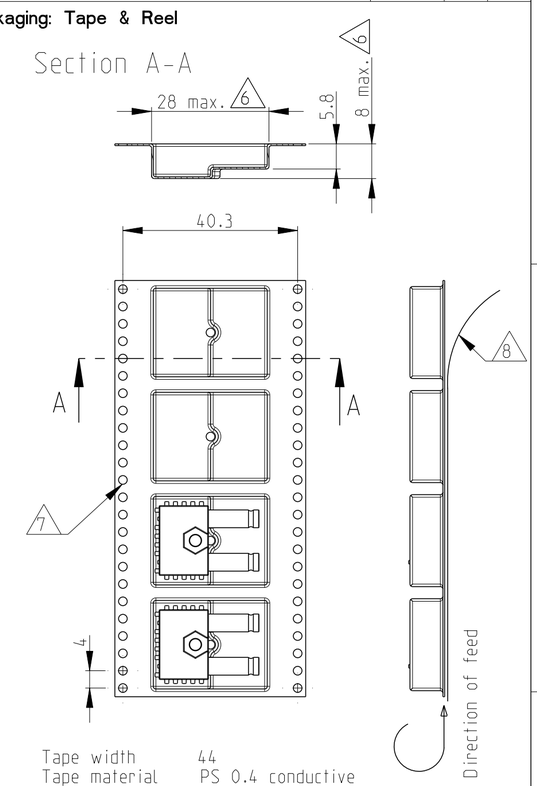

Tape width	44
Tape material	PS 0.4 conductive
Cavity pitch	24
Reel Ø	330
Pieces/reel	350

Further features according EIA-481-3

8 cover tape

7 Round sprocket holes

6 Reference dimension for tape feeder clearance only

Coplanarity of all SMD solder terminals: 0.15 max.
Component weight: 6.3 gram max.

5 Diameter depending on placement tolerances

4 Hole suitable for screw M2.5

3 Stand off

2 Plane surface for automatic placement

1 Gravity point

TE nr	Decription	Material	Plating
619400-1	Dielectric	PCT	-
	Center conductor	Bronze	Contact area: min. 1 µm Au (Gold) over min. 1µm Ni (Nickel) Solder area: min. 3 µm Sn (Tin)
	Outer conductor	Brass	Min. 0.1 µm Au (Gold) over min. 2µm NiP (Nickel-Phosphorum) over min 0.2 Cu (Copper) (all the plating thickness are measured in contact area)
	Body	ZnAl4	Min. 2 µm Sn (Tin)

THIS DRAWING IS A CONTROLLED DOCUMENT.

DIMENSIONS: mm

TOLERANCES UNLESS OTHERWISE SPECIFIED:
0 PLC ±
1 PLC ±±
2 PLC ±±±
3 PLC ±±±±
4 PLC ±±±±±
ANGLES ±

MATERIAL -

FINISH -

DWN A.Mariotti 03APR2009
CHK D.Bozzer 03APR2009
APVD -
PRODUCT SPEC 108-90019
APPLICATION SPEC -
WEIGHT -

TE Connectivity

NAME 1.0-2.3 Jack 2 posn Siemax SMD solder -

SIZE	CAGE CODE	DRAWING NO	RESTRICTED TO
A2	00779	C-619400	-

CUSTOMER DRAWING | SCALE 4:1 | SHEET 1 OF 1 | REV A2

Mouser Electronics

Authorized Distributor

Click to View Pricing, Inventory, Delivery & Lifecycle Information:

TE Connectivity:

619400-1