THIS DRAWING IS UNPUBLISHED. RELEASED FOR PUBLICATION -,- .
© COPYRIGHT - By - ALL RIGHTS RESERVED.

LOC	DIST
G	14

REVISIONS

P	LTR	DESCRIPTION	DATE	DWN	APVD
	L2	REVISED PER ECO-12-007718	07MAY12	KH	DR

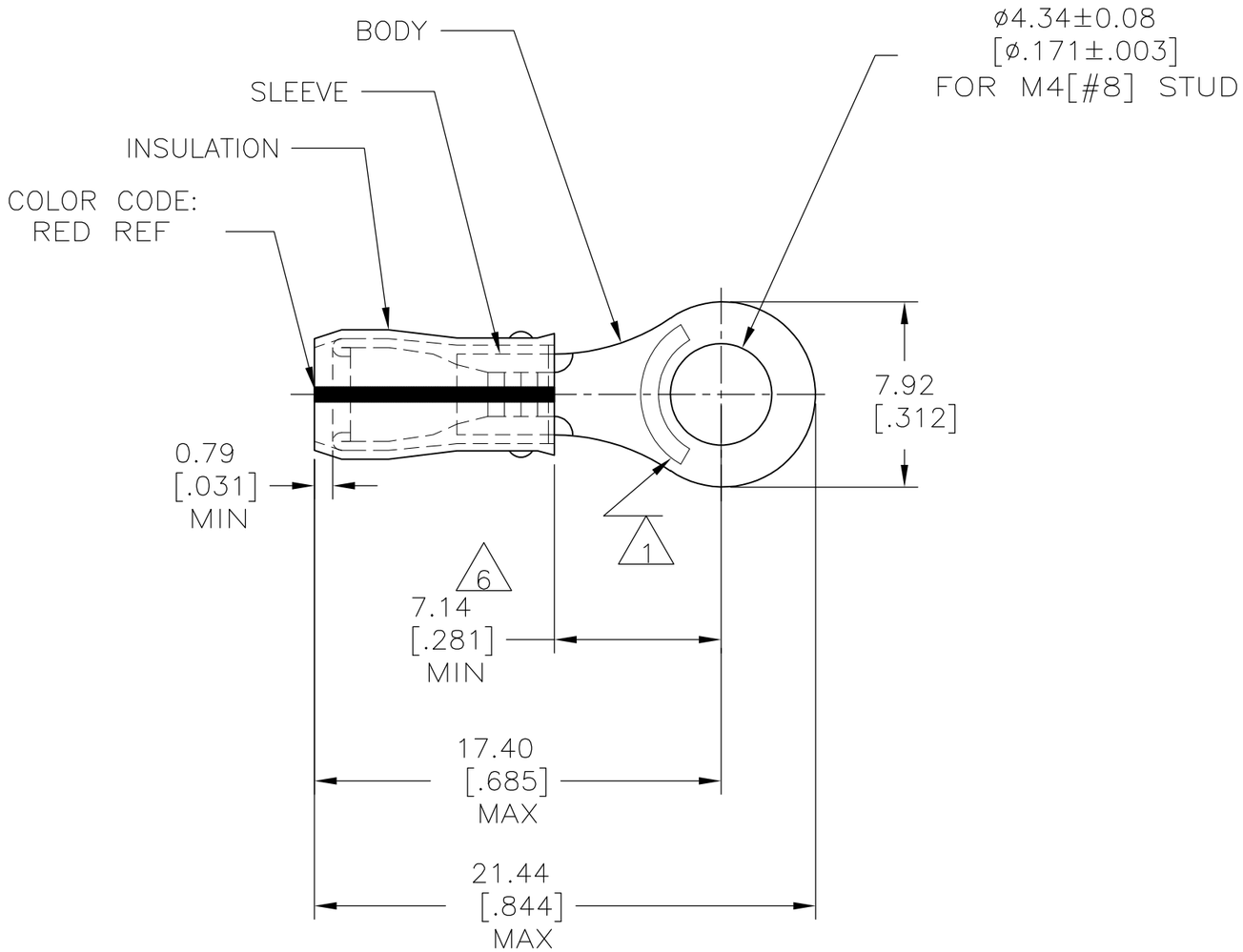

1. STAMP AMP 22-18* APPROX AS SHOWN 22-16 TERMINALS ARE STAMPED 22-18 IN ACCORDANCE WITH MILITARY SPEC SAE AS7928 COMMERCIAL WIRE RANGE IS 22-16.
2. WIRE INSULATION DIA: 2.03-3.18 [.080-.125]
3. TONGUE MATERIAL THK: 0.79±0.05 [.031±.002]
4. BODY & SLEEVE: TIN/LEAD (93-7) PLATE PER ASTM B545, (3% MIN LEAD CONTENT)
5. BODY & SLEEVE- CU PER ASTM B152 INSULATION - PVF2, COLOR - NATURAL
6. DIMENSION APPLIES FROM EDGE OF METAL WIRE BARREL TO CENTER OF STUD HOLE.

MILITARY P/N & CLASS	QTY	PACKAGE TYPE	PART NO.
-	100	LOOSE PIECE, BOX	8-53408-1
M7928/4-149, CLASS 2	5000	ON TAPE, REEL	53408-2
M7928/4-149, CLASS 1 & 2 M7928/13-149, CLASS 1 & 2	1000	LOOSE PIECE	53408-1

AMP INCORPORATED
CUSTOMER SERVICE SYSTEMS

FOR ADDITIONAL PRODUCT INFORMATION OR COPIES OF DRAWINGS AND TECHNICAL DOCUMENTS	PRODUCT INFORMATION CENTER 1-800-522-6752
FOR APPLICATION TOOLING INFORMATION	TOOLING ASSISTANCE CENTER 1-800-722-1111
FOR ORDER ENTRY	1-800-526-5142

THIS DRAWING IS A CONTROLLED DOCUMENT FOR AMP INCORPORATED. IT IS SUBJECT TO CHANGE AND THE CONTROLLING ENGINEERING ORGANIZATION SHOULD BE CONTACTED FOR THE LATEST REVISION.

MAX RECOMMENDED OPERATING TEMPERATURE: 150°C[302°F] MAX

VOLTAGE RATING: N/A

CIRCULAR MIL AREA: 0.26-1.65mm² [509-3260] STRANDED

THIS DRAWING IS A CONTROLLED DOCUMENT.

DIMENSIONS: mm [INCHES]

TOLERANCES UNLESS OTHERWISE SPECIFIED:

0 PLC	± -
1 PLC	± -
2 PLC	± 0.20[.008]
3 PLC	± -
4 PLC	± -
ANGLES	± -

MATERIAL - 5

FINISH - 4

DWN	DK SCHRUM	06/16/93
CHK	RE HERSEY	7/6/93
APVD	M ELLIS	7/6/93
PRODUCT SPEC	—	
APPLICATION SPEC	NOT AVAILABLE	
WEIGHT	—	

TE Connectivity

NAME: TERMINAL, RING TONGUE, PVF2 , P.I.D.G. WIRE SIZE: 22-16 AWG

SIZE	CAGE CODE	DRAWING NO	RESTRICTED TO
A3	00779	C-53408	—

CUSTOMER DRAWING | SCALE 4:1 | SHEET 1 OF 1 | REV L2

1470-19 (3/11)

Mouser Electronics

Authorized Distributor

Click to View Pricing, Inventory, Delivery & Lifecycle Information:

TE Connectivity:

53408-2