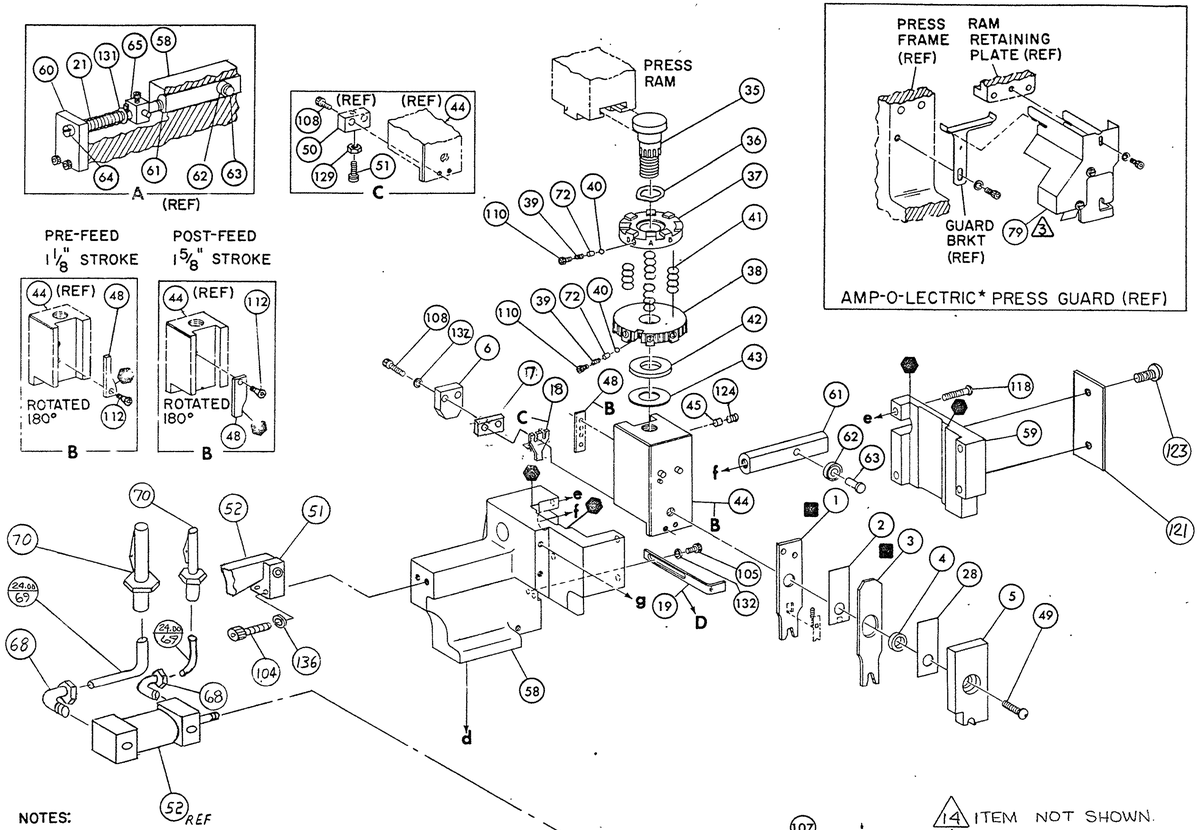

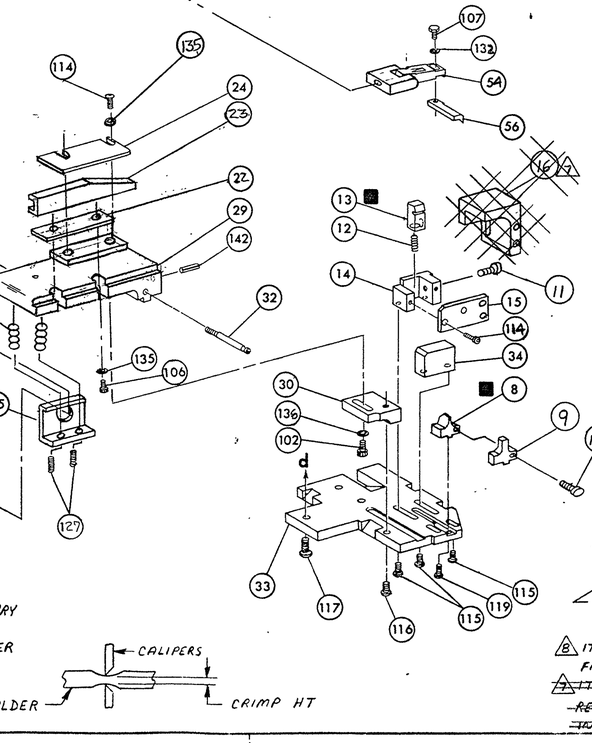

NOTES:

1.- ONLY THE ITEMS WITH QUANTITIES SPECIFIED ON PARTS LIST ARE USED ON THIS APPLICATOR.

2.-USED IN PLACE OF ITEM 38 WHEN INSULATION CRIMP IS NOT USED.

3.-GUARD MUST MUST BE IN PLACE WHEN OPERATING APPLICATOR IN AMP-O-LECTRIC PRESS.

4. SEE DRWG FOR COMPONENTS

KEY:

-RECOMMENDED SPARE PARTS

-LUBRICATE DAILY USING NO. 20 MACHINE OIL.

GREASE LIGHTLY

5. FEED ASS'Y ADJ. MAY BE NECESSARY WHEN SWITCHING TERMINALS.

6. TO CHECK CRIMP HT. CRIMP SOLDER (1/8 DIA 60/40 SOLID CORE) AND MEASURE AT CENTER OF SLUG

14. ITEM NOT SHOWN.

13. ITEMS 75 & 144 MUST BE INSTALLED IN THE G.T.U CHIP RELIEF HOLE BEFORE INSTALLING APPLICATOR.

12. QTY IN INCHES TOLERANCE ±.25

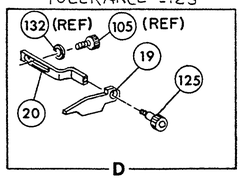

11. INSTALL ITEM 75 IN CHIP RELIEF HOLE OF T-PRESS BEFORE INSTALLING APPL.

10. IT MAY BE NECESSARY TO MODIFY THE T-PRESS BASE PLATE BEFORE INSTALLING THIS APPL. BY ADDING A 10-32 HOLE TO RELOCATE THE FORWARD STOP AS SHOWN.

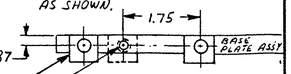

10-32 UNF-2B x .50 DP

RELOCATE THIS STOP TO NEXT OR ADDED HOLE

8. ITEM 76 REQ'D WHEN APPL. IS REMOVED FROM AMPOMATOR & PLACED IN A-O-L PRESS.

~~7. ITEM 16 MUST BE REMOVED IF APPL. IS REMOVED FROM AMP-O-MATOR & PLACED IN A-O-L PRESS~~

QTY	PART NO	DESCRIPTION	ITEM NO
—	21045-3	RING, RETAINING 'C' (.187 DIA) FEED FINGER PIN	145
1	189728-1	BRACKET, SPACER 8 13	144
—	5-21028-1	PIN, SLOT SPR (.125 DIA X .50) ADJ ROD	143
1	4-21028-0	PIN, SLOT SPR (.093 DIA X .75) STR G PLATE	142
—	1-21030-1	PIN, DOWEL (.187 DIA X .50) LEVER	141
—	1-21030-6	PIN, DOWEL (.187 DIA X 1.25) HOUSING	140
—	21024-5	WASHER, LOCK (NO 10) LUB ASSY	139
~~1~~	~~21024-5~~	~~WASHER, LOCK (NO 10) STRIP GUIDE ADJ BLOCK~~	138
—	21024-5	WASHER, LOCK (NO 10) ADJ PLATE	137
3	21024-5	WASHER, LOCK (NO 10) FEED GUIDE ROD	136
3	21024-2	WASHER, LOCK (NO 4) FRONT STRIP GUIDE	135
~~1~~	~~21024-4~~	~~WASHER, LOCK (NO 8) FEED FINGER~~	134
~~1~~	~~21024-4~~	~~WASHER, LOCK (NO 8) DEPRESSOR~~	133
4	21024-4	WASHER, LOCK (NO 8) STRIPPER, DEP & FINGER	132
—	21899-4	WASHER, FLAT (5/16 DIA) SCREW ADJ	131
—	21899-2	WASHER, FLAT (NO 10) LUB ASSY	130
—	21018-5	NUT, HEX MACH (6-32) HOLDDOWN	129
—	21018-5	NUT, HEX MACH (6-32) FEED ADJ	128
2	5-21006-6	SCR, SET (10-32 X .75) DRAG	127
1	22353-8	SCR, SHLD. (.187 DIA X .250 LG) DRAG LEVER	126
~~1~~	~~456567-1~~	~~SCR, SHLD (.188 DIA X .125 LG) STRIPPER~~	125
1	21007-2	SCR, SKT SET (1/4-20 X .25) (LOC-WEL) RAM	124
2	21017-2	SCR, DRIVE #2 X .19	123
—	6-23715-5	SCR, PAN HD MACH (6-32 X 1.50) FEED ADJ	122
1	461264-1	PLATE, IDENTIFICATION	121
~~1~~	~~21002-9~~	~~SCR, BUT HD SKT CAP (10-32 X .75) DRAG~~	120
1	22733-8	SCR, BUT HD SKT CAP (8-32 X .38) (LOC-WEL) ANVIL	119
4	2-21002-9	SCR, BUT HD SKT CAP (10-32 X .75) CAP	118
3	17177-1	SCR, BUT HD SKT CAP (1/4-20 X .62) HOUSING	117
1	2-21002-7	SCR, BUT HD SKT CAP (10-32 X .50) SG ADJ BLOCK	116
4	2-21002-2	SCR, BUT HD SKT CAP (8-32 X .50) SHEAR	115
4	1-21000-3	SCR, SKT HD SKT CAP (4-40 X .25) R STRIP GUIDE	114
~~1~~	~~2-21000-7~~	~~SCR, SKT HD CAP (8-32 X .50) ANVIL, INS.~~	113
1	2-21003-0	SCR, FLAT HD SKT CAP (6-32 X .50) CAM	112
—	3-21000-4	SCR, SKT HD CAP (10-32 X .38) LUBRICATOR ASSY	111
2	23030-1	SCR, SKT HD CAP (6-32 X .25) (LOC-WEL) CP DISC	110
~~4~~	~~1-21000-3~~	~~SCR, SKT HD CAP (4-40 X .25) REAR SHEAR PLATE~~	109
2	2-21000-9	SCR, SKT HD CAP (8-32 X .75) DEPRESSOR	108
1	2-22603-0	SCR, HEX HD MACH (8-32 X .31) FEED FINGER	107
3	1-21000-4	SCR, SKT HD CAP (4-40 X .38) F STRIP GUIDE	106
2	2-21000-7	SCR, SKT HD CAP (8-32 X .50) STRIPPER & ANVIL	105
2	3-21000-9	SCR, SKT HD CAP (10-32 X 1.00) AIR FEED ASS'Y	104
—	3-21000-6	SCR, SKT HD CAP (10-32 X .62) FEED ADJ BLOCK	103
1	3-21000-4	SCR, SKT HD CAP (10-32 X .38) SG ADJ BLOCK	102
—	3-21000-4	SCR, SKT HD CAP (10-32 X .38) PIVOT BLOCK	101
REF	462992-7	GUARD 3	79
—	1-465184-0	LUBRICATOR ASSY	78
—	692655-1	VALVE ASS'Y 4	77
REF	803931-1	BRACKET, HOLD DOWN 8	76
1	568681-1	SPACER, BASE PLATE 13 11	75
—	458109-1	WASHER, SPECIAL	74
1	1-18023-1	SCR, SHC, METRIC, M4 x 10 LG 14 13	73
2	690603-1	SPRING, ASSIST	72
—	690517-1	SPACER	71
2	23238-1	QUICK DISCONNECT	70
12 48"	27319-4	TUBING 1/4 O.D.	69
2	22294-6	ELBOW, MALE 1/8 NPT - 1/4 T	68
—	240633-1	BUSHING	67
—	455680-1	LEVER, INTERMEDIATE	66
—	240629-1	BLOCK, PIVOT	65
—	240632-2	SCREW, ADJUSTMENT FEED ROD	64
—	240659-3	PIN, CAM ROLLER	63
—	240658-1	ROLLER, CAM	62
—	454398-2	ROD, FEED	61
—	454178-1	GUIDE, FEED ROD	60

QTY	PART NO	DESCRIPTION	ITEM NO
1	454220-1	CAP, HOUSING	59
1	454485-1	HOUSING	58
			57
1	462427-1	PAWL, FEED	56
—	240624-1	PIN, FEED FINGER	55
1	461062-2	ASS'Y, FEED FINGER	54
		FINGER, FEED	53
1	461065-4	ASS'Y, AIR FEED 5	52
1	459610-3	MOUNT, FEED BRACKET	51
		SPACER, TONKER	50
1	7-21002-9	BOLT, CRIMPER	49
		CAM FEED STROKE	48
			47
	459456-1	APPLICATOR, BASIC (SUB ASSY)	46
1	690191-1	PLUG, NYLON	45
1	455673-1	RAM	44
1	690125-1	WASHER, LAMINATED	43
1	690124-1	WASHER, RAM	42
8	1-22280-2	SPRING, INS. DISC	41
2	23241-6	BALL, STEEL	40
2	690170-1	SPRING, COMPRESSION	39
1	690142-5	DISC, INSULATION	38
1	808834-1	DISC, WIRE	37
1	22480-5	WASHER, SPRING	36
1	690212-1	POST, RAM	35
		SUPPORT, TERMINAL	34
1	808835-1	PLATE, BASE	33
1	690432-3	SCREW, ADJUSTMENT	32
			3
1	455689-1	BLOCK, STRIP GUIDE ADJ	30
1	684045-2	PLATE, STRIP GUIDE	29
		SPACER, FRONT SHEAR DEPRESSOR	28
2	22281-9	SPRING, DRAG	27
1	240793-4	LEVER, DRAG RELEASE	26
1	240792-6	DRAG, STOCK	25
1	690438-1	GUIDE STRIP (REAR)	24
1	684042-2	GUIDE, STRIP (FRONT)	23
1	817682-1	SPACER, FRONT STRIP GUIDE	22
—	4-22284-9	SPRING, FEED RETURN	21
		ARM, STRIPPER	20
1	690472-2	STRIPPER	19
1	463460-3	HOLDER, TERMINAL	18
			17
~~1~~	~~803925-1~~	~~GUIDE, CARRIER STRIP~~	16
1	803926-1	PLATE, SHEAR (REAR) ■	15
1	467590-1	HOLDER, SHEAR (REAR)	14
1	469542-3	SHEAR, FLOAT (REAR) ■	13
1	5-22280-0	SPRING, SHEAR	12
1	1-690461-1	STOP, SHEAR	11
		HOLDER, SHEAR (FRONT)	10
1	1-454766-4	ANVIL, INSULATION ■	9
1	808025-2	ANVIL, WIRE ■	8
1	240641-9	SPACER, DEPRESSOR (REAR)	7
1	690468-6	DEPRESSOR, SHEAR (REAR)	6
		DEPRESSOR, SHEAR (FRONT)	5
1	238009-1	SPACER, TUBULAR, INS CRIMPER	4
1	2-454765-2	CRIMPER, INSULATION ■	3
		SPACER, CRIMPER	2
1	808830-2	CRIMPER, WIRE ■	1

CRIMPING DATA					APPLICATOR WILL APPLY
PAD LTR	CRIMP HEIGHT		WIRE SIZE	SOLDER DIA. 6	520401
A	.070 6		18	.12 DIA	520403
B	.065 6		20 OR 22	.12 DIA	520405
C	NOT		USED		
D	NOT		USED		
CRIMP	SIZE	TYPE	FEED	APPL INST	
WIRE	.176	D	.785	A1 8079	
INSUL	—	—			
WIRE RANGE 22-18		INSULATION RANGE .135 MAX		PRESS NO —	

REMARKS

KOMAX MODEL 40

AIR FEED DOUBLE ACTING

TERM APPL SPEC 114-2123

REMARKS		NO	REV
		TO APPLY TERMINAL	
APPL USED ON MACHINE PART NO	MACH SERIAL NO	DISTRIBUTION	
CUSTOMER NAME	APPL SERIAL NO	ORIGINAL	
ADDRESS	PURCHASE ORDER	CUSTOMER COPY	
CITY	ENG APP	FIELD ENG COPY	

P F	LTR	REVISION RECORD	APP	DATE
B		ECN 0150-1011-01		10-01
A		DISO 5553 94		7-94

SET UP GAGE 4586637-1 10-1 1213
DR 8-26-93 P. Mathias
APP
CHK 8-26-93 C. Cusson
REL

AMP INCORPORATED Harrisburg, Pa.

LOC A D NO 680040-1 REV B

NAME MINIATURE QUICK CHANGE APPLICATOR

SIDE FEED (FULLY INSULATED FASTON)

CUSTOMER AND ASSEMBLY DRAWING

DIST 66

* Trademark of AMP Incorporated

AMP 2983-3 (4-76)

THIS DRAWING IS A CONTROLLED DOCUMENT FOR INTERNAL USE ONLY AND IS THE PROPERTY OF AMP INCORPORATED AND THE CONTROLLING ENGINEERING ORGANIZATION. SHOULD BE CONTACTED FOR THE LATEST REVISION.

THIS IS A CONTROLLED DOCUMENT.

THIS DOCUMENT IS COPYRIGHTED BY AMP INCORPORATED. ALL RIGHTS RESERVED. COPYRIGHT 1993

Mouser Electronics

Authorized Distributor

Click to View Pricing, Inventory, Delivery & Lifecycle Information:

TE Connectivity:
680040-1