DRAWING MADE IN THIRD ANGLE PROJECTION

1385196 ⇔ 1385196

/home/ampt5242/alsdwgs

PART NUMBER	REV	FIRST USED
1385196-1	A	122500-1
1385196-2	A	565435-5

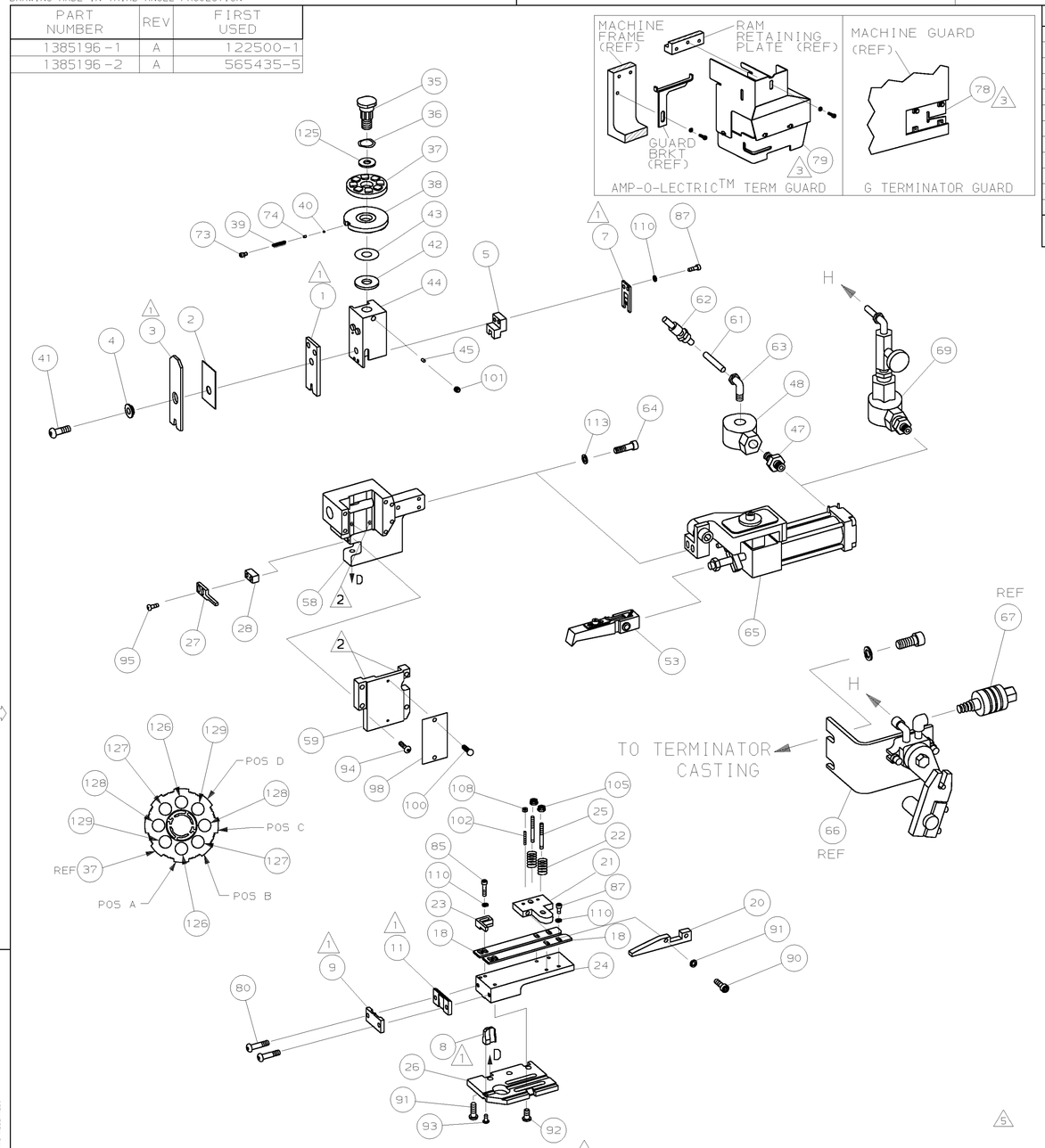

1 RECOMMENDED SPARE PARTS.

2 GREASE LIGHTLY.

3 GUARD MUST BE IN PLACE WHEN OPERATING APPLICATOR IN A BENCH MACHINE.

4 SEE DRAWING FOR COMPONENTS

5 ITEM 78 USED WITH G TERMINATOR ONLY.

TERMINAL NAME: RECEPT, CLUSTER PIN, .090 DIA

1217264-1

AMP TERMINAL AMP CRIMP SPECS

PAD LTR	CRIMP HEIGHT	WIRE SIZE
A	.077 ±.002 [1.96 ±0.05mm]	14
B	.067 ±.002 [1.70 ±0.05mm]	16
C	.061 ±.002 [1.55 ±0.05mm]	18
D	.055 ±.002 [1.40 ±0.05mm]	20 & 22

CRIMP	SIZE	TYPE	RANGE
WIRE	.100 [2.54mm]	F	22-14
INSUL	.140 [3.56mm]	F	.080-.150

WIRE STRIP LENGTH	TERM APPL SPEC	FEED	APPL INSTRUCTION	SET UP GAGE	LAYOUT
.200-.216	114-2019	.735	408-8039	458638-1	L2454

-2	-1	U/M	DWG SIZE	PART NO	DESCRIPTION	ITEM NO
2	2	-	C	2-354779-4	PIN, WIRE DISC (.3110)D	129
2	2	-	C	1-354779-2	PIN, WIRE DISC (.3050)C	128
2	2	-	C	9-354778-7	PIN, WIRE DISC (.2980)B	127
2	2	-	C	7-354778-7	PIN, WIRE DISC (.2880)A	126
1	1	-	A	986950-1	WASHER, FLAT PRECISION	125
1	1	-	A	217238-1	GENERAL INSTRUCTION PACKAGE	124
1	1	-	-	4088039	EF APPL INST 408-8039	123
						122
						121
						120
						119
						118
						117
						116
						115
						114
2	2	-	A	21024-5	WASHER,LOCK(#10)AIR ASSY	113
						112
						111
7	7	-	A	21024-4	WASHER,LOCK(NO.8)SHEAR BL	110
						109
2	2	-	A	21018-4	NUT,HEX(4-40)DRAG	108
						107
						106
2	2	-	A	21022-2	NUT,HEX SL(8-32)DRAG STUD	105
						104
						103
2	2	-	A	2-21006-6	SCR,SKT SET(4-40x.62)DRAG	102
1	1	-	A	21009-2	SCR,SKT SET(1/4-20x.25)RAM	101
2	2	-	A	21017-2	SCR,DRIVE(#2x.19)ID PLATE	100
						99
1	1	-	B	461264-1	PLATE, IDENTIFICATION	98
						97
						96
2	2	-	A	2-21002-2	SCR,BHC(8-32x.50)STRIPPER	95
						94
1	1	-	A	22733-8	SCR,BHC(8-32x.38 LW)ANVIL	93
4	4	-	A	3-21002-3	SCR,BHC(1/4-20x.50)ST GD PL	92
2	2	-	A	21024-2	WASHER, LOCK #4	91
2	2	-	A	1-21000-3	SCR,SHC(4-40x.25)	90
						89
						88
5	5	-	A	2-21000-6	SCR,SHC(8-32x.38)SLUG BLADE	87
						86
2	2	-	A	2-21000-9	SCR,SHC(8-32x.75)R STP GUIDE	85
						84
						83
						82
						81
2	2	-	A	3-21002-0	SCR,BHC(10-32x.88)SHEAR PL	80
REF	-	-	A	455745-1	GUARD, WINDOW	79
-	REF	-	A	679532-1	INSERT, GUARD	78
						77
						76
						75
1	1	-	A	690603-1	SPRING, ASSIST	74
1	1	-	A	23030-1	SCR,SKT CAP(6-32x.25)CP DSC	73
						72
						71

QTY REQD PER ASSY — PARTS LIST

-1	LEADMAKER & BENCH MODEL G	AIR FEED
-2	BENCH MODEL K	AIR FEED

-2	-1	U/M	DWG SIZE	PART NO	DESCRIPTION	ITEM NO
						70
1	-	-	C	692655-5	AIR FEED VALVE ASSY	69
						68
REF	-	-	A	24042-2	VALVE, SHUT OFF	67
REF	-	-	C	692655-6	AIR FEED VALVE ASSY	66
1	1	-	B	460277-1	AIR FEED ASSY (1 INCH)	65
2	2	-	A	3-21000-9	SCR,SHC(10-32x1.00)AIR ASSY	64
-	1	-	A	980285-2	ELBOW, SWIVEL 1/8 NPT - 1/4 T	63
-	1	-	A	23238-1	QUICK DISCONNECT	62
-	12.00	IN	A	27319-4	TUBING, POLY-FLO ø.25	61
						60
1	1	-	C	454220-1	CAP, RAM	59
1	1	-	C	453736-1	HOUSING	58
						57
						56
						55
						54
1	1	-	B	460680-2	FEED FINGER ASSY	53
						52
						51
						50
						49
-	1	-	A	22374-7	VALVE, QUICK EXHAUST	48
-	1	-	A	22304-1	NIPPLE,HEX 1/8 NPT	47
						46
1	1	-	A	690191-1	PLUG, NYLON	45
1	1	-	C	455674-1	RAM	44
1	1	-	A	690125-1	WASHER, LAMINATED	43
1	1	-	A	690124-1	WASHER, RAM	42
1	1	-	A	7-21002-9	BOLT, CRIMPER(5/16-24x1.00)	41
1	1	-	A	23241-6	BALL, STEEL	40
1	1	-	A	690170-1	SPRING, COMPRESSION	39
1	1	-	C	690142-1	DISC, INSULATION	38
1	1	-	D	354777-1	WIRE DISC, PLASTIC	37
1	1	-	A	22480-5	WASHER, SPRING	36
1	1	-	B	690212-1	POST, RAM	35
						34
						33
						32
						31
						30
						29
1	1	-	B	4-690451-7	SPACER, STRIPPER	28
1	1	-	A	240639-2	STRIPPER	27
1	1	-	A	455676-1	PLATE, BASE	26
2	2	-	A	22354-8	DRAG, STUD	25
1	1	-	B	455678-1	PLATE, STRIP GUIDE	24
1	1	-	C	240825-1	PLATE, STRIP HOLD DOWN	23
2	2	-	A	4-22281-1	SPRING, DRAG	22
1	1	-	A	464451-1	ARM, STOCK DRAG	21
1	1	-	A	464452-4	DRAG, STOCK	20
						19
2	2	-	C	454204-3	GUIDE, STRIP (FRONT)	18
						17
						16
						15
						14
						13
						12
1	1	-	B	240644-1	PLATE, REAR SHEAR	11
						10
1	1	-	B	690482-5	PLATE, FRONT SHEAR	9
1	1	-	D	8-461295-2	ANVIL	8
1	1	-	B	690474-5	BLADE, SLUG	7
						6
1	1	-	C	804939-4	SIZING TOOL	5
1	1	-	B	238009-1	SPACER, BLOCK CRIMPER	4
1	1	-	C	8-456134-0	CRIMPER, INSULATION	3
1	1	-	B	1-455888-6	SPACER, CRIMPER	2
1	1	-	C	456407-5	CRIMPER, WIRE	1

REVISION OF EACH ASSY NO (WHEN BLANK, USE DWG REVISION)

QTY REQD PER ASSY — PARTS LIST

P	F	LTR	REVISION RECORD	APP	DATE
		A	REVISED	AA	12/00

DIMENSIONS IN INCHES. DO NOT SCALE PRINT.
TOLERANCES UNLESS OTHERWISE SPECIFIED:
2 PLC DEC ±-
3 PLC DEC ±-
4 PLC DEC ±-
ANGLES ±-
SURF TEXTURE: √
REMOVE BURRS, BREAK SHARP EDGES R.015 MAX

MATL	- -	HT TR	- -
FIN	- -		
DR B.HIGMAN	08NOV00	APP T.ELBIN	08NOV00
CHK - -		REL - -	

AMP Incorporated, Harrisburg, PA 17105-3608

NAME END FEED HDM APPLICATOR — MACHINE REF MINI APPL

SCALE - — D — DWG NO 1385196 — SHEET 1 OF 1 — REV A

CAGE CODE 00779 — CUSTOMER AND ASSEMBLY DRAWING — RESTRICTED TO -

THIS DRAWING IS A CONTROLLED DOCUMENT.

THIS DRAWING IS UNPUBLISHED. © COPYRIGHT 2000 BY AMP INCORPORATED. ALL RIGHTS RESERVED. RELEASED FOR PUBLICATION .2000

LOC A — DIST 66

AMP 1756 REV 3-92 — 04-DEC-00 — 14:24:21 ampt5242

Mouser Electronics

Authorized Distributor

Click to View Pricing, Inventory, Delivery & Lifecycle Information:

TE Connectivity:

1385196-2