THIS DRAWING IS UNPUBLISHED. RELEASED FOR PUBLICATION -,- .
© COPYRIGHT - By - ALL RIGHTS RESERVED.

LOC	DIST
AD	00

REVISIONS

P	LTR	DESCRIPTION	DATE	DWN	APVD
	F7	REVISED PER ECO-13-005565	01APR13	KH	JO

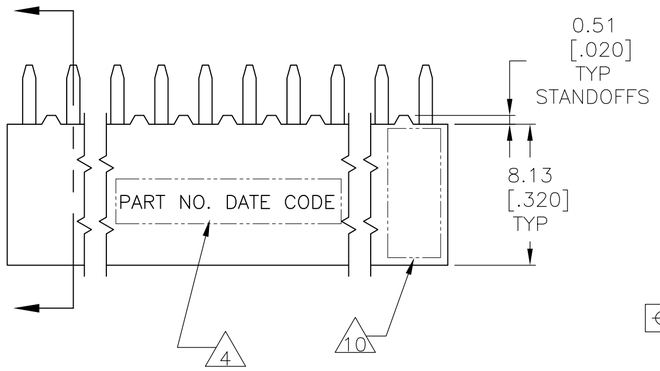

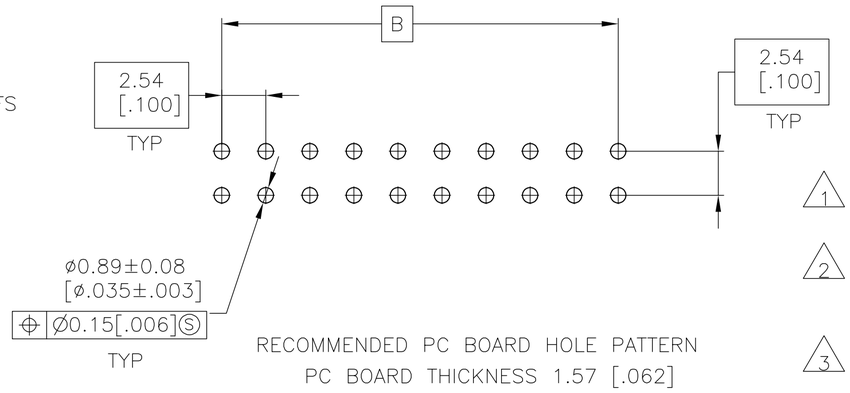

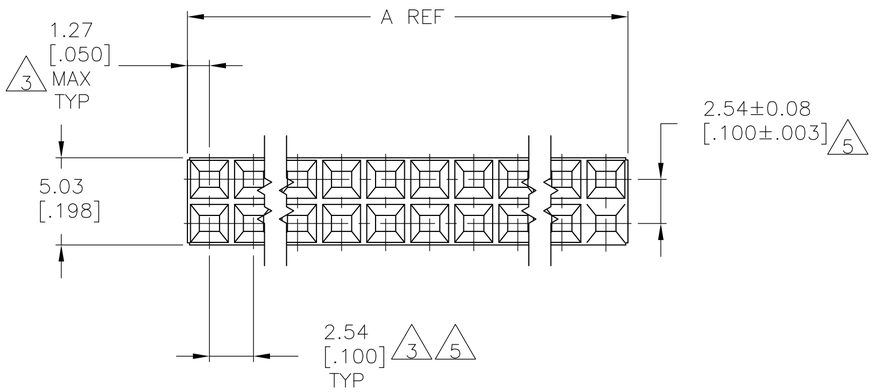

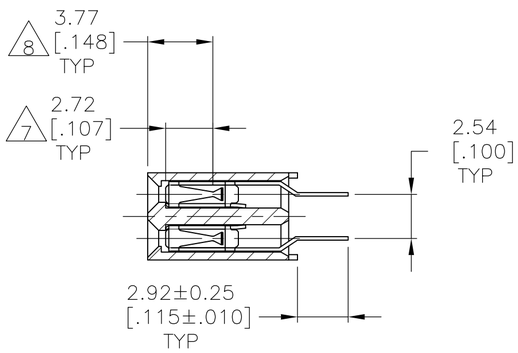

1. HOUSING: FLAME RETARDANT, GLASS FILLED, POLYESTER, COLOR: BLACK. CONTACT: PHOSPHOR BRONZE
2. CONTACT: DUPLEX PLATED 0.25µm[.000010] MIN GOLD IN CONTACT AREA, 3.81–7.62µm[.000150–.000300] BRIGHT TIN–LEAD ON LEADS ALL OVER 1.27µm[.000050] MINIMUM NICKEL.
3. THESE DIMENSIONS PERTAIN TO CAVITIY CENTERLINES ONLY – NOT TO CONTACT LOACATIONS
4. MARK PART NUMBER AND DATE CODE IN APPROXIMATE LOCATION SHOWN, EITHER SIDE.
5. TOLERANCE IS NON–CUMULATIVE.
6. 2 POSITION DATE CODE IS MARKED OPPOSITE SIDE OF TE LOGO.
7. POINT–OF–MEASUREMENT DIMENSION FOR PLATING THICKNESS (INSIDE CONTACT BEAM).
8. POINT–OF–CONTACT DIMENSION.
9. NO PART NUMBER MARKING REQUIRED FOR THIS PART.
10. TE LOGO AND CSA LOGO ARE MOLDED INTO HOUSING.
11. CONTACT: DUPLEX PLATED 0.25µm[.000010] MIN GOLD IN CONTACT AREA, 3.81–7.62µm[.000150–.000300] MATTE TIN ON LEADS ALL OVER 1.27µm[.000050] MINIMUM NICKEL
12. ROHS 2002/95/EC COMPLIANT

147424

THIS DRAWING IS A CONTROLLED DOCUMENT.

DIMENSIONS: mm [INCHES]

TOLERANCES UNLESS OTHERWISE SPECIFIED:

0 PLC	±	–
1 PLC	±	–
2 PLC	±	0.13[.005]
3 PLC	±	–
4 PLC	±	–
ANGLES	±	–

MATERIAL 1

FINISH 2 11

DWN	M.BINNER	06NOV2002
CHK	J.OLSON	06NOV02
APVD	J.OLSON	06NOV02
PRODUCT SPEC	108–25022	
APPLICATION SPEC	114–25018	
WEIGHT	–	

TE Connectivity

NAME: RECEPTACLE ASSEMBLY, MOD IV, DOUBLE ROW, TOP ENTRY, .100X.100CL, VERTICAL MOUNT, AMPMODU

SIZE	CAGE CODE	DRAWING NO	RESTRICTED TO
A2	00779	C-147424	–

CUSTOMER DRAWING | SCALE 4:1 | SHEET 1 OF 2 | REV F7

THIS DRAWING IS UNPUBLISHED. RELEASED FOR PUBLICATION -,- .
© COPYRIGHT - By - ALL RIGHTS RESERVED.

LOC	DIST
AD	00

REVISIONS

P	LTR	DESCRIPTION	DATE	DWN	APVD
	-	SEE SHEET 1	-	-	-

	FINISH	B	A	NO OF POSN	PART NUMBER
	2	99.06[3.900]	101.60[4.000]	80	4-147424-0
	2	96.52[3.800]	99.06[3.900]	78	3-147424-9
	2	93.98[3.700]	96.52[3.800]	76	3-147424-8
	2	91.44[3.600]	93.98[3.700]	74	3-147424-7
	2	88.90[3.500]	91.44[3.600]	72	3-147424-6
	2	86.36[3.400]	88.90[3.500]	70	3-147424-5
	2	83.82[3.300]	86.36[3.400]	68	3-147424-4
	2	81.28[3.200]	83.82[3.300]	66	3-147424-3
	2	78.74[3.100]	81.28[3.200]	64	3-147424-2
	2	76.20[3.000]	78.74[3.100]	62	3-147424-1
	2	73.66[2.900]	76.20[3.000]	60	3-147424-0
	2	71.12[2.800]	73.66[2.900]	58	2-147424-9
	2	68.58[2.700]	71.12[2.800]	56	2-147424-8
	2	66.04[2.600]	68.58[2.700]	54	2-147424-7
	2	63.50[2.500]	66.04[2.600]	52	2-147424-6
	2	60.96[2.400]	63.50[2.500]	50	2-147424-5
SUPERSEDED BY 7-147424-4	2	~~58.42[2.300]~~	~~60.96[2.400]~~	~~48~~	~~2-147424-4~~
	2	55.88[2.200]	58.42[2.300]	46	2-147424-3
	2	53.34[2.100]	55.88[2.200]	44	2-147424-2
	2	50.80[2.000]	53.34[2.100]	42	2-147424-1
SUPERSEDED BY 7-147424-0	2	~~48.26[1.900]~~	~~50.80[2.000]~~	~~40~~	~~2-147424-0~~
	2	45.72[1.800]	48.26[1.900]	38	1-147424-9
	2	43.18[1.700]	45.72[1.800]	36	1-147424-8
	2	40.64[1.600]	43.18[1.700]	34	1-147424-7
SUPERSEDED BY 6-147424-6	2	~~38.10[1.500]~~	~~40.64[1.600]~~	~~32~~	~~1-147424-6~~
SUPERSEDED BY 6-147424-5	2	~~35.56[1.400]~~	~~38.10[1.500]~~	~~30~~	~~1-147424-5~~
	2	33.02[1.300]	35.56[1.400]	28	1-147424-4
	2	30.48[1.200]	33.02[1.300]	26	1-147424-3
	2	27.94[1.100]	30.48[1.200]	24	1-147424-2
	2	25.40[1.000]	27.94[1.100]	22	1-147424-1
SUPERSEDED BY 6-147424-0	2	~~22.86[.900]~~	~~25.40[1.000]~~	~~20~~	~~1-147424-0~~
	2	20.32[.800]	22.86[.900]	18	147424-9
	2	17.78[.700]	20.32[.800]	16	147424-8
	2	15.24[.600]	17.78[.700]	14	147424-7
	2	12.70[.500]	15.24[.600]	12	147424-6
9	2	10.16[.400]	12.70[.500]	10	147424-5
9	2	7.62[.300]	10.16[.400]	8	147424-4
9	2	5.08[.200]	7.62[.300]	6	147424-3
9	2	2.54[.100]	5.08[.200]	4	147424-2
9 OBSOLETE	2	-	2.54[.100]	2	6 ~~147424-1~~

	FINISH	B	A	NO OF POSN	PART NUMBER
	11	99.06[3.900]	101.60[4.000]	80	12 9-147424-0
	11	96.52[3.800]	99.06[3.900]	78	12 8-147424-9
	11	93.98[3.700]	96.52[3.800]	76	12 8-147424-8
	11	91.44[3.600]	93.98[3.700]	74	12 8-147424-7
	11	88.90[3.500]	91.44[3.600]	72	12 8-147424-6
	11	86.36[3.400]	88.90[3.500]	70	12 8-147424-5
	11	83.82[3.300]	86.36[3.400]	68	12 8-147424-4
	11	81.28[3.200]	83.82[3.300]	66	12 8-147424-3
	11	78.74[3.100]	81.28[3.200]	64	12 8-147424-2
	11	76.20[3.000]	78.74[3.100]	62	12 8-147424-1
	11	73.66[2.900]	76.20[3.000]	60	12 8-147424-0
	11	71.12[2.800]	73.66[2.900]	58	12 7-147424-9
	11	68.58[2.700]	71.12[2.800]	56	12 7-147424-8
	11	66.04[2.600]	68.58[2.700]	54	12 7-147424-7
	11	63.50[2.500]	66.04[2.600]	52	12 7-147424-6
	11	60.96[2.400]	63.50[2.500]	50	12 7-147424-5
	11	58.42[2.300]	60.96[2.400]	48	12 7-147424-4
	11	55.88[2.200]	58.42[2.300]	46	12 7-147424-3
	11	53.34[2.100]	55.88[2.200]	44	12 7-147424-2
	11	50.80[2.000]	53.34[2.100]	42	12 7-147424-1
	11	48.26[1.900]	50.80[2.000]	40	12 7-147424-0
	11	45.72[1.800]	48.26[1.900]	38	12 6-147424-9
	11	43.18[1.700]	45.72[1.800]	36	12 6-147424-8
	11	40.64[1.600]	43.18[1.700]	34	12 6-147424-7
	11	38.10[1.500]	40.64[1.600]	32	12 6-147424-6
	11	35.56[1.400]	38.10[1.500]	30	12 6-147424-5
	11	33.02[1.300]	35.56[1.400]	28	12 6-147424-4
	11	30.48[1.200]	33.02[1.300]	26	12 6-147424-3
	11	27.94[1.100]	30.48[1.200]	24	12 6-147424-2
	11	25.40[1.000]	27.94[1.100]	22	12 6-147424-1
	11	22.86[.900]	25.40[1.000]	20	12 6-147424-0
	11	20.32[.800]	22.86[.900]	18	12 5-147424-9
	11	17.78[.700]	20.32[.800]	16	12 5-147424-8
	11	15.24[.600]	17.78[.700]	14	12 5-147424-7
	11	12.70[.500]	15.24[.600]	12	12 5-147424-6
9	11	10.16[.400]	12.70[.500]	10	12 5-147424-5
9	11	7.62[.300]	10.16[.400]	8	12 5-147424-4
9	11	5.08[.200]	7.62[.300]	6	12 5-147424-3
9	11	2.54[.100]	5.08[.200]	4	12 5-147424-2
9 OBSOLETE	11	-	2.54[.100]	2	6 12 ~~5-147424-1~~

147424

THIS DRAWING IS A CONTROLLED DOCUMENT.

DIMENSIONS: mm [INCHES]

TOLERANCES UNLESS OTHERWISE SPECIFIED:
0 PLC ± -
1 PLC ± -
2 PLC ± 0.13[.005]
3 PLC ± -
4 PLC ± -
ANGLES ± -

MATERIAL 1

FINISH 2 11

DWN	M.BINNER	06NOV2002
CHK	J.OLSON	06NOV02
APVD	J.OLSON	06NOV02
PRODUCT SPEC	108-25022	
APPLICATION SPEC	114-25018	
WEIGHT	-	

TE Connectivity

NAME
RECEPTACLE ASSEMBLY, MOD IV,
DOUBLE ROW, TOP ENTRY, .100X.100CL,
VERTICAL MOUNT, AMPMODU

SIZE	CAGE CODE	DRAWING NO	RESTRICTED TO
A2	00779	C-147424	-

CUSTOMER DRAWING | SCALE 1:1 | SHEET 2 OF 2 | REV F7

Mouser Electronics

Authorized Distributor

Click to View Pricing, Inventory, Delivery & Lifecycle Information:

TE Connectivity:

7-147424-0