THIS DRAWING IS UNPUBLISHED. RELEASED FOR PUBLICATION 2011
© COPYRIGHT 2011 - ALL RIGHTS RESERVED.

LOC	DIST
GP	00

REVISIONS

P	LTR	DESCRIPTION	DATE	DWN	APVD
	B	REDRAWN PER ECO-12-008266	27AUG2012	CJV	CWR
	C	REVISED PER ECO-13-007439	09JUL2013	CJV	CWR
	D	REVISED PER ECO-15-007873	20JUN2015	AP	SB
	E	REVISED PER ECO-15-015465	13MAY2016	CJV	DLG

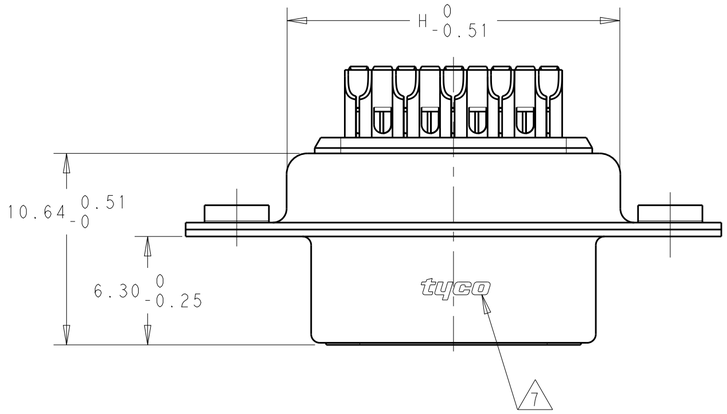

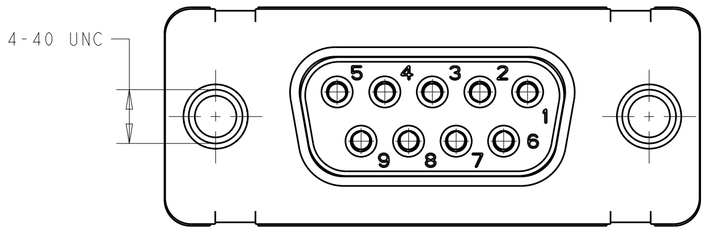

FLANGES WITH 4-40 UNC
SELF-LOCKING NUTS
TORQUE RETENTION ≥80NCM

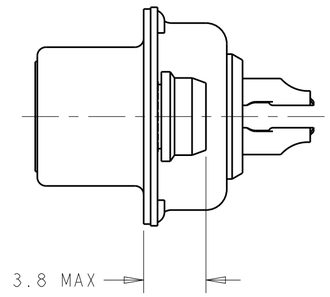

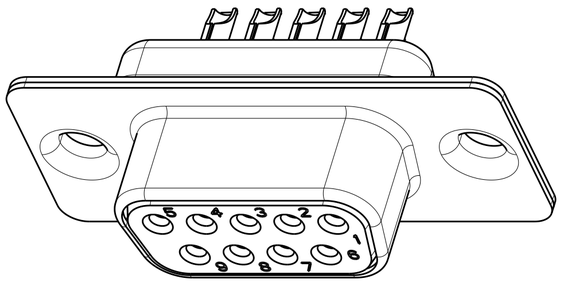

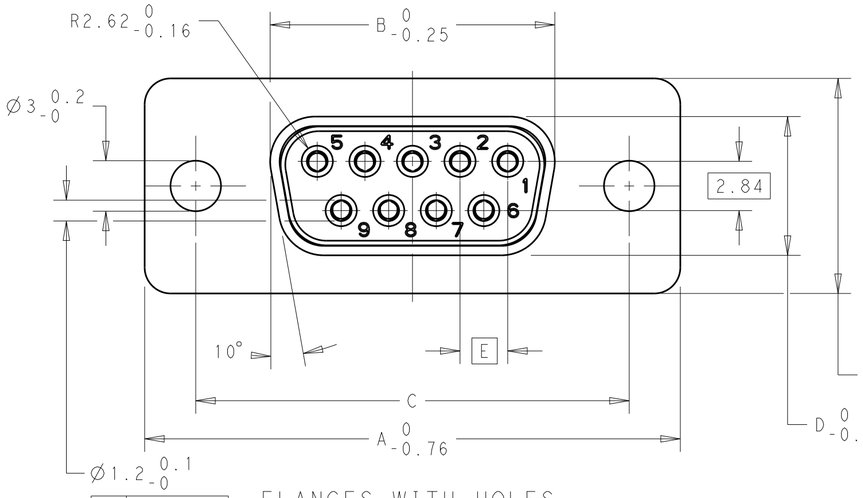

FLANGES WITH HOLES

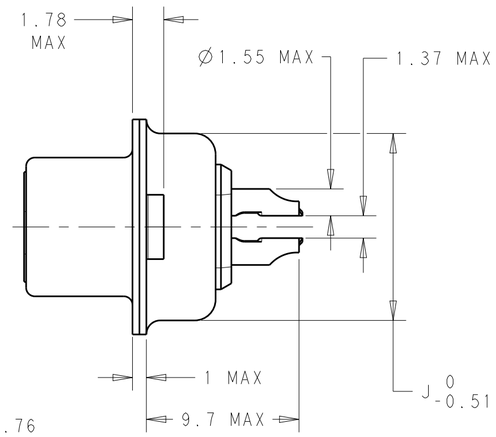

1. 9 POSITION VERSION SHOWN.
2. CONTACTS ARE STAMPED AND FORMED.
3. PACKAGED IN BLISTER PACKS.
4. PLATING DETAILS: ALL MEET PERFORMANCE LEVEL INDICATED IN TABLE PER DIN 41652.
   UNDERPLATE: NICKEL OVER ENTIRE CONTACT
   PERFORMANCE LEVEL 1 CONTACT MATING SURFACE: GOLD
   PERFORMANCE LEVEL 2 CONTACT MATING SURFACE: GOLD
   SOLDER CUP END: MATTE TIN
   SHELL PLATING: BRIGHT TIN OVER NICKEL
5. 50 CONTACT VERSION HAS 3 ROWS.
6. 4-40 UNC INSERTS COLORED BLUE.
7. ALL PARTS MARKED WITH TE LOGO.

	PERFORMANCE LEVEL	FLANGE OPTION	A	B	C	D	E	F	H	J	NO OF POSITIONS	SIEMENS PART NUMBER	TE CONNECTIVITY PART NUMBER
OBSOLETE	2	3.0 DIAMETER HOLE	67.31	52.55	61.10 +0.14/-0.11	10.87	15.75	2.76	55.58	13.82	50	V42254-A1115-B250	1393740-7
	2	3.0 DIAMETER HOLE	69.70	54.96	63.50 ±0.13	8.02	12.93	2.76	57.96	10.97	37	V42254-A1115-B237	4-1393483-1
	2	3.0 DIAMETER HOLE	53.42	38.50	47.04 ±0.13	8.02	12.93	2.76	41.53	10.97	25	V42254-A1115-B225	4-1393483-0
	2	3.0 DIAMETER HOLE	39.52	24.79	33.30 +0.15/-0.10	8.02	12.93	2.74	27.76	10.97	15	V42254-A1115-B215	3-1393483-9
	2	3.0 DIAMETER HOLE	31.19	16.46	25.00 +0.12/-0.13	8.02	12.93	2.74	19.53	10.97	9	V42254-A1115-B209	3-1393483-8
OBSOLETE	1	3.0 DIAMETER HOLE	53.42	38.50	47.04 ±0.13	8.02	12.93	2.76	41.53	10.97	25	V42254-A1115-B125	3-1393483-7
	1	3.0 DIAMETER HOLE	31.19	16.46	25.00 +0.12/-0.13	8.02	12.93	2.74	19.53	10.97	9	V42254-A1115-B109	3-1393483-6
	2	4-40 SELF-LOCKING NUTS	69.70	54.96	63.50 ±0.13	8.02	12.93	2.76	57.96	10.97	37	V42254-A1112-B237	2-1393483-2
	2	4-40 SELF-LOCKING NUTS	53.42	38.50	47.04 ±0.13	8.02	12.93	2.76	41.53	10.97	25	V42254-A1112-B225	2-1393483-1
	2	4-40 SELF-LOCKING NUTS	39.52	24.79	33.30 +0.15/-0.10	8.02	12.93	2.74	27.76	10.97	15	V42254-A1112-B215	2-1393483-0
	2	4-40 SELF-LOCKING NUTS	31.19	16.46	25.00 +0.12/-0.13	8.02	12.93	2.74	19.53	10.97	9	V42254-A1112-B209	1-1393483-9

THIS DRAWING IS A CONTROLLED DOCUMENT. DIMENSIONING AND TOLERANCING PER ASME Y14.5M-2009

DIMENSIONS: mm

TOLERANCES UNLESS OTHERWISE SPECIFIED:
0 PLC ±-
1 PLC ±-
2 PLC ±-
3 PLC ±-
4 PLC ±-
ANGLES ±1°

MATERIAL -
FINISH -

DWN RAGHAVENDRA 06MAR2012
CHK CARL ROHDE 06MAR2012
APVD CARL ROHDE 06MAR2012
PRODUCT SPEC -
APPLICATION SPEC -
WEIGHT -

TE Connectivity

NAME D-SUB SOLDERING LUGS, FEMALE CONNECTOR
-

SIZE	CAGE CODE	DRAWING NO	RESTRICTED TO
A2	00779	C-1-1393483-9	-

CUSTOMER DRAWING
SCALE 4:1 SHEET 1 OF 1 REV E

Mouser Electronics

Authorized Distributor

Click to View Pricing, Inventory, Delivery & Lifecycle Information:

TE Connectivity:
V42254A1115B215