HDP-20 Crimp Snap-In Contact Connectors

Product Selection Guide

Connector				Contacts		
Type	**Insert Material**	**Shell Type Material and Finish**	**Mounting**	**Type**	**Termination**	**Plating**
Plug (pg. 92)	94V-0 Rated Thermoplastic Black	Zinc Plated Steel Without Grounding Indents Tin Plated Steel Without Grounding Indents Tin Plated Steel With Grounding Indents	**.120** [3.05] Dia. Holes Clinch Nut, 4-40 Threads	Pins (pgs. 100, 101)	Crimp Posted	Duplex (.000030 [0.00076] Gold and Tin) Duplex (Gold Flash and Tin) Select (.000030 [0.00076] Gold and Gold Flash)
Receptacle (pg. 93)	94V-0 Rated Thermoplastic Black	Zinc Plated Steel Tin Plated Steel	**.120** [3.05] Dia. Holes Clinch Nuts, 4-40 Threaded	Sockets (pgs. 100, 101)	Crimp Posted	Duplex (.000030 [0.00076] Gold and Tin) Duplex (Gold Flash and Tin) Select (.000030 [0.00076] Gold and Gold Flash)

Catalog 82068
Revised 4-12

www.te.com

Dimensions are shown for reference purposes only. Specifications subject to change.

Dimensions are in inches and millimeters unless otherwise specified.
USA: +1 (800) 522-6752

Canada: +1 (905) 475-6222
Mexico/C. Am.: +52 (0) 55-1106-0800
Latin/S. Am.: +54 (0) 11-4733-2200
Germany: +49 (0) 6251-133-1999

UK: +44 (0) 800-267666
France: +33 (0) 1-3420-8686
Netherlands: +31 (0) 73-6246-999
China: +86 (0) 400-820-6015

HDP-20 Crimp Snap-In Contact Connectors (Continued)

Product Facts

- **Shell sizes offer wide choice of contact positions—9, 15, 25, 37 and 50**
- **Lower cost, commercial version of the military approved series**
- **Tin or zinc plated shells, with or without grounding indents**
- **Crimp snap-in contacts allows loading of only the number of contacts being used**
- **Available with shielding hardware and shielding enclosure kits**
- **Numerous cable clamps and mating hardware options**
- **Low cost, high performance, precision-formed crimp contacts**
- **Machine applied terminations assure highest production rates at lowest applied cost**
- **Intermateable with any size 20 Subminiature D connector dimensionally complying with MIL-C-24308**
- **Recognized under the Component Program of Underwriters Laboratories Inc., File No. E28476**
- **Listed under Underwriters Laboratories Inc., Standard 1863, Communication Circuit Accessories, File No. E81956**
- **Certified by Canadian Standards Association, File No. LR 1088108 (LR 7189-207)**

Section Contents

Plug and Receptacle Connectors 92, 93
Basic Shielding Hardware Kits 94, 95
Shielding Hardware Enclosure Kits 96, 97
Preassembled Shielded Connector Kits 98
Ferrules for Shielding Hardware Kits 99
Contacts 100, 101
Application Tooling 102

Unshielded Cable Clamps

One-Piece Cable Clamp 180°/120° Quik-Snap (pg. 134)

Box and Lid Straight/90° Exit (pg. 137)

Box and Lid with Male Screw Retainers (pg. 137)

Clam Shell Straight/45° Exit (pg. 138)

Clam Shell Straight/45° Exit with Male Screw Retainers (pg. 138)

Shielded Cable Clamps and Shielding Hardware and Enclosure Kits

Straight Exit RFI/EMI Shields for Jacketed Cable (pgs. 139, 142)

90° Exit Die Cast RFI/EMI Shields for Jacketed Cable (pg. 142)

Basic Shielding Hardware Kits (pgs. 94, 95)

Shielding Hardware Enclosure Kits (pgs. 96, 97)

Mounting and Mating Hardware

Keying Plug (pg. 155)

Male Screw Retainers (pgs. 146, 147)

Female Screwlocks (pg. 148)

Locking Posts and Slide Latches (pgs. 149, 151)

Spring Latch, Two-Piece (pg. 152)

Latching Blocks (pgs. 153, 154)

Standoff Bushings (pg. 155)

Contact Retention Features

Pin

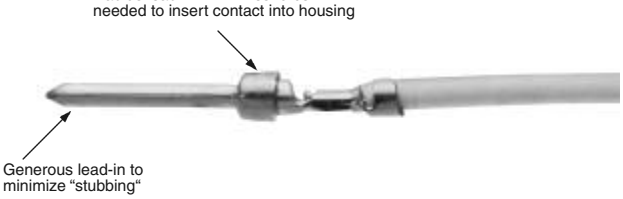

Socket

Housing Cutaway

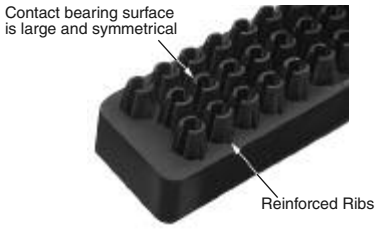

Catalog 82068
Revised 4-12

www.te.com

Dimensions are shown for reference purposes only. Specifications subject to change.

Dimensions are in inches and millimeters unless otherwise specified.
USA: +1 (800) 522-6752

Canada: +1 (905) 475-6222
Mexico/C. Am.: +52 (0) 55-1106-0800
Latin/S. Am.: +54 (0) 11-4733-2200
Germany: +49 (0) 6251-133-1999

UK: +44 (0) 800-267666
France: +33 (0) 1-3420-8686
Netherlands: +31 (0) 73-6246-999
China: +86 (0) 400-820-6015

HDP-20 Crimp Snap-In Contact Connectors (Continued)

Material and Finish:

Shell—Steel, zinc or tin plated
Insert—94V-0 rated thermoplastic, black

Mounting Holes:

Standard—.120 [3.05] Dia.
Clinch Nut—4-40 threads with self-locking feature

Related Product Data:

Contact Arrangements—page 40
Performance Characteristics—page 41
Contacts—pages 100, 101
Application Tooling—page 102
Mateable Connectors:
HDE—pages 110-123
HDP—pages 90-102
HD-20 Board Mount—pages 54-71, 78-85, 87-89
Mating/Panel Mounting—page 42
Cable Clamps—pages 132, 133, 135-137, 140, 141, 144, 145
Mating Hardware—pages 146-150, 153, 155

Technical Documents:

Product Specification—108-40005
Application Specifications—114-10000, 114-40030

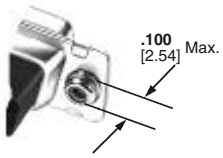

Clinch Nut
(Plug and Receptacle)

Note: Instruction Sheets for TE Tooling are packaged with the tooling. For additional information call the Tooling Assistance Center: **1-800-722-1111.**

Plug

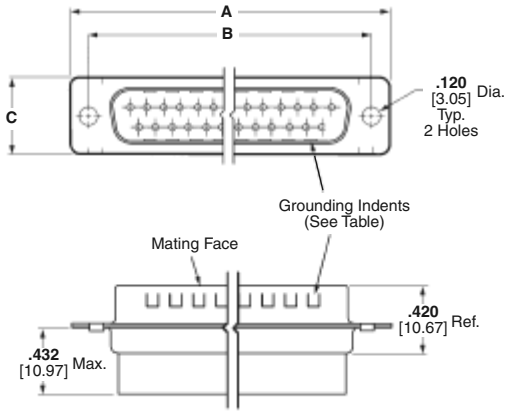

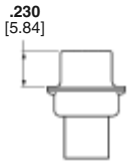

Cable Connectors

Catalog 82068
Revised 4-12

www.te.com

Dimensions are shown for reference purposes only. Specifications subject to change.

Dimensions are in inches and millimeters unless otherwise specified.
USA: +1 (800) 522-6752

Canada: +1 (905) 475-6222
Mexico/C. Am.: +52 (0) 55-1106-0800
Latin/S. Am.: +54 (0) 11-4733-2200
Germany: +49 (0) 6251-133-1999

UK: +44 (0) 800-267666
France: +33 (0) 1-3420-8686
Netherlands: +31 (0) 73-6246-999
China: +86 (0) 400-820-6015

HDP-20 Crimp Snap-In Contact Connectors (Continued)

Receptacle

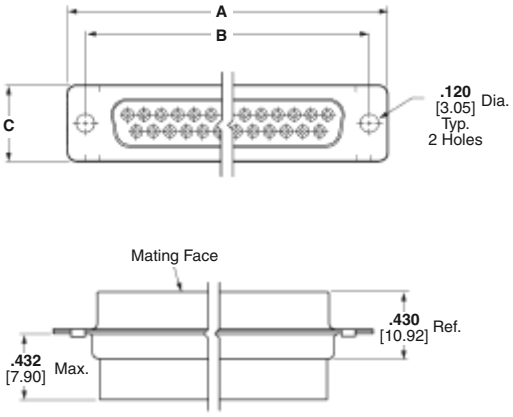

Shell Size	No. of Contact Positions	Dimensions A	Dimensions B	Dimensions C	Insert Material	Mounting Method	Plug Part Numbers: Zinc Plated Shell	Plug Part Numbers: Tin Plated Shell: Without Grounding Indents	Plug Part Numbers: Tin Plated Shell: With Grounding Indents	Receptacle Part Nos.: Zinc Plated Shell	Receptacle Part Nos.: Tin Plated Shell
1	9	**1.213** 30.81	**.984** 24.99	**.494** 12.55	94V-0	Standard	205204-9	205204-8	205204-4	205203-8	205203-3
						Clinch Nut	—	1658642-2	1658642-1	—	1658643-1
2	15	**1.541** 39.14	**1.312** 33.33	**.494** 12.55	94V-0	Standard	205206-9	205206-8	205206-3	205205-7	205205-2
						Clinch Nut	—	—	5745908-2	—	1658644-1
3	25	**2.088** 53.04	**1.852** 47.04	**.494** 12.55	94V-0	Standard	5205208-1	207464-7	207464-2	5205207-1	207463-1
						Clinch Nut	—	—	5745036-2	207516-6	207516-5
4	37	**2.729** 69.32	**2.500** 63.50	**.494** 12.55	94V-0	Standard	205210-8	205210-7	205210-3	205209-7	205209-2
						Clinch Nut	—	—	745135-4	—	5207661-3
5	50	**2.635** 66.93	**2.406** 61.11	**.605** 15.37	94V-0	Standard	1658641-3	1658641-1	1658641-2	1658640-2	1658640-1
						Clinch Nut	—	—	5745883-2	—	5745884-1

Note: Plugs accept size 20 DF pin contacts and receptacles accept size 20 DF socket contacts.

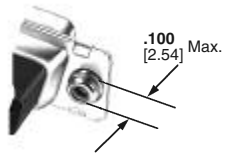

Clinch Nut
(Plug and Receptacle)

Note: Instruction Sheets for TE Tooling are packaged with the tooling. For additional information call the Tooling Assistance Center: **1-800-722-1111.**

Note: All part numbers are RoHS compliant.

Catalog 82068
Revised 4-12

www.te.com

Dimensions are shown for reference purposes only. Specifications subject to change.

Dimensions are in inches and millimeters unless otherwise specified.
USA: +1 (800) 522-6752

Canada: +1 (905) 475-6222
Mexico/C. Am.: +52 (0) 55-1106-0800
Latin/S. Am.: +54 (0) 11-4733-2200
Germany: +49 (0) 6251-133-1999

UK: +44 (0) 800-267666
France: +33 (0) 1-3420-8686
Netherlands: +31 (0) 73-6246-999
China: +86 (0) 400-820-6015

HDP-20 Basic Shielding Hardware Kits

Plug

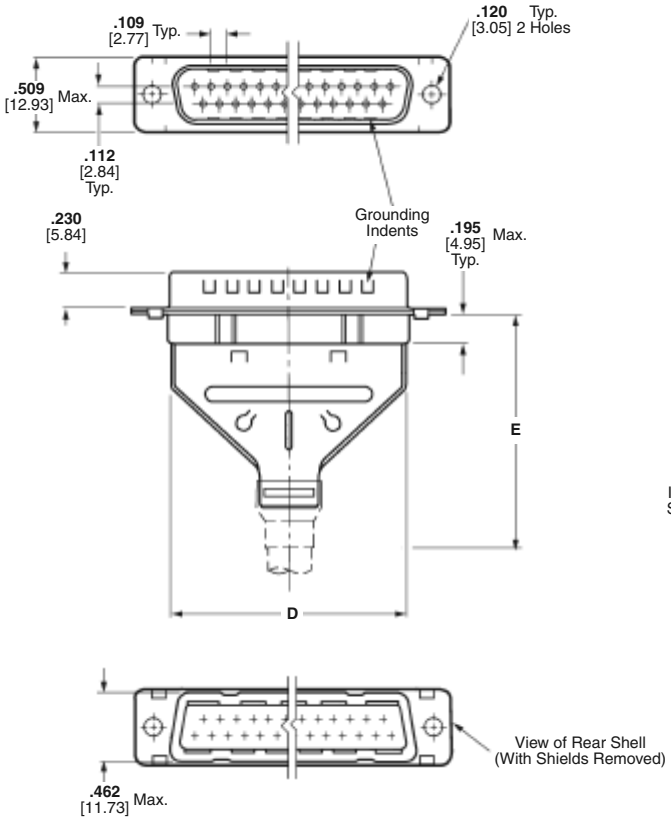

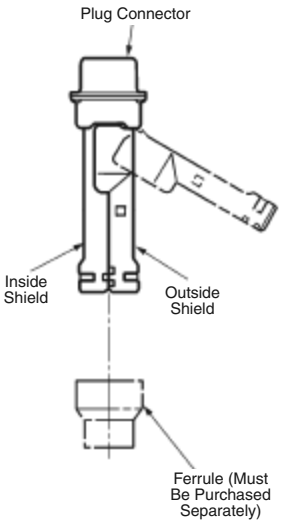

Each kit contains:

- Connector
- Inner shield
- Outer shield

Contacts and ferrules must be purchased separately.

Material and Finish:

Connector Shells—Steel, tin plated
Connector Insert—94V-0 rated thermoplastic, black
Shield—Steel, tin plated

Related Product Data:

Contact Arrangements—page 40
Performance Characteristics—page 41
Contacts—pages 100, 101
Application Tooling—page 102
Mateable Connectors:
HDE—pages 110-123
HDP—pages 90-102
HD-20 Board Mount—pages 54-71, 78-85, 87-89
Mating/Panel Mounting—page 42
Mating Hardware—pages 146-150, 153, 155
Ferrules—page 99

Technical Documents:

Product Specifications—
108-40005
108-40030
Application Specifications—
114-10000
114-40030
Instruction Sheet—408-9010

Note: Instruction Sheets for TE Tooling are packaged with the tooling. For additional information call the Tooling Assistance Center: **1-800-722-1111.**

Catalog 82068
Revised 4-12

www.te.com

Dimensions are shown for reference purposes only. Specifications subject to change.

Dimensions are in inches and millimeters unless otherwise specified.
USA: +1 (800) 522-6752

Canada: +1 (905) 475-6222
Mexico/C. Am.: +52 (0) 55-1106-0800
Latin/S. Am.: +54 (0) 11-4733-2200
Germany: +49 (0) 6251-133-1999

UK: +44 (0) 800-267666
France: +33 (0) 1-3420-8686
Netherlands: +31 (0) 73-6246-999
China: +86 (0) 400-820-6015

HDP-20 Basic Shielding Hardware Kits (Continued)

Receptacle

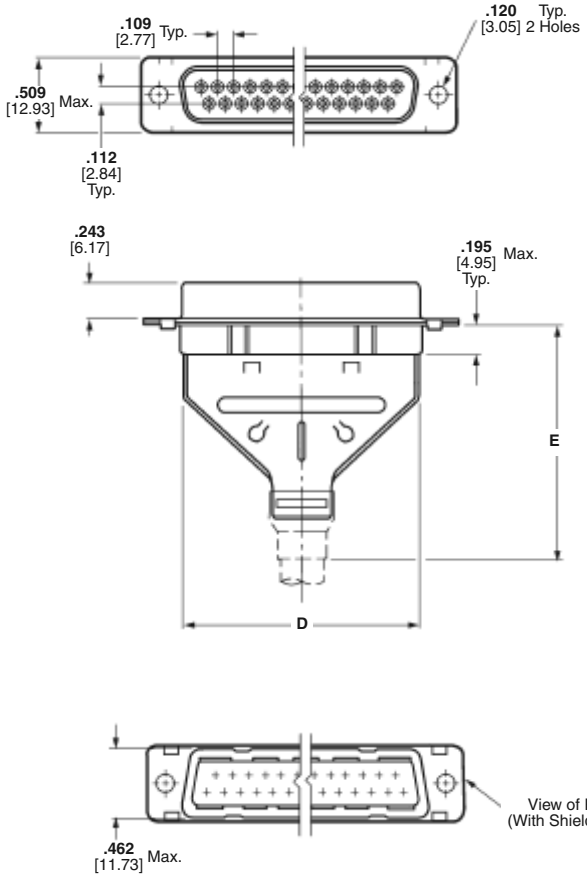

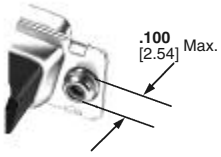

Clinch Nut
(Plug and Receptacle)

Shell Size	No. of Contact Positions	Dimensions D	Dimensions E	Recommended Cable Outer Dia. Range	Max. Inner Cable Bundle Dia.†	Mounting Method	Plug Kit Numbers	Receptacle Kit Numbers
1	9	**.700** 17.78	**1.535** 38.99	**.165-.455** 4.19-11.56	**.350** 8.89	Standard	1658645-1	1658646-1
						Clinch Nut	5748526-1	5748536-1
2	15	**1.024** 26.01	**1.535** 38.99	**.165-.455** 4.19-11.56	**.350** 8.89	Standard	1658647-1	5747539-1
						Clinch Nut	5750636-1	5787908-1
3	25	**1.576** 40.03	**1.535** 38.99	**.165-.455** 4.16-11.56	**.350** 8.89	Standard	1658648-1	1658649-1
						Clinch Nut	—	1658662-1
4	37	**2.215** 56.26	**1.892** 48.06	**.338-.562** 8.59-14.28	**.450** 11.43	Standard	1658650-1	1658651-1
						Clinch Nut	5786929-1	—
5	50	**2.120** 53.85	**1.876** 47.65	**.338-.480** 8.59-12.19	**.450** 11.43	Standard	1658652-1	1658653-1

Notes: 1. Plugs accept size 20 DF pin contacts and receptacles accept size 20 DF socket contacts.
2. Components of the kits are shipped unassembled and bulk-packaged in quantities of 100 pieces.
†Maximum cable diameter after jacket and braid removed.

Note: All part numbers are RoHS compliant.

Catalog 82068
Revised 4-12

www.te.com

Dimensions are shown for reference purposes only. Specifications subject to change.

Dimensions are in inches and millimeters unless otherwise specified.
USA: +1 (800) 522-6752

Canada: +1 (905) 475-6222
Mexico/C. Am.: +52 (0) 55-1106-0800
Latin/S. Am.: +54 (0) 11-4733-2200
Germany: +49 (0) 6251-133-1999

UK: +44 (0) 800-267666
France: +33 (0) 1-3420-8686
Netherlands: +31 (0) 73-6246-999
China: +86 (0) 400-820-6015

HDP-20 Shielding Hardware Enclosure Kits

Each Kit Contains:

- Connector
- Inner shield
- Outer shield
- Enclosure
- Two jackscrews

Contacts and ferrules must be purchased separately.

Material and Finish:

Connector Shells—Steel, tin plated.
Connector Insert—94V-0 rated thermoplastic, black
Shield—Steel, tin plated
Enclosure—PVC, black
Jackscrews—Zinc alloy

Related Product Data:

Contact Arrangements—page 40
Performance Characteristics—page 41
Contacts—pages 100, 101
Application Tooling—page 102
Mateable Connectors:
HDE—pages 110-123
HDP—pages 90-102
HD-20 Board Mount—pages 54-71, 78-85, 87-89
Mating/Panel Mounting—page 42
Mating Hardware—pages 146-150, 153, 155
Ferrules—page 99

Technical Documents:

Product Specifications—
108-40005
108-40030
Application Specifications—
114-10000
114-40030
Instruction Sheet—408-9172

Note: Instruction Sheets for TE Tooling are packaged with the tooling. For additional information call the Tooling Assistance Center: **1-800-722-1111.**

Plug

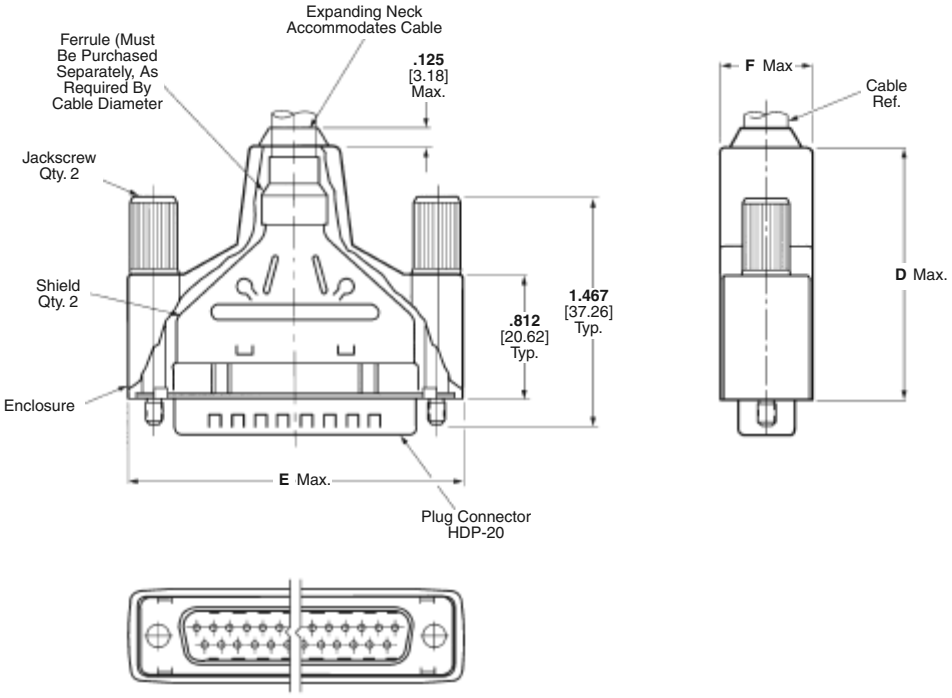

Catalog 82068
Revised 4-12

www.te.com

Dimensions are shown for reference purposes only. Specifications subject to change.

Dimensions are in inches and millimeters unless otherwise specified.
USA: +1 (800) 522-6752

Canada: +1 (905) 475-6222
Mexico/C. Am.: +52 (0) 55-1106-0800
Latin/S. Am.: +54 (0) 11-4733-2200
Germany: +49 (0) 6251-133-1999

UK: +44 (0) 800-267666
France: +33 (0) 1-3420-8686
Netherlands: +31 (0) 73-6246-999
China: +86 (0) 400-820-6015

HDP-20 Shielding Hardware Enclosure Kits (Continued)

Receptacle

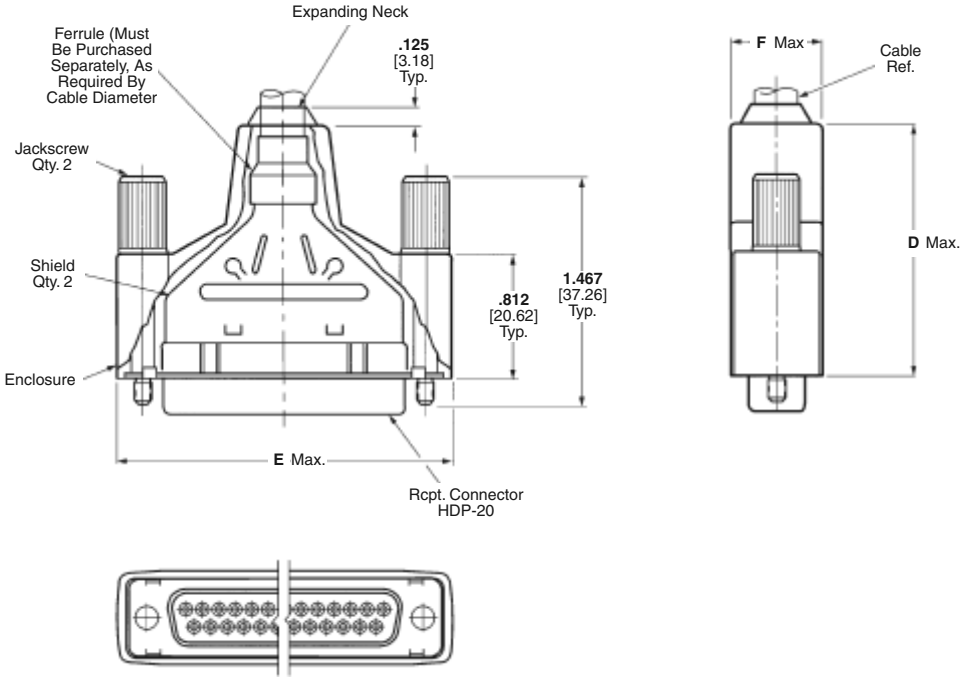

Shell Size	No. of Contact Positions	Dimensions D	E	F	Recommended Cable Outer Diameter Range	Max. Inner Cable Bundle Dia.†	Insert Material	Kit Numbers Plug	Receptacle	Shielding Enclosure Expansion Tool Cable O.D. (Max.)	Part Number
1	9	**1.660** 42.16	**1.355** 34.42	**.630** 16.00	**.190-.330** 4.83-8.38	**.330** 8.38	94V-0	1658655-1	1658654-1	**.330** 8.38	58241-4
2	15	**1.660** 42.16	**1.685** 42.80	**.630** 16.00	**.190-.330** 4.83-8.38	**.330** 8.38	94V-0	1658657-1	1658656-1		
3	25	**1.660** 42.16	**2.210** 56.13	**.630** 16.00	**.217-.435** 5.51-11.05	**.350** 8.89	94V-0	1658659-1	1658658-1	**.450** 11.43	58241-1
4	37	**2.010** 51.05	**2.865** 72.77	**.730** 18.54	**.338-.562** 8.59-14.28	**.450** 11.43	94V-0	5747958-1	1658660-1	**.572** 14.52	58241-2
5	50	**2.010** 51.05	**2.775** 70.49	**.730** 18.54	**.338-.562** 8.59-14.28	**.450** 11.43	94V-0	1658661-1	5747959-1		

Notes: 1. Plugs accept size 20 DF pin contacts and receptacles accept size 20 DF socket contacts.
2. Components of the kits are shipped unassembled and bulk-packaged in quantities of 100 pieces.
†Maximum cable diameter after jacket and braid removed.

Note: All part numbers are RoHS compliant.

Catalog 82068
Revised 4-12

www.te.com

Dimensions are shown for reference purposes only. Specifications subject to change.

Dimensions are in inches and millimeters unless otherwise specified.
USA: +1 (800) 522-6752

Canada: +1 (905) 475-6222
Mexico/C. Am.: +52 (0) 55-1106-0800
Latin/S. Am.: +54 (0) 11-4733-2200
Germany: +49 (0) 6251-133-1999

UK: +44 (0) 800-267666
France: +33 (0) 1-3420-8686
Netherlands: +31 (0) 73-6246-999
China: +86 (0) 400-820-6015

Shielded Connector, Preassembled Kit

Designed to meet the requirements of Local Area Networking, this Subminiature D Shielded Connector Kit is available with slide latches attached to the receptacle. The receptacle is shielded and covered with a durable plastic enclosure. This shielding decreases emissions and provides an effective EMI/RFI barrier.

Preassembled connector kits are available in Subminiature D, shell size 2, 15-position configuration and accept crimp, snap-in HD-20 contacts. Contacts are available separately and allow for selective positioning.

Other sizes and styles can be made available, consult TE.

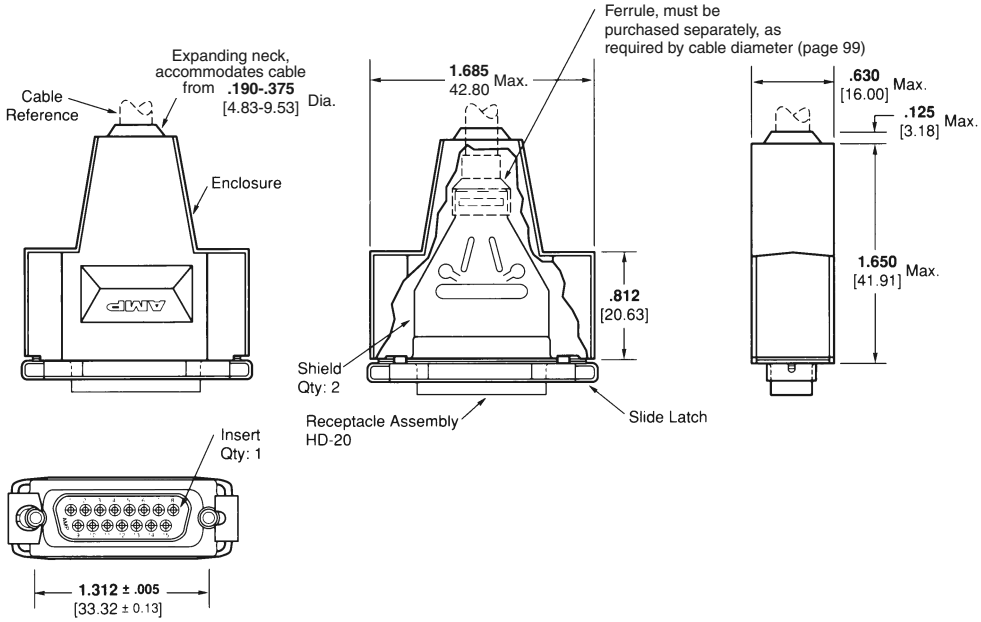

Receptacle
Part No. 749246-1

Note: Instruction Sheets for TE Tooling are packaged with the tooling. For additional information call the Tooling Assistance Center: **1-800-722-1111.**

Material and Finish:

Inserts—94V-0 rated nylon, black
Enclosures—Elastomer, styrene polyolefin, or PVC, black
Shields and Shells—Carbon steel per ASTM A109, plated with .000200 [0.00508] min. tin over .000050 [0.00127] min. copper

Related Product Data:

Contact Arrangements—page 40
Performance Characteristics—page 41
Contacts—pages 100, 101
Application Tooling—page 102
Ferrules—page 99

Technical Documents:

Product Specifications—108-40005, 108-40030, 108-40032
Application Specifications—114-10000 & 114-40030

Note: All part numbers are RoHS compliant.

Catalog 82068
Revised 4-12

www.te.com

Dimensions are shown for reference purposes only. Specifications subject to change.

Dimensions are in inches and millimeters unless otherwise specified.
USA: +1 (800) 522-6752

Canada: +1 (905) 475-6222
Mexico/C. Am.: +52 (0) 55-1106-0800
Latin/S. Am.: +54 (0) 11-4733-2200
Germany: +49 (0) 6251-133-1999

UK: +44 (0) 800-267666
France: +33 (0) 1-3420-8686
Netherlands: +31 (0) 73-6246-999
China: +86 (0) 400-820-6015

HDP-20 Ferrules for Shielding Hardware Kits

Ferrules for Shielding Hardware Kits

Stepped

Straight

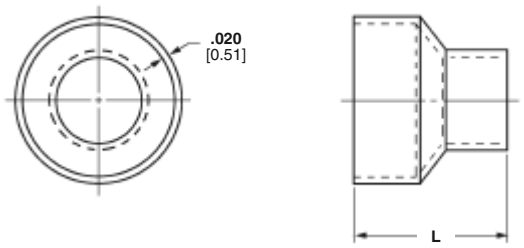

Shell Sizes	Style	L Dim.	Cable Diameter	Part Numbers	
				Ferrule	Die Sets*
1-3	Stepped	**.440** 11.18	**.165-.190** 4.19-4.83	3-747579-0	543424-3
1-3	Stepped	**.440** 11.18	**.190-.217** 4.83-5.51	3-747579-0	543424-2
1-3	Stepped	**.440** 11.18	**.217-.246** 5.51-6.25	3-747579-0	543424-8
1-3	Stepped	**.440** 11.18	**.246-.284** 6.25-7.21	3-747579-2	543424-1
1-3	Stepped	**.440** 11.18	**.284-.324** 7.21-8.23	3-747579-2	543424-7
1-3	Stepped	**.440** 11.18	**.324-.375** 8.23-9.53	3-747579-4	543424-6
1-3	Straight	**.440** 11.18	**.375-.437** 9.53-11.10	2-747579-7	543424-5
1-3	Straight	**.440** 11.18	**.400-.460** 10.16-11.56	3-747579-6	543424-4
4-5	Stepped	**.625** 15.88	**.230-.265** 5.84-6.73	2-747580-4	543425-2
4-5	Stepped	**.625** 15.88	**.338-.385** 8.59-9.78	2-747580-3	543425-1
4-5	Stepped	**.625** 15.88	**.375-432** 9.53-10.97	2-747580-1	58238-1
4-5	Stepped	**.625** 15.88	**.422-.490** 10.72-12.45	3-747580-1	58237-2
4-5	Straight	**.625** 15.88	**.480-.562** 12.19-14.28	2-747580-2	58237-1

*Die sets used with Hand Crimping Tool Part No. 543344-1 or Pneumatic Bench Tool Part No. 312522-3 equipped with Die Set Holder Part No. 58449-1.

Material and Finish:

Steel (annealed), tin plated

Related Product Data:

Shielding Hardware and Enclosure Kits—pages 94-98

Technical Documents:

Instruction Sheets—
408-9507
408-9508
408-9243
408-9242

Note: Instruction Sheets for TE Tooling are packaged with the tooling. For additional information call the Tooling Assistance Center: **1-800-722-1111.**

Application Tooling for Shielding Hardware Kits

Hand Crimping Tool No. 543344-1 (Requires Die Sets, see table above.)

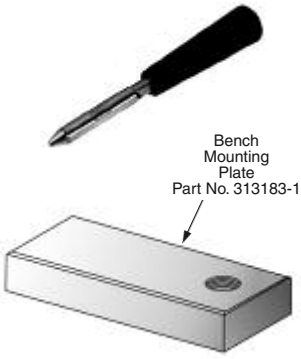

Shielding Enclosure Expansion Tools
Part No. 58241-1 (.450 [11.43])†
58241-2 (.572 [14.53])†
58241-4 (.330 [8.38])†
†Maximum Cable Diameter
(Instruction Sheet—408-9172)

Pneumatic Bench Tool No. 312522-3 (Requires Die Set Holder No. 58449-1.)

Note: All part numbers are RoHS compliant.

Catalog 82068
Revised 4-12

www.te.com

Dimensions are shown for reference purposes only. Specifications subject to change.

Dimensions are in inches and millimeters unless otherwise specified.
USA: +1 (800) 522-6752

Canada: +1 (905) 475-6222
Mexico/C. Am.: +52 (0) 55-1106-0800
Latin/S. Am.: +54 (0) 11-4733-2200
Germany: +49 (0) 6251-133-1999

UK: +44 (0) 800-267666
France: +33 (0) 1-3420-8686
Netherlands: +31 (0) 73-6246-999
China: +86 (0) 400-820-6015

HDP-20 Connector Contacts, Precision Formed

Contact Size 20 DF
Pin Diameter .040 [1.02]

Material and Finish:

Pin—Brass

Socket—Phosphor bronze

Plated

A—Select—Gold flash over nickel on entire contact, with additional .000030 [0.00076] gold on mating end

B—Duplex—.000030 [0.00076] gold on mating end, tin on termination end, with entire contact nickel underplated

C—Gold flash over nickel on entire contact

D—Duplex—Gold flash on mating end, tin on termination end, with entire contact nickel underplated

Related Product Data:

Performance Characteristics—page 41

Connectors used with:
HDP—pages 92-97

Application Tooling—page 102

Technical Documents:

Product Specification—108-40005

Application Specifications—
114-10000
114-40030

Note: Instruction Sheets for TE Tooling are packaged with the tooling. For additional information call the Tooling Assistance Center: **1-800-722-1111.**

Crimp Snap-In Contacts

With Insulation Support

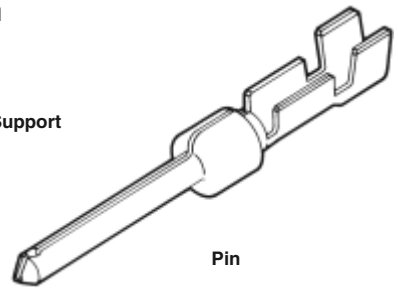

Pin

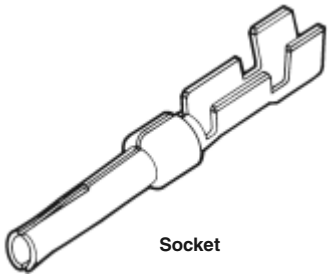

Socket

Wire Size Range AWG [mm²]	Ins. Dia. Max.	Contact Finish (Plating Code)	Contact Part Numbers Pin Strip Form	Pin Loose Form	Socket Strip Form	Socket Loose Form	Hand Tools for Loose Form Contacts: PRO-CRIMPER II Hand Tool	CERTI-CRIMP II Hand Tool (Color Code)	Applicators* for Strip Form Contacts
28-24 0.08-0.2	.040 1.02	A	66507-3	66507-9	66505-3	66505-9	58448-2	91503-1 (Blue Dot)	466423-4** 466901-1***
		B	1658540-4	1658540-5	1658538-2	—			
		C	66507-4	1-66507-0	66505-4	1-66505-0			
		D	1658540-1	1658540-2	1658538-3	1658538-1			
	.060 1.52	A	66682-2	66682-4	66683-2	66683-4	—	91549-1 (Black Dot)	466963-1***
		B	5066682-9	—	1-5066683-0	—			
		D	5066682-6	—	5066683-7	—			
26-22 0.15-0.4	.040 1.27	A	745254-2	745254-6	745253-2	745253-6	—	91525-1 (Yellow Dot)	466968-1***
		B	1658544-2	1658544-1	1658543-2	1658543-1			
		C	745254-3	745254-7	745253-3	745253-7			
		D	1658544-3	—	1658543-3	—			
24-20 0.2-0.6	.060 1.52	A	66506-3	66506-9	66504-3	66504-9	58448-2	91503-1 (Red Dot)	466422-4** 466900-1***
		B	1658539-1	1658539-3	1658537-3	1658537-4			
		C	66506-4	1-66506-0	66504-4	1-66504-0			
		D	1658539-2	1658539-4	1658537-1	1658537-2			

*For Part Nos. of Special Applicators and Applicators for other model machines, call the TE Tooling Assistance Center at **1-800-722-1111**.
**For use with AMP-O-LECTRIC Model "G" Terminating Machine.
***For use with AMP-O-MATIC Model II Stripper-Crimper Machine.

Without Insulation Support

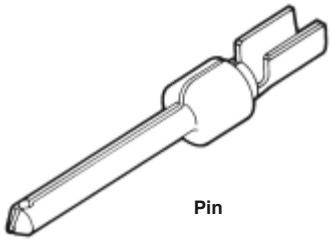

Pin

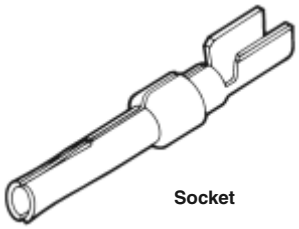

Socket

Insertion/Extraction Tool No. 91285-1

Instruction Sheet—408-9404

Wire Size Range AWG [mm²]	Ins. Dia. Max.	Contact Finish (Plating Code)	Contact Part Numbers Pin Strip Form	Socket Strip Form	Hand Tools for Loose Form Contacts: CERTI-CRIMP II Hand Tool (Color Code)	Applicators* for Strip Form Contacts
28-24 0.08-0.2	.068 1.73	A	205310-2	205311-3	91548-1 (Blue Dot)	466903-1***
24-20 0.2-0.6	.068 1.73	A	205202-2	205201-3	91548-1 (Red Dot)	466902-1***
		C	205202-6	205201-6		
22-18 0.4-0.8	.068 1.73	A	745229-2	745230-2	91513-1 (Green Dot)	466996-1***
		B	1658541-1	1658542-2		
		C	745229-5	745230-5		
		D	—	1658542-1		

Note: Wire insulation diameter is limited by the connector housing cavity and clearance for the insertion/extraction tool.

*For Part Nos. of Special Applicators and Applicators for other model machines, call the TE Tooling Assistance Center at **1-800-722-1111**.
***For use with AMP-O-MATIC Model II Stripper-Crimper Machine.

Note: All part numbers are RoHS compliant.

Catalog 82068
Revised 4-12

www.te.com

Dimensions are shown for reference purposes only. Specifications subject to change.

Dimensions are in inches and millimeters unless otherwise specified.
USA: +1 (800) 522-6752

Canada: +1 (905) 475-6222
Mexico/C. Am.: +52 (0) 55-1106-0800
Latin/S. Am.: +54 (0) 11-4733-2200
Germany: +49 (0) 6251-133-1999

UK: +44 (0) 800-267666
France: +33 (0) 1-3420-8686
Netherlands: +31 (0) 73-6246-999
China: +86 (0) 400-820-6015

HDP-20 Connector Contacts, Precision Formed (Continued)

Contact Size 20 DF Pin Diameter .040 [1.02]

Material and Finish:

Pin—Brass

Socket—Phosphor bronze

Plated:
A—Duplex plated .000030 [0.00076] gold on mating end, with entire contact .000050 [0.00127] min. nickel underplated
B—Duplex plated gold flash on mating end, with entire contact .000050 [0.00127] min. nickel underplated

Related Product Data:

Performance Characteristics—page 41

Connectors used with:
HDP—pages 92, 93

Technical Documents:

Product Specification—108-40005

Application Specifications—
114-10000
114-40030

Note: Instruction Sheets for TE Tooling are packaged with the tooling. For additional information call the Tooling Assistance Center: **1-800-722-1111.**

.025 [0.64] Square Posted Contacts

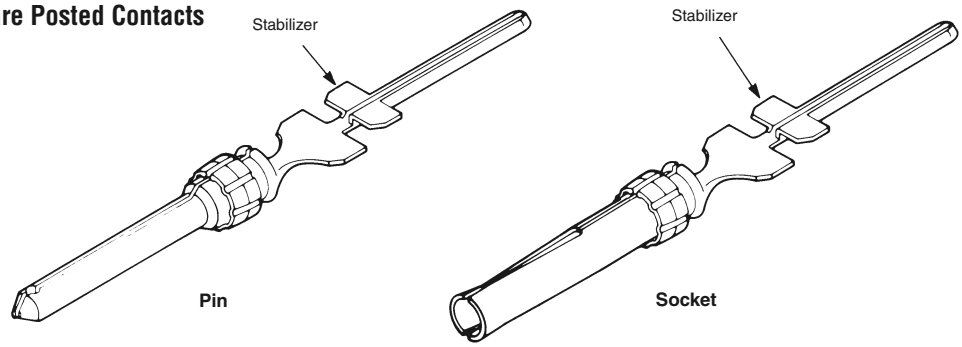

Contact Finish (Plating Code)	Loose Form Contact Numbers							
	.125 [3.18] Post Length*		.188 [4.78] Post Length*		.427 [10.85] Post Length*		.651 [16.54] Post Length*	
	Pin	Socket	Pin	Socket	Pin	Socket	Pin	Socket
A	—	5-745288-5	5-745287-4	7-745288-0	4-745287-7	5-745288-8	5-745287-0	6-745288-1
B	—	—	—	—	—	7-745288-2	—	7-745288-2

*Length of post extending from rear of HDP-20 metal-shell connector.

Contact Size 20 DF Pin Diameter .040 [1.02]

Material and Finish:

Pin—Brass

Socket—Phosphor bronze

Plated—Gold flash over nickel on entire contact, with additional .000030 [0.00076] gold on mating end

Related Product Data:

Performance Characteristics—page 41

Connectors used with:
HDP—pages 92-97

Technical Documents:

Product Specification—108-40005

Application Specification—
114-40030

Solder Cup Contacts, Snap-In

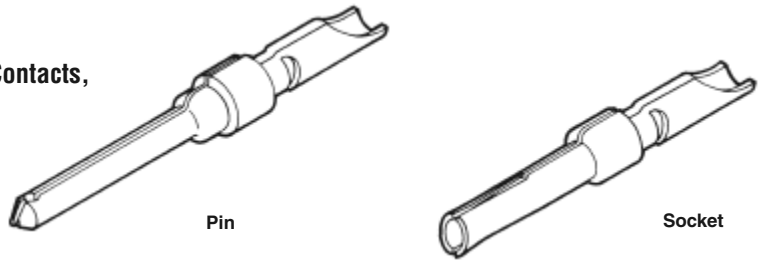

18 AWG Max. Wire (.046 [1.17] Max. Conductor Diameter)

Strip Form Contact Number		Loose Form Contact Number	
Pin	Socket	Pin	Socket
66570-2	66569-2	66570-3	66569-3

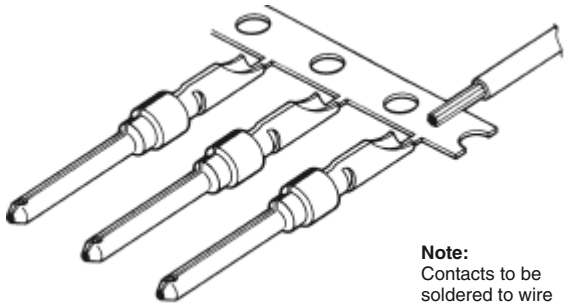

Note:
Contacts to be soldered to wire before being inserted into housing

Insertion/Extraction Tool No. 91285-1

This tool includes interchangeable tips to Insert/Extract:
Size 22, 28-22 AWG [0.08-0.4 mm²]
Size 20, Posted Contacts
(Instruction Sheet—408-9404)

Note: All part numbers are RoHS compliant.

Catalog 82068
Revised 4-12

www.te.com

Dimensions are shown for reference purposes only. Specifications subject to change.

Dimensions are in inches and millimeters unless otherwise specified.
USA: +1 (800) 522-6752

Canada: +1 (905) 475-6222
Mexico/C. Am.: +52 (0) 55-1106-0800
Latin/S. Am.: +54 (0) 11-4733-2200
Germany: +49 (0) 6251-133-1999

UK: +44 (0) 800-267666
France: +33 (0) 1-3420-8686
Netherlands: +31 (0) 73-6246-999
China: +86 (0) 400-820-6015

HDP-20 Application Tooling

HDP-20 contacts may be applied by a variety of hand tools and machines. For low production runs, repairs and prototype work, we offer either our premium CERTI-CRIMP Hand Tool or our commercial PRO-CRIMPER II Hand Tool. For medium-volume production, you have the choice of our AMP-O-LECTRIC Model "G" Terminating Machine, our new Model "M" Terminating Machine, or our AMP-O-MATIC Model II Stripper-Crimper Machine. The Stripper-Crimper is typically used for terminating the wires of jacketed cable. All three machines can be bench mounted.

For production requirements ranging from non-stop high volumes to countless series of short runs, our popular AMPOMATOR CLS IV+ fully-automated lead-making machine is an ideal choice.

For further information about these or other TE hand tools and machines, call the TE Tooling Assistance Center at **1-800-722-1111.**

AMPOMATOR CLS IV+ Lead-Making Machine

This versatile machine now incorporates two AMP-O-LECTRIC Model "G" Terminating Units. Basically, it produces single-wire leads in lengths from 1.62 [41.2] to 1000 [25 400]. It measures, cuts, strips and terminates wire sizes from 26 to 10 AWG [0.12 to 6 mm^2] stranded and 26 to 16 AWG [0.12 to 1.4 mm^2] solid. Production rates range up to 4800 leads per hour for 3 [76.2] lengths.

The machine is microprocessor controlled, and programmed and operated with an easy-to-follow, menu-driven touchscreen. It can retain data for up to 200 lead assemblies. Off-line programming is also possible with optional software OffLine-Plus for Windows 95, **Part No. 189263-2**.

Air requirement is 90 psi [6.21] bar minimum at 15 scfm [0.0071 m^3/s]. Power requirement is single-phase 220 VAC, 50 or 60 Hz, 25 A.

For further information request Catalog 124324.

Note: All part numbers are RoHS compliant.

Catalog 82068
Revised 4-12

www.te.com

Dimensions are shown for reference purposes only. Specifications subject to change.

Dimensions are in inches and millimeters unless otherwise specified.
USA: +1 (800) 522-6752

Canada: +1 (905) 475-6222
Mexico/C. Am.: +52 (0) 55-1106-0800
Latin/S. Am.: +54 (0) 11-4733-2200
Germany: +49 (0) 6251-133-1999

UK: +44 (0) 800-267666
France: +33 (0) 1-3420-8686
Netherlands: +31 (0) 73-6246-999
China: +86 (0) 400-820-6015

HDP-22 Crimp Snap-In Contact Connectors

Product Selection Guide

Connector				Contacts		
Type	**Insert Material**	**Shell Type Material and Finish**	**Mounting**	**Type**	**Termination**	**Plating**
Plug (pg. 105)	94V-0 Rated Thermoplastic, Black	Tin Plated Steel with Grounding Indents	**.120** [3.05] Dia. Holes	Pin (pg. 109)	Crimp	Duplex (.000030 [0.00076] Gold and Tin) Duplex (Gold Flash and Tin)
Receptacle (pg. 105)	94V-0 Rated Thermoplastic, Black	Tin Plated Steel	**.120** [3.05] Dia. Holes	Socket (pg. 109)	Crimp	Duplex (0.000030 [0.00076] Gold and Tin) Duplex (Gold Flash and Tin)

Catalog 82068
Revised 4-12

www.te.com

Dimensions are shown for reference purposes only. Specifications subject to change.

Dimensions are in inches and millimeters unless otherwise specified.
USA: +1 (800) 522-6752

Canada: +1 (905) 475-6222
Mexico/C. Am.: +52 (0) 55-1106-0800
Latin/S. Am.: +54 (0) 11-4733-2200
Germany: +49 (0) 6251-133-1999

UK: +44 (0) 800-267666
France: +33 (0) 1-3420-8686
Netherlands: +31 (0) 73-6246-999
China: +86 (0) 400-820-6015

HDP-22 Crimp Snap-In Contact Connectors (Continued)

Product Facts:

- **Approximately 65% higher density than HD-20 connectors**
- **Lower cost, commercial version of the military approved Series 90 family**
- **Available with shielding overmold hardware and shielding enclosure kits**
- **Capable of using numerous standard HD-20 cable clamps and mating hardware**
- **Low cost, high performance, precision-formed crimp contacts**
- **Intermateable with any size 22 Subminiature D connector dimensionally complying with MIL-C-24308**
- **Recognized under the Component Program of Underwriters Laboratories Inc., File No. E28476**
- **Listed under Underwriters Laboratories Inc., Standard 1863, Communication Circuit Accessories, File No. E81956**
- **Certified by Canadian Standards Association, File No. LR 1088108 (LR 7189-207)**

Section Contents

Plug and Receptacle Connectors 105
Basic Shielding Hardware Kits 106
Shielding Hardware Enclosure Kits 107
Ferrules for Shielding Hardware Kits 108
Contacts 109
Application Tooling 108, 109

Unshielded Cable Clamps	Shielded Cable Clamps and Shielding Hardware and Enclosure Kits	Mounting and Mating Hardware
One-Piece All Plastic Cable Clamp 180°/120° (Quik-Snap) (pg. 133)	Straight Exit RFI/EMI Shields for Jacketed Cable (pg. 141)	Male Screw Retainers (pgs. 146, 147)
Box and Lid Straight/90° Exit (pg. 137)	90° Exit RFI/EMI Die Cast Shields For Jacketed Cable (pg. 142)	Female Screwlocks (pg. 148)
Box and Lid Straight/90° Exit with Male Screw Retainers (pg. 137)	Basic Shielding Hardware Kits (pg. 106)	Locking Posts and Slide Latches (pgs. 149, 151)
Clam Shell Straight/45° Exit (pg. 138)	Shielding Hardware Enclosure Kits (pg. 107)	Two-Piece Spring Latch (pg. 152)
Clam Shell Straight/45° Exit with Screw Retainers (pg. 138)	Crimp & Split Ring Ferrules (pgs. 143-145)	Latching Blocks (pgs. 153, 154)

Contact Retention Features

Pin

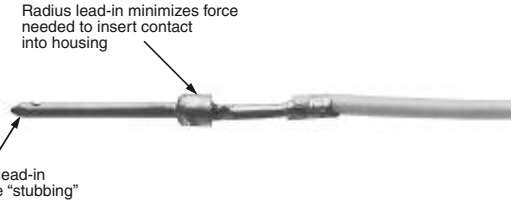

Socket

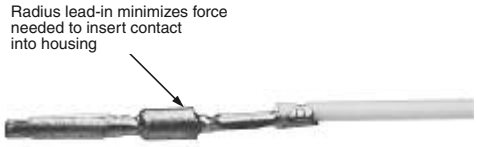

Housing (Cutaway)

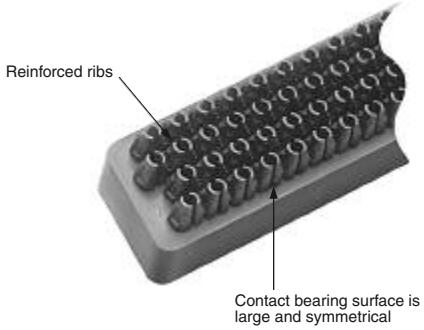

Catalog 82068
Revised 4-12

www.te.com

Dimensions are shown for reference purposes only. Specifications subject to change.

Dimensions are in inches and millimeters unless otherwise specified.
USA: +1 (800) 522-6752

Canada: +1 (905) 475-6222
Mexico/C. Am.: +52 (0) 55-1106-0800
Latin/S. Am.: +54 (0) 11-4733-2200
Germany: +49 (0) 6251-133-1999

UK: +44 (0) 800-267666
France: +33 (0) 1-3420-8686
Netherlands: +31 (0) 73-6246-999
China: +86 (0) 400-820-6015

HDP-22 Crimp Snap-In Contact Connectors (Continued)

Plug
(With Grounding Indents)

Receptacle

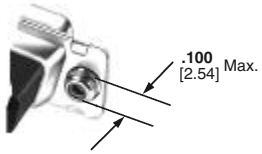

Clinch Nut
(Plug and Receptacle)

Material and Finish:

Shell—Steel, tin plated

Insert—94V-0 rated thermoplastic, black

Contacts and ferrules must be purchased separately.

Related Product Data:

Contact Arrangements—page 40
Performance Characteristics—page 41
Contacts—page 109
Ferrules—page 108
Mating/Panel Mounting—page 42
Cable Clamps—pages 132, 133, 135-137, 140, 141, 144, 145
Mating Hardware—pages 146-150, 153, 155

Technical Documents:

Application Specification—114-10001
Product Specification—108-1268
Instruction Sheets—408-9381
Note: Instruction Sheets for TE Tooling are packaged with the tooling. For additional information call the Tooling Assistance Center: **1-800-722-1111.**

Plug

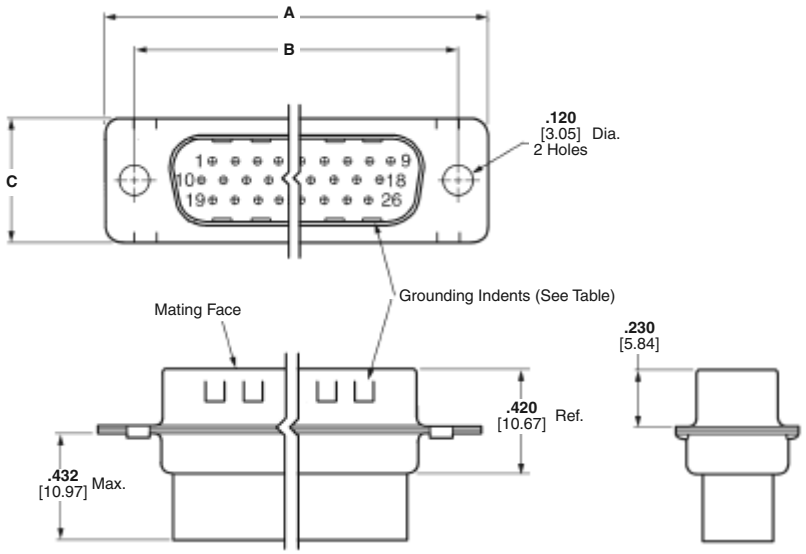

Receptacle

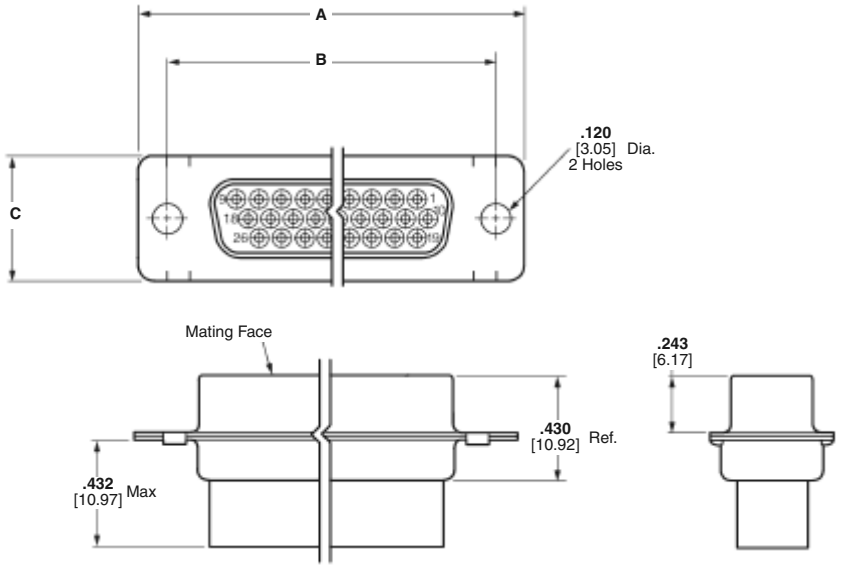

Shell Size	No. of Contact Positions	Dimensions			Part Numbers			
		A	B	C	With Grounding Indents	With Clinch Nuts		With Clinch Nuts
					Plug	Plug	Receptacle	Receptacle
1	15	**1.213** 30.81	**.984** 24.99	**.494** 12.55	748364-1	1658691-1	1658681-1	1658690-1
2	26	**1.541** 39.14	**1.312** 33.33	**.494** 12.55	1658671-1	5749717-1	1658682-1	5788816-1
3	44	**2.088** 53.84	**1.852** 47.04	**.494** 12.55	1658672-1	—	1658683-1	5786583-1
4	62	**2.729** 69.32	**2.500** 63.50	**.494** 12.55	1658673-1	6658293-1	1658684-1	—
5	78	**2.635** 66.93	**2.406** 61.11	**.605** 15.37	1658674-1	—	1658685-1	5788817-1

Note: Plugs accept size 22 DF pin contacts and receptacles accept size 22 DF socket contacts.

Note: All part numbers are RoHS compliant.

Catalog 82068
Revised 4-12

www.te.com

Dimensions are shown for reference purposes only. Specifications subject to change.

Dimensions are in inches and millimeters unless otherwise specified.
USA: +1 (800) 522-6752

Canada: +1 (905) 475-6222
Mexico/C. Am.: +52 (0) 55-1106-0800
Latin/S. Am.: +54 (0) 11-4733-2200
Germany: +49 (0) 6251-133-1999

UK: +44 (0) 800-267666
France: +33 (0) 1-3420-8686
Netherlands: +31 (0) 73-6246-999
China: +86 (0) 400-820-6015

HDP-22 Crimp Snap-In Contact Connectors (Continued)

Basic Shielding Hardware Kits

Plug

Receptacle

Each kit contains:

- Connector
- Inner shield
- Outer shield

Contacts and ferrules must be purchased separately.

Material and Finish:

Connector Shell—Steel, tin plated
Connector Insert—94V-0 rated thermoplastic, black
Shields—Steel, tin plated

Related Product Data:

Contact Arrangements—page 40
Performance Characteristics—page 41
Contacts—page 109
Ferrules—page 108
Application Tooling—pages 108 & 109
Mateable Connectors—pages 105 & 107
Mating Hardware—pages 146-150, 153, 155
Mating/Panel Mounting—page 42

Technical Documents:

Application Specifications—114-10001
Product Specification—108-1268
Instruction Sheet—408-9381, 408-9010

Note: Instruction Sheets for TE Tooling are packaged with the tooling. For additional information call the Tooling Assistance Center: **1-800-722-1111.**

Plug

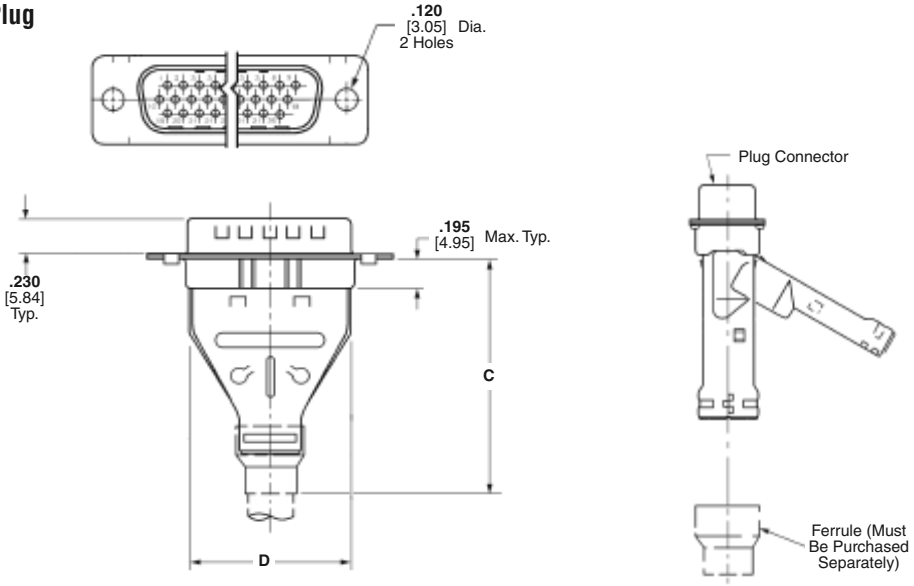

Receptacle

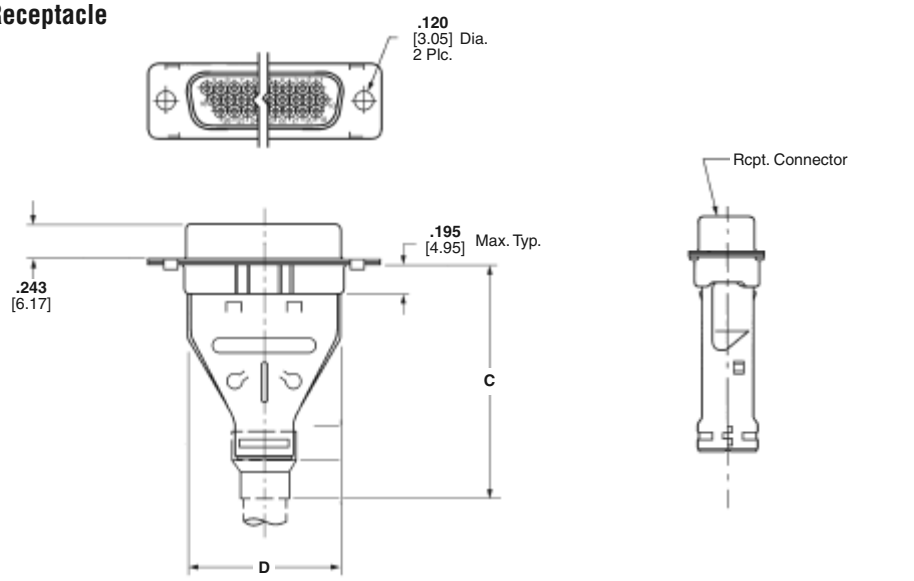

Shell Size	No. of Contact Positions	Dimensions C	Dimensions D	Recommended Cable Outer Dia. Range	Max. Inner Cable Bundle Dia.†	Kit Numbers Plug	Kit Numbers Receptacle
1	15	**1.535** 38.99	**.700** 17.78	**.165-.455** 4.19-11.56	**.350** 8.89	1658675-1	5748634-1
2	26	**1.535** 38.99	**1.024** 26.01	**.165-.455** 4.19-11.56	**.350** 8.89	1658676-1	1658687-1
3	44	**1.535** 38.99	**1.576** 40.03	**.165-.455** 4.19-11.56	**.350** 8.89	1658677-1	5748636-1
4	62	**1.892** 48.06	**2.215** 56.26	**.338-.562** 8.59-14.28	**.450** 11.43	5748471-1	—
5	78	**1.876** 47.65	**2.120** 53.85	**.338-.490** 8.59-12.45	**.450** 11.43	5748472-1	—

Notes: 1. Plugs accept size 22 DF pin contacts and receptacles accept size 22 DF socket contacts.
2. Components of the kits are shipped unassembled and bulk-packaged in quantities of 100 pieces.
†Maximum cable diameter after jacket and braid removed.

Note: All part numbers are RoHS compliant.

Catalog 82068
Revised 4-12

www.te.com

Dimensions are shown for reference purposes only. Specifications subject to change.

Dimensions are in inches and millimeters unless otherwise specified.
USA: +1 (800) 522-6752

Canada: +1 (905) 475-6222
Mexico/C. Am.: +52 (0) 55-1106-0800
Latin/S. Am.: +54 (0) 11-4733-2200
Germany: +49 (0) 6251-133-1999

UK: +44 (0) 800-267666
France: +33 (0) 1-3420-8686
Netherlands: +31 (0) 73-6246-999
China: +86 (0) 400-820-6015

HDP-22 Crimp Snap-In Contact Connectors (Continued)

Shielding Hardware Enclosure Kits

Plug

Receptacle

Each kit contains:

- Connector
- Inner shield
- Outer shield
- Enclosure
- Two jackscrews

Contacts and ferrules must be purchased separately.

Material and Finish:

Connector Shell—Steel, tin plated
Connector Insert—94V-0 rated thermoplastic, black
Shields—Steel, tin plated
Enclosure—PVC, black
Jackscrews—Zinc alloy

Related Product Data:

Contact Arrangements—page 40
Performance Characteristics—page 41
Contacts—page 109
Ferrules—page 108
Application Tooling—pages 108 & 109
Mateable Connectors—pages 105 & 106
Mating Hardware—pages 146-150, 153-155
Mating/Panel Mounting—page 42

Technical Documents:

Application Specifications—114-10001
Product Specification—108-1268
Instruction Sheet—408-9381
408-9172

Note: Instruction Sheets for TE Tooling are packaged with the tooling. For additional information call the Tooling Assistance Center: **1-800-722-1111.**

Plug

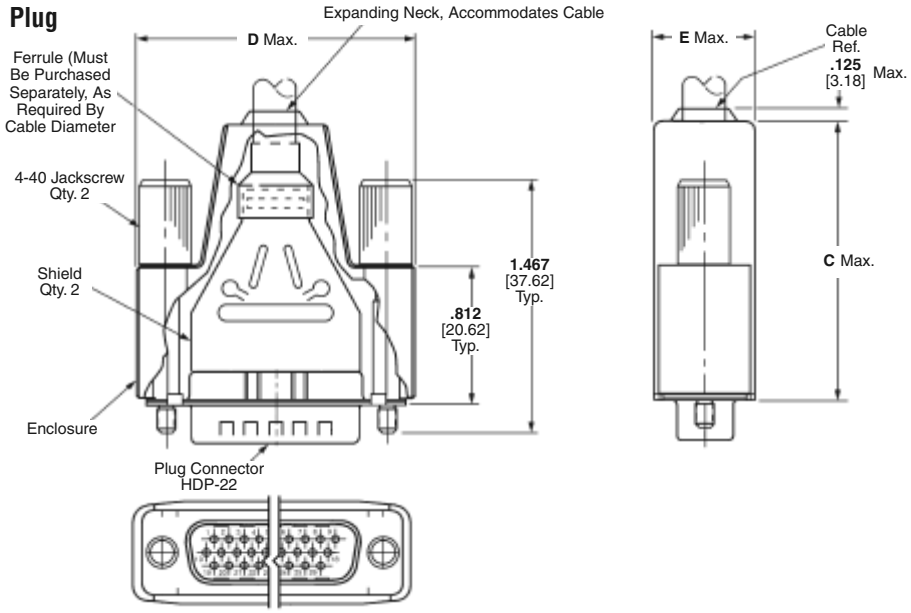

Receptacle

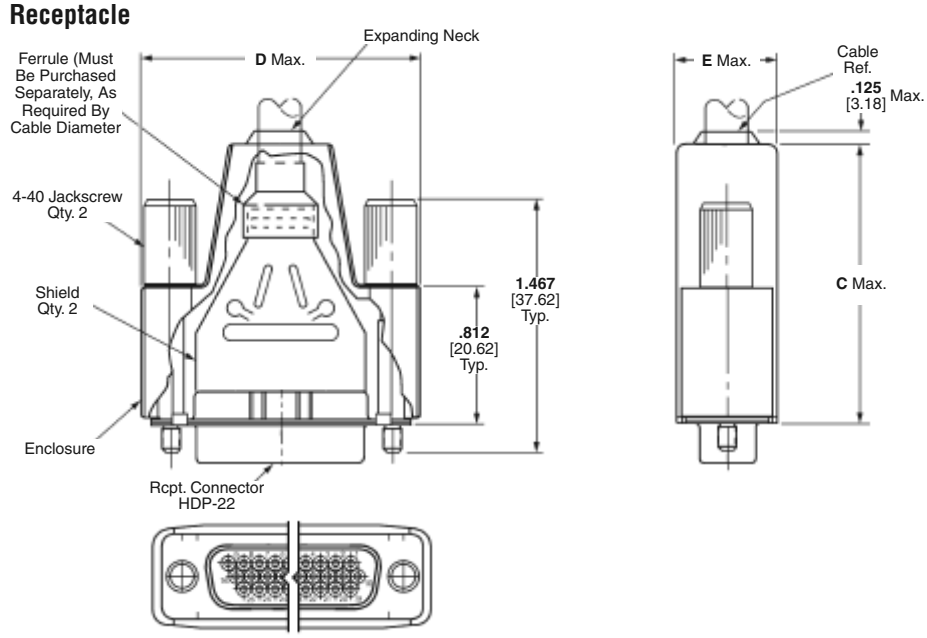

Shell Size	No. of Contact Positions	Dimensions C	D	E	Recommended Cable Outer Diameter	Max. Inner Cable Bundle Dia.†	Kit Numbers Plug	Receptacle	Shielding Enclosure Expansion Tool Cable O.D. (Max.)	Part Number
1	15	**1.640** 41.66	**1.355** 34.42	**.630** 16.00	**.190-.330** 4.83-8.38	**.330** 8.38	1658678-1	1658688-1	**.330** 8.38	58241-4
2	26	**1.640** 41.66	**1.685** 42.80	**.630** 16.00	**.190-.330** 4.83-8.38	**.330** 8.38	1658679-1	1658689-1		
3	44	**1.640** 41.66	**2.205** 56.01	**.630** 16.00	**.217-.435** 5.51-11.05	**.350** 8.89	1658680-1	5748641-1	**.450** 11.43	58241-1
4	62	**2.010** 51.05	**2.860** 72.64	**.730** 18.54	**.338-.562** 8.59-14.28	**.450** 11.43	5748476-1	5748642-1	**.572** 14.52	58241-2
5	78	**2.010** 51.05	**2.770** 70.36	**.730** 18.54	**.338-.490** 8.59-12.45	**.450** 11.43	5748477-1	—		

Notes: 1. Plugs accept size 22 DF pin contacts and receptacles accept size 22 DF socket contacts.
2. Components of the kits are shipped unassembled and bulk-packaged in quantities of 100 pieces.
†Maximum cable diameter after jacket and braid removed.

Note: All part numbers are RoHS compliant.

Catalog 82068
Revised 4-12

www.te.com

Dimensions are shown for reference purposes only. Specifications subject to change.

Dimensions are in inches and millimeters unless otherwise specified.
USA: +1 (800) 522-6752

Canada: +1 (905) 475-6222
Mexico/C. Am.: +52 (0) 55-1106-0800
Latin/S. Am.: +54 (0) 11-4733-2200
Germany: +49 (0) 6251-133-1999

UK: +44 (0) 800-267666
France: +33 (0) 1-3420-8686
Netherlands: +31 (0) 73-6246-999
China: +86 (0) 400-820-6015

HDP-22 Crimp Snap-In Contact Connectors (Continued)

Ferrules for Shielding Hardware Kits

Stepped

Straight

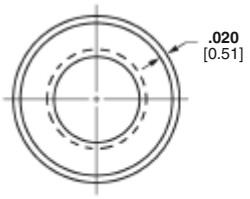

Shell Sizes	Style	L Dim.	Cable Diameter	Part Numbers	
				Ferrule	Die Sets*
1-3	Stepped	**.440** 11.18	**.165-.190** 4.19-4.83	3-747579-0	543424-3
1-3	Stepped	**.440** 11.18	**.190-.217** 4.83-5.51	3-747579-0	543424-2
1-3	Stepped	**.440** 11.18	**.217-.246** 5.51-6.25	3-747579-0	543424-8
1-3	Stepped	**.440** 11.18	**.246-.284** 6.25-7.21	3-747579-2	543424-1
1-3	Stepped	**.440** 11.18	**.284-.324** 7.21-8.23	3-747579-2	543424-7
1-3	Stepped	**.440** 11.18	**.324-.375** 8.23-9.53	3-747579-4	543424-6
1-3	Straight	**.440** 11.18	**.375-.437** 9.53-11.05	7-747579-7	543424-5
1-3	Straight	**.440** 11.18	**.400-.460** 10.16-11.56	3-747579-6	543424-4
4-5	Stepped	**.625** 15.88	**.230-.265** 5.84-6.73	2-747580-4	543425-2
4-5	Stepped	**.625** 15.88	**.338-.385** 8.59-9.78	2-747580-3	543425-1
4-5	Stepped	**.625** 15.88	**.375-432** 9.53-10.97	2-747580-1	58238-1
4-5	Stepped	**.625** 15.88	**.422-.490** 10.72-12.45	3-747580-1	58237-2
4	Straight	**.625** 15.88	**.480-.562** 12.19-14.28	2-747580-2	58237-1

*Die sets used with Hand Crimping Tool Part No. 543344-1 or Pneumatic Bench Tool Part No. 312522-3 equipped with Die Set Holder Part No. 58449-1.

Material and Finish:

Steel (annealed), tin plated

Related Product Data:

Shielding Hardware and Enclosure Kits—pages 106 & 107

Technical Documents:

Instruction Sheets—
408-9507
408-9508
408-9243
408-9242

Note: Instruction Sheets for TE Tooling are packaged with the tooling. For additional information call the Tooling Assistance Center: **1-800-722-1111.**

Application Tooling for Shielding Hardware Kits

Hand Crimping Tool No. 543344-1 (Requires Die Sets, see table above.)

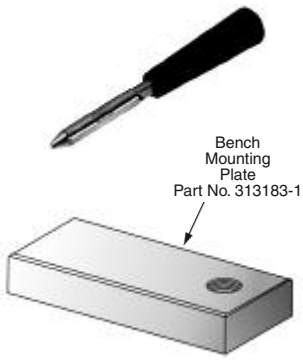

Shielding Enclosure Expansion Tools
Part No. 58241-1 (.450 [11.43])†
58241-2 (.572 [14.53])†
58241-4 (.330 [8.38])†
†Maximum Cable Diameter
(Instruction Sheet—408-9507)

Pneumatic Bench Tool No. 312522-3 (Requires Die Set Holder No. 58449-1.)

Note: All part numbers are RoHS compliant.

Catalog 82068
Revised 4-12

www.te.com

Dimensions are shown for reference purposes only. Specifications subject to change.

Dimensions are in inches and millimeters unless otherwise specified.
USA: +1 (800) 522-6752

Canada: +1 (905) 475-6222
Mexico/C. Am.: +52 (0) 55-1106-0800
Latin/S. Am.: +54 (0) 11-4733-2200
Germany: +49 (0) 6251-133-1999

UK: +44 (0) 800-267666
France: +33 (0) 1-3420-8686
Netherlands: +31 (0) 73-6246-999
China: +86 (0) 400-820-6015

HDP-22 Crimp Snap-In Contact Connectors (Continued)

Material

Pin—Brass

Socket—Phosphor bronze

Finish

A—Duplex plated .000030 [0.00076] gold on mating end, tin on crimp barrel, with entire contact nickel underplated

B—Duplex plated gold flash on mating end, tin on crimp barrel, entire contact nickel underplated

Related Product Data:

Performance Characteristics—page 41

Connectors used with—pages 105-107

Technical Documents:

Application Specification—114-10001

Product Specification—108-1268

Instruction Sheet—408-9381

Note: Instruction Sheets for TE Tooling are packaged with the tooling. For additional information call the Tooling Assistance Center: **1-800-722-1111.**

Precision Formed Crimp Snap-In Contacts, Size 22 DF

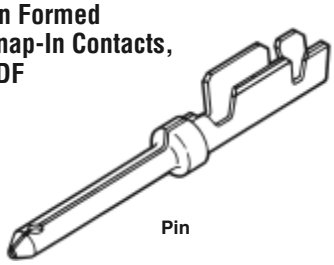

Pin

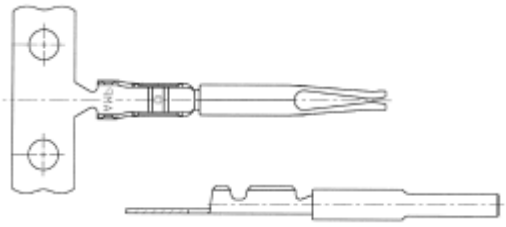

Socket

Wire Size AWG mm²	Insulation Diameter Max.	Contact Finish (Plating Code)	Contact Part Numbers				Hand Tools for Loose Form Contacts	
			Pin		Socket			
			Strip Form	Loose Form	Strip Form	Loose Form	PRO-CRIMPER II Hand Tool	CERTI-CRIMP II Hand Tool
28-22 0.4-0.08	.040 1.02	A	1658670-1	1658670-2	1658686-1	1658686-2	90800-1	91520-1
		B	1658670-3	1658670-4	1658686-3	1658686-4		

Notes: 1. Strip form contacts shipped 20,000 pieces/reel.

Insertion/Extraction Tool No. 91285-1 (Instruction Sheet—408-9404)

This tool contains interchangeable tips to Insert/Extract
Size 22, 28-22 AWG [0.08-0.4 mm²] Crimp Contacts
Size 20, 28-20 AWG [0.08-0.4 mm²] Crimp Contacts
Size 20, Posted Contacts

Application Tooling

Applicators

To accommodate the broad range of wire termination products that TE produces, most TE terminating machines are designed for use with interchangeable applicators. The basic styles are quickly interchangeable to minimize costly down times, and feature dial-in wire and insulation crimp-height settings. Special applicators are now available for use with the AMP Crimp Quality Monitor, for measuring the crimp height of each termination as it is made, plus evaluating the quality of each crimp.

For further information, request Catalog 65404.

For applicator part numbers, call the TE Tooling Assistance Center at **1-800-722-1111.**

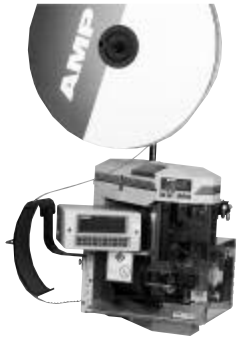

AMP-O-LECTRIC MODEL "G" Terminating Machine

A totally new design of our most popular machine for bench-top operation. It features a quiet and highly-reliable direct motor drive, electronic controls for ease of setup and operation, and improved guarding and lighting for operator convenience and safety. All versions also include either manual or automatic precision adjustment for crimp height. Power requirement is 120 or 220 VAC, 50 or 60 Hz.

For further information, request Catalog 65828.

AMP-O-MATIC Model II Stripper-Crimper Machine

This machine automatically strips as well as terminates individual wires. Similar to the AMP-O-LECTRIC Model "G" machine, applicators are quickly interchangeable, and it includes precision adjustment for crimp height. All adjustments can be made from the front of the machine without special tools. Power requirement is 120 VAC. Air requirement is 80-100 psi [5.52-6.89 bar], 3.5 scfm [0.00165 m³/s].

For further information request Catalog 65004.

PRO-CRIMPER II Hand Tool Part No. 90800-1

Features interchangeable die sets and ratchet control that provides full die closure to help eliminate partial crimps. The new design is more durable, and requires dramatically less hand force.

For further information, request Catalog 82276.

Note: All part numbers are RoHS compliant.

Catalog 82068
Revised 4-12

www.te.com

Dimensions are shown for reference purposes only. Specifications subject to change.

Dimensions are in inches and millimeters unless otherwise specified.
USA: +1 (800) 522-6752

Canada: +1 (905) 475-6222
Mexico/C. Am.: +52 (0) 55-1106-0800
Latin/S. Am.: +54 (0) 11-4733-2200
Germany: +49 (0) 6251-133-1999

UK: +44 (0) 800-267666
France: +33 (0) 1-3420-8686
Netherlands: +31 (0) 73-6246-999
China: +86 (0) 400-820-6015

HDE-20 IDC Connectors for Discrete Wire and Jacketed Cable

Product Selection Guide

Connector				Contacts Pre-Loaded*		
Type	**Insert Material**	**Shell Type Material and Finish**	**Mounting**	**Type**	**Termination**	**Plating**
Plug						
All-Plastic (pg. 112) Metal-Shell (pg. 114)	94V-0 Rated Thermoplastic, Black	Tin Plated Steel	**.120** [3.05] Dia. Holes	Pins	Insulation Displacement * Interchangeable crimp snap-in contacts available, see page 121	Duplex (.000030 [0.00076] Gold and Tin) Duplex (Gold Flash and Tin)
Receptacle						
All-Plastic (pg. 113) Metal-Shell (pg. 115)	94V-0 Rated Thermoplastic, Black	Tin Plated Steel	**.120** [3.05] Dia. Holes	Sockets	Insulation Displacement * Interchangeable crimp snap-in contacts available, see page 121	Duplex (.000030 [0.00076] Gold and Tin) Duplex (Gold Flash and Tin)

Catalog 82068
Revised 4-12

www.te.com

Dimensions are shown for reference purposes only. Specifications subject to change.

Dimensions are in inches and millimeters unless otherwise specified.
USA: +1 (800) 522-6752

Canada: +1 (905) 475-6222
Mexico/C. Am.: +52 (0) 55-1106-0800
Latin/S. Am.: +54 (0) 11-4733-2200
Germany: +49 (0) 6251-133-1999

UK: +44 (0) 800-267666
France: +33 (0) 1-3420-8686
Netherlands: +31 (0) 73-6246-999
China: +86 (0) 400-820-6015

HDE-20 IDC Connectors for Discrete Wire and Jacketed Cable (Continued)

Product Facts

- **Insulation displacement contacts preloaded in housings**
- **No wire stripping**
- **Post plated contacts with no bare edges**
- **Duplex plated contacts—gold on mating end and tin on crimp end**
- **Patented contact ensures reliable termination of a wide range of wire sizes and insulation diameters**
- **Removable contacts for replacement and repair**
- **Selective loading of contacts available**
- **Crimp snap-in contacts available for making jumpers between circuits**
- **Recognized under the Component Program of Underwriters Laboratories Inc., File No. E28476**
- **Listed under Underwriters Laboratories Inc., Standard 1863, Communication Circuit Accessories, File No. E81956**
- **Certified by Canadian Standards Association, File No. 1088108 (LR 7189-207)**

Typical Application Rates

Tool	Rate
Pistol Style	7.4 Sec./Line
Arbor Tool	5.0 Sec./Line
CHAMPOMATOR Machine	2.8 Sec./Line

Note: Rates are based on total time to complete a double ended 25 position Jacketed Cable Assembly

Section Contents

All-Plastic Plug and Receptacle Connectors 112, 113
Metal-Shell Plug and Receptacle Connectors 114, 115
Basic Shielding Hardware Kits 116, 117
Shielding Hardware Enclosure Kits 118, 119
Ferrules for Shielding Hardware Kits 120
Interchangeable Contacts, Crimp Snap-In 121
Application Tooling 122, 123

Unshielded Cable Clamps	Shielded Cable Clamps and Shielding Hardware and Enclosure Kits	Mounting and Mating Hardware
One-Piece, All-Plastic Cable Clamp, 180°/120° Exit (Quik-Snap) (pg. 133) Unshielded Cable Clamps Straight/90° Exit (pg. 132) Slide-On Back Cover (pg. 136)	Straight Exit RFI/EMI Shields for Jacketed Cable (pg. 142) 90° Exit Die Cast RFI/EMI Shields for Jacketed Cable (pg. 142) Basic Shielding Hardware Kits (pgs. 116, 117) Shielding Hardware Enclosure Kits (pgs. 118, 119)	Male Screw Retainers (pgs. 146, 147) Female Screwlocks (pg. 148) Locking Posts and Slide Latches (pgs. 149, 151) Spring Latches, (pg. 152) Latching Blocks, (pgs. 153, 154) Keying Plug (pg. 155)

Catalog 82068
Revised 4-12

www.te.com

Dimensions are shown for reference purposes only. Specifications subject to change.

Dimensions are in inches and millimeters unless otherwise specified.
USA: +1 (800) 522-6752

Canada: +1 (905) 475-6222
Mexico/C. Am.: +52 (0) 55-1106-0800
Latin/S. Am.: +54 (0) 11-4733-2200
Germany: +49 (0) 6251-133-1999

UK: +44 (0) 800-267666
France: +33 (0) 1-3420-8686
Netherlands: +31 (0) 73-6246-999
China: +86 (0) 400-820-6015

HDE-20 All-Plastic IDC Connectors

Plug

Material and Finish:

Housing—94V-0 rated thermoplastic, black

Contacts—Phosphor bronze

Contact Finish—Duplex plated:
A—.000030 [0.00076] gold on mating end, tin on termination end, with entire contact nickel underplated
B—Gold flash on mating end, tin on termination end, with entire contact nickel underplated

Related Product Data:

Contact Arrangements—page 40
Performance Characteristics—page 41
Interchangeable Crimp Snap-In Contacts—page 121
Application Tooling—pages 121-123
Mateable Connectors:
HDP—pages 90-97
HD-20 Board Mount—pages 54-71, 78-85, 87-89
Mating/Panel Mounting—page 42
Cable Clamps—pages 132, 133, 135-137, 139, 140, 144, 145
Mating Hardware—pages 146-150, 153, 155

Technical Documents:

Product Specification—108-40011
Application Specifications—114-40002
114-40003
Instruction Sheet—408-6621
Note: Instruction Sheets for TE Tooling are packaged with the tooling. For additional information call the Tooling Assistance Center: **1-800-722-1111.**

Plug

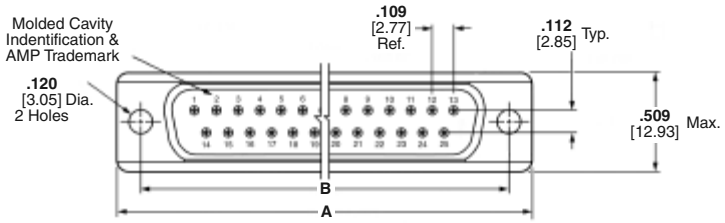

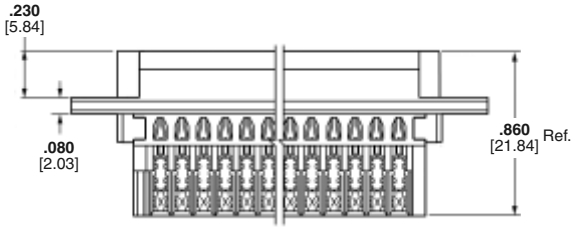

Shell Size	No. of Contact Positions	Dimensions A	Dimensions B	Contact Finish (Plating Code)	Connector Part Numbers: Contact Identification No. 1 for 30-26 AWG [0.05-0.15mm²] Wire Plug	Connector Part Numbers: Contact Identification No. 2 for 26-22 AWG [0.15-0.4mm²] Wire Plug
1	9	**1.213** 30.81	**.984** 24.99	A	—	745203-2
				B	—	1-745203-1
2	15	**1.541** 39.14	**1.312** 33.33	A	—	745207-7
				B	—	—
3	25	**2.090** 53.09	**1.852** 47.04	A	745211-9	745211-7
				B	—	745211-8
4	37	**2.732** 69.39	**2.500** 63.50	A	—	745215-7
				B	—	—

Notes: 1. All connectors are preloaded with insulation displacement contacts. Pins in plug connectors and sockets in receptacle connectors. Contacts accept a max. wire insulation thickness of .015 [0.38] and a max. wire insulation dia. of .060 [1.52].
2. HDE connectors are designed for terminating solid or stranded (7-strand max.) wire.
3. Individual conductor strands should be larger than .005 inch [0.127] diameter.
4. Extraction Tool Part No. 91232-1 (Instruction Sheet 408-6631) is used to remove pin or socket contacts.
5. For terminating more than one wire, or a drain wire, use crimp contacts on page 121.

Note: All part numbers are RoHS compliant.

Catalog 82068
Revised 4-12

www.te.com

Dimensions are shown for reference purposes only. Specifications subject to change.

Dimensions are in inches and millimeters unless otherwise specified.
USA: +1 (800) 522-6752

Canada: +1 (905) 475-6222
Mexico/C. Am.: +52 (0) 55-1106-0800
Latin/S. Am.: +54 (0) 11-4733-2200
Germany: +49 (0) 6251-133-1999

UK: +44 (0) 800-267666
France: +33 (0) 1-3420-8686
Netherlands: +31 (0) 73-6246-999
China: +86 (0) 400-820-6015

HDE-20 All-Plastic IDC Connectors (Continued)

Receptacle

Receptacle

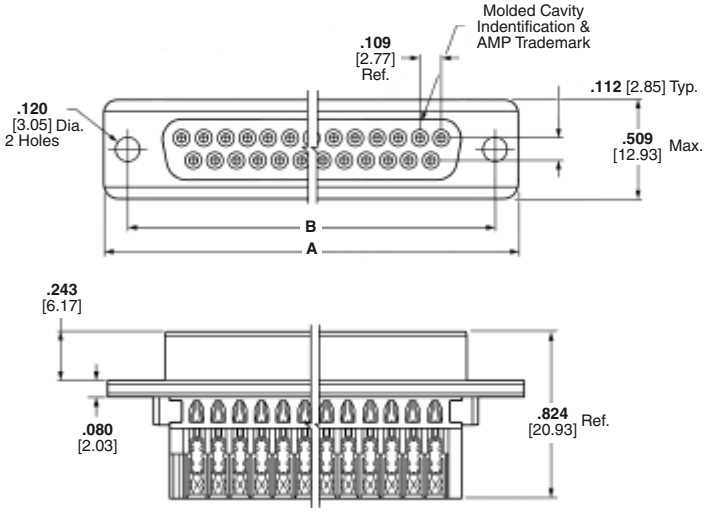

Material and Finish:

Housing—94V-0 rated thermoplastic, black

Contacts—Phosphor bronze

Contact Finish—Duplex plated:
A—.000030 [0.00076] gold on mating end, tin on termination end, with entire contact nickel underplated
B—Gold flash on mating end, tin on termination end, with entire contact nickel underplated

Related Product Data:

Contact Arrangements—page 40
Performance Characteristics—page 41
Interchangeable Crimp Snap-In Contacts—page 121
Application Tooling—pages 121-123
Mateable Connectors:
HDP—pages 90-97
HD-20 Board Mount—pages 54-71, 78-85, 87-89
Mating/Panel Mounting—page 42
Cable Clamps—pages 132, 133, 135-137, 139, 140, 144, 145
Mating Hardware—pages 146-150, 153, 155

Technical Documents:

Product Specification—108-40011
Application Specifications—114-40002
114-40003
Instruction Sheet—408-6621
Note: Instruction Sheets for TE Tooling are packaged with the tooling. For additional information call the Tooling Assistance Center: **1-800-722-1111.**

Shell Size	No. of Contact Positions	Dimensions A	Dimensions B	Contact Finish (Plating Code)	Connector Part Numbers: Contact Identification No. 2 for 26-22 AWG [0.15-0.4mm²] Wire — Receptacle
1	9	**1.213** 30.81	**.984** 24.99	A	745201-7
				B	745201-9
2	15	**1.541** 39.14	**1.312** 33.33	A	745205-7
3	25	**2.090** 53.09	**1.852** 47.04	A	745209-7
				B	745209-8

Notes: 1. All connectors are preloaded with insulation displacement contacts. Pins in plug connectors and sockets in receptacle connectors. Contacts accept a max. wire insulation thickness of .015 [0.38] and a max. wire insulation dia. of .060 [1.52].
2. HDE connectors are designed for terminating solid or stranded (7-strand max.) wire.
3. Individual conductor strands should be larger than .005 inch [0.127] diameter.
4. Extraction Tool Part No. 91232-1 (Instruction Sheet 408-6631) is used to remove pin or socket contacts.
5. For terminating more than one wire, or a drain wire, use crimp contacts on page 121.

Note: All part numbers are RoHS compliant.

Catalog 82068
Revised 4-12

www.te.com

Dimensions are shown for reference purposes only. Specifications subject to change.

Dimensions are in inches and millimeters unless otherwise specified.
USA: +1 (800) 522-6752

Canada: +1 (905) 475-6222
Mexico/C. Am.: +52 (0) 55-1106-0800
Latin/S. Am.: +54 (0) 11-4733-2200
Germany: +49 (0) 6251-133-1999

UK: +44 (0) 800-267666
France: +33 (0) 1-3420-8686
Netherlands: +31 (0) 73-6246-999
China: +86 (0) 400-820-6015

HDE-20 Metal-Shell IDC Connectors

Plug

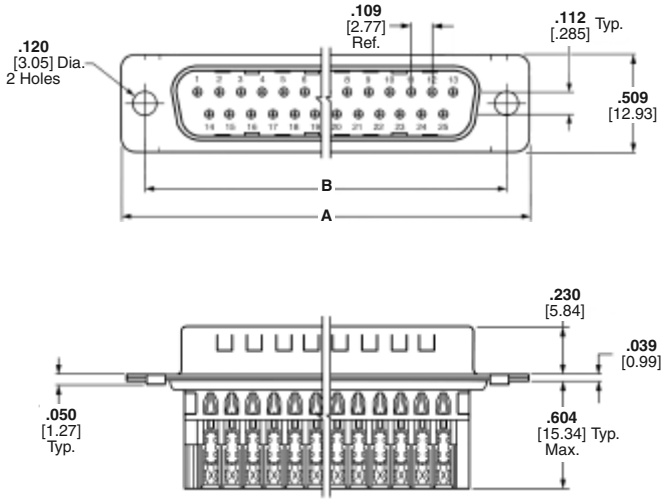

Material and Finish:

Shell—Steel, tin plated

Insert—94V-0 rated thermoplastic, black

Contacts—Phosphor bronze

Contact Finish—Duplex plated:
A—.000030 [0.00076] gold on mating end, tin on termination end, with entire contact nickel underplated
B—Gold flash on mating end, tin on termination end, with entire contact nickel underplated

Related Product Data:

Contact Arrangements—page 40

Performance Characteristics—page 41

Interchangeable Crimp Snap-In Contacts—page 121

Application Tooling—pages 121-123

Mateable Connectors:
HDP—pages 90-97
HD-20 Board Mount—pages 54-71, 78-85, 87-89

Mating/Panel Mounting—page 42

Cable Clamps—pages 132, 133, 135-137, 138, 140, 144, 145

Mating Hardware—pages 146-150, 153, 155

Technical Documents:

Product Specification—108-40011

Application Specifications—
114-40002
114-40003

Instruction Sheet—408-6645

Note: Instruction Sheets for TE Tooling are packaged with the tooling. For additional information call the Tooling Assistance Center: **1-800-722-1111.**

Shell Size	No. of Contact Positions	Dimensions A	Dimensions B	Contact Finish (Plating Code)	Connector Part Numbers: Contact Identification No. 1 for 30-26 AWG [0.05-0.15mm²] Wire	Contact Identification No. 2 for 26-22 AWG [0.15-0.4mm²] Wire	Contact Identification No. 3 for 22-20 AWG [0.4-0.6mm²] Wire
					Plug	Plug	Plug
1	9	**1.213** 30.81	**.984** 24.99	A	1-745492-7	1-745492-8	1-745492-9
				B	—	2-745492-0	—
2	15	**1.541** 39.14	**1.312** 33.33	A	1-745494-7	1-745494-5	—
				B	—	1-745494-6	—
3	25	**2.088** 53.04	**1.852** 47.04	A	1-745496-9	1-745496-7	2-745496-0
				B	—	1-745496-8	—
4	37	**2.729** 69.32	**2.500** 63.50	A	1-745498-6	1-745498-5	—
				B	—	1-745498-7	—

Notes: 1. All connectors are preloaded with insulation displacement contacts. Pins in plug connectors and sockets in receptacle connectors. Contacts accept a max. wire insulation thickness of .015 [0.38] and a max. wire insulation dia. of .060 [1.52].
2. Connectors can be made available with clinch nuts, contact TE.
3. HDE connectors are designed for terminating solid or stranded (7-strand max.) wire.
4. Individual conductor strands should be larger than .005 inch [0.127] diameter.
5. Extraction Tool Part No. 91232-1 (Instruction Sheet 408-6631) is used to remove pin or socket contacts.
6. For terminating more than one wire, or a drain wire, use crimp contacts on page 121.

Note: All part numbers are RoHS compliant.

Catalog 82068
Revised 4-12

www.te.com

Dimensions are shown for reference purposes only. Specifications subject to change.

Dimensions are in inches and millimeters unless otherwise specified.
USA: +1 (800) 522-6752

Canada: +1 (905) 475-6222
Mexico/C. Am.: +52 (0) 55-1106-0800
Latin/S. Am.: +54 (0) 11-4733-2200
Germany: +49 (0) 6251-133-1999

UK: +44 (0) 800-267666
France: +33 (0) 1-3420-8686
Netherlands: +31 (0) 73-6246-999
China: +86 (0) 400-820-6015

HDE-20 Metal-Shell IDC Connectors (Continued)

Receptacle

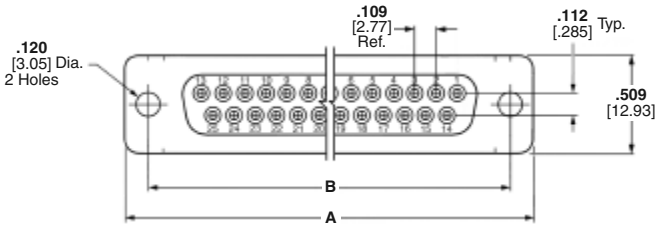

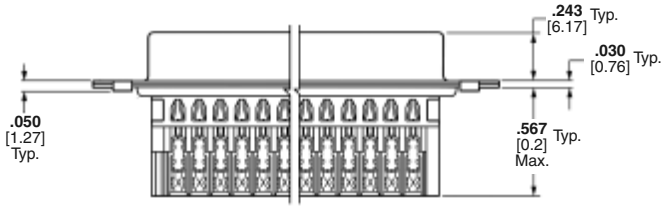

Material and Finish:

Shell—Steel, tin plated

Insert—94V-0 rated thermoplastic, black

Contacts—Phosphor bronze

Contact Finish—Duplex plated:
A—.000030 [0.00076] gold on mating end, tin on termination end, with entire contact nickel underplated
B—Gold flash on mating end, tin on termination end, with entire contact nickel underplated

Related Product Data:

Contact Arrangements—page 40
Performance Characteristics—page 41
Interchangeable Crimp Snap-In Contacts—page 121
Application Tooling—pages 121-123
Mateable Connectors:
HDP—pages 90-97
HD-20 Board Mount—pages 54-71, 78-85, 87-89
Mating/Panel Mounting—page 42
Cable Clamps—pages 132, 133, 135-137, 139, 140, 144, 145
Mating Hardware—pages 146-150, 153, 155

Technical Documents:

Product Specification—108-40011
Application Specifications—114-40002
114-40003
Instruction Sheet—408-6645
Note: Instruction Sheets for TE Tooling are packaged with the tooling. For additional information call the Tooling Assistance Center: **1-800-722-1111.**

Shell Size	No. of Contact Positions	Dimensions A	Dimensions B	Contact Finish (Plating Code)	Connector Part Numbers: Contact Identification No. 1 for 30-26 AWG [0.05-0.15mm²] Wire — Receptacle	Contact Identification No. 2 for 26-22 AWG [0.15-0.4mm²] Wire — Receptacle	Contact Identification No. 3 for 22-20 AWG [0.4-0.6mm²] Wire — Receptacle
1	9	**1.213** 30.81	**.984** 24.99	A	1-745491-6	1-745491-7	1-745491-9
				B	—	1-745491-8	—
2	15	**1.541** 39.14	**1.312** 33.33	A	1-745493-6	1-745493-4	—
				B	—	1-745493-5	—
3*	25	**2.088** 53.04	**1.852** 47.04	A	1-745495-7	1-745495-8	1-745495-9
				B	—	2-745495-0	—
4	37	**2.729** 69.32	**2.500** 63.50	A	1-745497-6	1-745497-5	—
				B	—	1-745497-7	—

*** RS-232, size 3 connector, for 26-22 [0.15-0.4mm²] AWG wire select loaded circuits 1-8,15,17, 20 and 22, Plug Part No. 747740-1, Receptacle Part No. 747741-1, gold flash contacts.**

Notes: 1. All connectors are preloaded with insulation displacement contacts. Pins in plug connectors and sockets in receptacle connectors. Contacts accept a max. wire insulation thickness of .015 [0.38] and a max. wire insulation dia. of .060 [1.52].
2. Connectors can be made available with clinch nuts, contact TE.
3. HDE connectors are designed for terminating solid or stranded (7-strand max.) wire.
4. Individual conductor strands should be larger than .005 inch [0.127] diameter.
5. Extraction Tool Part No. 91232-1 (Instruction Sheet 408-6631) is used to remove pin or socket contacts.
6. For terminating more than one wire, or a drain wire, use crimp contacts on page 121.

Note: All part numbers are RoHS compliant.

Catalog 82068
Revised 4-12

www.te.com

Dimensions are shown for reference purposes only. Specifications subject to change.

Dimensions are in inches and millimeters unless otherwise specified.
USA: +1 (800) 522-6752

Canada: +1 (905) 475-6222
Mexico/C. Am.: +52 (0) 55-1106-0800
Latin/S. Am.: +54 (0) 11-4733-2200
Germany: +49 (0) 6251-133-1999

UK: +44 (0) 800-267666
France: +33 (0) 1-3420-8686
Netherlands: +31 (0) 73-6246-999
China: +86 (0) 400-820-6015

HDE-20 Basic Shielding Hardware Kits

Each kit contains:

- Connector
- Inner shield
- Outer shield

Ferrules must be purchased separately.

Material and Finish:

Connector Shell—Steel, tin plated
Connector Insert—94V-0 rated thermoplastic, black
Shield—Steel, tin plated
Contacts—Phosphor bronze
Contact Finish—Duplex plated:
A—.000030 [0.00076] gold on mating end, tin on termination end, with entire contact nickel underplated
B—Gold flash on mating end, tin on termination end, with entire contact nickel underplated

Related Product Data:

Contact Arrangements—page 40
Performance Characteristics—page 41
Application Tooling—pages 121-123
Mateable Connectors:
HDP—pages 90-97
HD-20 Board Mount—pages 54-71, 78-85, 87-89
Mating Hardware—pages 146-150, 153, 155
Mating/Panel Mounting—page 42

Plug

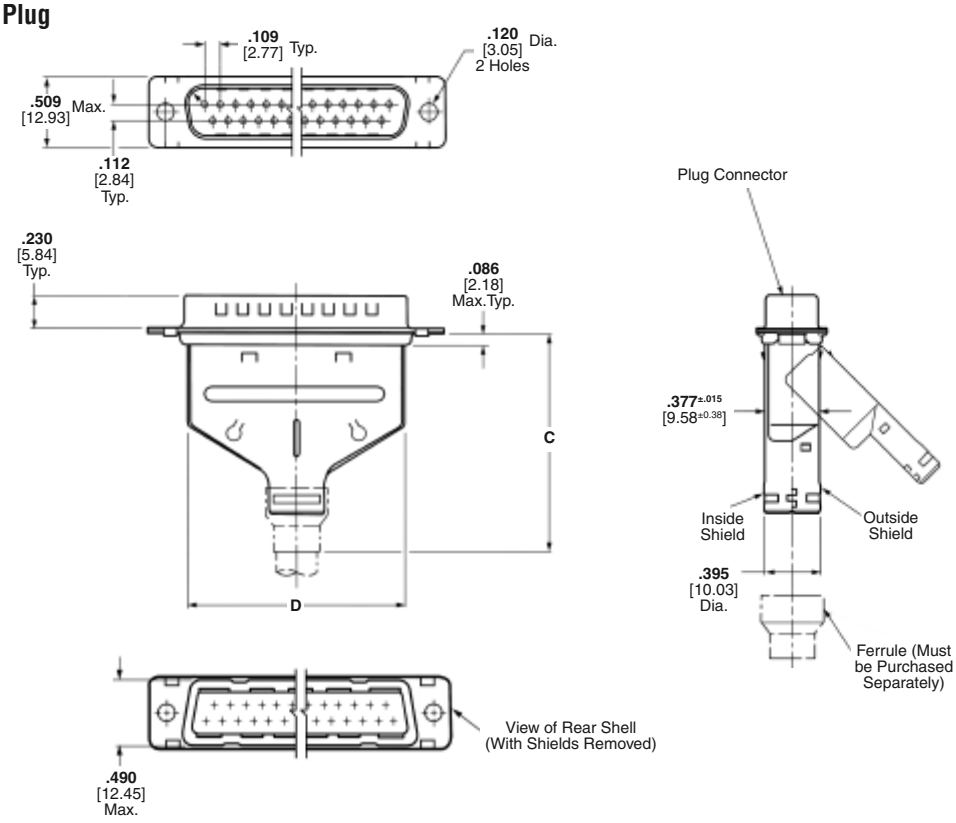

Technical Documents:

Product Specifications—
108-40011
108-40030

Application Specifications—
114-40002
114-40003
114-40006

Instruction Sheet—408-9010

Note: Instruction Sheets for TE Tooling are packaged with the tooling. For additional information call the Tooling Assistance Center: **1-800-722-1111.**

Shell Size	No. of Contact Pos.	Dimensions C	Dimensions D	Recommended Cable Outer Dia. Range	Max. Inner Cable Bundle Dia.†	Contact Finish (Plating Code)	Connector Part Numbers: Contact I.D. No. 1 for 30-26 AWG [0.05-0.15mm²] Wire — Plug	Contact I.D. No. 2 for 26-22 AWG [0.15-0.4mm²] Wire — Plug	Contact I.D. No. 3 for 22-20 AWG [0.4-0.6mm²] Wire — Plug
1	9	**1.520** 38.61	**.678** 17.22	**.165-.455** 4.19-11.56	**.350** 8.89	A	—	747515-7	—
2	15	**1.520** 38.61	**1.002** 25.45	**.165-.455** 4.19-11.56	**.350** 8.89	A	747531-7	747531-8	—
						B	—	747531-9	—
3	25	**1.520** 38.61	**1.550** 39.37	**.165-.455** 4.19-11.56	**.350** 8.89	A	747547-8	747547-9	—
						B	—	1-747547-0	—
4	37	**1.867** 47.42	**2.205** 56.01	**.338-.562** 8.59-14.28	**.450** 11.43	A	—	—	—
						B	—	1-747563-0	—

Note: Components of the kits are shipped unassembled and bulk-packaged in quantities of 100 pieces.
†Maximum cable diameter after jacket and braid removed.

Note: All part numbers are RoHS compliant.

Catalog 82068
Revised 4-12

www.te.com

Dimensions are shown for reference purposes only. Specifications subject to change.

Dimensions are in inches and millimeters unless otherwise specified.
USA: +1 (800) 522-6752

Canada: +1 (905) 475-6222
Mexico/C. Am.: +52 (0) 55-1106-0800
Latin/S. Am.: +54 (0) 11-4733-2200
Germany: +49 (0) 6251-133-1999

UK: +44 (0) 800-267666
France: +33 (0) 1-3420-8686
Netherlands: +31 (0) 73-6246-999
China: +86 (0) 400-820-6015

HDE-20 Basic Shielding Hardware Kits (Continued)

Each kit contains:

- Connector
- Inner shield
- Outer shield

Ferrules must be purchased separately.

Material and Finish:

Connector Shell—Steel, tin plated
Connector Insert—94V-0 rated thermoplastic, black
Shield—Steel, tin plated
Contacts—Phosphor bronze
Contact Finish—Duplex plated:
A—.000030 [0.00076] gold on mating end, tin on termination end, with entire contact nickel underplated
B—Gold flash on mating end, tin on termination end, with entire contact nickel underplated

Related Product Data:

Contact Arrangements—page 40
Performance Characteristics—page 41
Application Tooling—pages 121-123
Mateable Connectors:
HDP—pages 90-97
HD-20 Board Mount—pages 54-71, 78-85, 87-89
Mating Hardware—pages 146-150, 153, 155
Mating/Panel Mounting—page 42

Receptacle

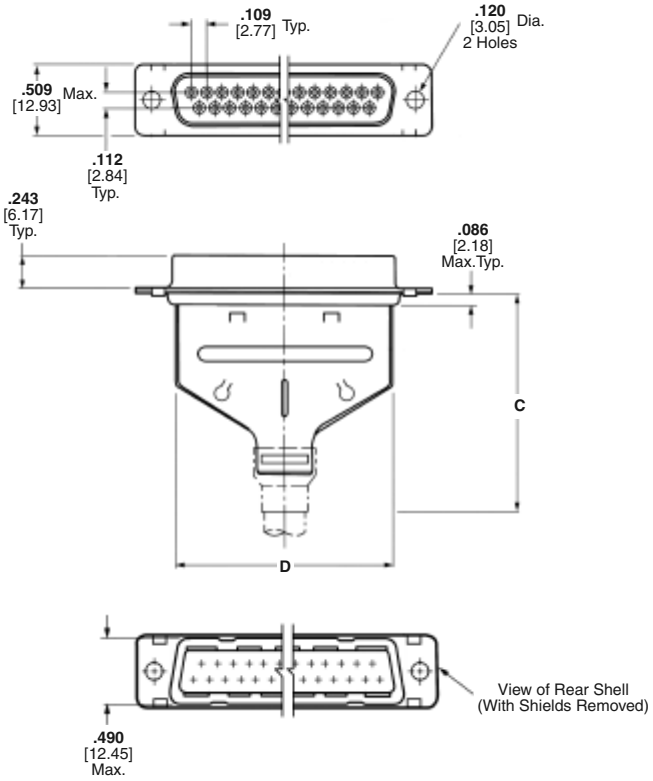

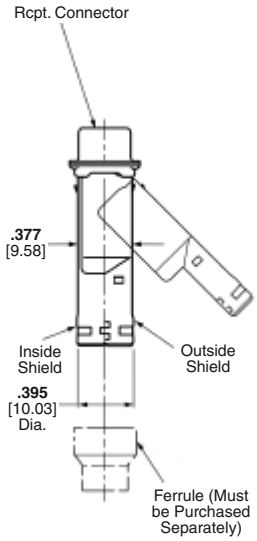

Technical Documents:

Product Specifications—
108-40011
108-40030

Application Specifications—
114-40002
114-40003
114-40006

Instruction Sheet—408-9010

Note: Instruction Sheets for TE Tooling are packaged with the tooling. For additional information call the Tooling Assistance Center: **1-800-722-1111.**

Shell Size	No. of Contact Pos.	Dimensions C	Dimensions D	Recommended Cable Outer Dia. Range	Max. Inner Cable Bundle Dia.†	Contact Finish (Plating Code)	Connector Part Numbers: Contact I.D. No. 1 for 30-26 AWG [0.05-0.15mm²] Wire — Receptacle	Contact I.D. No. 2 for 26-22 AWG [0.15-0.4mm²] Wire — Receptacle	Contact I.D. No. 3 for 22-20 AWG [0.4-0.6mm²] Wire — Receptacle
1	9	**1.520** 38.61	**.678** 17.22	**.165-.455** 4.19-11.56	**.350** 8.89	A	—	747516-7	747516-8
						B	—	747516-9	—
2	15	**1.520** 38.61	**1.002** 25.45	**.165-.455** 4.19-11.56	**.350** 8.89	A	—	747532-7	—
						B	—	747532-8	—
3	25	**1.520** 38.61	**1.550** 39.37	**.165-.455** 4.19-11.56	**.350** 8.89	A	—	747548-8	—
						B	—	747548-9	—
4	37	**1.867** 47.42	**2.205** 56.01	**.338-.562** 8.59-14.28	**.450** 11.43	B	747564-8	747564-9	—

Note: Components of the kits are shipped unassembled and bulk-packaged in quantities of 100 pieces.
†Maximum cable diameter after jacket and braid removed.

Note: All part numbers are RoHS compliant.

Catalog 82068
Revised 4-12

www.te.com

Dimensions are shown for reference purposes only. Specifications subject to change.

Dimensions are in inches and millimeters unless otherwise specified.
USA: +1 (800) 522-6752

Canada: +1 (905) 475-6222
Mexico/C. Am.: +52 (0) 55-1106-0800
Latin/S. Am.: +54 (0) 11-4733-2200
Germany: +49 (0) 6251-133-1999

UK: +44 (0) 800-267666
France: +33 (0) 1-3420-8686
Netherlands: +31 (0) 73-6246-999
China: +86 (0) 400-820-6015

HDE-20 Shielding Hardware Enclosure Kits

Each kit contains:

- Connector
- Inner shield
- Outer shield
- Enclosure
- Two jackscrews

Ferrules must be purchased separately.

Material and Finish:

Connector Shell—Steel, tin plated
Connector Insert—94V-0 rated thermoplastic, black
Shield—Steel, tin plated
Enclosure—PVC, black
Jackscrews—Zinc alloy
Contacts—Phosphor bronze
Contact Finish—Duplex plated:
A—.000030 [0.00076] gold on mating end, tin on termination end, with entire contact nickel underplated
B—Gold flash on mating end, tin on termination end, with entire contact nickel underplated

Related Product Data:

Contact Arrangements—page 40
Performance Characteristics—page 41
Application Tooling—pages 121-123
Mateable Connectors:
HDP—pages 90-97
HD-20 Board Mount—pages 54-71, 78-85, 87-89
Mating Hardware—pages 146-150, 153, 155
Mating/Panel Mounting—page 42

Plug

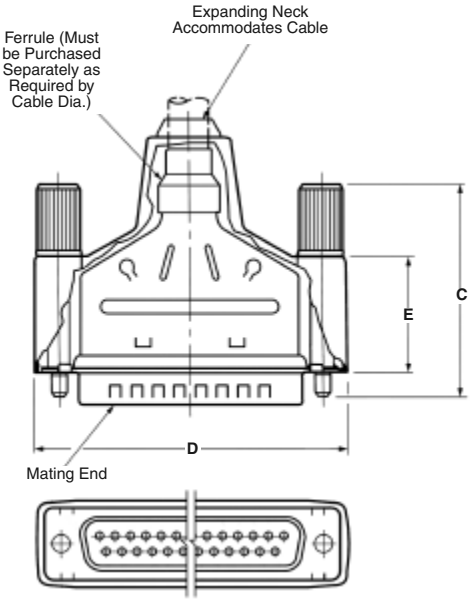

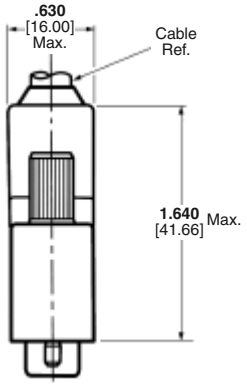

Technical Documents:

Product Specifications—
108-40011
108-40030

Application Specifications—
114-40002
114-40003
114-40006
114-40008

Instruction Sheet—408-9172

Note: Instruction Sheets for TE Tooling are packaged with the tooling. For additional information call the Tooling Assistance Center: **1-800-722-1111.**

Shell Size	No. of Contact Pos.	Dimensions C	D	E	Recommended Cable Outer Dia. Range	Max. Inner Cable Bundle Dia.†	Contact Finish (Plating Code)	Kit Part Numbers Contact I.D. No. 1 for 30-26 AWG [0.05-0.15mm²] Plug	Contact I.D. No. 2 for 26-22 AWG [0.15-0.4mm²] Plug	Contact I.D. No. 3 for 22-20 AWG [0.4-0.6mm²] Plug	Shielding Enclosure Expansion Tool Cable O.D. (Max.)	Part No.
1	9	**1.640** 41.66	**1.355** 34.42	**.630** 16.00	**.190-.330** 4.83-8.38	**.330** 8.38	A	—	1-747944-5	—	**.330** 8.38	58241-4
							B	—	1-747944-6	—		
2	15	**1.640** 41.66	**1.685** 42.80	**.630** 16.00	**.190-.330** 4.83-8.38	**.330** 8.38	A	—	1-747946-5	—		
							B	—	1-747946-6	—		
3	25	**1.640** 41.66	**2.210** 56.13	**.630** 16.00	**.217-.435** 5.51-11.05	**.350** 8.89	A	1-747948-5	1-747948-6	—	**.450** 11.43	58241-1
							B	—	1-747948-8	1-747948-9		
4	37	**2.010** 51.05	**2.865** 72.77	**.730** 18.54	**.338-.562** 8.59-14.28	**.450** 11.43	A	1-747950-4	1-747950-5	—	**.572** 14.52	58241-2
							B	—	1-747950-6	—		

†Maximum cable diameter after jacket and braid removed.

Note: All part numbers are RoHS compliant.

Catalog 82068
Revised 4-12

www.te.com

Dimensions are shown for reference purposes only. Specifications subject to change.

Dimensions are in inches and millimeters unless otherwise specified.
USA: +1 (800) 522-6752

Canada: +1 (905) 475-6222
Mexico/C. Am.: +52 (0) 55-1106-0800
Latin/S. Am.: +54 (0) 11-4733-2200
Germany: +49 (0) 6251-133-1999

UK: +44 (0) 800-267666
France: +33 (0) 1-3420-8686
Netherlands: +31 (0) 73-6246-999
China: +86 (0) 400-820-6015

HDE-20 Shielding Hardware Enclosure Kits (Continued)

Each kit contains:

- Connector
- Inner shield
- Outer shield
- Enclosure
- Two jackscrews

Ferrules must be purchased separately.

Material and Finish:

Connector Shell—Steel, tin plated
Connector Insert—94V-0 rated thermoplastic, black
Shield—Steel, tin plated
Enclosure—PVC, black
Jackscrews—Zinc alloy
Contacts—Phosphor bronze
Contact Finish—Duplex plated:
A—.000030 [0.00076] gold on mating end, tin on termination end, with entire contact nickel underplated
B—Gold flash on mating end, tin on termination end, with entire contact nickel underplated

Related Product Data:

Contact Arrangements—page 40
Performance Characteristics—page 41
Application Tooling—pages 121-123
Mateable Connectors:
HDP—pages 90-97
HD-20 Board Mount—pages 54-71, 78-85, 87-89
Mating Hardware—pages 146-150, 153, 155
Mating/Panel Mounting—page 42

Receptacle

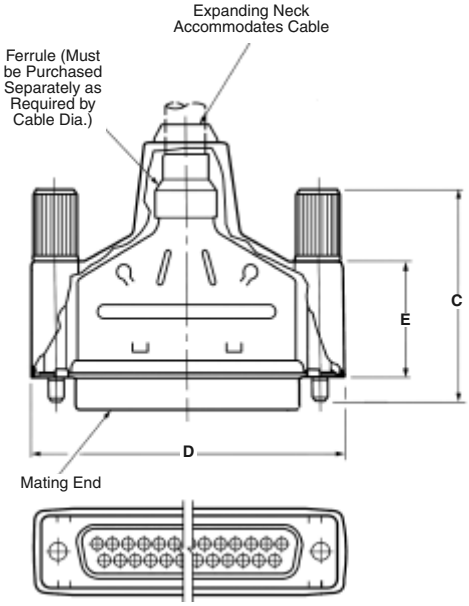

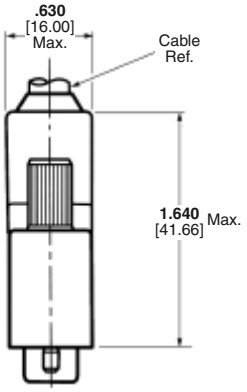

Technical Documents:

Product Specifications—
108-40011
108-40030
Application Specifications—
114-40002
114-40003
114-40006
114-40008
Instruction Sheet—408-9172

Note: Instruction Sheets for TE Tooling are packaged with the tooling. For additional information call the Tooling Assistance Center: **1-800-722-1111.**

Shell Size	No. of Contact Pos.	Dimensions C	D	E	Recommended Cable Outer Dia. Range	Max. Inner Cable Bundle Dia.†	Contact Finish (Plating Code)	Kit Part Numbers: Contact I.D. No. 1 for 30-26 AWG [0.05-0.15mm²] Receptacle	Kit Part Numbers: Contact I.D. No. 2 for 26-22 AWG [0.15-0.4mm²] Receptacle	Shielding Enclosure Expansion Tool: Cable O.D. (Max.)	Shielding Enclosure Expansion Tool: Part No.
1	9	**1.640** 41.66	**1.355** 34.42	**.630** 16.00	**.190-.330** 4.83-8.38	**.330** 8.38	A	1-747943-5	1-747943-6	**.330** 8.38	58241-4
							B	—	1-747943-7		
2	15	**1.640** 41.66	**1.685** 42.80	**.630** 16.00	**.190-.330** 4.83-8.38	**.330** 8.38	A	1-747945-5	—		
							B	—	—		
3	25	**1.640** 41.66	**2.210** 56.13	**.630** 16.00	**.217-.435** 5.51-11.05	**.350** 8.89	A	1-747947-5	1-747947-6	**.450** 11.43	58241-1
							B	—	1-747947-7		
4	37	**2.010** 51.05	**2.865** 72.77	**.730** 18.54	**.338-.562** 8.59-14.28	**.450** 11.43	A	—	—	**.572** 14.52	58241-2
							B	—	—		

†Maximum cable diameter after jacket and braid removed.

Note: All part numbers are RoHS compliant.

Catalog 82068
Revised 4-12

www.te.com

Dimensions are shown for reference purposes only. Specifications subject to change.

Dimensions are in inches and millimeters unless otherwise specified.
USA: +1 (800) 522-6752

Canada: +1 (905) 475-6222
Mexico/C. Am.: +52 (0) 55-1106-0800
Latin/S. Am.: +54 (0) 11-4733-2200
Germany: +49 (0) 6251-133-1999

UK: +44 (0) 800-267666
France: +33 (0) 1-3420-8686
Netherlands: +31 (0) 73-6246-999
China: +86 (0) 400-820-6015

HDE-20 Crimp Snap-In Contact Connectors

Ferrules for Shielding Hardware Kits

Stepped

Straight

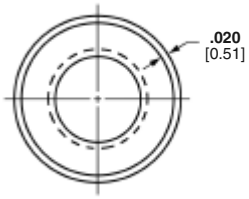

Shell Sizes	Style	L Dim.	Cable Diameter	Part Numbers	
				Ferrule	Die Sets*
1-3	Stepped	**.440** 11.18	**.165-.190** 4.19-4.83	3-747579-0	543424-3
1-3	Stepped	**.440** 11.18	**.190-.217** 4.83-5.51	3-747579-0	543424-2
1-3	Stepped	**.440** 11.18	**.217-.246** 5.51-6.25	3-747579-0	543424-8
1-3	Stepped	**.440** 11.18	**.246-.284** 6.25-7.21	3-747579-2	543424-1
1-3	Stepped	**.440** 11.18	**.284-.324** 7.21-8.23	3-747579-2	543424-7
1-3	Stepped	**.440** 11.18	**.324-.375** 8.23-9.53	3-747579-4	543424-6
1-3	Straight	**.440** 11.18	**.375-.435** 9.53-11.05	2-747579-7	543424-5
1-3	Straight	**.440** 11.18	**.400-.455** 10.16-11.56	3-747579-6	543424-4
4	Stepped	**.625** 15.88	**.230-.265** 5.84-6.73	2-747580-4	543425-2
4	Stepped	**.625** 15.88	**.338-.385** 8.59-9.78	2-747580-3	543425-1
4	Stepped	**.625** 15.88	**.375-432** 9.53-10.97	2-747580-1	58238-1
4	Stepped	**.625** 15.88	**.422-.490** 10.72-12.45	3-747580-1	58237-2
4	Straight	**.625** 15.88	**.480-.562** 12.19-14.28	2-747580-2	58237-1

*Die sets used with Hand Crimping Tool Part No. 543344-1 or Pneumatic Bench Tool Part No. 312522-3 equipped with Die Set Holder Part No. 58449-1.

Material and Finish:

Steel (annealed), tin plated

Related Product Data:

Shielding Hardware and Enclosure Kits—pages 116-119

Technical Documents:

Instruction Sheets—
408-9242
408-9243
408-9507
408-9508

Note: Instruction Sheets for TE Tooling are packaged with the tooling. For additional information call the Tooling Assistance Center: **1-800-722-1111.**

Application Tooling for Shielding Hardware Kits

Hand Crimping Tool No. 543344-1 (Requires Die Sets, see table above.)

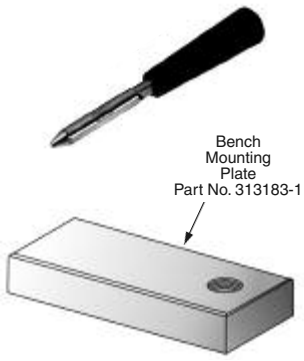

Shielding Enclosure Expansion Tools
Part No. 58241-1 (.450 [11.43])†
58241-2 (.572 [14.53])†
58241-4 (.330 [8.38])†
†Maximum Cable Diameter
(Instruction Sheet—408-9507)

Pneumatic Bench Tool No. 312522-3 (Requires Die Set Holder No. 58449-1.)

Note: All part numbers are RoHS compliant.

Catalog 82068
Revised 4-12

www.te.com

Dimensions are shown for reference purposes only. Specifications subject to change.

Dimensions are in inches and millimeters unless otherwise specified.
USA: +1 (800) 522-6752

Canada: +1 (905) 475-6222
Mexico/C. Am.: +52 (0) 55-1106-0800
Latin/S. Am.: +54 (0) 11-4733-2200
Germany: +49 (0) 6251-133-1999

UK: +44 (0) 800-267666
France: +33 (0) 1-3420-8686
Netherlands: +31 (0) 73-6246-999
China: +86 (0) 400-820-6015

HDE-20 Contacts, Precision Formed

Material and Finish:

Phosphor bronze, duplex plated as follows:

A—Duplex plated .000030 [0.00076] gold on mating end, tin on termination end, with entire contact nickel underplated

B—Gold flash on mating end, tin on termination end, with entire contact nickel underplated

Related Product Data:

Performance Characteristics—page 41

Connectors used with:
HDE—pages 112-119

Technical Documents:

Product Specifications—
108-40011
108-40030

Application Specifications—
114-40002
114-40003
114-40006
114-40008

Instruction Sheet—408-6738

Note: Instruction Sheets for TE Tooling are packaged with the tooling. For additional information call the Tooling Assistance Center: **1-800-722-1111.**

Interchangeable Contacts, Crimp Snap-In

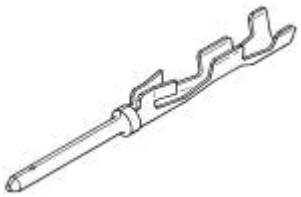

Pin

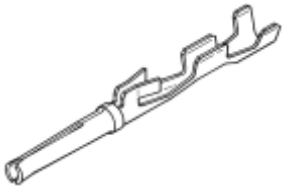

Socket

Wire Size Range AWG mm²	Code*	Insulation Diameter		Contact Finish (Plating Code)	Contact Part Numbers	
		Single Wire	Two Wire		Pin Strip Form	Socket Strip Form
26-22 0.15-0.4	4	**.054** 1.37	**.039** 0.99	A	—	1-745269-1
				B	1-745266-0	1-745269-0
22-18 0.4-0.8	3	**.075** 1.91	**.054** 1.37	A	1-745267-0	1-745270-1
				B	—	1-745270-0

* A Code indicating accepted wire size range is stamped inside insulation crimp barrel of each contact.

Notes: 1. Extraction Tool No. 91232-1 is used to remove pin and socket contacts.
2. Strip form contacts shipped 10,000 pieces/reel.

Note: All part numbers are RoHS compliant.

Catalog 82068
Revised 4-12

www.te.com

Dimensions are shown for reference purposes only. Specifications subject to change.

Dimensions are in inches and millimeters unless otherwise specified.
USA: +1 (800) 522-6752

Canada: +1 (905) 475-6222
Mexico/C. Am.: +52 (0) 55-1106-0800
Latin/S. Am.: +54 (0) 11-4733-2200
Germany: +49 (0) 6251-133-1999

UK: +44 (0) 800-267666
France: +33 (0) 1-3420-8686
Netherlands: +31 (0) 73-6246-999
China: +86 (0) 400-820-6015

HDE-20 Application Tooling

Hand Tools with Modular Heads

Technical Documents:

Instruction Sheets—
408-6790
408-9414
408-6789

Note: Instruction Sheets for TE Tooling are packaged with the tooling. For additional information call the Tooling Assistance Hotline: **1-800-722-1111.**

A modular interchangeable head provides versatility to these tools. Along with the head used to terminate Subminiature D connectors, heads are available to terminate other TE product lines.

The head used to terminate the Subminiature D, HDE connectors can be used with a manual pistol grip tool, an air pistol grip tool and a bench mount power assembly. These tools terminate one unstripped wire per cycle and index the connector to the next terminating position. The head rotates to permit optimum access to the wiring area.

Manual Pistol Grip Tool

Handle and Head Tool Assembly No. 608868-1
Handle No. 58074-1
Head Assembly No. 58063-2

This tool is manually actuated, using modular heads.

Air Pistol Grip Tool

Handle No. 58075-1
Head Assembly No. 58063-2

Air actuated, utilizing modular heads.

Bench Mounted Tools with Modular Heads

Bench Mount Pneumatic Power Assembly

Bench Assembly No. 58338-1
Head Assembly No. 58063-2

This tool is air actuated with either a foot or knee switch.

Bench Mount Electric Power Assembly

Head Assembly No. 58063-2

This tool electrically powered and actuated by a foot switch.

Note: All part numbers are RoHS compliant.

Catalog 82068
Revised 4-12

www.te.com

Dimensions are shown for reference purposes only. Specifications subject to change.

Dimensions are in inches and millimeters unless otherwise specified.
USA: +1 (800) 522-6752

Canada: +1 (905) 475-6222
Mexico/C. Am.: +52 (0) 55-1106-0800
Latin/S. Am.: +54 (0) 11-4733-2200
Germany: +49 (0) 6251-133-1999

UK: +44 (0) 800-267666
France: +33 (0) 1-3420-8686
Netherlands: +31 (0) 73-6246-999
China: +86 (0) 400-820-6015

HDE-20 Application Tooling (Continued)

Product Facts

- **Low applied costs**
- **Automatic termination of jacketed cable**
- **Automatic continuity check and shorts test**
- **Single- or double-ended assemblies**
- **Microprocessor controlled with touch input screen**
- **Stored program capability**
- **Selective termination of connector positions**
- **Rapid tooling changeover for different connector types**
- **Handles a variety of TE insulation-displacement connectors**
- **Terminates both multicolor and single-color wires**
- **Remote programming capability**
- **Straight or right-angle wire dress**
- **Control Module 852423-1 120 VAC**

Technical Documents:

Instruction Sheets
408-7777 Manual Arbor Tool

Note: Instruction Sheets for TE Tooling are packaged with the tooling. For additional information call the Tooling Assistance Center: **1-800-722-1111.**

Control Module No. 852423-1

CHAMPOMATOR 2.5 Machine No. 354786-4

Manual Arbor Tool

Arbor Tool No. 91085-2
Applicators:
Wire O.D. .041-.060 [1.04-1.52]—No. 543157-1 (tool mount), 543426-1 (termination tool)
Wire O.D. .040 [1.02] and smaller—No. 543157-1 (tool mount), 543426-2 (termination tool)

Note: All part numbers are RoHS compliant.

CHAMPOMATOR 3A Terminating Machine

This machine is the high-productivity way to terminate multiconductor, jacketed cable with a variety of TE connectors having insulation displacement contacts. It automatically sorts the wires, and terminates them in a programmed sequence. The sequence may use all or some of the connector contacts, such as for various RS-232 wiring patterns.

All cable assemblies are tested for continuity and shorts.

The machine is microprocessor controlled, and programmed by a touch input screen. The easy programming simplifies the process and reduces training requirements. The machine's internal storage capability can retain up to 50 cable assemblies, which can be easily retrieved by number or name. Production monitoring and diagnostics can also be accessed through the touch screen.

Contact TE for the tooling required for your specific applications.

CHAMPOMATOR 2.5 Terminating Machine

This is a compact, semi-automatic bench machine. It is microprocessor controlled, and programmed using a membrane switch keyboard. The potential machine rate is one pair of wires per second.

Contact TE for the tooling required for your specific applications.

The CHAMPOMATOR Model 2.5 Bench Terminating Machine—**Part No. 354786-4** is used in conjunction with Control Module—**Part No. 852423-1.**

Contact TE for application specific requirements.

Manual Arbor Tool

The arbor tool with applicator is used to terminate jacketed cable. Wires are neatly routed and trimmed to length with the cable jacket close to the connector. 400 to 800 terminated wires per hour are typical.

Catalog 82068
Revised 4-12

www.te.com

Dimensions are shown for reference purposes only. Specifications subject to change.

Dimensions are in inches and millimeters unless otherwise specified.
USA: +1 (800) 522-6752

Canada: +1 (905) 475-6222
Mexico/C. Am.: +52 (0) 55-1106-0800
Latin/S. Am.: +54 (0) 11-4733-2200
Germany: +49 (0) 6251-133-1999

UK: +44 (0) 800-267666
France: +33 (0) 1-3420-8686
Netherlands: +31 (0) 73-6246-999
China: +86 (0) 400-820-6015

Subminiature D Connectors HDF-20 for Flat Ribbon Cable

Product Facts

- Available in all 5 standard shell sizes
- Visual inspection of termination possible
- Fluted cover provides positive alignment of cable prior to termination
- Wide range of application tooling
- Patented insulation displacement contact latches into the connector cover
- Contact design provides a "gas-tight" termination
- Contacts accept 28 AWG [0.08mm2] solid and stranded, and 26 AWG [0.15mm2] solid and stranded round conductor flat ribbon cable on .050 [1.27] centers
- Qualified to Battelle Level III environment
- Recognized under the Component Program of Underwriters Laboratories Inc., File No. E28476
- Certified by Canadian Standards Association, File No. LR 7189
- Listed and complies with UL 1863, Communication Circuit Accessories File No. E81956

Plug — Low Profile Metal Shell

Receptacle — Low Profile Metal Shell

No. of Pos. & (Shell Size)	Cable Stabilizer Part No.	Plug Part Nos.		Receptacle Part Nos.	
		With Standard Mounting Holes	With 4-40 Threaded Inserts	With Standard Mounting Holes	With 4-40 Threaded Inserts
9 (1)	747275-4	1658613-4	1658608-4	1658612-4	1658610-4
15 (2)	747275-3	1658613-3	1658608-3	1658612-3	1658610-3
25 (3)	747275-2	1658613-2	1658608-2	1658612-2	1658610-2
37 (4)	747275-1	1658613-1	1658608-1	1658612-1	1658610-1
50 (5)	746785-1	—	1658607-1	—	1658606-1

Note: All assemblies are supplied with housing and cover pre-assembled. Optional cable stabilizer must be ordered separately.

Material

Front Shell—Steel, tin or tin plated

Housing, Cover & Cable Stabilizer—Thermoplastic, 94V-0, black

Threaded Inserts—Brass, unplated

Contacts—Phosphor bronze, duplex plated .000030 [0.00076] min. gold on mating end, .000100-.000200 [0.00254-0.00508] bright tin on termination end with entire contact underplated .000050 [0.00127] min. nickel

Related Product Data

Contact Arrangement—page 40

Performance Characteristics—page 41

Mateable Receptacles:
HDF-20 Metal-Shell—page 124
HDE—pages 110-121 (Sizes 1–4 only)
HDP—pages 90-109
HD-20 Board Mount—pages 54-71, 78-85, 87-89

Mating/Panel Mounting—page 126

Ribbon Cable—page 125

Accessories:
Commoning Strip—page 146

Mating Hardware—pages 146-150, 153 & 154

Application Tooling—page 127

Technical Documents

Product Specification—108-40012

Note: All part numbers are RoHS compliant.

Catalog 82068
Revised 4-12

www.te.com

Dimensions are shown for reference purposes only. Specifications subject to change.

Dimensions are in inches and millimeters unless otherwise specified.
USA: +1 (800) 522-6752

Canada: +1 (905) 475-6222
Mexico/C. Am.: +52 (0) 55-1106-0800
Latin/S. Am.: +54 (0) 11-4733-2200
Germany: +49 (0) 6251-133-1999

UK: +44 (0) 800-267666
France: +33 (0) 1-3420-8686
Netherlands: +31 (0) 73-6246-999
China: +86 (0) 400-820-6015

HDF-20 Low Profile All-Plastic Connectors (for Round Conductor Flat Ribbon Cable)

Material and Finish

Housing, Cover & Cable Stabilizer—Black thermoplastic, 94V-0 rated

Threaded Inserts—Brass, unplated

Pin Contacts—Phosphor bronze, duplex plated .000030 [0.00076] gold on mating end, .000100-.000200 [0.00254-0.00508] bright tin on termination end, with entire contact underplated .000050 [0.00127] nickel

Related Product Data

Contact Arrangement—page 40

Performance Characteristics—page 41

Mateable Receptacles:
HDF-20 All-Plastic—page 124
HD-20 Board Mount—pages 54-71, 78-85, 87-89
HDE All-Plastic—pages 147, 148

Mating/Panel Mounting—page 126

Ribbon Cable—page 125

Accessories:
Mating Hardware—pages 146-150, 153, 155

Application Tooling—page 127

Technical Documents

Product Specifications—108-40012 HDF-20 Low Profile Connectors

Plug Assemblies

Housing and Covers are Preassembled; Cable Stabilizer is Separate.

Receptacle Assemblies

Housing and Covers are Preassembled; Cable Stabilizer is Separate.

No. of Contact Pos. & (Shell Size)	Optional Cable Stabilizer Part No.	Plug Assembly Part No.		Receptacle Assembly Part No.	
		With Standard Mounting Holes	With Threaded Inserts	With Standard Mounting Holes	With Threaded Inserts
9 (1)	747275-4	1658615-4	1658611-4	1658614-4	1658609-4
15 (2)	747275-3	1658615-3	1658611-3	1658614-3	1658609-3
25 (3)	747275-2	1658615-2	1658611-2	1658614-2	1658609-2
37 (4)	747275-1	1658615-1	—	1658614-1	1658609-1

Note: All assemblies are supplied with housing and cover pre-assembled. Optional cable stabilizer must be ordered separately.

Ribbon Cable Parameters

No. of Conductors	28 AWG [0.08mm²] Part No.		26 AWG [0.15mm²] Part No.
	Length Per Reel		Length Per Reel
	100 Ft. [30.5m]	500 Ft. [152.4m]	500 Ft. [152.4m]
9	1-57040-2	1-971111-2	57034-2
15	1-57040-5	1-971111-5	57034-5
25	57040-2	971111-2	57034-9
37	1-57040-8	1-971111-8	1-57034-3
50	57040-6	971111-6	1-57034-5

Note: All part numbers are RoHS compliant.

Catalog 82068
Revised 4-12

www.te.com

Dimensions are shown for reference purposes only. Specifications subject to change.

Dimensions are in inches and millimeters unless otherwise specified.
USA: +1 (800) 522-6752

Canada: +1 (905) 475-6222
Mexico/C. Am.: +52 (0) 55-1106-0800
Latin/S. Am.: +54 (0) 11-4733-2200
Germany: +49 (0) 6251-133-1999

UK: +44 (0) 800-267666
France: +33 (0) 1-3420-8686
Netherlands: +31 (0) 73-6246-999
China: +86 (0) 400-820-6015

HDF-20 Plugs/Receptacles Mating and Panel Mounting Specifications

Plug/Receptacle Mating

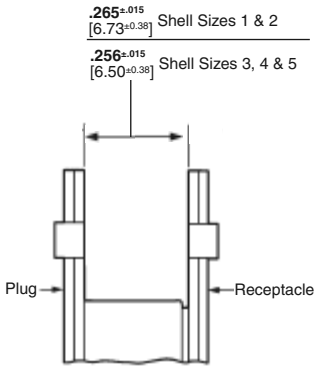

The .265/.256 [6.73/6.50] dimensions are required to assure full mating of connector halves. These dimensions must be taken into consideration when determining the method of mounting, panel thickness, etc.

Panel Mounting

Plugs and receptacles can be mounted to a panel from either the front or rear, using a variety of accessory hardware. Typical examples are shown below.

Typical Front-Panel Mounted HDF-20 Plug

Typical Rear-Panel Mounted HDF-20 Plug

Panel Cutouts

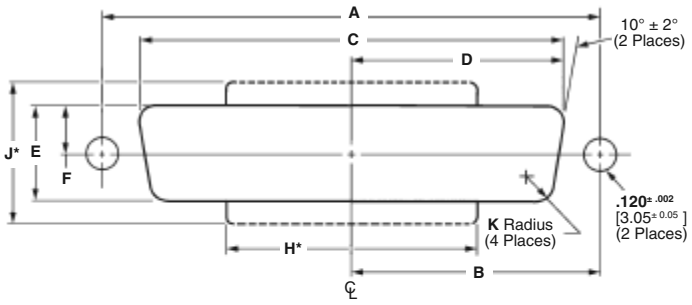

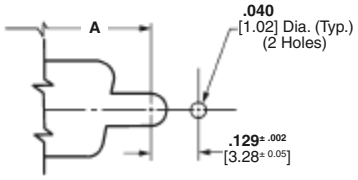

Cutout for Rear Mount and Short Latching Blocks

Shell Size (Pos.)	Mounting Method Front/Rear Panel	Dimensions								
		A	B	C	D	E	F	H*	J*	K
1 (9)	Front	**.984** 24.99	**.492** 12.50	**.874** 22.20	**.437** 11.10	**.513** 13.03	**.257** 6.53	—	—	**.083** 2.11
	Rear	**.984** 24.99	**.492** 12.50	**.806** 20.47	**.403** 10.24	**.449** 11.41	**.225** 5.72	**.550** 13.97	**.750** 19.05	**.132** 3.35
2 (15)	Front	**1.312** 33.33	**.656** 16.66	**1.202** 30.53	**.601** 15.27	**.513** 13.03	**.257** 6.53	—	—	**.083** 2.11
	Rear	**1.312** 33.33	**.656** 16.66	**1.134** 28.80	**.567** 14.40	**.449** 11.41	**.225** 5.72	**.730** 18.54	**.750** 19.05	**.132** 3.35
3 (25)	Front	**1.852** 47.04	**.926** 23.52	**1.743** 44.27	**.872** 22.15	**.513** 13.03	**.257** 6.53	—	—	**.083** 2.11
	Rear	**1.852** 47.04	**.926** 23.52	**1.674** 42.52	**.842** 21.39	**.449** 11.41	**.225** 5.72	**1.275** 32.39	**.750** 19.05	**.132** 3.35
4 (37)	Front	**2.500** 63.50	**1.250** 31.75	**2.391** 60.73	**1.196** 30.38	**.513** 13.03	**.257** 6.53	—	—	**.083** 2.11
	Rear	**2.500** 63.50	**1.250** 31.75	**2.326** 59.08	**1.163** 29.54	**.449** 11.41	**.225** 5.72	**1.920** 46.05	**.750** 16.13	**.132** 3.35
5 (50)	Front	**2.406** 61.11	**1.203** 30.56	**2.297** 58.34	**1.149** 29.19	**.623** 15.82	**.312** 7.93	—	—	**.083** 2.11
	Rear	**2.406** 61.11	**1.203** 30.56	**2.218** 56.34	**1.109** 28.17	**.555** 14.10	**.278** 7.06	**1.753** 44.52	**.750** 19.05	**.132** 3.35

*Panel cutout configuration with H and J dimensions provides clearance for mounting connectors with cable clamps.

Catalog 82068
Revised 4-12

www.te.com

Dimensions are shown for reference purposes only. Specifications subject to change.

Dimensions are in inches and millimeters unless otherwise specified.
USA: +1 (800) 522-6752

Canada: +1 (905) 475-6222
Mexico/C. Am.: +52 (0) 55-1106-0800
Latin/S. Am.: +54 (0) 11-4733-2200
Germany: +49 (0) 6251-133-1999

UK: +44 (0) 800-267666
France: +33 (0) 1-3420-8686
Netherlands: +31 (0) 73-6246-999
China: +86 (0) 400-820-6015

HDF-20 Application Tooling

Application Tooling

Hand Tool Kit No. 768340-1

Consists of a hand tool frame, a universal base assembly, a bench mount kit, and connector-specific tooling for AMP-LATCH Standard and Novo Receptacles, Card-Edge Connectors, and AMPLIMITE HDF-20 Connectors.

Note: For 50-position HDF connectors, you must also order Connector-Specific Kit No. 768350-1.

Note: All part numbers are RoHS compliant.

Catalog 82068
Revised 4-12

www.te.com

Dimensions are shown for reference purposes only. Specifications subject to change.

Dimensions are in inches and millimeters unless otherwise specified.
USA: +1 (800) 522-6752

Canada: +1 (905) 475-6222
Mexico/C. Am.: +52 (0) 55-1106-0800
Latin/S. Am.: +54 (0) 11-4733-2200
Germany: +49 (0) 6251-133-1999

UK: +44 (0) 800-267666
France: +33 (0) 1-3420-8686
Netherlands: +31 (0) 73-6246-999
China: +86 (0) 400-820-6015

HD-20 Solder Cup Connectors

Product Facts

- Preloaded duplex-plated solder cup contacts
- Shell finish in choice of standard zinc or tin
- Two-piece 94V-0 rated plastic insert
- Anti-solderwicking contact design
- Intermateable with other subminiature D connectors
- Available in 9, 15, 25 and 37 position (shell sizes 1-4) plugs and receptacles
- Easy application without special application tools
- Shields offer full EMI shielding and ESD insulation
- Crimped shield termination for low impedance
- Shield crimp provides strain relief
- Shields may be post molded or covered with enclosures
- Recognized under the Component Program of Underwriters Laboratories, Inc., File No. E28476
- Listed under Underwriters Laboratories Inc., connectors for use in data, signal, control & Power Applications — components, File No. E127344
- Certified by Canadian Standards Association, File No. LR 97981

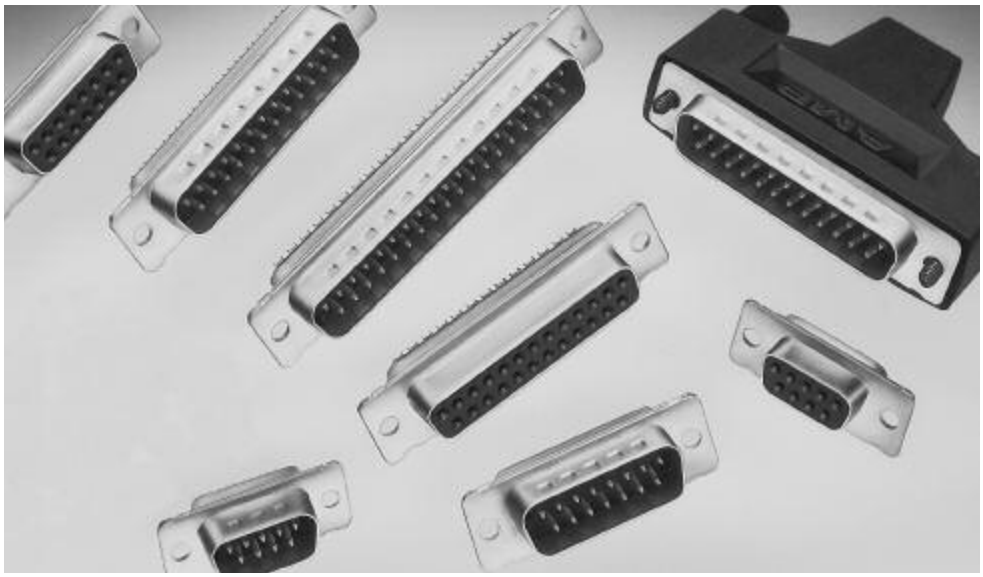

Catalog 82068
Revised 4-12

www.te.com

Dimensions are shown for reference purposes only. Specifications subject to change.

Dimensions are in inches and millimeters unless otherwise specified.
USA: +1 (800) 522-6752

Canada: +1 (905) 475-6222
Mexico/C. Am.: +52 (0) 55-1106-0800
Latin/S. Am.: +54 (0) 11-4733-2200
Germany: +49 (0) 6251-133-1999

UK: +44 (0) 800-267666
France: +33 (0) 1-3420-8686
Netherlands: +31 (0) 73-6246-999
China: +86 (0) 400-820-6015

HD-20 Solder Cup Connectors (Continued)

Material and Finish:

Shell—Steel, tin or zinc plated

Insert—94V-0 rated thermoplastic, black

Contacts—Phosphor bronze; duplex plated with gold flash on mating end, tin on solder cup, with entire contact nickel underplated

Related Product Data:

Mateable Connectors:

HDE—pages 110-119

HDF—pages 124-126

HDP—pages 90-101

HD-20 Solder Cup—pages 128-130

HD-20 Board Mount—pages 54-71, 78-85, 87-89

Cable Clamps—pages 132, 133, 135-137, 140, 141, 144, 145

Mating Hardware—pages 146-150, 151-154

Technical Documents:

Product Specification
108-40031

Instruction Sheet
408-9193

Plug

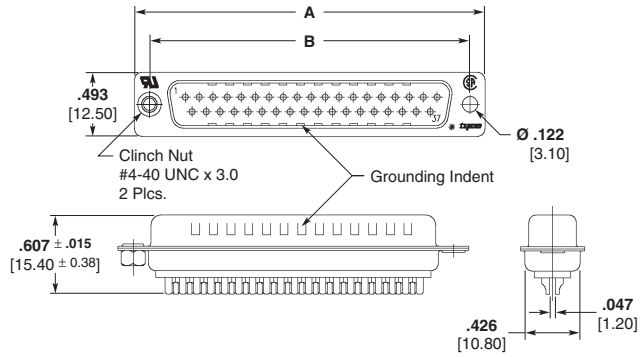

Receptacle

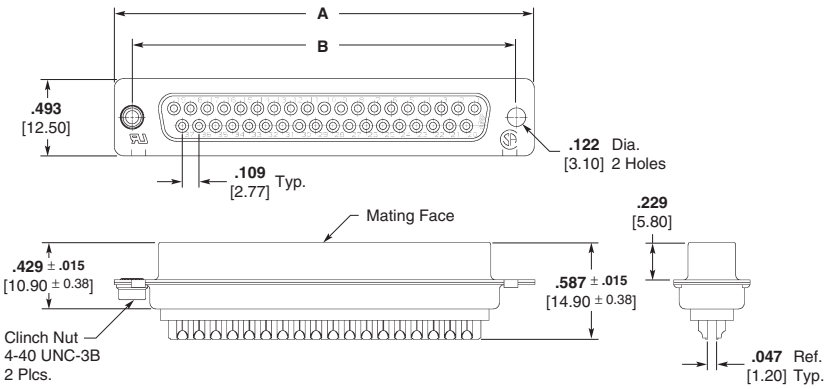

Shell Size	No. of Contact Positions	Dimensions		Plug Part Numbers		Receptacle Part Numbers	
		A	B	Tin Plated Shell	Zinc Plated Shell	Tin Plated Shell	Zinc Plated Shell
1	9	**1.210** 30.80	**.984** 24.99	5-747904-2	5-747904-2	5-747905-2	5-747905-2
2	15	**1.544** 39.20	**1.313** 33.32	5-747908-2	5-747908-2	5-747909-2	5-747909-2
3	25	**2.089** 53.01	**1.853** 47.04	5-747912-2	5-747912-2	5-747913-2	5-747913-2
4	37	**2.734** 69.40	**2.502** 63.50	5-747916-2	5-747916-2	5-747917-2	747917-4

Note: All part numbers are RoHS compliant.

Catalog 82068
Revised 4-12

www.te.com

Dimensions are shown for reference purposes only. Specifications subject to change.

Dimensions are in inches and millimeters unless otherwise specified.
USA: +1 (800) 522-6752

Canada: +1 (905) 475-6222
Mexico/C. Am.: +52 (0) 55-1106-0800
Latin/S. Am.: +54 (0) 11-4733-2200
Germany: +49 (0) 6251-133-1999

UK: +44 (0) 800-267666
France: +33 (0) 1-3420-8686
Netherlands: +31 (0) 73-6246-999
China: +86 (0) 400-820-6015

HD-20 Solder Cup Shielding Hardware Enclosure Kits

Each kit contains

- Connector with preloaded, nonremovable contacts
- Shield
- Enclosure
- Two jackscrews

Material and Finish:

Connector Shell—Steel, tin plated
Connector Insert—94V-0 rated thermoplastic, black
Shields—Steel, tin plated
Enclosure—PVC, black
Jackscrews—Brass, zinc coated
Contacts—Phosphor bronze; duplex plated with gold flash on mating end, tin on solder cup, with entire contact nickel underplated

Related Product Data:

Mateable Connectors:
HDE—pages 110-119
HDF—pages 124-126
HDP—pages 90-101
HD-20 Solder Cup—pages 128-130
HD-20 Board Mount—pages 82-85, 87-89

Technical Documents:

Product Specification
108-40031
Instruction Sheets
408-9193

Plug and Receptacles

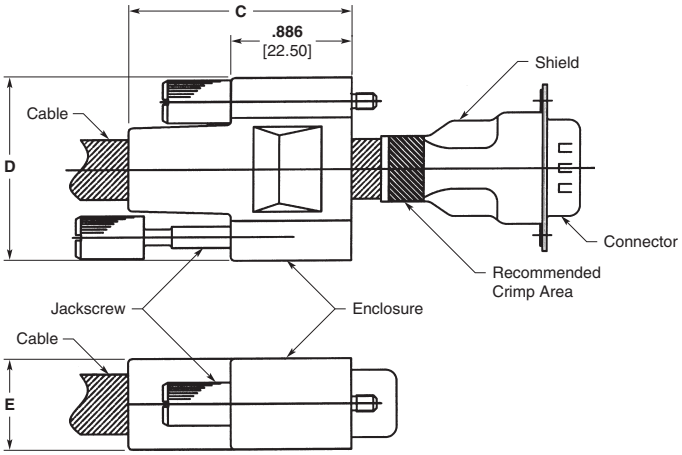

Shell Size	No. of Contact Positions	Dimensions C	Dimensions D	Dimensions E	Cable Insulation Diameter	Kit Part Numbers Plug	Kit Part Numbers Receptacle	Shielding Enclosure Expansion Tool Cable O.D. (Max.)	Shielding Enclosure Expansion Tool Part Number
1	9	**1.64** 41.67	**1.33** 33.74	**.659** 16.74	**.217-.270** 5.51-6.86	1571650-4	1571654-4	**.355** 9.02	58241-4
					.270-.324 6.86-8.23	1571650-5	1571654-5		
						1571650-6	1571654-6		
					.324-.385 8.23-9.78	1571650-6	1571654-6		
2	15	**1.64** 41.67	**1.65** 41.86	**.659** 16.74	**.217-.270** 5.51-6.86	1571651-4	1571655-4	**.355** 9.02	58241-4
					.270-.324 6.86-8.23	1571651-5	1571655-5		
						1571651-6	1571655-6		
					.324-.385 8.23-9.78	1571651-6	1571655-6		
3	25	**1.64** 41.67	**2.20** 55.86	**.659** 16.74	**.217-.270** 5.51-6.86	1571652-4	1571656-4	**.465** 11.56	58241-1
					.270-.324 6.86-8.23	1571652-5	1571656-5		
						1571652-6	1571656-6		
					.324-.385 8.23-9.78	1571652-6	1571656-6		
4	37	**2.35** 59.67	**2.82** 71.63	**.659** 16.74	**.455-.480** 11.58-12.19	1571653-2	1571657-2	**.562** 14.28	58241-2

Note: Components of the kits are shipped unassembled and bulk-packaged in quantities of 100 pieces.

HD-20 Solder Cup Shielding Hardware Crimping Tool

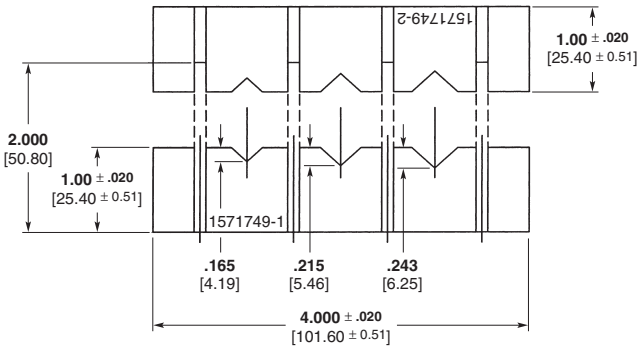

Assembled Tooling: Part Number 1571750-1
Individual Tools (for customer fabrication):
1571749-1 & 1571749-2

Note: All part numbers are RoHS compliant.

Catalog 82068
Revised 4-12

www.te.com

Dimensions are shown for reference purposes only. Specifications subject to change.

Dimensions are in inches and millimeters unless otherwise specified.
USA: +1 (800) 522-6752

Canada: +1 (905) 475-6222
Mexico/C. Am.: +52 (0) 55-1106-0800
Latin/S. Am.: +54 (0) 11-4733-2200
Germany: +49 (0) 6251-133-1999

UK: +44 (0) 800-267666
France: +33 (0) 1-3420-8686
Netherlands: +31 (0) 73-6246-999
China: +86 (0) 400-820-6015

Accessories

Numerous accessories are available for strain relief and cable clamping, shielding, connector-to-connector mating, connector-to-connector pc board mounting, and keying. These accessories are illustrated and tabled on the following pages.

To help discern the accessories available for a particular connector type, refer to the Product Selection Guide at the beginning of the connector section. Also, the connector the accessory is used with is listed under the Related Product Data heading next to the accessory listing.

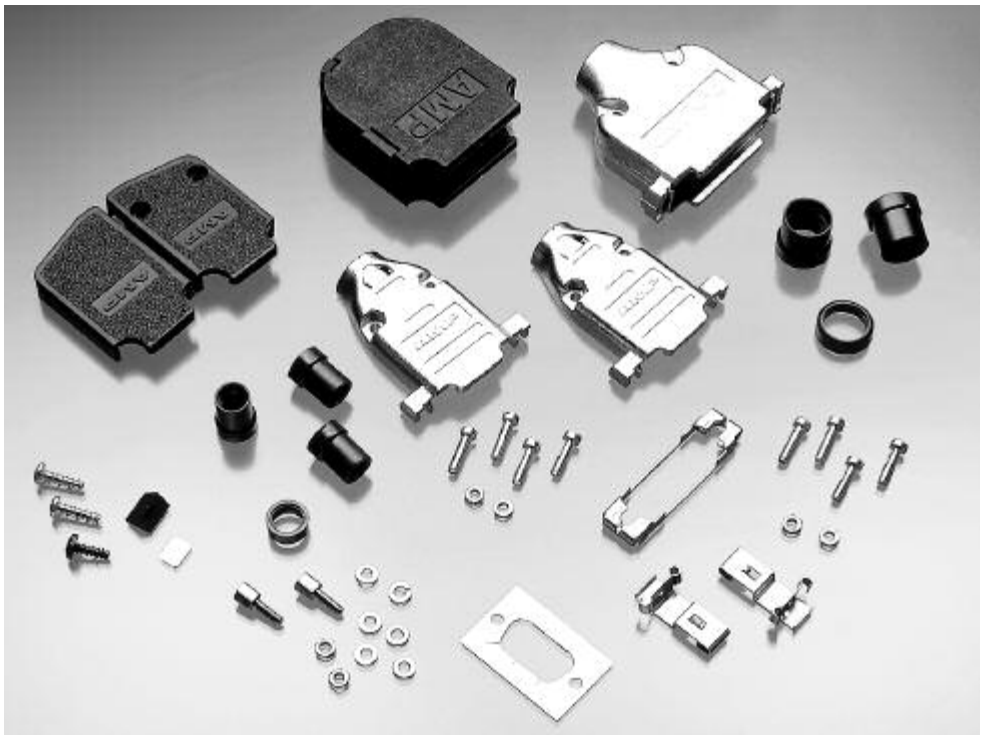

Section Contents

Unshielded Cable Clamps
Universal Cable Clamps for Jacketed Cable 132
One-Piece, All-Plastic Cable Clamp 133, 134
Straight/90° Low Profile Cable Clamps 135
Slide-On Back Covers 136
Box and Lid, Straight/90° Exit 137
Clam Shell, Straight/45° 138
Straight Exit, Dataphone 139
Straight Exit for Jacketed Cable (Two-Piece) 139
Straight/90° Exit 140

Shielded Cable Clamps
Straight Exit RFI/EMI Shields for Jacketed Cable (HDE, HDP) 141
Straight/90° Exit RFI/EMI Die Cast Shields for Jacketed Cable (HDE, HDP) 142
Crimp and Split-Ring Ferrules 143-145

Hardware
Commoning Strip 146
Male Screw Retainers for Metal-Shell Connectors (HDE, HDP) 146
Male Screw Retainers for All-Plastic Connectors (HDE) . . . 147
Male Screw Retainers for Metal-Shell and All-Plastic Connectors (HDF) 147
Female Screwlocks for Metal-Shell and All-Plastic Connectors (HDE, HDF, HDP) 148
Slide Latches 149, 150
Slide Latch Clips 151
Locking Post Assemblies 151
Spring Latches (Two-Piece) 152
Latching Blocks (HDE, HDF, HDP, HD) 153, 154
Standoff Bushings 155
Keying Plug 155
EMI/RFI Gasket 155

Catalog 82068
Revised 4-12

www.te.com

Dimensions are shown for reference purposes only. Specifications subject to change.

Dimensions are in inches and millimeters unless otherwise specified.
USA: +1 (800) 522-6752

Canada: +1 (905) 475-6222
Mexico/C. Am.: +52 (0) 55-1106-0800
Latin/S. Am.: +54 (0) 11-4733-2200
Germany: +49 (0) 6251-133-1999

UK: +44 (0) 800-267666
France: +33 (0) 1-3420-8686
Netherlands: +31 (0) 73-6246-999
China: +86 (0) 400-820-6015

Unshielded Cable Clamps

Universal Cable Clamps for Jacketed Cable

Material and Finish:

Cable Clamp Housing—
Thermoplastic, black

Cable Clamp Wedge Set—
Thermoplastic, black

4-40 Mounting Screws—
Steel, zinc plated

Related Product Data:

Connectors used with:
HDE Metal-Shell—pages 114 & 115
HDP Metal-Shell—pages 90-102

Other accessory capabilities:
Spring Latches (Two Piece)—
page 152

Technical Documents:

Instruction Sheet—408-9238

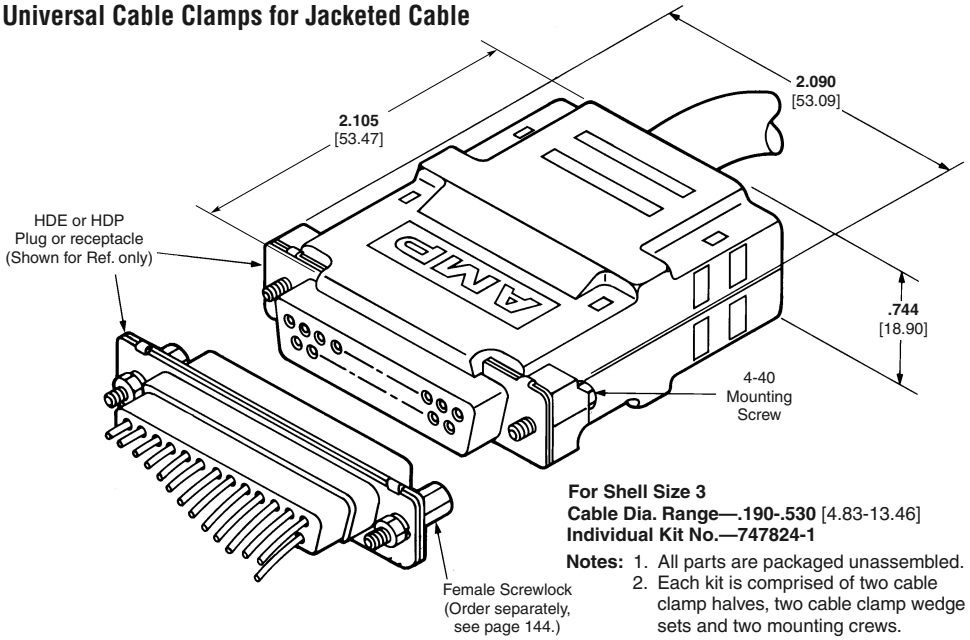

For Shell Size 3
Cable Dia. Range—.190-.530 [4.83-13.46]
Individual Kit No.—747824-1

Notes: 1. All parts are packaged unassembled.
2. Each kit is comprised of two cable clamp halves, two cable clamp wedge sets and two mounting crews.

Straight/90° Exit

Material and Finish:

Cable Clamp Housing—
Thermoplastic, gray

4-40 Mounting Screws—
Steel, zinc plated

4-40 Housing Screws & Hex Nuts
—Steel, zinc plated

Related Product Data:

Connectors used with:
HDE All-Plastic—pages 112 & 113
HDE Metal-Shell—pages 114 & 115
HDP Metal-Shell—pages 90-102

Other accessory capabilities:
Spring Latches (Two Piece)—
page 152

Technical Documents:

Instruction Sheet—408-7555

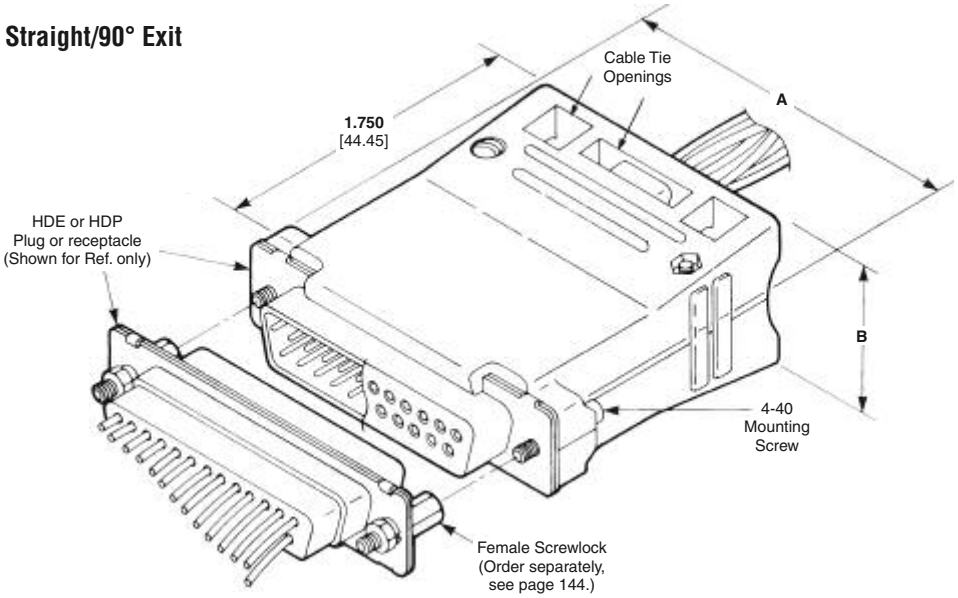

Shell Size	Dimensions		Cable Dia. (Max.)	Cable Clamp Kit No.
	A	B		Individual
2	**1.550** 39.37	**.826** 20.98	**.350** 8.89	5206471-1
3	**2.090** 53.09	**.826** 20.98	**.335** 8.51	5206472-1
			.460 11.68	5745134-1
4	**2.738** 69.55	**.826** 20.98	**.675** 17.15	5745081-1
5	**2.644** 67.16	**.938** 23.83	**.775** 19.69	5745082-1

Notes: 1. All parts are packaged unassembled.
2. Straight or 90° cable exit is achieved by inserting AMP-TY Cable Ties through cable tie openings and clamping the cable to one housing half only.

Note: All part numbers are RoHS compliant.

Catalog 82068
Revised 4-12

www.te.com

Dimensions are shown for reference purposes only. Specifications subject to change.

Dimensions are in inches and millimeters unless otherwise specified.
USA: +1 (800) 522-6752

Canada: +1 (905) 475-6222
Mexico/C. Am.: +52 (0) 55-1106-0800
Latin/S. Am.: +54 (0) 11-4733-2200
Germany: +49 (0) 6251-133-1999

UK: +44 (0) 800-267666
France: +33 (0) 1-3420-8686
Netherlands: +31 (0) 73-6246-999
China: +86 (0) 400-820-6015

Unshielded Cable Clamps (Continued)

One-Piece, All-Plastic Cable Clamp for Jacketed Cable, 180°/120° Exit (HDP and HDE) (Quik-Snap)

The TE Quik-Snap Backshell Kit is a one-piece, all-plastic cable clamp kit designed for use with either the AMPLIMITE HDP-20, HDP-22, or HDE, all-plastic or metal-shell connectors.

Kits are available for connector sizes 1, 2, 3, and 4 with a cable exit option of 180° or 120°.

Each kit contains:

- 1-Hinged, plastic clamp
- 2-Self-tapping screws
- 1-Strain relief clip
- 1-Cable exit gate plug (Used to close unused exit)

(For metal-shell connector applications an optional kit with 2 retainer clips and screws is available.)

Material and Finish:

Cover—Polypropylene, black
Strain Relief Clip—Stainless steel
Retainer Clip—Stainless steel
Screws—Carbon steel, zinc plated
Cable Gate—Polypropylene, Black

Related Product Data:

Connectors used with:
HDP Metal-Shell—pages 90-102
HDE All-Plastic—pages 112 & 113
HDE Metal-Shell—pages 114 & 115

Technical Documents:

Instruction Sheet—408-7837

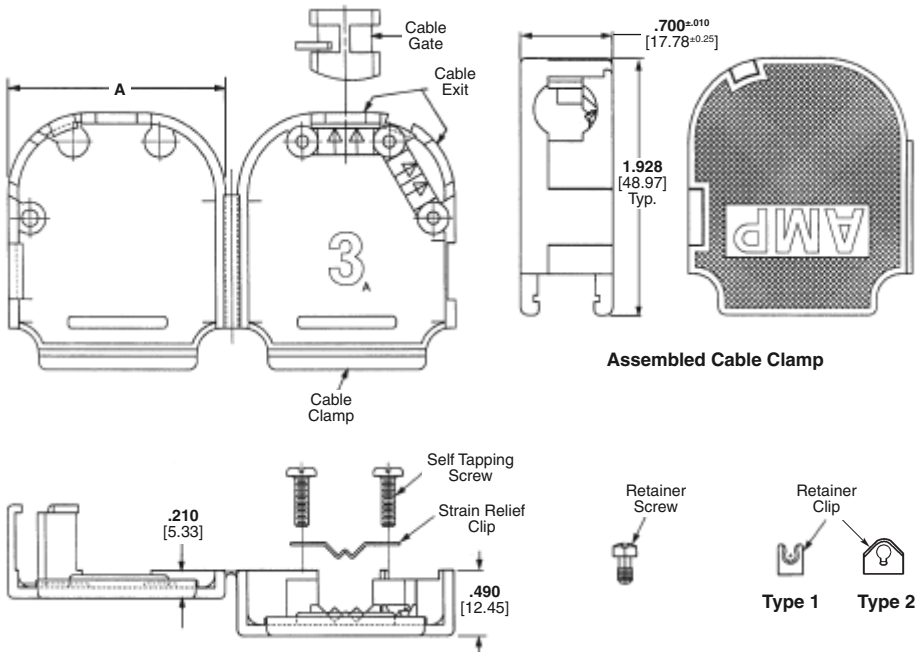

Shell Size	Cable Dia. Range (Ref.)	Dimension A	Kit Number* with Retainer Screws and Clips	Kit Number*** without Retainer Screws and Clips	Packaging
1	**.075-.250** 1.91-6.35	**.785** 19.94	5749914-1	—	Bulk Pkg.
			5749914-2	5750100-1	Unit Kit
			5749914-4**	—	
3	**.180-.460** 4.57-11.68	**1.650** 41.91	5749626-2	5750078-1	Unit Kit
4	**.250-.550** 6.35-13.97	**2.285** 58.04	5749916-2	—	Bulk Pkg.
			5749916-2	—	Unit Kit

*For metal-shell connectors only.
**Type 2 Retainer Clip
***For Metal-Shell or All-Plastic Connectors

Note: All part numbers are RoHS compliant.

Catalog 82068
Revised 4-12

www.te.com

Dimensions are shown for reference purposes only. Specifications subject to change.

Dimensions are in inches and millimeters unless otherwise specified.
USA: +1 (800) 522-6752

Canada: +1 (905) 475-6222
Mexico/C. Am.: +52 (0) 55-1106-0800
Latin/S. Am.: +54 (0) 11-4733-2200
Germany: +49 (0) 6251-133-1999

UK: +44 (0) 800-267666
France: +33 (0) 1-3420-8686
Netherlands: +31 (0) 73-6246-999
China: +86 (0) 400-820-6015

Unshielded Cable Connector and Clamp Kits

The AMPLIMITE Quik-Snap Backshell and Connector kit presents a complete package for your unshielded subminiature D connector needs. Kits are available for Shell Sizes 1, 2 and 3, and are packaged 25 and 100 kits per unit.

Each kit contains:

1-Hinged Plastic Clamp
2-Retention Screws
2-Retention Clips
1-Cable Gate Plug
1-Strain Relief Clip
2-Self Tapping Screws
1-Connector and Contacts

Material and Finish:

Cover—Polypropylene, black
Retention Screws—Steel, zinc plated
Retention Clips—Stainless steel
Cable Gate Plug—Polypropylene, Black
Strain Relief Clip—Stainless steel
Self Tapping Screws—Steel, zinc plated
Contacts—Brass (HDP Pins), Phosphor Bronze (All Others), plated gold flash on the mating end, .000100 [0.00254] min. tin or tin on the terminating end, all over .000030 [0.00076] min. nickel underplating
Housing—Polyester or nylon, glass-filled, UL rated 94V-0, black
Shell—Steel, plated .000200 [0.00508] min. tin over .000050 [0.00127] min. copper

Technical Documents:

HDE Connectors:
Instruction Sheets—
408-6621
Application Specifications—
114-40002
114-40003
HDP Connectors:
Application Specifications—
114-10000
114-40030
Cable Clamps:
Instruction Sheet—408-9544
Retainer Clips:
Instruction Sheet—408-7837

One-Piece, All-Plastic Cable Clamp for Jacketed Cable, 180°/120° Exit and HDP-20 and HDE-20 Connector

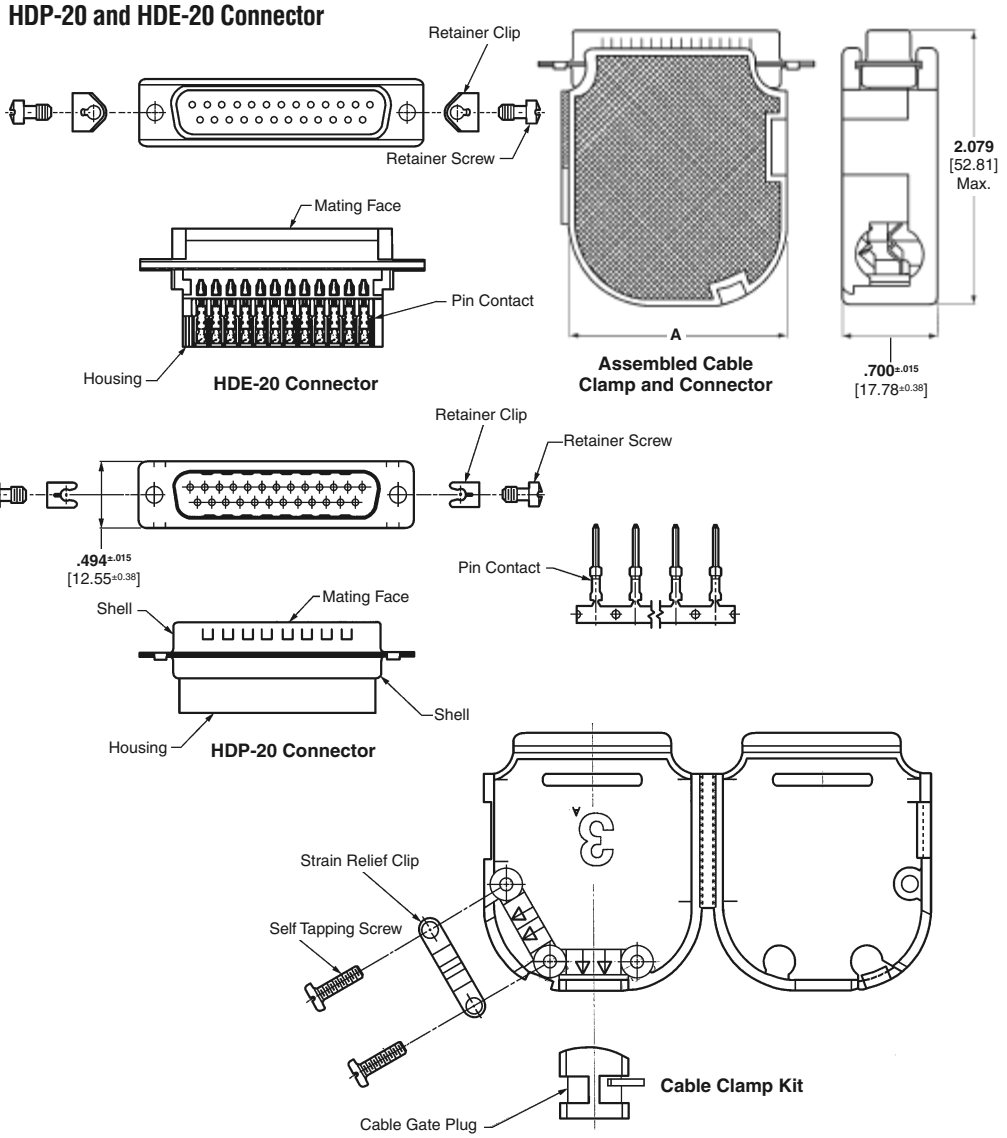

Unshielded Cable Clamp Kits with HDP-20 Connectors

Shell Size	Cable Dia. Range (Ref.)	Dimension A	Plug Kit Part No.	Receptacle Kit Part No.	Packaging
1	**.075-.250** 1.91-6.35	**.785** 19.94	749808-8	749812-7	100/pack
2	**.170-.380** 4.32-9.65	**1.110** 28.19	749808-9	—	100/pack
3	**.180-.460** 4.58-11.68	**1.650** 41.91	749808-7	1-749812-1	100/pack

Unshielded Cable Clamp Kits with HDE-20 All-Plastic Connectors

Shell Size	Cable Dia. Range (Ref.)	Dimension A	Plug Kit Part No.	Receptacle Kit Part No.	Packaging
3	**.180-.460** 4.58-11.68	**1.650** 41.91	749809-9	749813-8	100/pack

Note: All part numbers are RoHS compliant.

Catalog 82068
Revised 4-12

www.te.com

Dimensions are shown for reference purposes only. Specifications subject to change.

Dimensions are in inches and millimeters unless otherwise specified.
USA: +1 (800) 522-6752

Canada: +1 (905) 475-6222
Mexico/C. Am.: +52 (0) 55-1106-0800
Latin/S. Am.: +54 (0) 11-4733-2200
Germany: +49 (0) 6251-133-1999

UK: +44 (0) 800-267666
France: +33 (0) 1-3420-8686
Netherlands: +31 (0) 73-6246-999
China: +86 (0) 400-820-6015

Unshielded Cable Clamps

Low Profile Cable Clamps feature a two-piece construction which allows the two cover halves to be snapped together, no hardware is required for assembly. They can be used on plugs or receptacles and will not interfere with commonly used mating hardware. Sufficient Cable Support Gates (or a Cable Support Gate Latch) are supplied with each cable clamp kit to achieve adjustable clamping over a wide range of jacketed cable diameters.

Material

Black thermoplastic

Related Product Data:

Connectors used with:
HDE All-Plastic—pages 112 & 113
HDE Metal-Shell—pages 114 & 115

Other accessory capabilities:
Male Screw Retainers—pages 146 & 147
Female Screwlocks—page 148
Locking Posts and Slide Latches—pages 149-151
Latching Blocks—pages 153 & 154

Straight Exit Low Profile for Jacketed Cable

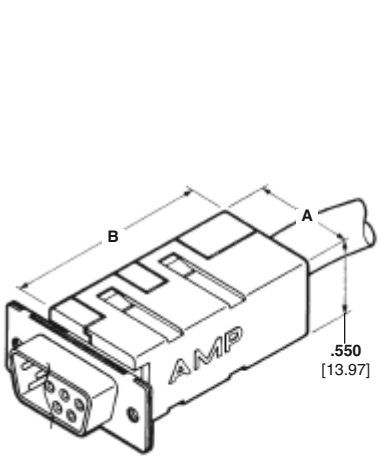

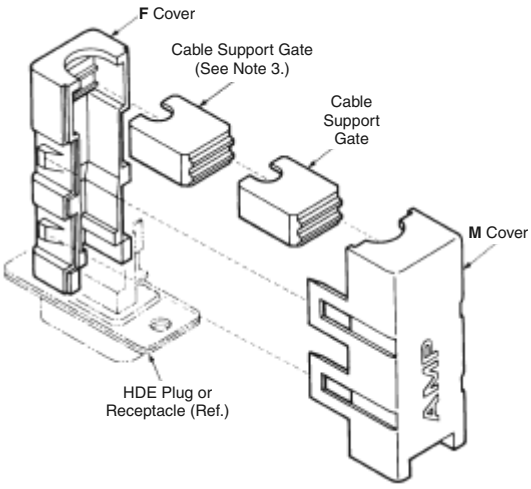

Shell Size	Dimensions			Cable Dia. (Max.)	Cable Clamp Kit No.	
	A	B				
		When used On Plug	When used on Receptacle		Individual	Bulk Packed*
1	**.732** 18.59	**1.582** 40.18	**1.533** 38.94	**.330** 8.38	745547-1	745547-2
2	**1.056** 26.82	**1.582** 40.18	**1.533** 38.94	**.425** 10.80	745553-1	745553-2
3	**1.604** 40.74	**1.700** 43.18	**1.651** 41.94	**.550** 13.97	745560-1	745560-2

*Each part is individually bulk packed for multiple kit orders.

Notes: 1. All parts are packaged unassembled.
2. Each kit is comprised of two cover halves (F and M) and an assortment of cable support gates.
3. Cable support gate must be used as shown for small diameter cable.

90° Exit Low Profile for Jacketed Cable

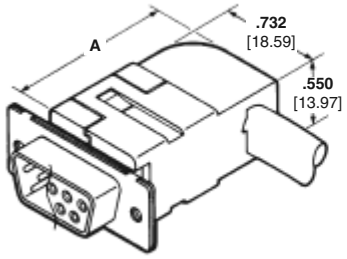

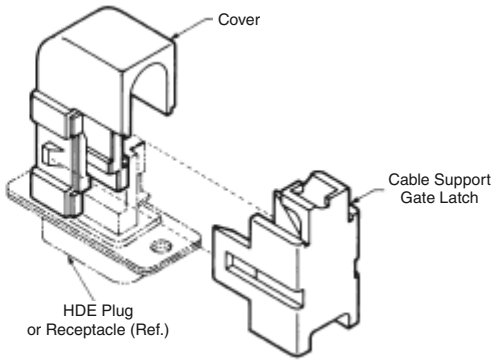

Shell Size	Dimension A		Cable Dia. (Max.)	Cable Clamp Kit No.
	When used on Plug	When used on Receptacle		Individual
1	**1.290** 32.77	**1.241** 31.52	**.330** 8.38	745550-1

Notes: 1. All parts are packaged unassembled.
2. Each kit is comprised of a cover half and an assortment of cable support gate latches.

Note: All part numbers are RoHS compliant.

Catalog 82068
Revised 4-12

www.te.com

Dimensions are shown for reference purposes only. Specifications subject to change.

Dimensions are in inches and millimeters unless otherwise specified.
USA: +1 (800) 522-6752

Canada: +1 (905) 475-6222
Mexico/C. Am.: +52 (0) 55-1106-0800
Latin/S. Am.: +54 (0) 11-4733-2200
Germany: +49 (0) 6251-133-1999

UK: +44 (0) 800-267666
France: +33 (0) 1-3420-8686
Netherlands: +31 (0) 73-6246-999
China: +86 (0) 400-820-6015

Unshielded Cable Clamps (Continued)

Material

Black thermoplastic

Related Product Data:

Connectors used with:
HDE All-Plastic—pages 112 & 113
HDE Metal-Shell—pages 114 & 115
Other accessory capabilities:
RFI/EMI Metal Shields—pages 141 & 142
Male Screw Retainers—pages 146 & 147
Locking Posts and Slide Latches—pages 149-151
Latching Blocks—pages 153 & 154

Technical Documents:

Instruction Sheet—408-6658

Slide-On Back Covers

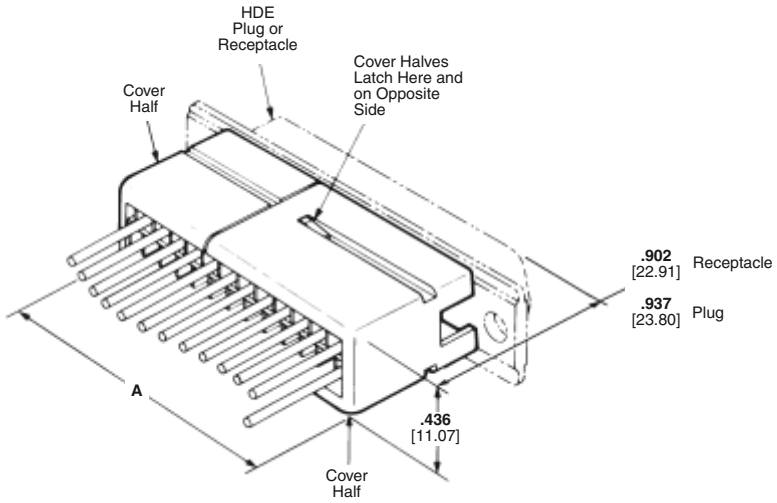

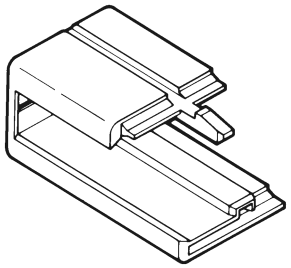

Back Cover Half
(See Note 2.)

Shell Size	Dim. A	Back Cover Kit No. Individual
1	**.610** 15.49	745530-1
2	**.934** 23.72	745530-2
3	**1.482** 37.64	745530-3
4	**2.134** 54.20	745530-4

Notes: 1. All parts are packaged unassembled.
2. Each slide-on back cover kit includes two identical cover halves which snap together over the connector.

Note: All part numbers are RoHS compliant.

Catalog 82068
Revised 4-12

www.te.com

Dimensions are shown for reference purposes only. Specifications subject to change.

Dimensions are in inches and millimeters unless otherwise specified.
USA: +1 (800) 522-6752

Canada: +1 (905) 475-6222
Mexico/C. Am.: +52 (0) 55-1106-0800
Latin/S. Am.: +54 (0) 11-4733-2200
Germany: +49 (0) 6251-133-1999

UK: +44 (0) 800-267666
France: +33 (0) 1-3420-8686
Netherlands: +31 (0) 73-6246-999
China: +86 (0) 400-820-6015

Unshielded Cable Clamps (Continued)

Box and Lid Cable Clamps can be used on either plugs or receptacles and will not interfere with commonly used hardware. Their hinged construction allows easy assembly to a harness. A wide range of cable diameters are accommodated through the use of cable support gates, supplied with each cable clamp.

Cable clamps are available in kits with appropriate hardware for convenient plug/receptacle mating. See below for kits with Male Screw Retainers.

Material and Finish:

Cable Clamp Housing—Thermoplastic, black with textured finish

Gates—Thermoplastic, black

Flat Head Screws—Steel, black, zinc plated

Related Product Data:

Connectors used with:
HDP Metal-Shell—pages 90-102

Other accessory capabilities:
Male Screw Retainers—pages 146 & 147

Female Screwlocks—page 148

Locking Posts and Slide Latches—pages 149-151

Spring Latches (Two Piece)—page 152

Latching Blocks—pages 153 & 154

Technical Documents:

Instruction Sheet—408-7555

Material and Finish:

Cable Clamp Housing—Thermoplastic, black with textured finish

Gates—Thermoplastic, black

Flat Head Screws—Steel, black, zinc plated

Male Screw—Steel, zinc plated yellow chromate

Retaining Clip—Stainless steel

Related Product Data:

Connectors used with:
HDP Metal-Shell—pages 90-102

Technical Documents::

Instruction Sheets—
408-7555
408-7837

Box and Lid Straight/90° Exit

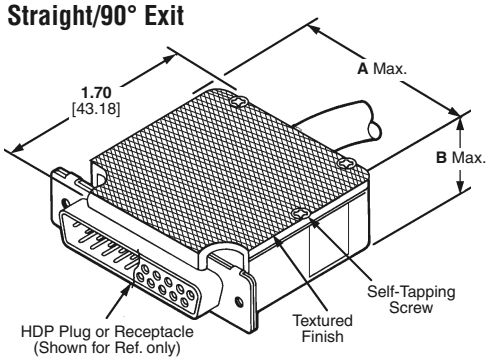

Shell Size 1 & 2

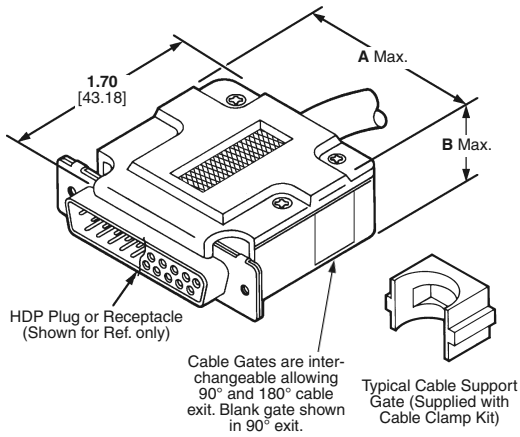

Shell Size 3 & 4 & 5

Shell Size	Dimensions A	Dimensions B	Cable Dia. Max. (Ref.) Straight Cable Exit	Cable Dia. Max. (Ref.) 90° Cable Exit	Cable Clamp Kit No. Individual	Cable Clamp Kit No. Bulk Packed*
1	**.755** 19.18	**.630** 16.00	**.160** 4.06	**.160** 4.06	207467-1	207467-2
2	**1.078** 27.38	**.630** 16.00	**.320** 8.13	**.320** 8.13	207470-1	—
3	**1.620** 41.15	**.770** 19.56	**.390** 9.91	**.390** 9.91	207345-1	207345-2
4	**2.268** 57.61	**.770** 19.56	**.640** 16.26	**.405** 10.29	207473-1	207473-2
5	**2.178** 55.32	**.880** 22.35	**.490** 12.45	**.490** 12.45	207476-1	—

*Each part is individually bulk packed for multiple kit orders.

Notes: 1. All parts are packaged unassembled.
2. Cable diameter is adjustable by changing cable support gates. Use the flat side of cable support gates for discrete wire, and the semicircle side for jacketed cable.
3. Cable clamp assemblies are available in kits with male screw retainers, see below.

Box and Lid Straight/90° Exit Cable Clamp Kits with Male Screw Retainers

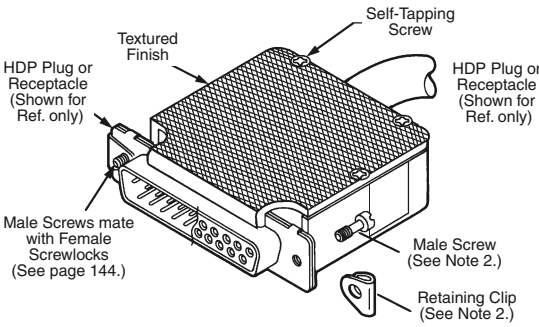

Shell Size 1 & 2

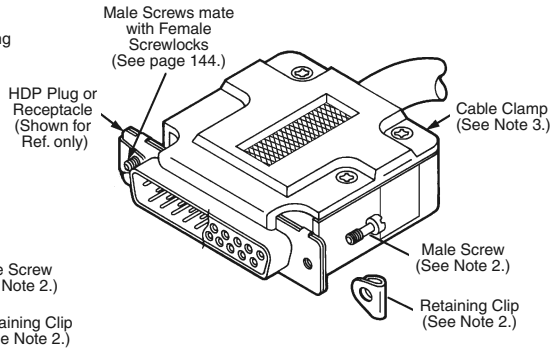

Shell Size 3 & 4 & 5

Shell Size	Cable Clamp Kit No.
1	5207908-1
2	5207908-4
3	5207908-7
4	1-5207908-0
5	1-5207908-3

Notes: 1. All parts are packaged unassembled.
2. Each kit is comprised of a cable clamp and male screw retainer hardware(2 each). Male screw retainers are also available in kit form, see page 146.
3. For ordering cable clamps separately, see above.

Note: All part numbers are RoHS compliant.

Catalog 82068
Revised 4-12

www.te.com

Dimensions are shown for reference purposes only. Specifications subject to change.

Dimensions are in inches and millimeters unless otherwise specified.
USA: +1 (800) 522-6752

Canada: +1 (905) 475-6222
Mexico/C. Am.: +52 (0) 55-1106-0800
Latin/S. Am.: +54 (0) 11-4733-2200
Germany: +49 (0) 6251-133-1999

UK: +44 (0) 800-267666
France: +33 (0) 1-3420-8686
Netherlands: +31 (0) 73-6246-999
China: +86 (0) 400-820-6015

Unshielded Cable Clamps (Continued)

Straight/45° Exit Cable Clamps can be used on either a plug or receptacle and will not interfere with commonly used hardware, such as Male Screw Retainers, Female Screw-locks or Spring Latches and Latching Blocks. Their hinged construction allows easy assembly to a harness. Also, the straight or 45° angle of the cable exit is achieved by merely positioning the Cable Support Gate for the desired angle prior to installing the assembly onto the plug or receptacle. Adjustable screws are used to tighten cable strain reliefs.

Cable Clamp assemblies are available in kits with appropriate hardware for convenient plug/receptacle mating.

Material and Finish:

Cable Clamp Housing—Thermoplastic, black with textured finish

Gates—Thermoplastic, black

Pan Head Screws, 6-32 Set Screw and 6-32 Square Nut—Steel, zinc plated (sizes 1 and 2 include self-tapping screws only)

Related Product Data:

Connectors used with:

HDP Metal-Shell—pages 90-102

Other accessory capabilities:

Male Screw Retainers—pages 146 & 147

Female Screwlocks—page 148

Locking Posts and Slide Latches—pages 149-151

Spring Latches (Two Piece)—page 152

Latching Blocks—pages 153 & 154

Technical Documents:

Instruction Sheet—408-7555

Material and Finish:

Cable Clamp Housing—Thermoplastic, black with textured finish

Gates—Thermoplastic, black

Pan Head Screws, 6-32 Set Screw and 6-32 Square Nut—Steel, zinc plated (sizes 1 and 2 include self-tapping screws only)

Male Screw—Steel, zinc plated yellow chromate

Retaining Clip—Stainless steel

Related Product Data:

Connectors used with:

HDP Metal-Shell—pages 90-102

Technical Documents:

Instruction Sheets—
408-7555
408-7837

Note: All part numbers are RoHS compliant.

Clam Shell Straight/45° Exit

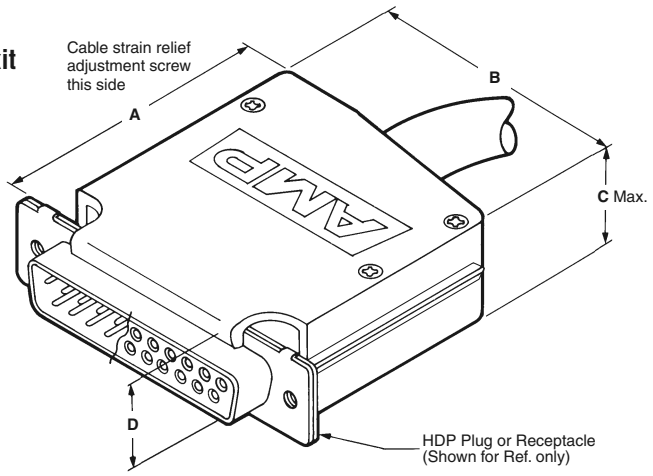

Shell Size	Dimensions				Cable Dia. (Max.)	Short Cable Clamp Part No.		Standard Cable Clamp Part No.	
	A	B	C	D		Individual	Bulk Packed*	Individual	Bulk Packed*
1	**1.625** 41.28	**.750** 19.05	**.640** 16.26	**.640** 16.26	**.256** 6.30	—	—	5205729-1	5205729-3
2	**1.250** 31.75	**1.073** 27.25	**.600** 15.24	**.640** 16.26	**.320** 8.13	5206393-1	—	—	—
	1.625 41.28	**1.073** 27.25	**.640** 16.26	**.640** 16.26	**.320** 8.13	—	—	5205730-1	5205730-3
3	**1.250** 31.75	**1.615** 41.02	**.600** 15.24	**.640** 16.26	**.420** 10.67	5206390-1	5206390-3	—	—
	1.625 41.28	**1.615** 41.02	**.640** 16.26	**.640** 16.26	**.420** 10.67	—	—	5205718-1	5205718-4
4	**1.625** 41.28	**2.263** 57.48	**.640** 16.26	**.640** 16.26	**.490** 12.45	—	—	5205731-1	—

*Each part is individually bulk packed for multiple assembly orders.

Notes: 1. All parts are packed unassembled.
2. Quantity of pan head screws supplied with cable clamp assembly varies with shell size.
3. Cable clamps are available in kits with male screw retainers, see below.
4. All pan head screws have combination cross-recessed and slotted heads.

Clam Shell Straight/45° Exit Cable Clamp Kits with Male Screw Retainers

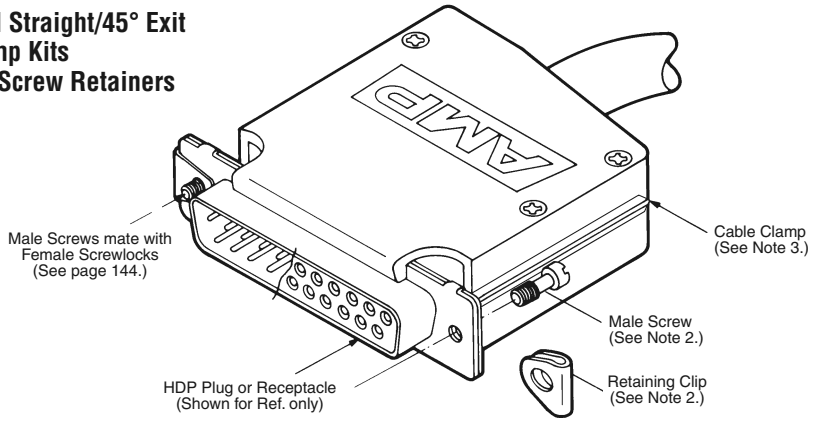

Shell Size	Short Cable Clamp Kit No.		Standard Cable Clamp Kit No.	
	Individual	Bulk Packed*	Individual	Bulk Packed*
1	—	—	5206478-1	—
2	—	—	5206478-2	—
3	1-5206478-2	2-5206478-6	5206478-3	2-5206478-2
4	—	—	5206478-4	—
5	—	—	5206478-5	—

*Each part is individually bulk packed for multiple assembly orders.

Notes: 1. All parts are packaged unassembled.
2. Each kit is comprised of a cable clamp and male screw retainer hardware (2 each). Male screw retainers are also available in kit form, see page 146.
3. For ordering cable clamps separately, see above.

Catalog 82068
Revised 4-12

www.te.com

Dimensions are shown for reference purposes only. Specifications subject to change.

Dimensions are in inches and millimeters unless otherwise specified.
USA: +1 (800) 522-6752

Canada: +1 (905) 475-6222
Mexico/C. Am.: +52 (0) 55-1106-0800
Latin/S. Am.: +54 (0) 11-4733-2200
Germany: +49 (0) 6251-133-1999

UK: +44 (0) 800-267666
France: +33 (0) 1-3420-8686
Netherlands: +31 (0) 73-6246-999
China: +86 (0) 400-820-6015

Unshielded Cable Clamps (Continued)

Material and Finish:

Cable Clamp Housing—Nylon, black
4-40 Fillister Head Screws & Hex Nuts—Steel, clear zinc plated
Jackscrews—Steel, black zinc plated

Related Product Data:

Connectors used with:
HDP Metal-Shell—pages 90-102

Straight Exit Dataphone

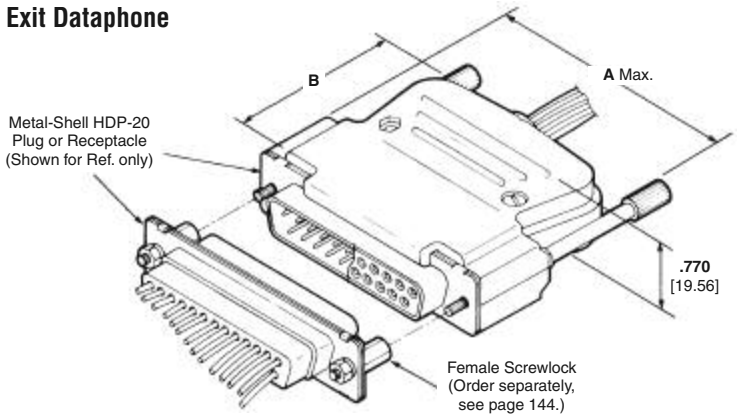

Shell Size	Dimensions A	Dimensions B	Max. Cable Dia. (without Gate)	Max. Cable Dia. (with Gate)	Cable Gate Identification*	Thread Size	Cable Clamp Kit No.
2	**1.575** 40.01	**1.312** 33.32	**.400** 10.16	**.200** 5.08	2A	4-40	5745122-2
				.260 6.60	2B		
				.320 8.13	2C		
3	**2.115** 53.72	**1.421** 36.09	**.500** 12.70	**.250** 6.35	3A	4-40	5745121-2
				.340 8.64	3B		
				.420 10.67	3C		

*Molded-in identification (as shown in chart above) is provided on cable support gates to facilitate proper selection with regard to shell size and maximum acceptable cable diameter.

Notes: 1. All parts are packaged unassembled.
2. Cable diameter is adjustable by changing cable support gates.

Straight Exit for Jacketed Cable (Two-Piece)

This cable clamp allows cable to be fully prepared and terminated to the connector before the clamp is installed.

Material and Finish:

Cable Clamps—ABS black
4-40 Fillister Head Screws and Hex Nuts—Steel, zinc plated
4-40 Mounting Screws—Steel, zinc plated
Jackscrews—Stainless steel, passivated

Related Product Data:

Ferrules—pages 143-145
Connectors used with:
HDE Metal-Shell—pages 114 & 115
HDP Metal-Shell—pages 90-102
Other accessory capabilities:
Spring Latch (Two-Piece)—page 152

Technical Documents:

Instruction Sheet—408-6609

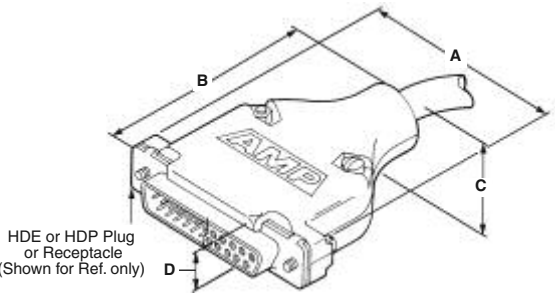

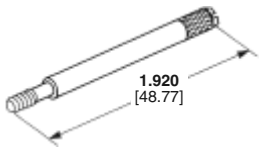

4-40 Male Jackscrew Kit Nos.:
747784-8 (bulk packed)*†
*Each part is individually bulk packed for multiple kit orders.
†Slotted for screwdriver use.

Cable Clamp Kits with Grommets

Shell Size	Dimensions A	Dimensions B	Dimensions C	Dimensions D	Cable O.D. Range	No. of Grommets Per Set	Kit Numbers
1	**1.215** 30.86	**1.910** 48.51	**.570** 14.48	**.630** 16.00	**.185-.320** 4.70-8.13	4	5748678-1
2	**1.545** 39.24	**1.910** 48.51	**.620** 15.75	**.620** 15.75	**.185-.320** 4.70-8.13	4	5748678-2
3	**2.090** 53.09	**1.920** 48.77	**.680** 17.27	**.640** 16.26	**.255-.470** 6.48-11.94	6	5748678-3
4	**2.738** 69.55	**1.920** 48.77	**.800** 20.32	**.620** 15.75	**.255-.470** 6.48-11.94	6	5748678-4
5	**2.644** 67.16	**1.920** 48.77	**.900** 22.86	**.730** 18.54	**.255-.470** 6.48-11.94	6	5748678-5

Notes: 1. All parts are packaged unassembled.
2. Jackscrews must be purchased separately.
3. Split-ring and crimp ferrules are shown on pages 143-145.
4. Shielded cable clamps will not accept connector housings with clinch nuts.

Note: All part numbers are RoHS compliant.

Catalog 82068
Revised 4-12

www.te.com

Dimensions are shown for reference purposes only. Specifications subject to change.

Dimensions are in inches and millimeters unless otherwise specified.
USA: +1 (800) 522-6752

Canada: +1 (905) 475-6222
Mexico/C. Am.: +52 (0) 55-1106-0800
Latin/S. Am.: +54 (0) 11-4733-2200
Germany: +49 (0) 6251-133-1999

UK: +44 (0) 800-267666
France: +33 (0) 1-3420-8686
Netherlands: +31 (0) 73-6246-999
China: +86 (0) 400-820-6015

Unshielded Cable Clamps (Continued)

Straight/90° Exit

Straight/90° Exit Cable Clamps can be used on a plug or receptacle and will not interfere with commonly used mating hardware. Their three-piece construction allows easy assembly to a cable harness. Also, the same cable clamp components are used for both straight and 90° cable exit applications. This is accomplished by simply positioning the Male and Female Panels on the Yoke for the desired angle.

Material

Black thermoplastic

Related Product Data:

Connectors used with:
HDE All-Plastic—pages 112 & 113
HDE Metal-Shell—pages 114 & 115
HDP Metal-Shell—pages 90-102

Other accessory capabilities:
Female Screwlocks—page 148
Locking Posts and Slide Latches—pages 149-151
Latching Blocks—pages 153 & 154

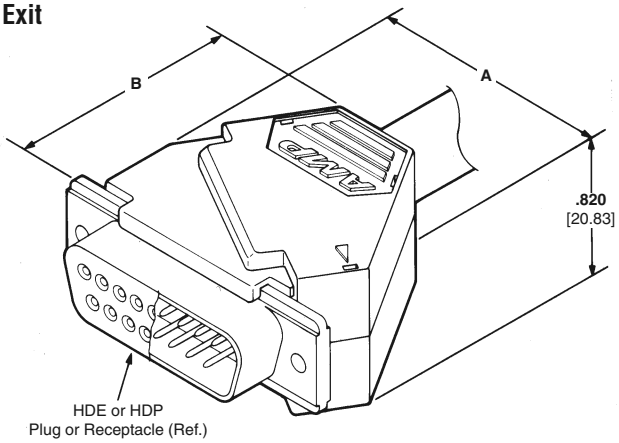

Straight Cable Exit Application

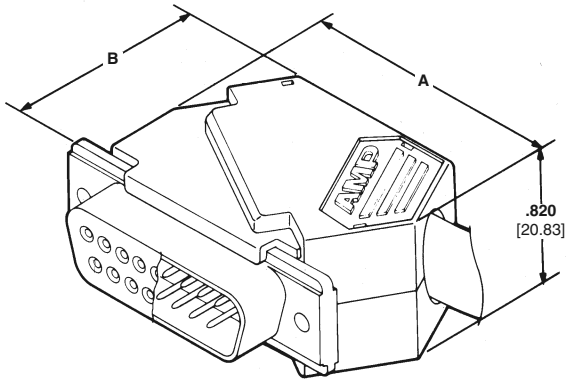

90° Cable Exit Application

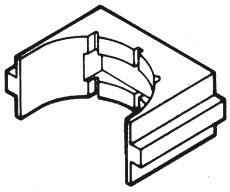

Typical Cable Support Gate
(Supplied with Cable Clamp Kit)

Shell Size	Cable Clamp Configuration	Dimensions A	Dimensions B	Cable Dia.	Cable Clamp Kit No. Individual
3	Straight Exit	1.906	1.672	.550	745306-1
	90° Exit	2.066	1.396		
4	Straight Exit	2.424	1.820	.750	745311-1
	90° Exit	2.638	1.596		

Notes: 1. All parts are packaged unassembled.
2. Each cable clamp assembly includes a yoke, male panel, female panel and four cable support gates. The cable diameter is adjustable by changing the cable support gates.

Note: All part numbers are RoHS compliant.

Catalog 82068
Revised 4-12

www.te.com

Dimensions are shown for reference purposes only. Specifications subject to change.

Dimensions are in inches and millimeters unless otherwise specified.
USA: +1 (800) 522-6752

Canada: +1 (905) 475-6222
Mexico/C. Am.: +52 (0) 55-1106-0800
Latin/S. Am.: +54 (0) 11-4733-2200
Germany: +49 (0) 6251-133-1999

UK: +44 (0) 800-267666
France: +33 (0) 1-3420-8686
Netherlands: +31 (0) 73-6246-999
China: +86 (0) 400-820-6015

Shielded Cable Clamps

Straight Exit RFI/EMI Shields for Jacketed Cable (Two-Piece)

This RFI/EMI shield allows cable to be fully prepared and terminated to the connector before the shield is installed. During installation, the shield of the jacketed cable is folded back and compressed into the cable opening of the RFI/EMI shield. For greater cable support and/or shielding effectiveness, split-ring and crimp ferrules are available (pages 143-145).

Material and Finish:

Die Cast Shield—Zinc alloy, plated bright nickel over bright copper

Metal-Plated Plastic Shield—Thermoplastic, plated nickel over copper

4-40 Fillister Head Screws and Hex Nuts—Steel, zinc plated

4-40 Mounting Screws—Steel, zinc plated

Jackscrews—Stainless steel, passivated

Related Product Data:

Ferrules—pages 143-145

Connectors used with:
HDE Metal-Shell—pages 114 & 115
HDP Metal-Shell (Tin plated only)—pages 90-102

Other accessory capabilities:
Spring Latch (Two-Piece)—page 152

Technical Documents:

Product Specification—108-40032

Instruction Sheet—408-6609

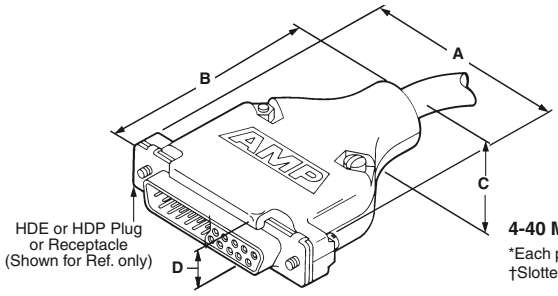

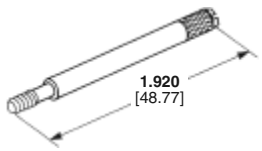

4-40 Male Jackscrew Kit Nos.: 747784-8 (bulk packed)*†

*Each part is individually bulk packed for multiple kit orders.
†Slotted for screwdriver use.

Shell Size	Dimensions A	B	C	D	Cable O.D. (Max.)	Die Cast Shield Kit Numbers	Metal-Plated Plastic Shield Kit Numbers	Grommet Sets: Cable O.D. Range	No. of Grommets Per Set	Part Number
1	**1.215** 30.86	**1.910** 48.51	**.550**** 13.97	**.620**** 15.75	**.200** 5.08	5745171-2	5745854-5	—	—	—
					.250 6.35	5745171-1	5745854-3	—	—	—
					.370 9.40	5745171-5	5745854-1	**.185-.320** 4.70-8.13	4	747746-1
2	**1.545** 39.24	**1.910** 48.51	**.620** 15.75	**.620** 15.75	**.225** 5.72	5745172-3	5747099-7	—	—	—
					.300 7.62	5745172-2	5747099-5	—	—	—
					.375 9.53	5745172-1	5747099-3	**.185-.320** 4.70-8.13	4	747746-1
					.430 10.92	1-5745172-3	5747099-1	—	—	—
3	**2.090** 53.09	**1.920** 48.77	**.680** 17.27	**.620**** 15.75	**.280** 7.11	5745173-5	5745833-9	—	—	—
					.350 8.89	5745173-4	5745833-7	—	—	—
					.430 10.92	5745173-3	5745833-5	—	—	—
					.480 12.19	5745173-2	5745833-4	—	—	—
					.530 13.46	5745173-1	5745833-1	**.255-.470** 6.48-11.94	6	747973-1
4	**2.738** 69.55	**1.920** 48.77	**.800** 20.32	**.620** 15.75	**.350** 8.89	5745174-5	5747100-9	—	—	—
					.425 10.80	5745174-4	5747100-7	—	—	—
					.500 12.70	5745174-3	—	—	—	—
					.530 13.46	2-5745174-7	—	**.255-.470** 6.48-11.94	6	747973-1
					.575 14.61	5745174-2	5747100-3	—	—	—
					.650 16.51	5745174-1	5747100-1	—	—	—
5	**2.644** 67.16	**1.920** 48.77	**.900** 22.86	**.730** 18.55	**.375** 9.53	5745175-6	—	—	—	—
					.450 11.43	5745175-5	—	—	—	—
					.525 13.34	5745175-4	—	**.255-.470** 6.48-11.94	6	747973-1
					.600 15.24	5745175-3	—	—	—	—
					.675 17.15	5745175-2	—	—	—	—
					.750 19.05	5745175-1	5747098-1	—	—	—

Cable Clamp Kits with Grommets

Shell Size	Dimensions A	B	C	D	Cable O.D. Range	No. of Grommets Per Set	Kit Numbers: Die Cast Shield With Grommets	Metal-Plated Plastic Shield With Grommets
1	**1.215** 30.86	**1.910** 48.51	**.550**** 13.97	**.620**** 15.75	**.185-.320** 4.70-8.13	4	5748676-1	5748677-1
2	**1.545** 39.24	**1.910** 48.51	**.620** 15.75	**.620** 15.75	**.185-.320** 4.70-8.13	4	5748676-2	5748677-2
3	**2.090** 53.09	**1.920** 48.77	**.680** 17.27	**.620**** 15.75	**.255-.470** 6.48-11.94	6	5748676-3	5748677-3
4	**2.738** 69.55	**1.920** 48.77	**.800** 20.32	**.620** 15.75	**.255-.470** 6.48-11.94	6	5748676-4	5748677-4
5	**2.644** 67.16	**1.920** 48.77	**.900** 22.86	**.730** 18.54	**.255-.470** 6.48-11.94	6	5748676-5	5748677-5

Notes: 1. All parts are packaged unassembled.
2. Jackscrews must be purchased separately.
3. Split-ring and crimp ferrules are shown on pages 143-145.
4. Shielded cable clamps will not accept connector housings with clinch nuts.

** The following dimensions apply to metal-plated plastic cable clamps: Size 1: C=**.570** [14.48], D=**.630** [16.0] Size 3: D=**.640** [16.26]

Note: All part numbers are RoHS compliant.

Catalog 82068
Revised 4-12

www.te.com

Dimensions are shown for reference purposes only. Specifications subject to change.

Dimensions are in inches and millimeters unless otherwise specified.
USA: +1 (800) 522-6752

Canada: +1 (905) 475-6222
Mexico/C. Am.: +52 (0) 55-1106-0800
Latin/S. Am.: +54 (0) 11-4733-2200
Germany: +49 (0) 6251-133-1999

UK: +44 (0) 800-267666
France: +33 (0) 1-3420-8686
Netherlands: +31 (0) 73-6246-999
China: +86 (0) 400-820-6015

Shielded Cable Clamps (Continued)

Both the straight exit and the 90° exit die cast RFI/EMI shield allows cable to be fully prepared and terminated to the connector before the shield is installed. During installation, the shield of the jacketed cable is folded back and compressed into the cable opening of the RFI/EMI shield. For greater cable support and/or shielding effectiveness, split-ring and crimp ferrules are available (pages 143-145).

Material and Finish:

Shield—Zinc alloy, plated nickel over copper

4-40 Pan Head Screws & Latch Screws (90° Exit Only)—Steel, zinc plated

One-Piece Slide Latch (90° Exit Only)—Stainless steel

Related Product Data:

Ferrules—pages 143-145

Connectors used with:
HDE Metal-Shell—pages 114 & 115
HDP Metal-Shell (Tin plated only)—pages 90-102

Technical Documents:

Product Specification—108-40032

Instruction Sheet—408-6769

Straight Exit RFI/EMI Die Cast Shield for Jacketed Cable (Two-Piece)

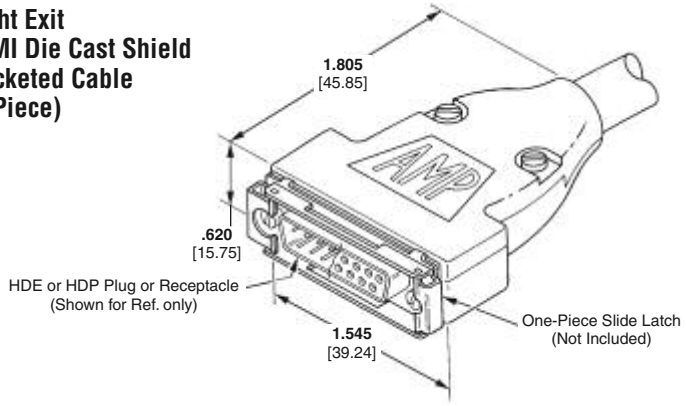

Shell Size	No. of Positions	ID Letter	Cable Dia. w/Ferrules	Part Number	Grommet Kit
2	15	E	**.260-.300** 6.60-7.72	5745919-3	—
		H	**.190-.375** 4.83-9.53	5745919-2	747746-1*
		K	**.190-.430** 4.83-10.92	5745919-1	—

*Cable Dia. Range using Grommet is .185-.320 [4.70-8.13].

Notes: 1. All parts packaged unassembled.
2. Each kit comprised of a two-piece shield with 2 pan head screws.
3. Split-ring and crimp ferrules are shown on pages 143-145.

90° Exit RFI/EMI Die Cast Shields for Jacketed Cable (Two-Piece)

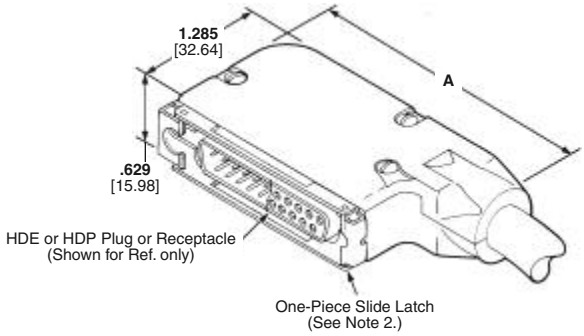

Shell Size	Dimension A	Cable Dia. w/Ferrules	Shield with Slide Latch Kit Numbers (See Note 2)	Shield without Slide Latch Kit Numbers (See Note 3)	Grommet Kit
2	**2.310** 58.67	**.185-.225** 4.70-6.48	5745652-4	—	—
		.260-.300 6.60-7.62	5745652-3	—	—
		.190-.375 4.83-9.53	5745652-2*	—	747746-1
		.190-.430 4.83-10.92	5745652-1	—	—
3	**2.850** 72.39	**.240-.280** 6.10-7.11	5745653-5	—	—
		.315-.355 8.00-9.02	5745653-4	—	—
		.190-.430 4.83-10.92	5745653-3	5747194-3	—
		.440-.480 11.18-12.19	5745653-2	—	—
		.380-.530 9.65-13.46	5745653-1*	—	747973-1

* Cable Dia. with Grommet Kit: Size 2 = .185-.320 [4.70-8.13]; Size 3 = .255-.470 [6.48-11.94].

Notes: 1. All parts are packaged unassembled.
2. Each kit is comprised of a two-piece shield with three pan head screws and a slide latch with two 4-40 slide latch screws.
3. Each kit is comprised of a two-piece shield with three pan head screws.
4. Split-ring and crimp ferrules are shown on pages 143-145.

Note: All part numbers are RoHS compliant.

Catalog 82068
Revised 4-12

www.te.com

Dimensions are shown for reference purposes only. Specifications subject to change.

Dimensions are in inches and millimeters unless otherwise specified.
USA: +1 (800) 522-6752

Canada: +1 (905) 475-6222
Mexico/C. Am.: +52 (0) 55-1106-0800
Latin/S. Am.: +54 (0) 11-4733-2200
Germany: +49 (0) 6251-133-1999

UK: +44 (0) 800-267666
France: +33 (0) 1-3420-8686
Netherlands: +31 (0) 73-6246-999
China: +86 (0) 400-820-6015

Shielded Cable Clamps (Continued)

Material and Finish:

Outer Ferrule—Copper, plated .000100 [0.00254] min. tin

Inner Ferrule—.023 [0.58] thick brass, plated .000050 [0.00127] tin over copper

Related Product Data:

Shields used with:
Straight Exit—pages 141 & 142
90° Exit—page 142

Technical Documents:

Product Specification—108-40032

Instruction Sheets—
408-9315 Hand Tool
408-9318 Die Sets

Crimp Ferrules for Braided Cable Shield (See pages 144 & 145 for Inner and Outer Ferrule Part Numbers.)

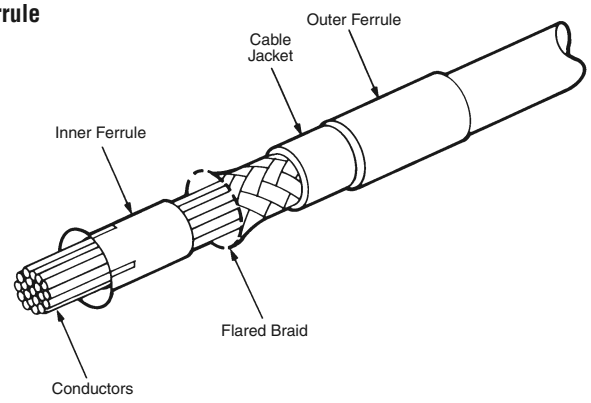

Application Tooling

Note: Crimp ferrules are for use with braided shields only. Crimp ferrules require application tooling with die sets for attachment to cable.

Pneumatic Bench Tool No. 312522-2 (Requires Die Set Holder No. 58449-1.)

AMP Hand Tool No. 543344-1
(See pages 144 & 145 for Hand Tool Die Set Numbers)

Split-Ring Ferrules for Foil or Braided Cable Shield (See pages 144 & 145 for Split-Ring Ferrule Part Numbers.)

Material:

Aluminum

Related Product Data:

Shields used with:
Straight Exit—pages 141 & 142
90° Exit—page 142

Technical Document

Product Specification—108-40032

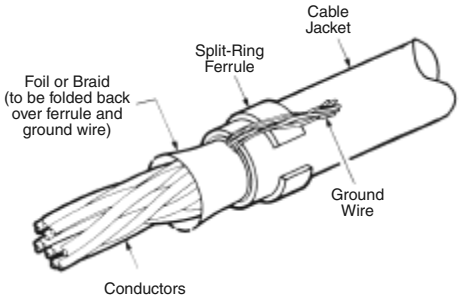

Note: Split-ring ferrules cannot be used with outer and inner ferrules. Split-ring ferrules are suitable for both foil and braided shields. The ferrules do not require tooling for assembly.

Note: All part numbers are RoHS compliant.

Catalog 82068
Revised 4-12

www.te.com

Dimensions are shown for reference purposes only. Specifications subject to change.

Dimensions are in inches and millimeters unless otherwise specified.
USA: +1 (800) 522-6752

Canada: +1 (905) 475-6222
Mexico/C. Am.: +52 (0) 55-1106-0800
Latin/S. Am.: +54 (0) 11-4733-2200
Germany: +49 (0) 6251-133-1999

UK: +44 (0) 800-267666
France: +33 (0) 1-3420-8686
Netherlands: +31 (0) 73-6246-999
China: +86 (0) 400-820-6015

Shielded Cable Clamps (Continued)

Crimp and Split-Ring Ferrules

Shell Size	Cable Dia. (Max.)	When using these Shield Kits: Straight Exit Shield Kit No. Die Cast	Straight Exit Shield Kit No. Metal-Plated Plastic	90° Exit Die Cast Shield Kit No. With Slide Latch	90° Exit Die Cast Shield Kit No. Without Slide Latch	Use these Ferrules: Split-Ring* Ferrule No.	Crimp Ferrule No. and Tooling No.** Inner	Outer	Die Set For Hand Tool 543344-1	Applicator Die Set
1	.200 5.08	5745171-2	5745854-5	—	—	745508-2	—	—	—	—
	.240 6.10	5745171-5	5745854-1	—	—	—	7-745129-8	3-745130-8	543013-2	813809-1
	.250 6.35	5745171-1	5745854-3	—	—	745508-3	—	—	—	—
	.280 7.11	5745171-5	5745854-1	—	—	—	7-745129-9	4-745130-5	1-543013-7	813809-7
	.370 9.40	5745171-5	5745854-1	—	—	745508-6	6-745129-9	4-745130-0	543013-6	813809-5
2	.225 5.72	5745172-3	5747099-7	5745652-4	—	745508-3	—	—	—	—
	.240 6.10	5745172-1	5747099-3	5745652-2	—	—	7-745129-8	3-745130-8	543013-2	813809-1
	.240 6.10	1-5745172-3 / 5745919-1	5747099-1	5745652-1	—	—	7-745129-3	3-745130-8	543013-3	813809-1
	.280 7.11	1-5745172-3 / 5745919-1	5747099-1	5745652-1	—	—	7-745129-8	4-745130-5	1-543013-6	813809-7
	.300 7.62	5745172-2 / 5745919-3	5747099-5	5745652-3	—	745508-4	—	—	—	—
	.350 8.90	1-5745172-3 / 5745919-1	5747099-1	5745652-1	—	—	7-745129-2	3-745130-9	543013-4	813809-2
	.365 9.27	5745172-1	5747099-3	5745652-2	—	—	6-745129-9	4-745130-0	543013-6	813809-5
	.375 9.53	5745172-1 / 5745919-2	5747099-3	5745652-2	—	745508-6	—	—	—	—
	.430 10.92	1-5745172-3 / 5745919-1	5747099-1	5745652-1	—	745508-1	7-745129-1	4-745130-1	543013-7	813809-3
3	.240 6.10	5745173-3	5745833-5	5745653-3	5747194-3	—	7-745129-3	3-745130-8	543013-3	813809-1
	.280 7.11	5745173-5	5745833-9	5745653-5	—	745508-4	—	—	—	—
	.280 7.11	5745173-3	5745833-5	5745653-3	5747194-3	—	7-745129-8	4-745130-5	1-543013-6	813809-7
	.350 8.90	5745173-4	5745833-7	5745653-4	—	745508-5	—	—	—	—
	.350 8.90	5745173-3	5745833-5	5745653-3	5747194-3	—	7-745129-2	3-745130-9	543013-4	813809-2
	.430 10.92	5745173-3	5745833-5	5745653-3	5747194-3	745508-1	7-745129-1	4-745130-1	543013-7	813809-3
	.430 10.92	5745173-1	5745833-1	5745653-1	—	—	7-745129-5	4-745130-1	543013-8	813809-3
	.480 12.19	5745173-2	—	5745653-2	—	745508-8	—	—	—	—
	.530 13.46	5745173-1	5745833-1	5745653-1	—	745508-9	7-745129-4	4-745130-2	1-543013-0	813809-4

*For split-ring ferrules, Min. O.D. is .040 [1.02] smaller than Max. O.D.
**For inner and outer ferrules, Min. O.D. is .050 [1.27] smaller than Max. O.D. At the Max. cable O.D. the Min. insulation thickness is .060 [1.52].

Continued on Page 145

Note: All part numbers are RoHS compliant.

Catalog 82068
Revised 4-12

www.te.com

Dimensions are shown for reference purposes only. Specifications subject to change.

Dimensions are in inches and millimeters unless otherwise specified.
USA: +1 (800) 522-6752

Canada: +1 (905) 475-6222
Mexico/C. Am.: +52 (0) 55-1106-0800
Latin/S. Am.: +54 (0) 11-4733-2200
Germany: +49 (0) 6251-133-1999

UK: +44 (0) 800-267666
France: +33 (0) 1-3420-8686
Netherlands: +31 (0) 73-6246-999
China: +86 (0) 400-820-6015

Shielded Cable Clamps (Continued)

Crimp and Split-Ring Ferrules (Continued)

Shell Size	Cable Dia. (Max.)	When using these Shield Kits → Straight Exit Shield Kit No.		90° Exit Die Cast Shield Kit No.		Use these Ferrules → Split-Ring* Ferrule No.	Crimp Ferrule No. and Tooling No.**			
		Die Cast	Metal-Plated Plastic	With Slide Latch	Without Slide Latch		Inner	Outer	Die Set for Hand Tool 54334-1	Applicator Die Set
4	**.240** 6.10	5745174-4	5747100-7	—	—	—	7-745129-3	3-745130-8	543013-3	813809-1
	.280 7.11	5745174-4	5747100-7	—	—	—	7-745129-8	4-745130-5	1-543013-6	813809-7
	.350 8.90	5745174-5	5747100-9	—	—	745508-5	—	—	—	—
	.350 8.90	5745174-4	5747100-7	—	—	—	7-745129-2	3-745130-9	543013-4	813809-2
	.430 10.92	5745174-4	5747100-7	—	—	745508-1	7-745129-1	4-745130-1	543013-7	813809-3
	.500 12.70	5745174-3	—	—	—	745508-8	—	—	—	—
	.525 13.34	5745174-1	5747100-1	—	—	—	7-745129-6	4-745130-2	1-543013-1	813809-4
	.575 14.61	5745174-2	5747100-3	—	—	1-745508-0	—	—	—	—
	.650 16.51	5745174-1	5747100-1	—	—	1-745508-1	—	—	—	—
5	**.240** 6.10	5745175-6	—	—	—	—	7-745129-0	3-745130-8	543013-2	813809-1
	.365 9.27	5745175-6	—	—	—	—	6-745129-9	4-745130-0	543013-6	813809-5
	.375 9.53	5745175-6	—	—	—	745508-6	—	—	—	—
	.430 10.92	5745175-4	—	—	—	—	7-745129-5	4-745130-1	543013-8	813809-3
	.450 11.43	5745175-5	—	—	—	745508-7	—	—	—	—
	.525 13.34	5745175-4	—	—	—	745508-9	—	—	—	—
	.530 13.46	5745175-4	—	—	—	—	7-745129-4	4-745130-2	1-543013-0	813809-4
	.600 15.24	5745175-3	—	—	—	1-745508-0	—	—	—	—
	.650 16.51	5745175-1	5747098-1	—	—	—	1-745508-1	4-745130-3	1-543013-4	—
	.675 17.15	5745175-2	—	—	—	1-745508-1	—	—	—	—
	.750 19.05	5745175-1	5747098-1	—	—	1-745508-2	—	—	—	—

*For split-ring ferrules, Min. O.D. is .040 [1.02] smaller than Max. O.D.
**For inner and outer ferrules, Min. O.D. is .050 [1.27] smaller than Max. O.D. At the Max. cable O.D. the Min. insulation thickness is .060 [1.52].
Note: Refer to page 143 for Application Tooling for ferrules.

Note: All part numbers are RoHS compliant.

Catalog 82068
Revised 4-12

www.te.com

Dimensions are shown for reference purposes only. Specifications subject to change.

Dimensions are in inches and millimeters unless otherwise specified.
USA: +1 (800) 522-6752

Canada: +1 (905) 475-6222
Mexico/C. Am.: +52 (0) 55-1106-0800
Latin/S. Am.: +54 (0) 11-4733-2200
Germany: +49 (0) 6251-133-1999

UK: +44 (0) 800-267666
France: +33 (0) 1-3420-8686
Netherlands: +31 (0) 73-6246-999
China: +86 (0) 400-820-6015

Hardware

Commoning Strip (for HDF-20 Plugs, Size 20 Pin Contacts)

Material and Finish:

Brass, .004 [0.10] thick, tin plated

Part No. 206918-2
(Continuous Strip)

Related Product Data:

Used with HDF-20 Plugs—page 126

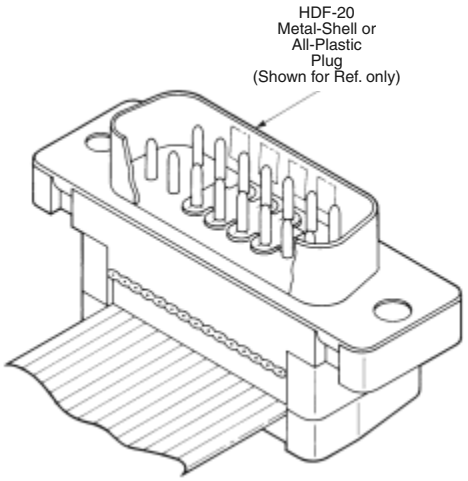

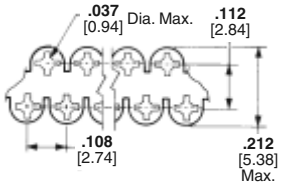

Notes:
1. Use punching tool to remove undesired pin commoning locations on commoning strip. Use mating receptacle to seat strip over pins in plug. Punching tool is not supplied by TE.
2. Sold in strip form, strip contains 10,000 commoning locations.

Male Screw Retainers for Metal-Shell Connectors (HDE and HDP)

Material and Finish:

Male Screw—Steel, zinc plated clear or yellow chromate

Retaining Clip—.012 [0.31] stainless steel

Related Product Data:

Connectors used with:
HDE Metal-Shell—pages 114 & 115
HDP Metal-Shell—pages 90-102

Technical Documents:

Instruction Sheet—408-7837

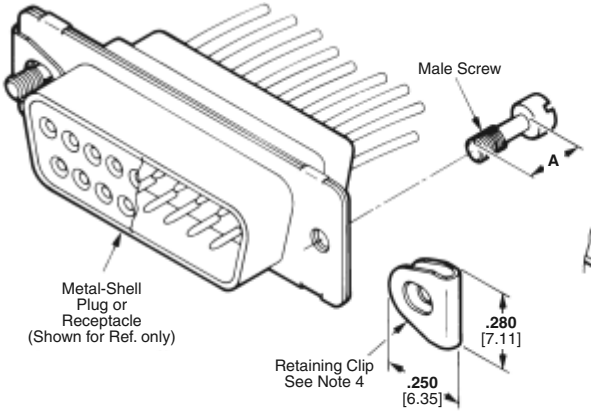

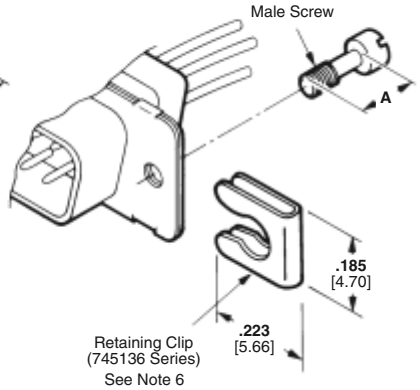

Male Screw Finish	Thread Size	Dimension A	Male Screw Retainer Kit No.	
			Individual	Bulk Packed*
Yellow Chromate	4-40	**.220** 5.59	5205980-1	5205980-3
			5787354-1**	—
		.200 5.08	5745136-1	5745136-2
	M3 (Metric)	**.225** 5.72	5207871-1	—
Clear Chromate	4-40	**.220** 5.59	5205980-4	5205980-5
		.200 5.08	5745136-3	5745136-4

*Each part is individually bulk packed for multiple kit orders. ** Phillips Head Screw

Notes:
1. All parts are packaged unassembled.
2. Each kit is comprised of two male screws and two retaining clips. Male screw retainers are also furnished as part of cable clamp kits (pages 137 and 138).
3. Male screw retainers mate with female screwlocks (page 144), with HDF metal-shell connectors featuring 4-40 threaded inserts (page 148) and with HD metal-shell board mount connectors featuring 4-40 threaded inserts or female screwlocks.
4. Retaining clip must be assembled onto connector flanges with threaded hole toward wire side of connector.
5. All screws have straight slotted heads except where noted.
6. Retaining clip must be assembled onto connector flanges with notched side of retainer toward mating side of connector.

Note: All part numbers are RoHS compliant.

Catalog 82068
Revised 4-12

www.te.com

Dimensions are shown for reference purposes only. Specifications subject to change.

Dimensions are in inches and millimeters unless otherwise specified.
USA: +1 (800) 522-6752

Canada: +1 (905) 475-6222
Mexico/C. Am.: +52 (0) 55-1106-0800
Latin/S. Am.: +54 (0) 11-4733-2200
Germany: +49 (0) 6251-133-1999

UK: +44 (0) 800-267666
France: +33 (0) 1-3420-8686
Netherlands: +31 (0) 73-6246-999
China: +86 (0) 400-820-6015

Hardware (Continued)

Material and Finish:

Male Screw—Steel, zinc plated yellow chromate

Retaining Clip—.012 [0.51] stainless steel

Related Product Data:

Connectors used with:
HDE All-Plastic—pages 112 & 113

Technical Documents:

Instruction Sheet—408-7837

Male Screw Retainers for All-Plastic Connectors (HDE)

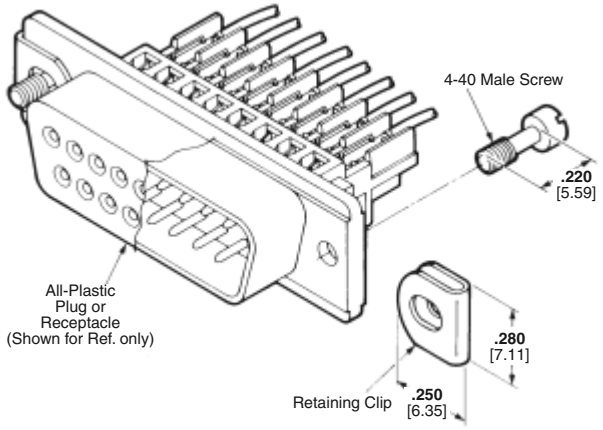

Kit Numbers:
745647-1 (Individually packaged, see Note 2)
745647-2 (Bulk packed)*

*Each part is individually bulk packed for multiple kit orders.

Notes: 1. All parts are packaged unassembled.
2. Each kit is comprised of two 4-40 male screws and two retaining clips.
3. Male screw retainers mate with female screwlocks (page 148), with HDF All-Plastic connectors featuring 4-40 threaded inserts (page 125), with HD All-Plastic board mount connectors featuring integral standoffs with 4-40 threaded inserts and female screwlocks.
4. Retaining clips must be assembled onto connector flanges with threaded hole toward wire side of connector.

Material and Finish:

Male Screw—Steel, zinc plated clear chromate

Retaining Clip—.012 [0.51] stainless steel

Related Product Data:

Connectors used with:
HDF Metal-Shell and All-Plastic—pages 125 & 126

Technical Documents:

Instruction Sheet—408-7837

Male Screw Retainers for Metal-Shell and All-Plastic Connectors (HDF)

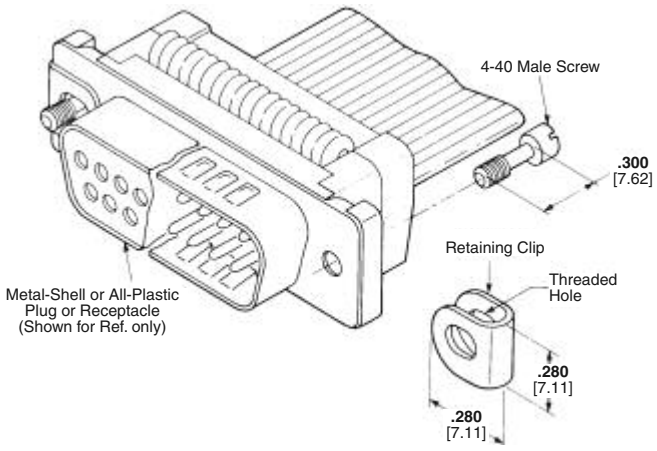

Kit Numbers:
746881-1 (Individually packaged, see Note 2)
746881-2 (Bulk packed)*

*Each part is individually bulk packed for multiple kit orders.

Notes: 1. All parts are packaged unassembled.
2. Each kit is comprised of two male screws and two retaining clips.
3. Male screw retainers mate with female screwlocks (page 148), and with HD board mount connectors featuring female screwlocks.
4. Retaining clips must be assembled onto connector flanges with threaded hole toward wire side of connector.

Note: All part numbers are RoHS compliant.

Catalog 82068
Revised 4-12

www.te.com

Dimensions are shown for reference purposes only. Specifications subject to change.

Dimensions are in inches and millimeters unless otherwise specified.
USA: +1 (800) 522-6752

Canada: +1 (905) 475-6222
Mexico/C. Am.: +52 (0) 55-1106-0800
Latin/S. Am.: +54 (0) 11-4733-2200
Germany: +49 (0) 6251-133-1999

UK: +44 (0) 800-267666
France: +33 (0) 1-3420-8686
Netherlands: +31 (0) 73-6246-999
China: +86 (0) 400-820-6015

Hardware (Continued)

Material and Finish:

All Parts—Cold rolled steel, zinc plated clear or yellow chromate

Related Product Data:

Connectors used with:
HDE Metal-Shell or All-Plastic—pages 112-115
HDF Metal-Shell or All-Plastic—pages 125 & 126
HDP Metal-Shell—pages 90-102
HD Board Mount—pages 54-71, 78-85, 87-89

Technical Documents:

Instruction Sheet—408-7837

Nut Driver, Part No. 811262-1
(Used for assembling female screwlocks to connector flange)

Female Screwlocks for Metal-Shell and All-Plastic Connectors (HDE, HDF, HDP)

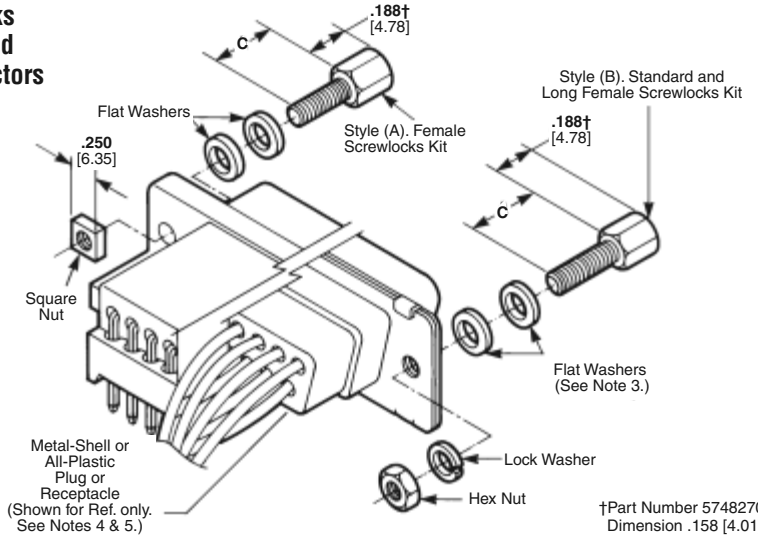

†Part Number 5748270-2
Dimension .158 [4.01]

Connector Used with	Style	Dimension C	Thread Size	Finish	Kit Number	
					Individual	Bulk Packed△
HD All-Plastic Right-Angle Plugs and Receptacles	(A)	**.250** 6.35	4-40	Yellow Chromate	5207952-1	—
				Clear Chromate	5207952-3	—
HDE Metal-Shell or All-Plastic Plugs and Receptacles	(B)	**.250** 6.35	4-40	Yellow Chromate	5745563-1	5745563-1
				Clear Chromate	5745563-3	5745563-4
HDP or HDF Metal-Shell or All-Plastic Plugs and Receptacles	(B)	**.312** 7.93	4-40	Yellow Chromate	5205817-1	5205817-2
				Clear Chromate	5205817-3	5205817-4
			M3 (Metric)	Yellow Chromate	5207872-1	—
				Clear Chromate	5207872-3	—
HD or HDF All-Plastic Plugs and Receptacles with Integral Standoffs	(B)	**.560** 14.22	4-40	Yellow Chromate	5207719-1	5207719-2
				Clear Chromate	5207719-3	5207719-4
			2-56*	Clear Chromate	5747223-3	—

* 2-56 is the male thread size. The female thread size is 4-40.
△ Each part is individually bulk packed for multiple kit orders.

Notes: 1. All parts are packaged unassembled.
2. Each female screwlock kit is comprised of two assemblies as illustrated above.
3. One or two flat washers may be required for panel thicknesses less than .060 [1.52]. Female screwlocks are not recommended for panel thicknesses greater than .060 [1.52].
4. Female screwlocks with 2-56 thread size are to be used with cable clamps with mounting flanges. Female screwlocks with 4-40 and M3 (Metric) thread sizes can be used with all other cable clamps.
5. Female screwlocks mate with male screw retainers (pages 146 and 147).
6. Short female screwlocks cannot be used with HDF connectors (pages 125 & 126)

Individual Screwlocks
(Washers and Nuts not included)

Connector Used with	Style	Dimension C	Thread Size	Finish	Screwlocks	
					Individual	Bulk Packed△
HD All-Plastic Right-Angle Plugs and Receptacles	(A)	**.250** 6.35	4-40	Yellow Chromate	5207953-2	—
				Clear Chromate	5207953-3	—
HDP or HDF Metal-Shell or All-Plastic Plugs and Receptacles	(B)	**.312** 7.93	4-40	Clear Chromate	—	5205818-3△△
					5748558-3	5748558-4
				Yellow Chromate	5748270-2	5205818-2△△
			M2.6** (Metric)	Clear Chromate	5749765-3	—
			M3*** (Metric)	Clear Chromate	5747404-3	—
	(Special)	**.185** 4.70	4-40	Clear Chromate	5747877-3	—

△ Each part is individually bulk packed for multiple kit orders.
△△With captivated star washer. No additional hardware included.
†Part No. 5748270-2 Dimension .158 [4.01]
**M2.6 is the female thread size. The male thread size is 4-40.
***M3 is the female thread size. The male thread size is 4-40.

Note: All part numbers are RoHS compliant.

Catalog 82068
Revised 4-12

www.te.com

Dimensions are shown for reference purposes only. Specifications subject to change.

Dimensions are in inches and millimeters unless otherwise specified.
USA: +1 (800) 522-6752

Canada: +1 (905) 475-6222
Mexico/C. Am.: +52 (0) 55-1106-0800
Latin/S. Am.: +54 (0) 11-4733-2200
Germany: +49 (0) 6251-133-1999

UK: +44 (0) 800-267666
France: +33 (0) 1-3420-8686
Netherlands: +31 (0) 73-6246-999
China: +86 (0) 400-820-6015

Hardware (Continued)

Slide Latches

Material and Finish:

4-40 Screws, Washers and Hex Nuts—Steel, zinc plated yellow chromate

2-56 Screws, Washers and Hex Nuts—Steel, zinc plated clear chromate

Slide Latch—Stainless steel

Related Product Data:

Connectors used with:
HDE Metal-Shell or All-Plastic—pages 112-115
HDF Metal-Shell or All-Plastic—pages 125 & 126
HDP Metal-Shell—pages 90-102
HD Board Mount—pages 54-71, 78-85, 87-89

Technical Documents:

Instruction Sheet—408-6551

Style I

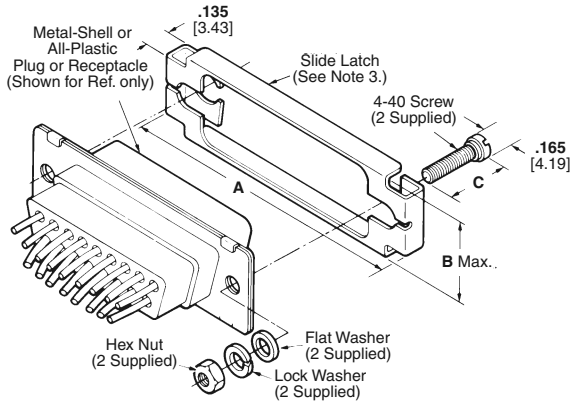

For Shell Sizes 1 and 4

Style II

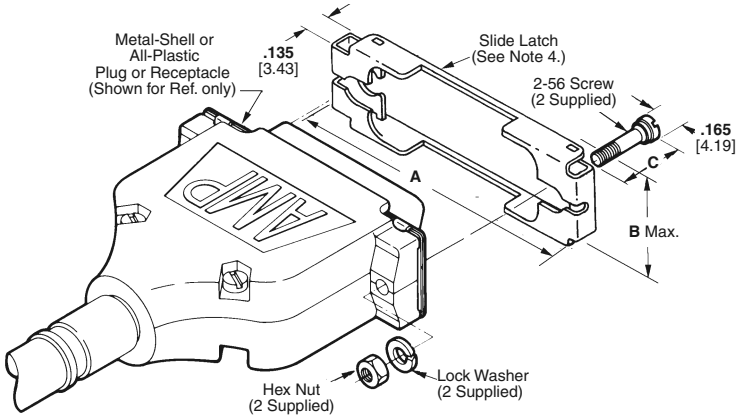

For Shell Sizes 2, 3 and 5

Style III

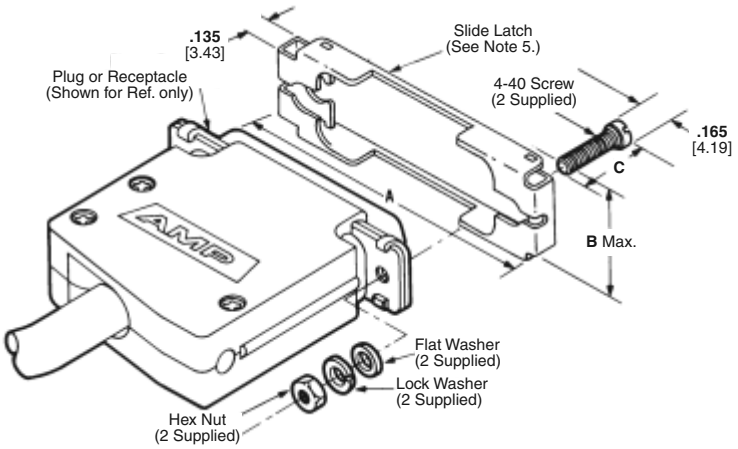

For Shell Sizes 2, 3 and 5

Catalog 82068
Revised 4-12

www.te.com

Dimensions are shown for reference purposes only. Specifications subject to change.

Dimensions are in inches and millimeters unless otherwise specified.
USA: +1 (800) 522-6752

Canada: +1 (905) 475-6222
Mexico/C. Am.: +52 (0) 55-1106-0800
Latin/S. Am.: +54 (0) 11-4733-2200
Germany: +49 (0) 6251-133-1999

UK: +44 (0) 800-267666
France: +33 (0) 1-3420-8686
Netherlands: +31 (0) 73-6246-999
China: +86 (0) 400-820-6015

Hardware (Continued)

Slide Latches

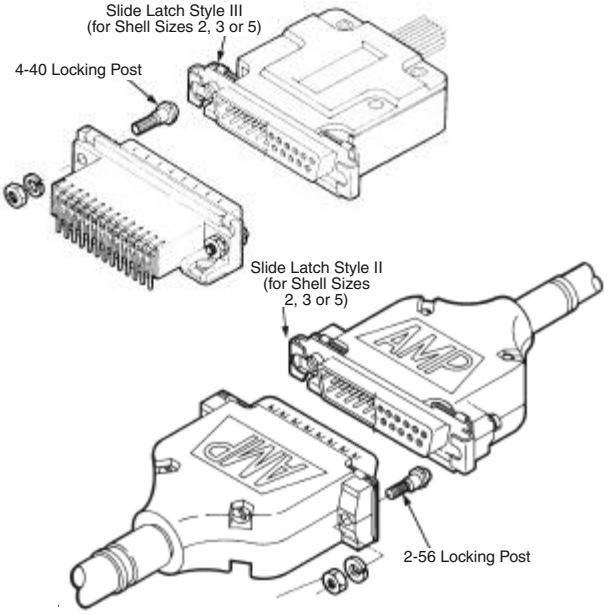

Typical Applications of Locking Posts and Slide Latches

Shell Size	Style	Dimensions			Slide Latch Kit Numbers		Side Latch Only
		A	B	C	Individual	Bulk Packed*	
1	I	**1.397** 35.48	**.490** 12.45	**.415** 10.54	5745404-1	—	164890-1
2	II	**1.725** 43.82	**.470** 11.94	**.547** 13.89	5745583-1	—	749027-1
	III	**1.725** 43.82	**.470** 11.94	**.415** 10.54	5745583-5	—	749027-1
		1.725 43.82	**.470** 11.94	**.450** 11.43	5745583-7	—	—
		1.725 43.82	**.470** 11.94	**.415** 10.54	—	5748653-1	—
		1.725 43.82	**.490** 12.45	**.290** 7.37	5749028-1[7]	—	—
		1.725 43.82	**.437** 11.10	**.415** 10.54	—	5786138-1[7]	—
3	II	**2.265** 57.53	**.470** 11.94	**.547** 13.89	5745584-1	—	749996-1
	III	**2.265** 57.53	**.470** 11.94	**.415** 10.54	5745584-3	—	749996-1
4	I	**2.913** 73.99	**.490** 12.45	**.415** 10.54	5745407-1	—	164890-4
5	III	**2.819** 71.60	**.575** 14.61	**.415** 10.54	5745578-3	—	749997-1

*Each part is individually bulk packed for multiple kit orders.

Notes: 1. All parts are packaged unassembled.
2. Each kit is comprised of a slide latch and two screws, flat washers (if required), lock washers and hex nuts. Style I slide latches are also furnished as part of cable clamp kits (page 142).
3. Style I slide latches can be used with cable clamps that do not extend beyond the front flange of the connector or on connectors without cable clamps.
4. Style II slide latches can be used with any cable clamp that has the mounting ear configuration as shown above.
5. Style III slide latches can be used on connectors without cable clamps or with cable clamps that do not have the mounting ear configuration shown with Style II above.
6. Slide latches mate with locking posts (page 151).
7. No nuts, washers, or lockwashers.

Note: All part numbers are RoHS compliant.

Hardware (Continued)

Slide Latch Clip Assembly for Unfiltered Mating Half

Material and Finish:

Screw, Washers and Hex Nut—Cold rolled steel, zinc plated clear chromate

Clip—Stainless steel

Technical Documents:

Instruction Sheet—408-7785

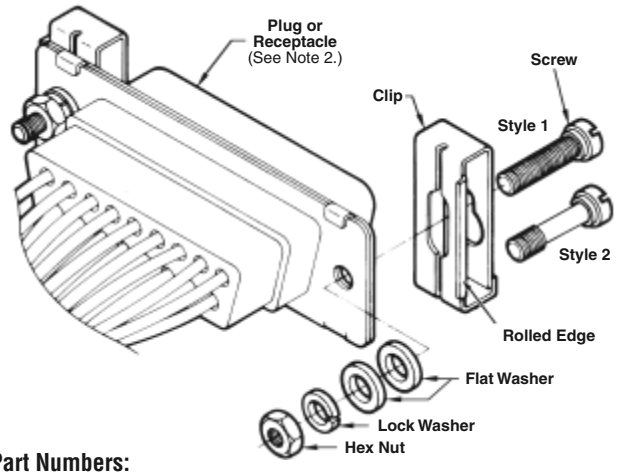

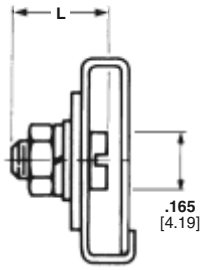

Kit Part Numbers:

Thread Size	Screw Length L	Pkg.	Screw Style	Part No.
4-40	**.415** 10.54	Unit†	1	5206942-1
		Bulk		5206942-2
2-56	**.547** 13.89	Unit	2	5748078-1**
		—		—

† Two assemblies per package.
* Each part is individually bulk packed for multiple kit orders.
** Designed for cable clamps with mounting ears. No flat washers included.

Notes:
1. All parts are packaged unassembled.
2. Slide Latch Clip Assemblies can be used on any Subminiature D AMPLIMITE HD-20 metal-shell plug or receptacle.
3. Slide Latch Clip Assemblies mate with Locking Post Assemblies shown below.

Locking Post Assembly

Material and Finish:

All Parts—Cold rolled steel, zinc plated clear or yellow chromate

Related Product Data:

Connectors used with:
HDE Metal-Shell or All-Plastic—pages 112-115
HDF Metal-Shell or All-Plastic—pages 125 & 126
HDP Metal-Shell—pages 90-102
HD Board Mount—pages 54-71, 78-85, 87-89
Instruction Sheets—
408-6551
408-7785

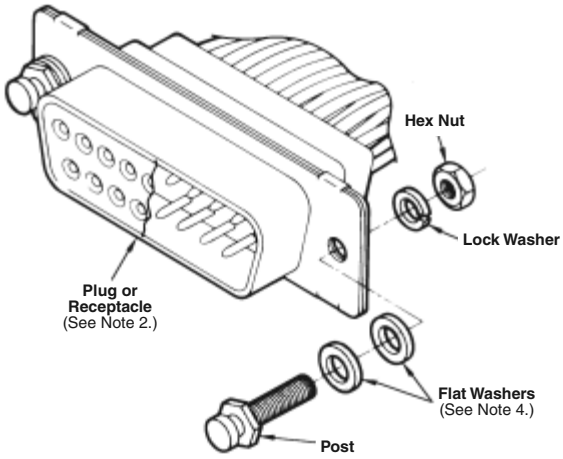

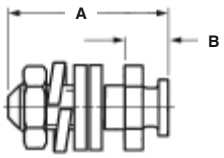

Part No. 206514-1

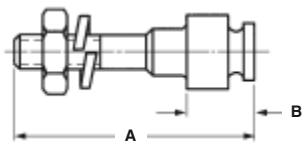

Part No. 747242-1

Thread Size	Locking Post Finish	Dimensions A	Dimensions B	Locking Post Kit Number (See Note 4) Individual	Locking Post Kit Number (See Note 4) Bulk Packed*
4-40	Yellow Chromate	**.410** 10.41	**.110** 2.79	5206514-1	5206514-3
	Clear Chromate	**.410** 10.41	**.110** 2.79	5206514-4	—
	Yellow Chromate	**.560** 14.22	**.110** 2.79	5206514-6	5206514-7
2-56	Yellow Chromate	**.615** 15.62	**.172** 4.37	5747242-1	—

*Each part is individually bulk packed for multiple kit orders.

Notes:
1. All parts are packaged unassembled.
2. Each kit is comprised of two complete assemblies, as illustrated above.
3. For front panel mounting, it is recommended that a shim be used between the connector flange and panel to prevent bowing of the flange.
4. Locking posts with 2-56 thread size are to be used with cable clamps with mounting flanges. Locking posts with 4-40 thread size can be used with all other cable clamps
5. Locking posts mate with slide latches (page 149).

Note: All part numbers are RoHS compliant.

Catalog 82068
Revised 4-12

www.te.com

Dimensions are shown for reference purposes only. Specifications subject to change.

Dimensions are in inches and millimeters unless otherwise specified.
USA: +1 (800) 522-6752

Canada: +1 (905) 475-6222
Mexico/C. Am.: +52 (0) 55-1106-0800
Latin/S. Am.: +54 (0) 11-4733-2200
Germany: +49 (0) 6251-133-1999

UK: +44 (0) 800-267666
France: +33 (0) 1-3420-8686
Netherlands: +31 (0) 73-6246-999
China: +86 (0) 400-820-6015

Hardware (Continued)

Material
.015 [0.38] Stainless steel

Related Product Data:
Connectors used with:
HDE Metal-Shell—pages 114 & 115
HDP Metal-Shell (Tin plated only)—pages 90-102

Technical Documents:
Instruction Sheet—408-9130

Spring Latches for Cable Clamps with Mounting Ears (Two-Piece)

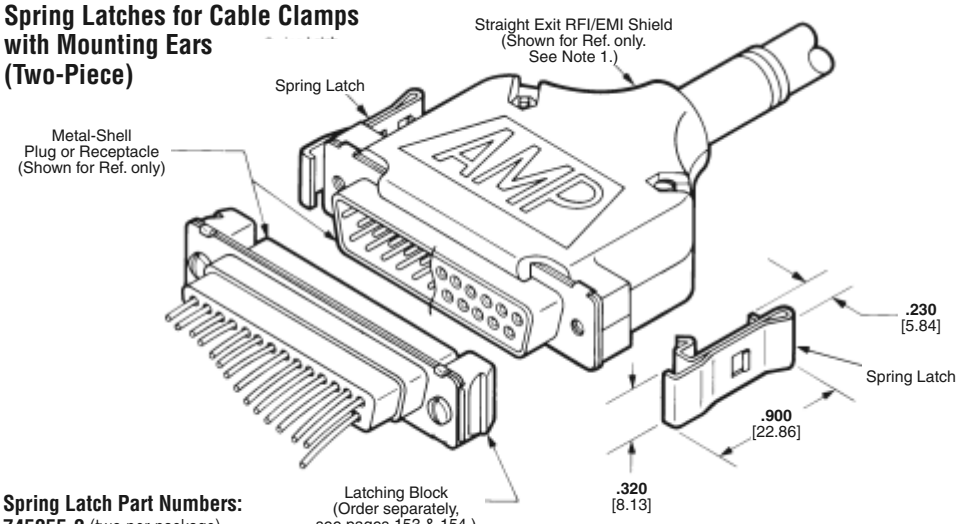

Spring Latch Part Numbers:
745255-2 (two per package)
745255-3 (bulk packed)*
*Two-piece spring latches are individually bulk packed for multiple part orders.

Notes: 1. Two-piece spring latches can be used with RFI/EMI shields (pages 141).
2. Two-piece spring latches mate with latching blocks (pages 153 & 154).

Typical Application of Two-Piece Spring Latches with Straight Exit RFI/EMI Shield

Spring Latches (Two-Piece)

Material:
Stainless steel

Related Product Data:
Connectors used with:
HDE Metal-Shell—pages 114 & 115
HDP Metal-Shell—pages 90-102

Technical Documents:
Instruction Sheet—408-9131

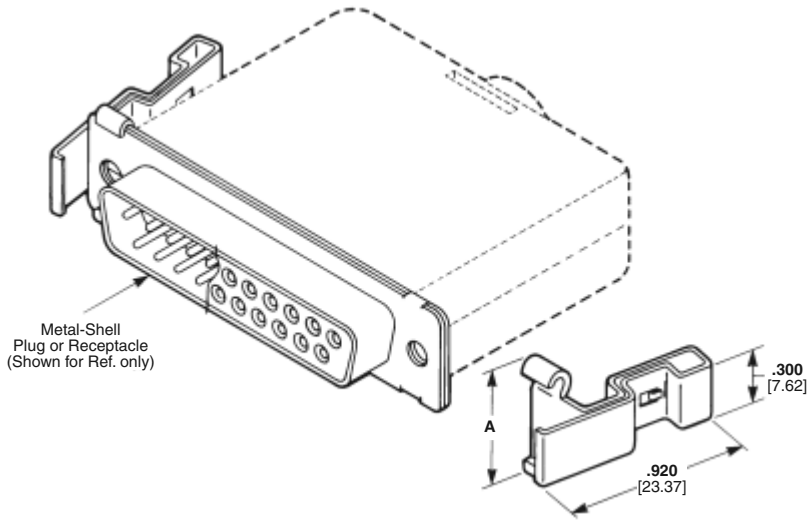

Spring Latch Part Numbers

Size	Dimension A	Two Per Package	Bulk Packed*
1-4	**.540** 13.72	745779-2	745779-3
5	**.650** 16.51	745779-5	—

*Two-piece spring latches are individually bulk packed for multiple part orders.

Notes: 1. These dimensions must be maintained to assure satisfactory operation of the spring latches.
2. Two-piece spring latches mate with latching blocks (pages 153 & 154).

Note: All part numbers are RoHS compliant.

Typical Application of Two-Piece Spring Latches with Post Molded Strain Relief

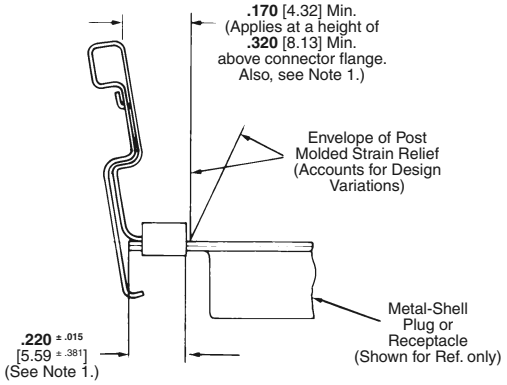

Catalog 82068
Revised 4-12

www.te.com

Dimensions are shown for reference purposes only. Specifications subject to change.

Dimensions are in inches and millimeters unless otherwise specified.
USA: +1 (800) 522-6752

Canada: +1 (905) 475-6222
Mexico/C. Am.: +52 (0) 55-1106-0800
Latin/S. Am.: +54 (0) 11-4733-2200
Germany: +49 (0) 6251-133-1999

UK: +44 (0) 800-267666
France: +33 (0) 1-3420-8686
Netherlands: +31 (0) 73-6246-999
China: +86 (0) 400-820-6015

Hardware (Continued)

Material and Finish:

Latching Blocks—Zinc
Pan Head Screws—Steel, zinc plated

Related Product Data:

Connectors used with:
HDE Metal-Shell or All-Plastic—pages 112-115
HDF Metal-Shell or All-Plastic—pages 125 & 126
HDP Metal-Shell—pages 90-102
HD Board Mount—pages 54-71, 78-85, 87-89
Mating/Panel Mounting—page 136

Technical Documents:

Instruction Sheet—408-9128

Latching Blocks with Threaded Hole

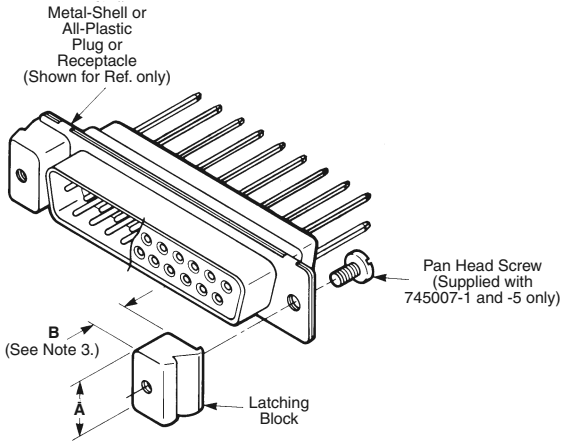

Shell (No. of Contact Pos.)	Dimensions A	Dimensions B	Panel Thickness	Thread Size	Rear-Panel Latching Block Part No. Individual	Rear-Panel Latching Block Part No. Bulk Packed*	Front-Panel Latching Block Part No. Individual	Front-Panel Latching Block Part No. Bulk Packed*
1 thru 4 (9 thru 37)	**.400** 10.16	**.190** 4.83	**.060** 1.52	M3 (Metric)	—	745403-2	—	—
				4-40	745403-8	—	—	—
	.400 10.16	**.220** 5.59	**.030** 0.76	4-40	747717-2	—	—	—
	.400 10.16	**.250** 6.35	—	M3 (Metric)	—	—	5745007-1	—
							208101-1	208101-2
				4-40	—	—	208101-8	208101-9
5 (50)	**.530** 13.46	**.250** 6.35	—	4-40	—	—	1-208101-1	—

*Bulk packed for multiple part orders.
**Individual kits contain two latching blocks per package.

Notes: 1. All parts are packaged unassembled.
2. Each front panel latching block kit is comprised of two latching blocks. Two pan head screws of the appropriate length and thread size to be supplied by customer.
3. B dimension .250 [6.35] is for connector flange mounting, .220 [5.59] is for use with .030 [0.76] thick panels, and .190 [4.83] is for use with .060 [1.52] thick panels.
4. Latching blocks mate with spring latches (page 152).

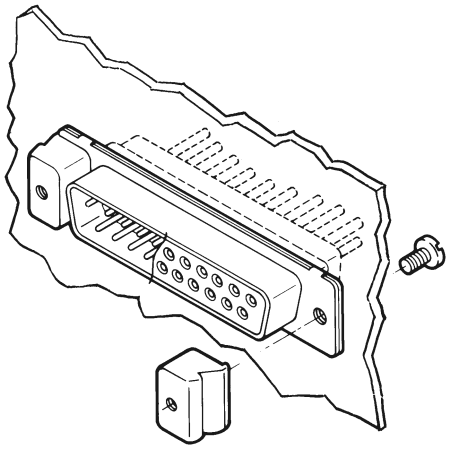

Typical Application of Front-Panel Mounted Subminiature D Connector using Front-Panel Latching Blocks

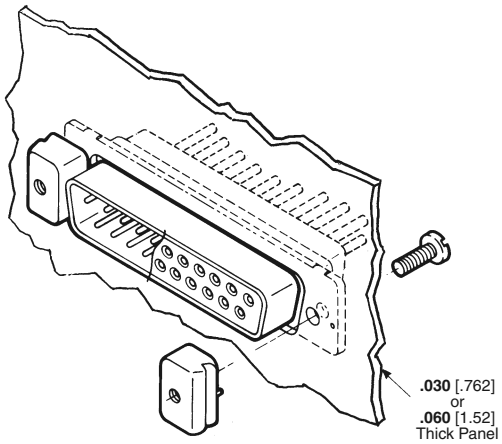

Typical Application of Rear-Panel Mounted Subminiature D Connector using Rear-Panel Latching Blocks

Note: All part numbers are RoHS compliant.

Catalog 82068
Revised 4-12

www.te.com

Dimensions are shown for reference purposes only. Specifications subject to change.

Dimensions are in inches and millimeters unless otherwise specified.
USA: +1 (800) 522-6752

Canada: +1 (905) 475-6222
Mexico/C. Am.: +52 (0) 55-1106-0800
Latin/S. Am.: +54 (0) 11-4733-2200
Germany: +49 (0) 6251-133-1999

UK: +44 (0) 800-267666
France: +33 (0) 1-3420-8686
Netherlands: +31 (0) 73-6246-999
China: +86 (0) 400-820-6015

Hardware (Continued)

Material

Latching Blocks—Zinc

Related Product Data:

Connectors used with:
HDE Metal-Shell or All-Plastic—pages 112-115
HDF Metal-Shell or All-Plastic—pages 125 & 126
HDP Metal-Shell—pages 90-102
HD Board Mount—pages 54-71, 78-85, 87-89
Mating/Panel Mounting—page 136

Technical Documents:

Instruction Sheet—408-9128

Latching Blocks with Slot Recess and Thru Hole

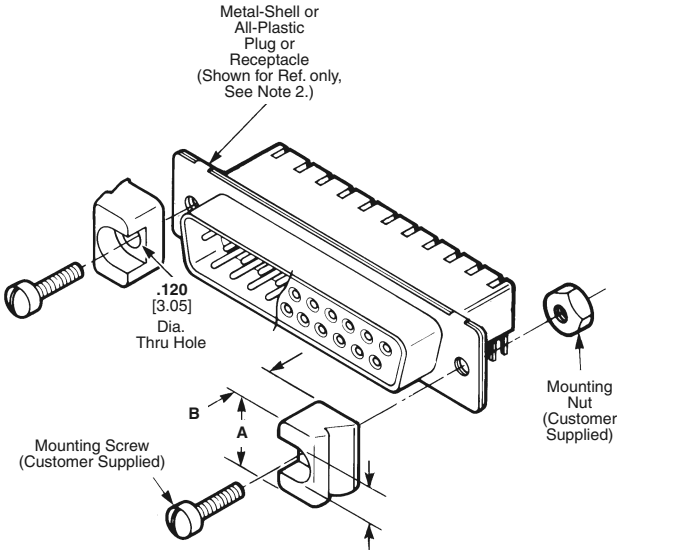

Shell (No. of Contact Pos.)	Dimensions A	Dimensions B	Panel Thickness	Rear-Panel Latching Block Part No. Individual	Rear-Panel Latching Block Part No. Bulk Packed*	Front-Panel Latching Block Part No. Individual
1 thru 4 (9 thru 37)	.400 10.16	.160 4.06	.090 2.29	747080-2	—	—
		.190 4.83	.060 1.52	745245-2	745245-3	—
		.250 6.35	—	—	—	745286-2
5 (50)	.530 13.46	.190 4.83	.060 1.52	—	—	745245-5

*Bulk packed for multiple part orders.
**Individual kits contain two latching blocks per package.

Notes: 1. Mounting screws and nuts are to be supplied by Customer.
2. These latching blocks allow mounting screws to be installed thru the front of the block and to be screwed into the bracket of a right-angle connector, a fixed insert in a connector mounting flange, or a nut behind the connector mounting flange (as illustrated above).
3. Latching blocks mate with spring latches (page 152).

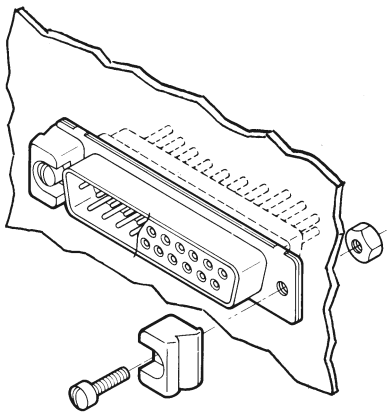

Typical Application of Front-Panel Mounted Subminiature D Connector using Front-Panel Latching Blocks

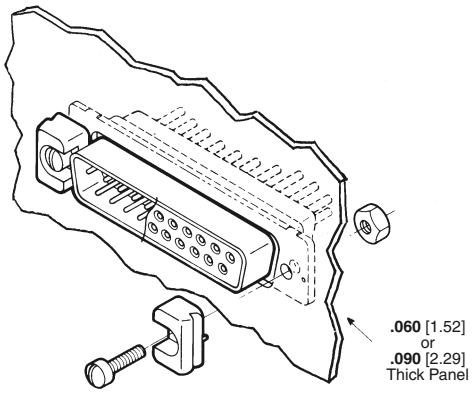

Typical Application of Rear-Panel Mounted Subminiature D Connector using Rear-Panel Latching Blocks

Note: All part numbers are RoHS compliant.

Catalog 82068
Revised 4-12
www.te.com

Dimensions are shown for reference purposes only. Specifications subject to change.

Dimensions are in inches and millimeters unless otherwise specified.
USA: +1 (800) 522-6752

Canada: +1 (905) 475-6222
Mexico/C. Am.: +52 (0) 55-1106-0800
Latin/S. Am.: +54 (0) 11-4733-2200
Germany: +49 (0) 6251-133-1999
UK: +44 (0) 800-267666
France: +33 (0) 1-3420-8686
Netherlands: +31 (0) 73-6246-999
China: +86 (0) 400-820-6015

Hardware (Continued)

Standoff Bushings

Material:

Aluminum

Related Product Data:

Connectors used with:
HD Straight Posted—
pages 76-85, 87-89

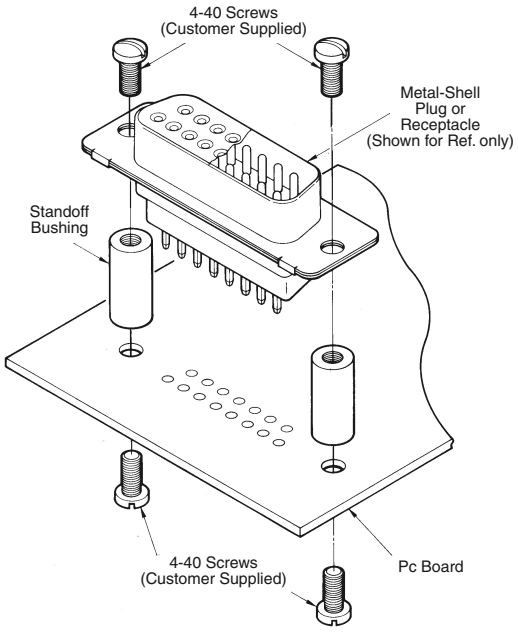

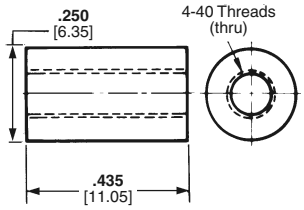

Kit Numbers:
205933-3 (two bushings per package)
205933-4 (bulk packed)*
*Parts are individually bulk packed for multiple part orders.

Keying Plug
(for Size 20 Socket Contacts)

Material:

Polyphenylene oxide

Related Product Data:

Connectors used with:
All HDE, HDP and HD Receptacles with Socket Contacts

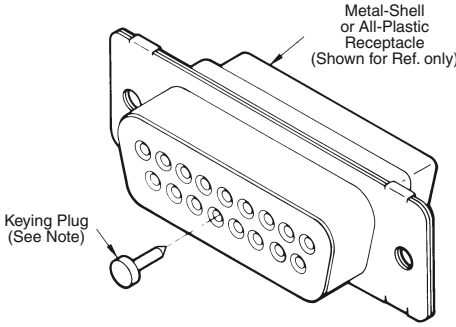

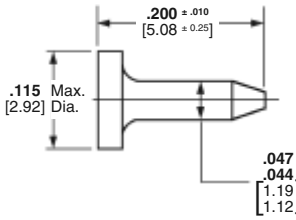

Part Number: 206509-1

Notes: 1. Keying plug is installed taper-end first into front of receptacle.
2. Sold individually.

Keying Plug

499712-1 AMP-LATCH (electrical connectors) can be used on HD22 Socket Contacts

EMI/RFI Gaskets

Material and Finish:

Brass, .006 [0.15] thick;
bright tin plated

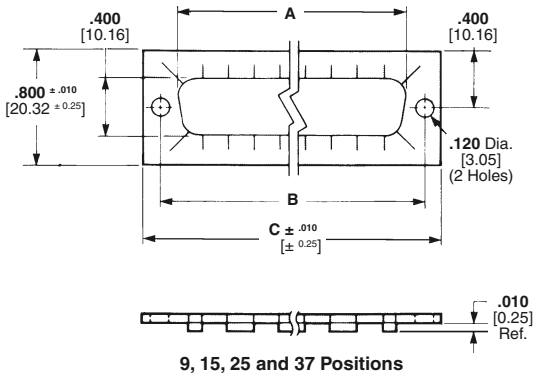

9, 15, 25 and 37 Positions

Shell Size (No. of Contact Pos.)	Dimensions A	Dimensions B	Dimensions C	Gasket Part No.
1 (9)	**.746** 18.95	**.984** 24.99	**1.220** 30.99	5747024-3
2 (15)	**1.074** 27.28	**1.312** 33.32	**1.555** 39.50	5747025-3
3 (25)	**1.614** 41.00	**1.852** 47.04	**2.100** 53.34	745776-4
4 (37)	**2.266** 57.56	**2.500** 63.50	**2.730** 69.34	745777-4

Note: All part numbers are RoHS compliant.

Cable Connectors

Catalog 82068
Revised 4-12

www.te.com

Dimensions are shown for reference purposes only. Specifications subject to change.

Dimensions are in inches and millimeters unless otherwise specified.
USA: +1 (800) 522-6752

Canada: +1 (905) 475-6222
Mexico/C. Am.: +52 (0) 55-1106-0800
Latin/S. Am.: +54 (0) 11-4733-2200
Germany: +49 (0) 6251-133-1999

UK: +44 (0) 800-267666
France: +33 (0) 1-3420-8686
Netherlands: +31 (0) 73-6246-999
China: +86 (0) 400-820-6015

Mouser Electronics

Authorized Distributor

Click to View Pricing, Inventory, Delivery & Lifecycle Information:

TE Connectivity:
58237-2