THIS DRAWING IS UNPUBLISHED. RELEASED FOR PUBLICATION 20
© COPYRIGHT 20 BY - ALL RIGHTS RESERVED.

LOC	DIST
-	-

REVISIONS

P	LTR	DESCRIPTION	DATE	DWN	APVD
	B	REVISED PER ECR-15-006219	30APR2015	NK	JR

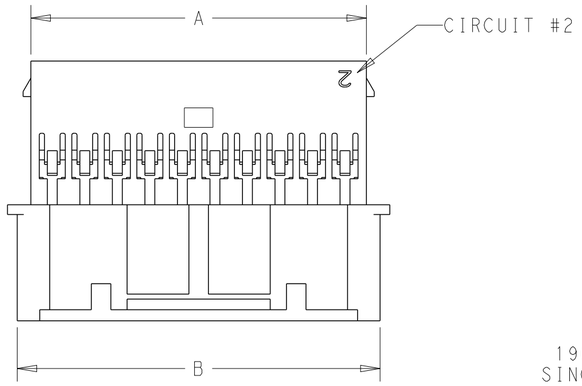

1-1969593-8 THROUGH 4-1969593-0
DOUBLE LATCH

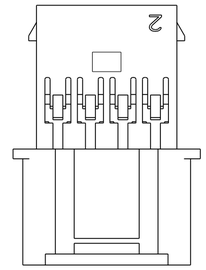

1969593-8 & 1-1969593-0
SINGLE LATCH W/O CUTOUTS

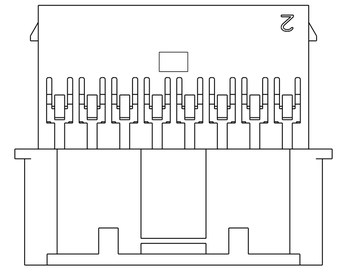

1-1969593-2, 1-1969593-4 & 1-1969593-6
SINGLE LATCH W/ CUTOUTS

1. MATERIAL: NYLON UL94V-0, FLAME RETARDANT, COLOR: NATURAL
2. PARTS TESTED TO IEC 60695-2-11 AND IS COMPLIANT TO IEC 60335-1.
3. HOUSING, MATERIAL MEETS MINIMUM GLOW WIRE FLAMMIBILITY INDEX OF 850°C PER IEC 60695-2-12 AND MINIMUM GLOW WIRE IGNITION TEMP OF 775°C PER IEC 60695-2-13.
4. ACCEPTS TE PIN CONTACTS P/N'S 2238007-( ) & 2238008-( )
5. HOUSING ACCEPTS OPTIONAL TPA P/N'S 1969541-( )
6. MATES WITH TE PLUG HOUSINGS P/N'S 1969567-()

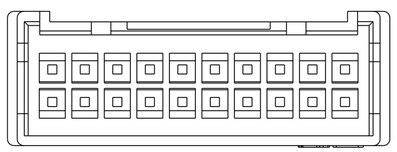

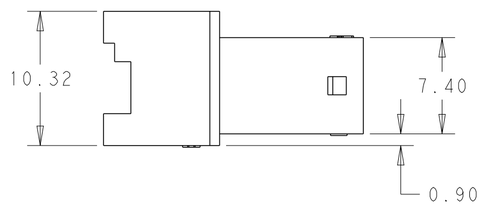

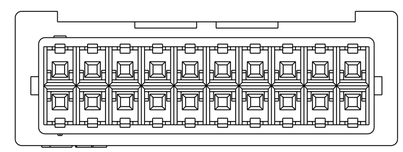

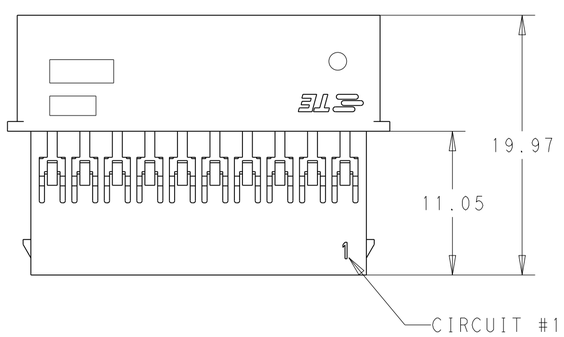

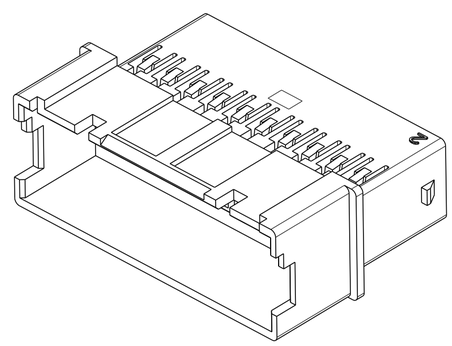

POS	DIM.B	DIM.A	PART NO.
40	52.89	50.79	4-1969593-0
38	50.39	48.29	3-1969593-8
36	47.89	45.79	3-1969593-6
34	45.39	43.29	3-1969593-4
32	42.89	40.79	3-1969593-2
30	40.39	38.29	3-1969593-0
28	37.89	35.79	2-1969593-8
26	35.39	33.29	2-1969593-6
24	32.89	30.79	2-1969593-4
22	30.39	28.29	2-1969593-2
20	27.89	25.79	2-1969593-0
18	25.39	23.29	1-1969593-8
16	22.89	20.79	1-1969593-6
14	20.39	18.29	1-1969593-4
12	17.89	15.79	1-1969593-2
10	15.39	13.29	1-1969593-0
8	12.89	10.79	1969593-8

THIS DRAWING IS A CONTROLLED DOCUMENT.

DIMENSIONS: mm

TOLERANCES UNLESS OTHERWISE SPECIFIED:
0 PLC ±-
1 PLC ±-
2 PLC ±0.25
3 PLC ±-
4 PLC ±-
ANGLES ±-

MATERIAL: SEE NOTES
FINISH: SEE NOTES

DWN A. NOEL 03OCT2012
CHK -
APVD -
PRODUCT SPEC 108-2418
APPLICATION SPEC 114-13315
WEIGHT -

TE Connectivity

NAME EP 2.5 DUAL ROW, RECEPTACLE HSG WIRE TO WIRE, GLOW WIRE

SIZE A2 | CAGE CODE 00779 | DRAWING NO C-1969593 | RESTRICTED TO -

Customer Drawing | SCALE 3:1 | SHEET 1 OF 1 | REV B

Mouser Electronics

Authorized Distributor

Click to View Pricing, Inventory, Delivery & Lifecycle Information:

TE Connectivity:

1-1969593-8