High Performance Relays, Contactors, Solenoids and Power Distribution Units

TE connectivity

Note:

Some of the products shown in this catalog are controlled under the U.S. International Traffic and Arms Regulations (**ITAR**), and may not be exported from the United States without proper authorization by the U.S. Department of State.

Please consult with your local TE Connectivity sales representative regarding this requirement as it varies by part number.

TE Connectivity has extensive capabilities in the design and manufacture of relays, contactors, solenoids and power distribution units for demanding, high performance applications.

We offer components for switching currents from dry circuit to more than 1,000 amps, voltages up to 70kV and frequencies up to 6 GHz. Whether you need commercial off-the-shelf products, components that must meet stringent military specifications or highly specialized, custom-designed products, look to TE Connectivity to meet your requirements.

A wide range of contact configurations, enclosure types and mounting styles are offered. These robust models are designed to withstand the rigors of high shock, vibration and acceleration encountered in aerospace, defense and marine applications. Our custom high performance solenoids produce from a few ounces force to 100 pounds of force at a one-inch stroke.

Other products, such as power controllers, protective relays and time delay relays conveniently combine multiple functions into a single package and are specifically designed for operation in extremes of temperature, shock, vibration and altitude.

Need more information?

Technical Support is staffed with specialists well versed in all TE Connectivity products. They can provide you with:

- Technical Support
- Catalogs
- Technical Documents
- Product Samples
- TE Connectivity Authorized Distributor Locations

Introduction

Section 1

Low Signal Relays

TE Connectivity CII brand low signal electro-mechanical relays are designed and built to perform under the most demanding environmental conditions in military, aerospace and commercial applications. Relays are rated from signal level up to 10 amps switching in a variety of package sizes, mounting configurations, and termination options. There are both non-latching and latching designs. Standard, bifilar, and sensitive coils are available with optional diode suppression. Relays are qualified to MIL-PRF-39016, MIL-R-5757, MIL-PRF-28776, MS27245, and MS27247.

Section 2

High Frequency, Low Signal Relays

TE MW Series relays are noted for their improved signal repeatability and RF switching capabilities to the 6 GHz microwave range in a hermetically sealed, subminiature package. Excellent signal isolation, stable insertion loss, and low VSWR are provided. Standard versions are available for applications ranging from wireless communications to precision high-speed test equipment. High performance versions are available for even more demanding environmental conditions.

Section 3

High Vibration Relays

TE High Vibration MAV and MSV Series TO-5 relays are designed to withstand vibration levels to 380 G's at 200 Hz. The small footprint and low profile offer the customer considerable space savings and permits high density packaging without sacrificing quality performance. Relays are available as standard or sensitive with a variety of coil voltages. The high shock and vibration ratings of MAV and MSV series make them well suited for the rigorous demands of military and aerospace usage.

Section 4

High Reliability Relays and Contactors for Space Applications

TE offers a variety of relay solutions for hi-reliability and space environments. Our space products begin as relays manufactured to established QPL mil specs, then receiving additional processing and testing tailored to the customer's specific application needs.

Clean room construction, highly controlled processes, tracking and serialization of data, quality audits throughout the manufacturing cycle, along with extensive product testing, assure our customers that their hi-reliability standards and requirements will be met or exceeded.

Section 5

Mid-Range Relays

TE CII brand Mid-range relays offer critical size and weight savings in aircraft applications by providing efficient power switching in a compact package. Relays vary in size from the compact 5 amp package all the way up to a 50 amp version in a 1 inch cube enclosure.

Our balanced force design provides the benefit of consistently high contact pressure, reduced bounce, and less arching leading to extended contact life. A variety of coil options are available which allow the AC or DC control.

Terminal styles include socket pins, solder pins, and solder hooks. Each series comes with a variety of mounting options. Relays are qualified to MIL-PRF-6106, MIL-PRF-83536, and M83726 time delay relays.

Section 6

Lightweight AC and DC Contactors/Relays and Sensing Devices

TE offers some of the lightest, smallest and most efficient AC and DC contactors available today for aerospace commercial and military electrical power systems. These contactors are available in multiple contact configurations, current/voltage ratings, auxiliary contact configurations, and mounting styles.

TE prides itself in having the technical experience, knowledge and ability to offer their customers products that meet and exceed their demanding requirements.

HARTMAN AC and DC contactors are light weight and environmentally (gasket) sealed. Hermetically sealed enclosures are available for the most severe environmental conditions or altitudes above 50,000 feet. Multiple main contact configurations and auxiliary contact configurations are available. AC and DC contactors are designed to meet the applicable requirements of MIL-PRF-6106 and/or specific customer specifications.

TE also has Sensing and Protective Devices available with various functions, including current monitoring, reverse current protection, over/under voltage protection, over/under frequency protection, automatic drop-out for starting applications and three-phase remote power controllers with various over current trip functions.

TE offers HARTMAN brand products that are designed for use in the Space Industry. The N-Series relays offer highly reliable switching for 115 Volt AC and 28 Vdc circuits. These units are available with multiple contact configurations, latching or non-latching operating modes, and with current ratings up to 100 amperes and are designed to meet the requirements of MIL-PRF-6106. Because they are ITAR restricted, they are not shown in this catalog.

Catalog 5-1773450-5
Revised 3-13

www.te.com

Dimensions are shown for reference purposes only. Specifications subject to change.

Dimensions are in millimeters unless otherwise specified.

USA: +1 800 522 6752
Asia Pacific: +86 0 400 820 6015
UK: +44 800 267 666

For additional support numbers please visit www.te.com

Introduction (Continued)

Section 7

Lightweight DC Relays and Contactors

TE KILOVAC DC contactors deliver the switching performance demanded by aerospace and defense applications. These lightweight contactors offer continuous current ratings up to 500 amps at 900 Volts DC in very compact packages. Standard and customized individual contactors are available, as well as custom-designed, fully-qualified main power and high voltage distribution assemblies.

Section 8

Time Delay Relays

Our broad line of time delay relays includes delay-on-operate, fixed and adjustable; delay-on-release, fixed & adjustable; and interval timers with relay or solid state outputs. All are hermetically sealed with a variety of package & mounting configurations. Contact ratings range from 2 to 10A, with MIL qualification on 10A versions. Also available are MIL approved subminiature digital timing modules.

Section 9

Sensors

Our versatile line of sensors includes AC & DC voltage sensors, and AC frequency and phase sensors. All are hermetically sealed, with a variety of mounting options, and relay contact outputs.

Section 10

Solid State Relays

The product line includes both AC and DC versions, with output ratings up to 25A. AC relays rated at 2A, 10A, & 25A feature zero voltage turn-on for reduced EMI. DC relays are offered with ratings up to 2A in several miniature hermetically sealed package configurations, some with optional isolated status lines and/or short circuit protection.

Section 11

Protective Relays

TE Protective Relays are designed and manufactured in compliance with UL, CSA, IEEE, military and customer specifications. These relays are in use on applications such as portable generators, automatic transfer switches, irrigation pumps, refineries, oil fields, aircraft, ships and nuclear submarines. A long list of TE protective relays are fully qualified by the military for use in ground support equipment, aircraft and Navy ships high-shock applications. These are managed in the DOD supply system under NSN classes 5945 and 6110.

Section 12

Specialty Relays

TE AGASTAT brand relays feature unmatched accuracy and reliability in a pneumatic timer. Representing over 50 years of research and development in this specialized field, TE AGASTAT brand relays offer unprecedented economy and reliability under severe operating conditions. Voltages range from 6 to 550 VAC/VDC and timing ranges from 0.1 seconds to 60 minutes.

Relays are available in off and on delay models as commercial and nuclear qualified. A broad line of general purpose, time delay, and magnetic latching control relays are also offered.

In addition to our AGASTAT brand relays, TE MDR rotary relays provide good durability and excellent resistance to shock and vibration in specialized applications. Relays are rated up to 10 amps switching, 4 to 24 poles, latching option, and are available in 2 sizes (2-1/2 and 4 inch diameters). MDR relays are also offered as commercial grade.

Section 13

Solenoids

Our solenoids are designed and manufactured on a custom basis to precisely meet your demanding high performance actuation requirements.

Section 14

Power Distribution Units

TE HARTMAN AC and DC power distribution units (PDUs) and KILOVAC DC PDUs are designed, built and qualified to meet your specific requirements serving both the commercial and military industries.

Allow us to apply our significant expertise in integrating bus-bar and plug-in contactors, relays, sensors, monitors, circuit breakers, shunts, generator control units and other components into compact, lightweight power distribution units.

Main Table of Contents

Section 1: CII Low Signal Relays

Single Pole, Electrically Held, 1 Amp or Less . . . . . 1-2 – 1-9
Double Pole, Electrically Held, 1 Amp or Less . . . . . 1-10 – 1-35
Double Pole, Electrically Held, 2 Amps and Less . . . . . 1-36 – 1-46
Double Pole, Magnetic Latching, 2 Amps or Less. . . . . 1-47 – 1-52
Four Pole, Electrically Held, 2 Amps or Less . . . . . 1-53 – 1-59
Four Pole, Magnetic Latching, 2 Amps or Less. . . . . 1-60 – 1-62
Six Pole, Electrically Held, 2 Amps and Less 1-63, 1-64
Double Pole, Electrically Held, 5 Amps and Less . . . . . 1-65 – 1-69
Single Pole, Electrically Held, 10 Amps and Less 1-70
Double Pole, Electrically Held, 10 Amps and Less 1-71, 1-72

Section 2: CII High Frequency, Low Signal Relays

Introduction. 2-2
Double Pole, Electrically Held, 1 Amp and Less . . . . . 2-3 – 2-8

Section 3: CII High Vibration Applications

Double Pole, Electrically Held, 1 Amp or Less . . . . . 3-2 – 3-5

Section 4: CII High Reliability, Low Signal Applications

CII High Reliability Space Relays 4-2, 4-3

Section 5: CII Mid-Range Relays

TD2 Series Time Delay Relays per MIL-PRF-83726/28, /29, /30 & /31 . . . 5-2 – 5-5
Double-pole, Electrically Held, 5 Amps and Less . . . . . 5-6 – 5-8
Four-pole, Electrically Held, 5 Amps and Less . . . . . 5-9 – 5-11
Double-pole, Electrically Held, 5 Amps and Less . . . . . 5-12 – 5-17
Four-pole, Electrically Held, 5 Amps and Less . . . . . 5-18 – 5-20
Single-pole, Electrically Held, 25 Amps and Less. . . . . 5-21 – 5-23
Three-Pole, Electrically Held, 25 Amps and Less . . . . . 5-24 – 5-26
Three-Pole, Electrically Held, 25 Amps and Less,
with Auxiliary Contacts . . . . . 5-27 – 5-29
Single-Pole, Electrically Held, 50 Amps and Less . . . . . 5-30 – 5-33
Single-Pole, Electrically Held, 50 Amps and Less
with Auxiliary Contacts . . . . . 5-38 – 5-41
Single-Pole, Electrically Held, 50 Amps and Less
with Auxiliary Contacts . . . . . 5-38 – 5-41
Selection and Application Guide 5-42
Cross Reference - Socket to Relay 5-43

Catalog 5-1773450-5
Revised 3-13

www.te.com

Dimensions are shown for reference purposes only. Specifications subject to change.

Dimensions are in millimeters unless otherwise specified.

USA: +1 800 522 6752
Asia Pacific: +86 0 400 820 6015
UK: +44 800 267 666

For additional support numbers please visit www.te.com

Main Table of Contents (Continued)

Section 6: HARTMAN Power Switching Contactors

AC Contactors
25 Ampere . . . . . 6-6 – 6-8
30 Ampere 6-9
50 Ampere . . . . . 6-10 – 6-21
60 Ampere . . . . . 6-22 – 6-26
100 Ampere . . . . . 6-27 – 6-29
120 Ampere . . . . . 6-30 – 6-35
125 Ampere 6-36
130 Ampere 6-37
175 Ampere . . . . . 6-38 – 6-42
200 Ampere . . . . . 6-43 , 6-44
260/350 Amperes . . . . . 6-45 – 6-47
275 Amperes 6-48, 6-49
500 Amperes 6-50, 6-51
Cross Reference 6-52, 6-53

Lightweight High Performance DC Contactors
Introduction 6-54
200 Amperes . . . . . 6-55 – 6-57
400 Amperes . . . . . 6-58 – 6-61
500 Amperes . . . . . 6-62 – 6-64
1000 Amperes 6-65
Cross Reference 6-66

DC Contactors
25 Amperes . . . . . 6-67 – 6-69
50 Amperes . . . . . 6-70 – 6-73
100 Amperes . . . . . 6-74 – 6-79
200 Amperes . . . . . 6-80 – 6-83
230 Amperes 6-84
300 Amperes . . . . . 6-85 – 6-94
400 Amperes . . . . . 6-95 – 6-106
500 Amperes 6-107
600 Amperes . . . . . 6-108 – 6-113
Cross Reference . . . . . 6-114 – 6-116

Sensors and Protective Devices
AC Low Voltage Warning Relay 6-117
Battery Contactor 6-118
Current Sensor, 25 AMP Single Phase 400 Hz 6-119
Cutout, Reverse Current 100 Amp 6-120
Cutout, Reverse Current, 200 Amps 6-121
Cutout, Reverse Current, 300 Amperes 6-122, 6-123
Cutout, Reverse Current, 400 Amperes 6-124, 6-125
Cutout, Reverse Current, 600 Amperes 6-126
Monitor, External Power, 3 Phase, 400 Hz 6-127
Relay, Automatic Dropout, 600 Amperes 6-128, 6-129
Relay, Automatic Cutout, 200 Amperes 6-130

Main Table of Contents (Continued)

Section 6: HARTMAN Power Switching Contactors (continued)

Relay, Automatic Cutout, 300 Amperes 6-131
Relay, Automatic Cutout, 350 Amperes 6-132
Relay, Current Indicator, 2 Amperes 6-133
Relay, Current Indicator, 3.5 Amperes 6-134
Relay, Current Indicator, 6.25 Amperes 6-135
Relay, Current Indicator, 10 Amperes 6-136
Relay, Current Indicator, 15 Amperes 6-137
Relay, Current Indicator, 16 Amperes 6-138
Relay, Current Indicator, 20 Amperes 6-139, 6-140
Relay, AC Current Indicator, 5 Amperes 6-141
Relay, AC Current Indicator, 15 Amperes 6-142
Relay, Undervoltage AC 3 Phase, 10 Amperes 6-143
Relay, Undervoltage, Time Delay, 10 Amperes 6-144
Relay, Voltage Sensing, 10 Amperes 6-145
Remote Power Controller, 100 Amperes 6-146
Remote Power Controller, 110 Amperes 6-147
Remote Power Controller, 60 Amperes 6-148
Remote Power Controller, 70 Amperes 6-149
Undervoltage Sensor, 10 Amperes 6-150
Cross Reference 6-151, 6-152

Section 7: KILOVAC High Voltage Relays and Contactors

High Voltage DC Contactors . . . . . 7-4 – 7-33
MAP Aerospace Military Contactors . . . . . 7-6 – 7-13
CAP Aerospace Commercial . . . . . 7-14 – 7-20
EV OEM/Commercial & Electrical Vehicle . . . . . 7-21 – 7-28
LEV Industrial Commercial . . . . . 7-29 – 7-33
AC Contactors. . . . . 7-34 – 7-36
Traditional 270 Vdc Aerospace Relays . . . . . 7-37 – 7-41
Traditional 28 Vdc to 1800 Vdc Relays . . . . . 7-42 – 7-48
High Voltage Relays. . . . . 7-49 –7-86
Quick Reference Guide 7-49, 7-50
270 Vdc Aerospace Relays . . . . . 7-51 – 7-54
28 Vdc to 1800 Vdc Relays 7-55, 7-56
1.5 - 2.0 kV Relays 7-57
3.5 kV Relays 7-58
5.0 kV Relays . . . . . 7-59 – 7-61
7.5 kV Relays 7-62
8.0 kV Relays . . . . . 7-63 – 7-66
10 kV Relays . . . . . 7-67 – 7-70
12 kV Relays 7-71

Main Table of Contents (Continued)

Section 7: KILOVAC High Voltage Relays and Contactors (continued)

15 kV Relays . . . . . 7-72 – 7-76
20/25 kV Relays 7-77
25 kV Relays . . . . . 7-78 – 7-81
35 kV Relays . . . . . 7-82 – 7-84
50 kV Relays 7-85
70 kV Relays 7-86
Mounting Methods 7-87
Special Connectors 7-88, 7-89
Application Notes for EV/LEV Contactors 7-90, 7-91
Application Notes for MAP/CAP Contactors . . . . . 7-92 – 7-94
Application Notes on Coil Power Economizing using PWM 7-94, 7-95

Section 8: Kilovac Time Delay Relays

1600/1700 Series, Delay on operate, relay output 8-2, 8-3
2400 Series, Delay on operate, relay output 8-4
5600/5700 Series, Delay on release, relay output 8-5, 8-6
1800/1900 Series, Delay on operate, solid state output 8-7
6001 Series, Delay on operate, solid state output 8-8
4600/4700 Series Interval timer, relay output 8-9, 8-10
4800 Series Interval timer, solid state output 8-11

Section 9: Kilovac Sensing Relays

1310 Series DC Voltage Sensors 9-2
1350 Series AC Voltage Sensors 9-3
1400 Series AC Phase Sensors 9-4, 9-5
7000 Series AC Frequency Sensors 9-6

Section 10: Kilovac Solid State Relays

DS11 Series DC Relays, 2 Amp Output . . . . . 10-2 – 10-5
DS13 Series DC Relays, 2 Amp Output . . . . . 10-6 – 10-9
MS14 Series Military Solid State Relay 10-10,10-11
JTS5, 6 & 7 Series, Up to 250mA and 250V Output 10-12
MS18 Series, DC & Bidirectional Output,
Up to 2A & 350V Output 10-13, 10-14
JDS9 Series, AC Relays, 2A/250Vrms Rating 10-15
PS12 Series, AC Relays, 10A/250Vrms Rating 10-16, 10-17
JPS10 Series, AC Relays, 25A/250Vrms Rating 10-18, 10-19

Main Table of Contents (Continued)

Section 11: Protective Relays

WD Series . . . . . 11-2 – 11-11
Voltage Sensitive Relays . . . . . 11-12 – 11-19
Reverse Power Relay 11-20
Phase Failure Relay 11-21
Phase Sequence Relays 11-22
Current Balance Relay 11-23
Current Sensitive Relays 11-24, 11-25
Current Differential Relay 11-26
Paralleling Relays 11-27
Frequency Sensitive Relays 11-28, 11-32
Ground Fault Relays 11-33, 11-34
Additional Relays . . . . . 11-35 – 11-43

Section 12: Specialty Relays

MDR Series 12-2, 12-3
2100 Series . . . . . 12-4 – 12-7
7000 Series . . . . . 12-8 – 12-14
E7000 Series . . . . . 12-15 – 12-20
EGP Series . . . . . 12-21 – 12-27
EML Series . . . . . 12-21 – 12-27
ETR Series . . . . . 12-21 – 12-27
GP Series . . . . . 12-28 – 12-30
ML Series 12-28, 12-29, 12-32
TR Series 12-28, 12-31, 12-32
VCA Series 12-33
VMA Series 12-34
SCB Series 12-35
SCC Series 12-35
SCE Series 12-36
SCF Series 12-37
SRC Series 12-38
SSC Series 12-39
SSF Series 12-40
SST Series 12-41
STA Series 12-42
VTM1 Series 12-43
VTM-1 Series 12-44
VTM2 Series 12-45
VTM3 Series 12-46
VTM4 Series 12-47
VTM7 Series 12-48
VTMA1 Series 12-49
VTMR1 Series 12-50

Main Table of Contents (Continued)

Section 13: CII Solenoids

Custom High Performance Solenoids 13-2, 13-3
Custom Tubular Solenoids . . . . . 13-4 – 13-6

Section 14: KILOVAC Power Distribution Units

Power Distribution Units 14-2

Section 15: Military Qualified Products List (QPL)

Introduction. 15-2
Part Number Example 15-2
CII Hybrid Relays 15-3, 15-4
CII Electromechanical Relays . . . . . 15-4 to 15-20
HARTMAN Contactors 15-20
KILOVAC Vacuum Relays 15-20, 15-21
CII Time Delay Relays 15-21
KILOVAC Solid State Relays 15-22
Superseded Conversion Index . . . . . 15-22 – 15-25

Section 16: Reference

Non-Power Swtiching Applications . . . . . 16-2 – 16-4
Power Switching Applications . . . . . 16-6 – 16-9
Test Equipment for HARTMAN Relays and Contactors 16-9
Typical KILOVAC Relay Applications. 16-10, 16-12
Relay Application Notes . . . . . 16-13 – 16-16
Common KILOVAC High Voltage Relay Designs 16-17
Definition of Specifications 16-18, 16-19
Contact Configurations. 16-20

Section 17: Part Number Listing

Miscellaneous Information

Disclaimer

While TE has made every reasonable effort to ensure the accuracy of the information herein, nothing herein constitutes any guarantee that such information is error-free, or any other representation, warranty or guarantee that the information is accurate, correct, reliable or current. The TE entity issuing this publication reserves the right to make any adjustments to the information contained herein at any time without notice. All implied warranties regarding the information contained herein, including, but not limited to, any implied warranties of merchantability or fitness for a particular purpose are expressly disclaimed. The dimensions herein are for reference purposes only and are subject to change without notice. Specifications are subject to change without notice. Consult TE for the latest dimensions and design specifications.

© 2012 Tyco Electronics Corporation. All Rights Reserved.

AGASTAT, AMP, CII, CZONKA, HARTMAN, KILOVAC, LOUVERTAC, SPUD, TE Connectivity and TE Connectivity (logo) are trademarks of the TE Connectivity Ltd. family of companies.

BELDEN is a trademark of Belden Wire and Cable Company.

GRILON is a trademark of EMS-Grivory

KOVAR is a trademark of Carpenter Technology Corporation.

NORYL is a trademark of SABIC Innovative Plastics

PPG is a trademark of PPG Industries.

Sherwin-Williams is a trademark of The Sherwin-Williams Company.

Rynite® and Zytel® are trademarks of E.I. du Pont de Nemours and Company.

YAZAKI is a trademark of Yazaki North America, Inc.

Other products, logos, and company names mentioned herein may be trademarks of their respective owners.

See inside back cover for Global Contacts and phone numbers.

Engineering Notes

Catalog 5-1773450-5
Revised 3-13

www.te.com

Dimensions are shown for reference purposes only. Specifications subject to change.

Dimensions are in millimeters unless otherwise specified.

USA: +1 800 522 6752
Asia Pacific: +86 0 400 820 6015
UK: +44 800 267 666

For additional support numbers please visit www.te.com

Table of Contents

Single Pole, Electrically Held, 1 Amp and Less . . . . . 1-2 – 1-9
- 1MA, 1MAD, 1MADD 1-2, 1-3
- 1MS, 1MSD, 1MSDD 1-4, 1-5
- 1MAT 1-6, 1-7
- 1MST 1-8, 1-9

Double Pole, Electrically Held, 1 Amp and Less . . . . . 1-10 – 1-35
- MA, MAD, MADD 1-10, 1-11
- MS, MSD, MSDD 1-12, 1-13
- HM, HMD, HS, HSD 1-14, 1-15
- MGA, MGAD, MGADD 1-16, 1-17
- MGS, MGSD, MGSDD 1-18, 1-19
- HC, HCD, HCS, HCSD 1-20, 1-21
- MAT 1-22, 1-23
- MST 1-24, 1-25
- MGAT 1-26, 1-27
- MGST 1-28, 1-29
- SMGA, SMGAD, SMGADD 1-30, 1-31
- SMGS, SMGSD, SMGSDD 1-32, 1-33
- SHC, SHCD, SHCS, SHCSD 1-34, 1-35

Double Pole, Electrically Held, 2 Amps and Less . . . . . 1-36 – 1-46
- HFW, HMB, HMS 1-36, 1-37
- 3SCV 1-38, 1-39
- HFC 1-40
- 3SBC 1-41, 1-42
- 3SCC 1-43, 1-44
- 3SAC, 3SAE 1-45, 1-46

Double Pole, Magnetic Latching, 2 Amps and Less . . . . . 1-47 – 1-52
- LS 1-47, 1-48
- 3SDM 1-49, 1-50
- 3SAM 1-51, 1-52

Four Pole, Electrically Held, 2 Amps and Less . . . . . 1-53 – 1-59
- SR 1-53, 1-54
- 3SBH . . . . . 1-55 – 1-57
- 3SDH 1-58, 1-59

Four Pole, Magnetic Latching, 2 Amps and Less . . . . . 1-60 – 1-62
- 3SBM . . . . . 1-60 – 1-62

Six Pole, Electrically Held, 2 Amps and Less 1-63, 1-64
- SS 1-63, 1-64

Double Pole, Electrically Held, 5 Amps and Less . . . . . 1-65 – 1-69
- HFW4A, HFW5A 1-65, 1-66
- HFC4A, HFC5A 1-67
- FW, FW5A, SF, SF5A 1-68, 1-69

Single Pole, Electrically Held, 10 Amps and Less 1-70
- C 1-70

Double Pole, Electrically Held, 10 Amps and Less 1-71, 1-72
- 07 . . . . . 1-71, 1-72

Catalog 5-1773450-5
Revised 3-13

www.te.com

Dimensions are shown for reference purposes only. Specifications subject to change.

Dimensions are in millimeters unless otherwise specified.

USA: +1 800 522 6752
Asia Pacific: +86 0 400 820 6015
UK: +44 800 267 666

For additional support numbers please visit www.te.com

Single Pole, Electrically Held, 1 Amp and Less

1MA, 1MAD, 1MADD

1MA

Standard TO-5 High Performance Relay

Qualified to MIL-R-39016/7

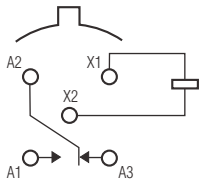

Terminal View

1MAD

Standard TO-5 Diode Suppressed High Performance Relay

Qualified to MIL-R-39016/23

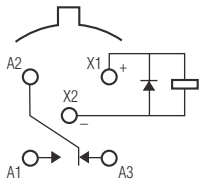

Terminal View

1MADD

Standard TO-5 Diode Suppressed/Protected High Performance Relay

Qualified to MIL-R-39016/24

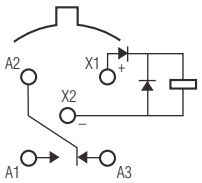

Terminal View

Product Facts

- Hermetically sealed
- High shock & vibration ratings
- Spreader pad
- Excellent RF switching

Product Facts

- Suppression diode
- Hermetically sealed
- High shock & vibration ratings
- Spreader pad
- Excellent RF switching

Product Facts

- Suppression & protection diodes
- Hermetically sealed
- High shock & vibration ratings
- Spreader pad
- Excellent RF switching

Electrical Characteristics

Contact Arrangement — 1 Form C (SPDT)

Contact Material — Stationary — Gold/platinum/palladium/silver alloy (gold plated)
Moveable — Gold/platinum/palladium/silver alloy (gold plated)

Contact Resistance — Before Life — 100 milliohms max. (measured @ 10 mA @ 6 Vdc)
After Life — 200 milliohms max. (measured @ 1 A @ 28 Vdc)

Mechanical Life Expectancy — 1 million operations

Coil Voltage — 5 to 26.5 Vdc

Coil Power — 512 mW max. @ 25°C

Duty Cycle — Continuous

Pick-up Voltage — Approximately 50% of nominal coil voltage

Pick-up Sensitivity — 100 mW max. @ 25°C

Contact Ratings

Contact Load	Type	Operations MINd.
1.0 A @ 28 Vdc	Resistive	100,000
250 mA @ 115 Vac, 60 Hz & 400 Hz	Resistive (case not grounded)	100,000
100 mA @ 115 Vac, 60 Hz & 400 Hz	Resistive	100,000
0.2 A @ 28 Vdc	Inductive (0.32 Henry)	100,000
0.1 A @ 28 Vdc	Lamp	100,000
30 µA @ 50 mVdc	Low Level	1,000,000
0.1 A @ 28 Vdc	Intermediate Current	50,000

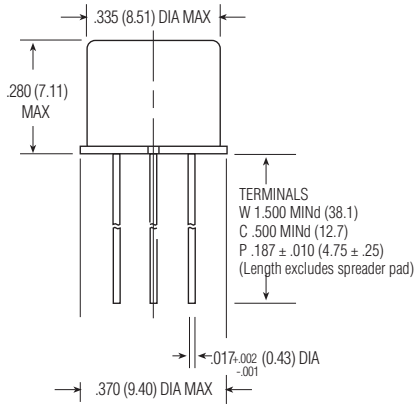

1MA/1MAD/1MADD Enclosure

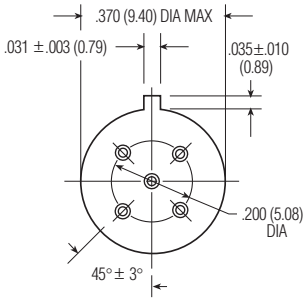

1MA/1MAD/1MADD Header

Catalog 5-1773450-5
Revised 3-13

www.te.com

Dimensions are shown for reference purposes only. Specifications subject to change.

Dimensions are in millimeters unless otherwise specified.

USA: +1 800 522 6752
Asia Pacific: +86 0 400 820 6015
UK: +44 800 267 666

For additional support numbers please visit www.te.com

Single Pole, Electrically Held, 1 Amp and Less (Continued)

1MA, 1MAD, 1MADD
(Continued)

Operating Characteristics

Timing —
Operate Time — 2.0 ms max.
Release Time —
1MA — 2.0 ms max.
1MAD/1MADD — 4.0 ms max.
(suppression diode, suppression/steering diodes)

Contact Bounce — 1.5 ms max

Dielectric Withstanding Voltage —
Between Open Contacts —
500 Vrms 60 Hz
Between Adjacent Contacts —
500 Vrms 60 Hz
Between Contacts & Coil —
500 Vrms 60 Hz

Insulation Resistance —
10,000 megohms @ 500 Vdc
1,000 megohms @ 500 Vdc
(coil to case @ +125°C)

Environmental Characteristics

Temperature Range —
-65°C to +125°C

Weight —
0.08 oz. (2.27 grms)
0.09 oz. (2.52 grms) with spreader pad attached

Vibration Resistance —
30 G's, 10 to 3,000 Hz

Shock Resistance —
75 G's, 6 ±1 ms max.

QPL Approval —
MIL-R-39016/7 (J1MA)
MIL-R-39016/23 (J1MAD)
MIL-R-39016/24 (J1MADD)

Semiconductor Characteristics

Diode —
100 Vdc peak inverse voltage (PIV)
1.0 Vdc max. transient voltage

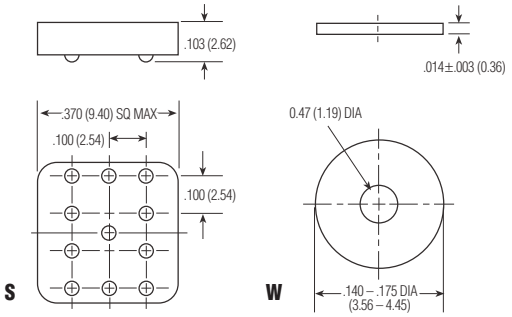

Spreader & Mounting Pads

Coil Data

Nom. Coil Voltage (Vdc)	Coil Resistance in Ohms ±10% @ 25°C (Note 1)	Coil Circuit Current mA (Max.) (Note 1&2)	Coil Circuit Current mA (Min.) (Note 1&2)	Pickup Voltage Vdc (Max.) @ 25°C (Note 2)	Base Turn On Current mA (Max.) @ 25°C	Pickup Voltage Vdc (Max.) @ 125°C (Note 2)	Base Turn On Current mA (Max.) @ 125°C	Drop-Out Voltage Vdc (Min.) @ 25°C (Note 2)	Drop-Out Voltage Vdc (Min.) @ -65°C (Note 2)	Nom. Coil Power (mW) @ 25°C	Max. Coil Voltage	Coil Desig.
1MA/1MAD												
5.0	63	n/a	n/a	2.8	n/a	3.7	n/a	0.23	0.15	397	6.0	5
6.0	125	n/a	n/a	3.5	n/a	4.5	n/a	0.28	0.18	288	8.0	6
9.0	280	n/a	n/a	5.3	n/a	6.8	n/a	0.54	0.35	289	12.0	9
12.0	500	n/a	n/a	7.0	n/a	9.0	n/a	0.63	0.40	288	16.0	12
18.0	1,130	n/a	n/a	10.5	n/a	13.5	n/a	0.91	0.58	287	24.0	18
26.5	2,000	n/a	n/a	14.2	n/a	18.0	n/a	1.37	0.89	351	32.0	26
1MADD												
5.0	50	100.0	72.7	3.5	n/a	4.5	n/a	0.23	0.15	500	6.0	5
6.0	98	62.4	46.3	4.1	n/a	5.5	n/a	0.28	0.18	367	8.0	6
9.0	280	33.7	25.9	6.3	n/a	7.8	n/a	0.54	0.35	289	12.0	9
12.0	500	25.6	20.0	8.0	n/a	10.0	n/a	0.63	0.40	288	16.0	12
18.0	1,130	17.2	13.6	11.6	n/a	14.5	n/a	0.91	0.58	287	24.0	18
26.5	2,000	14.4	11.5	15.4	n/a	19.0	n/a	1.37	0.89	351	32.0	26

Notes: 1. Coil resistance not directly measurable. Coil current should be within limits shown when tested at nominal voltage at 25°C for 5 seconds max.
2. Set base current at 3 mA to 15 mA during measurements.

Ordering Instructions

Catalog-selected Relays: The catalog number is derived by choosing the proper CODE for each of the relay characteristics in the order in which the codes are listed.

Specifying a Part Number Example*:	Type	Terminal	Diodes	Coils	Spreader/Mounting Pads
	1MA	C	D	-26	S

* The part number example shown on this page is for catalog items. For a list of specific QPL part numbers, please see the index in Section 15.

Catalog 5-1773450-5
Revised 3-13

www.te.com

Dimensions are shown for reference purposes only. Specifications subject to change.

Dimensions are in millimeters unless otherwise specified.

USA: +1 800 522 6752
Asia Pacific: +86 0 400 820 6015
UK: +44 800 267 666

For additional support numbers please visit www.te.com

Single Pole, Electrically Held, 1 Amp and Less (Continued)

1MS, 1MSD, 1MSDD

1MS

Sensitive TO-5 High Performance Relay

Qualified to MIL-R-39016/10

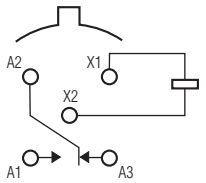

Terminal View

1MSD

Sensitive TO-5 Diode Suppressed High Performance Relay

Qualified to MIL-R-39016/25

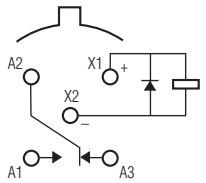

Terminal View

1MSDD

Sensitive TO-5 Diode Suppressed/Protected High Performance Relay

Qualified to MIL-R-39016/26

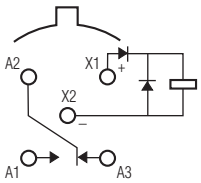

Terminal View

Product Facts

- Hermetically sealed
- High shock & vibration ratings
- Spreader pad
- Excellent RF switching

Product Facts

- Suppression diode
- Hermetically sealed
- High shock & vibration ratings
- Spreader pad
- Excellent RF switching

Product Facts

- Suppression & protection diodes
- Hermetically sealed
- High shock & vibration ratings
- Spreader pad
- Excellent RF switching

Electrical Characteristics

Contact Arrangement — 1 Form C (SPDT)

Contact Material — Stationary — Gold/platinum/palladium/silver alloy (gold plated)
Moveable — Gold/platinum/palladium/silver alloy (gold plated)

Contact Resistance — Before Life — 100 milliohms max. (measured @ 10 mA @ 6 Vdc)
After Life — 200 milliohms max. (measured @ 1 A @ 28 Vdc)

Mechanical Life Expectancy — 1 million operations

Coil Voltage — 5 to 40 Vdc

Coil Power — 506 mW max. @ 25°C

Duty Cycle — Continuous

Pick-up Voltage — Approximately 50% of nominal coil voltage

Pick-up Sensitivity — 40 mW max. @ 25°C

Contact Ratings

Contact Load	Type	Operations MINd.
1.0 A @ 28 Vdc	Resistive	100,000
250 mA @ 115 Vac, 60 Hz & 400 Hz	Resistive (case not grounded)	100,000
100 mA @ 115 Vac, 60 Hz & 400 Hz	Resistive	100,000
0.2 A @ 28 Vdc	Inductive (0.32 Henry)	100,000
0.1 A @ 28 Vdc	Lamp	100,000
30 µA @ 50 mVdc	Low Level	1,000,000
0.1 A @ 28 Vdc	Intermediate Current	50,000

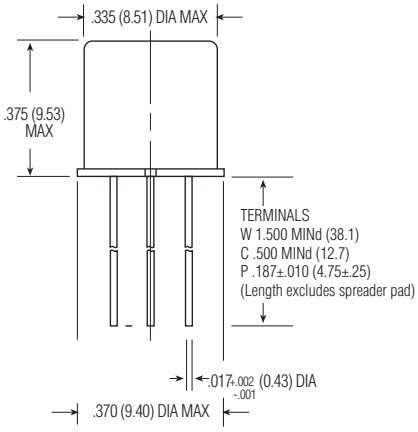

1MS/1MSD/1MSDD Enclosure

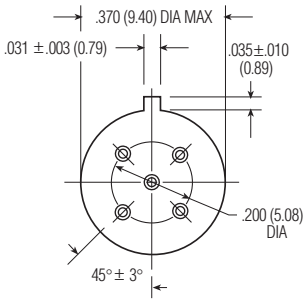

1MS/1MSD/1MSDD Header

Catalog 5-1773450-5
Revised 3-13

www.te.com

Dimensions are shown for reference purposes only. Specifications subject to change.

Dimensions are in millimeters unless otherwise specified.

USA: +1 800 522 6752
Asia Pacific: +86 0 400 820 6015
UK: +44 800 267 666

For additional support numbers please visit www.te.com

Single Pole, Electrically Held, 1 Amp and Less (Continued)

1MS, 1MSD, 1MSDD
(Continued)

Operating Characteristics

Timing —
Operate Time — 4.0 ms max.
Release Time —
1MS — 2.5 ms max.
1MSD/1MSDD — 7.5 ms max.
(suppression diode, suppression/steering diodes)

Contact Bounce — 1.5 ms max

Dielectric Withstanding Voltage —
Between Open Contacts —
500 Vrms 60 Hz
Between Adjacent Contacts —
500 Vrms 60 Hz
Between Contacts & Coil —
500 Vrms 60 Hz

Insulation Resistance —
10,000 megohms @ 500 Vdc
1,000 megohms @ 500 Vdc
(coil to case @ +125°C)

Environmental Characteristics

Temperature Range —
-65°C to +125°C

Weight —
0.10 oz. (2.84 grms)
0.11 oz. (3.09 grms) with spreader pad attached

Vibration Resistance —
30 G's, 10 to 3,000 Hz

Shock Resistance —
75 G's, 6 ±1 ms max.

QPL Approval —
MIL-R-39016/10 (J1MS)
MIL-R-39016/25 (J1MSD)
MIL-R-39016/26 (J1MSDD)

Semiconductor Characteristics

Diode —
100 Vdc peak inverse voltage (PIV)
1.0 Vdc max. transient voltage

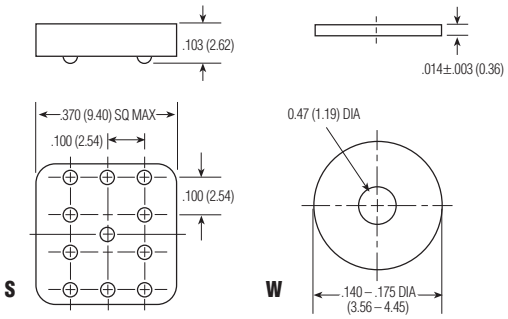

Spreader & Mounting Pads

Coil Data

Nom. Coil Voltage (Vdc)	Coil Resistance in Ohms ±10% @ 25°C (Note 1)	Coil Circuit Current mA (Max.) (Note 1&2)	Coil Circuit Current mA (MINd.) (Note 1&2)	Pickup Voltage Vdc (Max.) @ 25°C (Note 2)	Base Turn On Current mA (Max.) @ 25°C	Pickup Voltage Vdc (Max.) @ 125°C (Note 2)	Base Turn On Current mA (Max.) @ 125°C	Drop-Out Voltage Vdc (MINd.) @ 25°C (Note 2)	Drop-Out Voltage Vdc (MINd.) @ -65°C (Note 2)	Nom. Coil Power (mW) @ 25°C	Max. Coil Voltage	Coil Desig.
1MS/1MSD												
5.0	125	n/a	n/a	2.8	n/a	3.7	n/a	0.23	0.15	200	8.0	5
6.0	255	n/a	n/a	3.5	n/a	4.5	n/a	0.28	0.18	141	11.0	6
9.0	630	n/a	n/a	5.3	n/a	6.8	n/a	0.54	0.35	129	12.0	9
12.0	1,025	n/a	n/a	7.0	n/a	9.0	n/a	0.63	0.40	140	22.0	12
18.0	2,300	n/a	n/a	10.5	n/a	13.5	n/a	0.91	0.59	141	24.0	18
26.5	4,000	n/a	n/a	14.2	n/a	18.0	n/a	1.37	0.89	176	45.0	26
32.0	6,500	n/a	n/a	18.7	n/a	24.0	n/a	1.59	1.0	158	57.0	32
40.0	11,000	n/a	n/a	23.3	n/a	30.0	n/a	2.0	1.3	145	75.0	40
1MSDD												
5.0	100	50.0	36.3	3.5	n/a	4.5	n/a	0.23	0.15	250	8.0	5
6.0	200	30.6	22.7	4.1	n/a	5.5	n/a	0.28	0.18	180	11.0	6
9.0	630	15.0	11.5	6.3	n/a	7.8	n/a	0.54	0.35	129	16.0	9
12.0	1,025	12.5	9.7	8.0	n/a	10.0	n/a	0.63	0.40	140	22.0	12
18.0	2,300	8.5	6.7	11.6	n/a	14.5	n/a	0.91	0.58	141	33.0	18
26.5	4,000	7.2	5.7	15.4	n/a	19.0	n/a	1.37	0.89	176	45.0	26
32.0	6,500	5.4	4.3	17.0	n/a	21.0	n/a	1.5	0.95	158	57.0	32
40.0	11,000	4.0	3.2	22.0	n/a	27.0	n/a	2.0	1.28	145	75.0	40

Notes: 1. Coil resistance not directly measurable. Coil current should be within limits shown when tested at nominal voltage at 25°C for 5 seconds max.
2. Set base current at 3 mA to 15 mA during measurements.

Ordering Instructions

Catalog-selected Relays: The catalog number is derived by choosing the proper CODE for each of the relay characteristics in the order in which the codes are listed.

Specifying a Part Number Example:	Type	Terminal	Diodes	Coils	Spreader/Mounting Pads
	1MS	C	D	-26	S

* The part number example shown on this page is for catalog items. For a list of specific QPL part numbers, please see the index in Section 15.

Catalog 5-1773450-5
Revised 3-13

www.te.com

Dimensions are shown for reference purposes only. Specifications subject to change.

Dimensions are in millimeters unless otherwise specified.

USA: +1 800 522 6752
Asia Pacific: +86 0 400 820 6015
UK: +44 800 267 666

For additional support numbers please visit www.te.com

Single Pole, Electrically Held, 1 Amp and Less (Continued)

1MAT

1MAT

Standard TO-5
Diode Suppressed/
Transistor Driven
High Performance Relay

Qualified to
MIL-R-28776/5

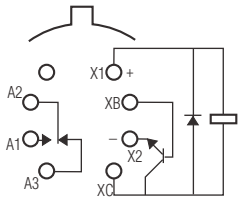

Terminal View

Product Facts

- **Transistor driver & suppression diode**
- **Hermetically sealed**
- **High shock & vibration ratings**
- **Spreader pad**
- **Excellent RF switching**

Electrical Characteristics

Contact Arrangement — 1 Form C (SPDT)

Contact Material — Stationary — Gold/platinum/palladium/silver alloy (gold plated)
Moveable — Gold/platinum/palladium/silver alloy (gold plated)

Contact Resistance — Before Life — 100 milliohms max. (measured @ 10 mA @ 6 Vdc)
After Life — 200 milliohms max. (measured @ 1 A @ 28 Vdc)

Mechanical Life Expectancy — 1 million operations

Coil Voltage — 5 to 26.5 Vdc

Coil Power — 512 mW max. @ 25°C

Duty Cycle — Continuous

Pick-up Voltage — Approximately 50% of nominal coil voltage

Pick-up Sensitivity — 100 mW max. @ 25°C

Contact Ratings

Contact Load	Type	Operations MINd.
1.0 A @ 28 Vdc	Resistive	100,000
250 mA @ 115 Vac, 60 Hz & 400 Hz	Resistive (case not grounded)	100,000
100 mA @ 115 Vac, 60 Hz & 400 Hz	Resistive	100,000
0.2 A @ 28 Vdc	Inductive (0.32 Henry)	100,000
0.1 A @ 28 Vdc	Lamp	100,000
30 µA @ 50 mVdc	Low Level	1,000,000
0.1 A @ 28 Vdc	Intermediate Current	50,000

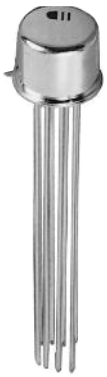

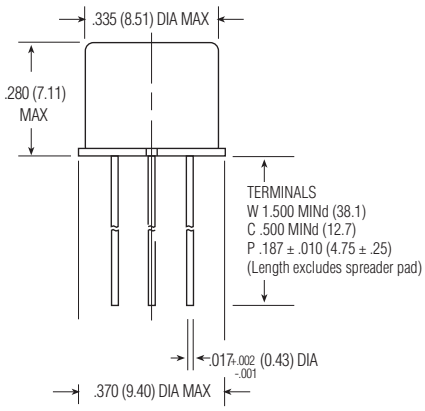

1MAT Enclosure

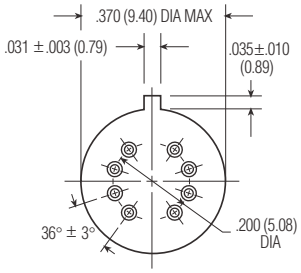

1MAT Header

Catalog 5-1773450-5
Revised 3-13

www.te.com

Dimensions are shown for reference purposes only. Specifications subject to change.

Dimensions are in millimeters unless otherwise specified.

USA: +1 800 522 6752
Asia Pacific: +86 0 400 820 6015
UK: +44 800 267 666

For additional support numbers please visit www.te.com

Single Pole, Electrically Held, 1 Amp and Less (Continued)

1MAT (Continued)

Operating Characteristics

Timing —
Operate Time — 2.0 ms max.
Release Time —
4.0 ms max.

Contact Bounce — 1.5 ms max

Dielectric Withstanding Voltage —
Between Open Contacts —
500 Vrms 60 Hz
Between Adjacent Contacts —
500 Vrms 60 Hz
Between Contacts & Coil —
500 Vrms 60 Hz

Insulation Resistance —
10,000 megohms @ 500 Vdc
1,000 megohms @ 500 Vdc
(coil to case @ +125°C)

Environmental Characteristics

Temperature Range —
-65°C to +125°C

Weight —
0.08 oz. (2.27 grms)
0.09 oz. (2.52 grms) with spreader pad attached

Vibration Resistance —
30 G's, 10 to 3,000 Hz

Shock Resistance —
75 G's, 6 ±1 ms max.

QPL Approval —
MIL-R-28776/5 (J1MAT)

Semiconductor Characteristics

Diode —
100 Vdc peak inverse voltage (PIV)
1.0 Vdc max. transient voltage

Transistor —
0.3 Vdc MINd. base turn off voltage;
6.0 Vdc min. emitter-base breakdown voltage (BV_{EBO}) @ 25°C;
80.0 Vdc min. collector-base breakdown voltage (BV_{CBO}) @ 25°C & I_C=100 µA

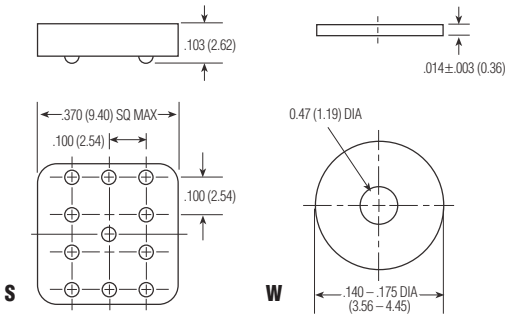

Spreader & Mounting Pads

Coil Data

Nom. Coil Voltage (Vdc)	Coil Resistance in Ohms ±10% @ 25°C (Note 1)	Coil Circuit Current mA (Max.) (Note 1&2)	Coil Circuit Current mA (MINd.) (Note 1&2)	Pickup Voltage Vdc (Max.) @ 25°C (Note 2)	Base Turn On Current mA (Max.) @ 25°C	Pickup Voltage Vdc (Max.) @ 125°C (Note 2)	Base Turn On Current mA (Max.) @ 125°C	Drop-Out Voltage Vdc (MINd.) @ 25°C (Note 2)	Drop-Out Voltage Vdc (MINd.) @ -65°C (Note 2)	Nom. Coil Power (mW) @ 25°C	Max. Coil Voltage	Coil Desig.
1MAT												
5.0	63	89.6	66.6	3.0	0.60	3.9	2.38	0.24	0.15	397	5.8	5
6.0	125	55.5	42.0	3.8	0.42	5.2	1.60	0.31	0.18	288	8.0	6
9.0	280	38.1	28.0	5.6	0.27	7.8	1.07	0.47	0.35	289	12.0	9
12.0	500	28.1	20.9	7.2	0.21	10.0	0.80	0.62	0.40	288	16.0	12
18.0	1,130	18.8	13.8	10.7	0.12	14.5	0.53	0.94	0.58	287	24.0	18
26.5	2,000	15.5	11.5	14.4	0.10	19.0	0.40	1.25	0.89	351	32.0	26

Notes: 1. Coil resistance not directly measurable. Coil current should be within limits shown when tested at nominal voltage at 25°C for 5 seconds max.
2. Set base current at 3 mA to 15 mA during measurements.

Ordering Instructions

Catalog-selected Relays: The catalog number is derived by choosing the proper CODE for each of the relay characteristics in the order in which the codes are listed.

Specifying a Part Number Example:	Type	Terminal	Diodes	Coils	Spreader/Mounting Pads
	1MA	C	T	-26	S

* The part number example shown on this page is for catalog items. For a list of specific QPL part numbers, please see the index in Section 15.

Catalog 5-1773450-5
Revised 3-13

www.te.com

Dimensions are shown for reference purposes only. Specifications subject to change.

Dimensions are in millimeters unless otherwise specified.

USA: +1 800 522 6752
Asia Pacific: +86 0 400 820 6015
UK: +44 800 267 666

For additional support numbers please visit www.te.com

Single Pole, Electrically Held, 1 Amp and Less (Continued)

1MST

1MST

Sensitive TO-5
Diode Suppressed/
Transistor Driven
High Performance Relay

Qualified to MIL-R-28776/4

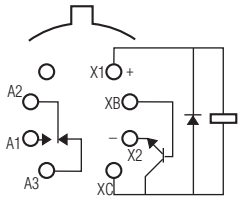

Terminal View

Product Facts

- **Transistor driver & suppression diode**
- **Hermetically sealed**
- **High shock & vibration ratings**
- **Spreader pad**
- **Excellent RF switching**

Electrical Characteristics

Contact Arrangement — 1 Form C (SPDT)

Contact Material — Stationary — Gold/platinum/palladium/silver alloy (gold plated)
Moveable — Gold/platinum/palladium/silver alloy (gold plated)

Contact Resistance — Before Life — 100 milliohms max. (measured @ 10 mA @ 6 Vdc)
After Life — 200 milliohms max. (measured @ 1 A @ 28 Vdc)

Mechanical Life Expectancy — 1 million operations

Coil Voltage — 5 to 40 Vdc

Coil Power — 506 mW max. @ 25°C

Duty Cycle — Continuous

Pick-up Voltage — Approximately 50% of nominal coil voltage

Pick-up Sensitivity — 40 mW max. @ 25°C

Contact Ratings

Contact Load	Type	Operations Min.
1.0 A @ 28 Vdc	Resistive	100,000
250 mA @ 115 Vac, 60 Hz & 400 Hz	Resistive (case not grounded)	100,000
100 mA @ 115 Vac, 60 Hz & 400 Hz	Resistive	100,000
0.2 A @ 28 Vdc	Inductive (0.32 Henry)	100,000
0.1 A @ 28 Vdc	Lamp	100,000
30 µA @ 50 mVdc	Low Level	1,000,000
0.1 A @ 28 Vdc	Intermediate Current	50,000

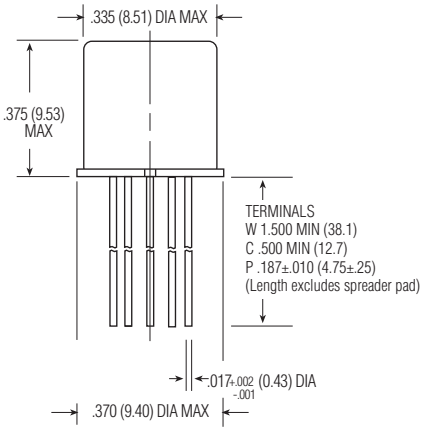

1MST Enclosure

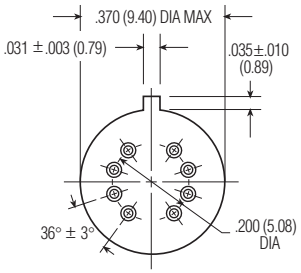

1MST Header

Catalog 5-1773450-5
Revised 3-13

www.te.com

Dimensions are shown for reference purposes only. Specifications subject to change.

Dimensions are in millimeters unless otherwise specified.

USA: +1 800 522 6752
Asia Pacific: +86 0 400 820 6015
UK: +44 800 267 666

For additional support numbers please visit www.te.com

Single Pole, Electrically Held, 1 Amp and Less (Continued)

1MST (Continued)

Operating Characteristics

Timing —
Operate Time —
3.5 ms max.
Release Time —
7.5 ms max.

Contact Bounce — 1.5 ms max

Dielectric Withstanding Voltage —
Between Open Contacts —
500 Vrms 60 Hz
Between Adjacent Contacts —
500 Vrms 60 Hz
Between Contacts & Coil —
500 Vrms 60 Hz

Insulation Resistance —
10,000 megohms @ 500 Vdc
1,000 megohms @ 500 Vdc
(coil to case @ +125°C)

Environmental Characteristics

Temperature Range —
-65°C to +125°C

Weight —
0.10 oz. (2.84 grms)
0.11 oz. (3.09 grms) with spreader pad attached

Vibration Resistance —
30 G's, 10 to 3,000 Hz

Shock Resistance —
75 G's, 6 ±1 ms max.

QPL Approval —
MIL-R-28776/4 (J1MST)

Semiconductor Characteristics

Diode —
100 Vdc peak inverse voltage (PIV)
1.0 Vdc max. transient voltage

Transistor —
0.3 Vdc min. base turn off voltage;
6.0 Vdc min. emitter-base breakdown voltage (BV_{EBO}) @ 25°C;
80.0 Vdc min. collector-base breakdown voltage (BV_{CBO}) @ 25°C & I_C=100 µA

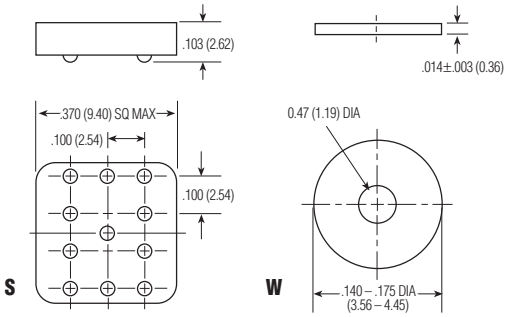

Spreader & Mounting Pads

Coil Data

Nom. Coil Voltage (Vdc)	Coil Resistance in Ohms ±10% @ 25°C (Note 1)	Coil Circuit Current mA (Max.) (Note 1&2)	Coil Circuit Current mA (Min.) (Note 1&2)	Pickup Voltage Vdc (Max.) @ 25°C (Note 2)	Base Turn On Current mA (Max.) @ 25°C	Pickup Voltage Vdc (Max.) @ 125°C (Note 2)	Base Turn On Current mA (Max.) @ 125°C	Drop-Out Voltage Vdc (Min.) @ 25°C (Note 2)	Drop-Out Voltage Vdc (Min.) @ -65°C (Note 2)	Nom. Coil Power (mW) @ 25°C	Max. Coil Voltage	Coil Desig.
1MST												
5.0	125	47.8	34.7	2.6	0.28	3.6	1.20	0.22	0.15	200	8.0	5
6.0	255	27.7	21.2	3.5	0.20	4.8	0.78	0.28	0.18	141	11.0	6
9.0	630	16.8	11.8	5.4	0.13	7.8	0.48	0.54	0.35	129	16.0	9
12.0	1,025	13.6	10.1	6.6	0.10	10.0	0.39	0.63	0.41	140	22.0	12
18.0	2,300	9.1	6.7	9.8	0.07	14.5	0.26	0.91	0.58	141	33.0	18
26.5	4,000	7.7	5.7	12.8	0.05	19.0	0.20	1.37	0.89	176	45.0	26
32.0	6,500	5.8	4.2	18.7	0.04	24.0	0.16	1.60	1.00	158	57.0	32
40.0	11,000	4.3	3.1	23.3	0.03	30.0	0.13	2.10	1.30	145	75.0	40

Notes: 1. Coil resistance not directly measurable. Coil current should be within limits shown when tested at nominal voltage at 25°C for 5 seconds max.
2. Set base current at 3 mA to 15 mA during measurements.

Ordering Instructions

Catalog-selected Relays: The catalog number is derived by choosing the proper CODE for each of the relay characteristics in the order in which the codes are listed.

Specifying a Part Number Example:	Type	Terminal	Diodes	Coils	Spreader/Mounting Pads
	1MS	C	T	-26	S

* The part number example shown on this page is for catalog items. For a list of specific QPL part numbers, please see the index in Section 15.

Catalog 5-1773450-5
Revised 3-13

www.te.com

Dimensions are shown for reference purposes only. Specifications subject to change.

Dimensions are in millimeters unless otherwise specified.

USA: +1 800 522 6752
Asia Pacific: +86 0 400 820 6015
UK: +44 800 267 666

For additional support numbers please visit www.te.com

Double Pole, Electrically Held, 1 Amp and Less

MA, MAD, MADD

MA

Standard TO-5 High Performance Relay

Qualified to MIL-R-39016/9

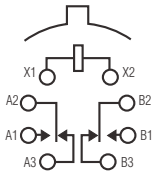

Terminal View

Product Facts

- Hermetically sealed
- High shock & vibration ratings
- Spreader pads
- Excellent RF switching

MAD

Standard TO-5 Diode Suppressed High Performance Relay

Qualified to MIL-R-39016/15

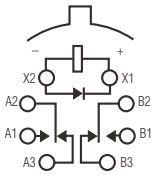

Terminal View

Product Facts

- Suppression diode
- Hermetically sealed
- High shock & vibration ratings
- Spreader pads
- Excellent RF switching

MADD

Standard TO-5 Diode Suppressed/Protected High Performance Relay

Qualified to MIL-R-39016/20

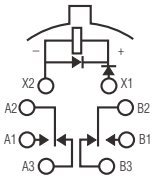

Terminal View

Product Facts

- Suppression & protection diodes
- Hermetically sealed
- High shock & vibration ratings
- Spreader pads
- Excellent RF switching

Electrical Characteristics

Contact Arrangement — 2 Form C (DPDT)

Contact Material — Stationary — Gold/platinum/palladium/silver alloy (gold plated)
Moveable — Gold/platinum/palladium/silver alloy (gold plated)

Contact Resistance — Before Life — 100 milliohms max. (measured @ 10 mA @ 6 Vdc)
After Life — 200 milliohms max. (measured @ 1 A @ 28 Vdc)

Mechanical Life Expectancy — 1 million operations

Coil Voltage — 5 to 30 Vdc (MA/MAD)
5 to 26.5 Vdc (MADD)

Coil Power — 675 mW max. @ 25°C

Duty Cycle — Continuous

Pick-up Voltage — Approximately 50% of nominal coil voltage

Pick-up Sensitivity — 130 mW max. @ 25°C

Contact Ratings

Contact Load	Type	Operations Min.
1.0 A @ 28 Vdc	Resistive	100,000
250 mA @ 115 Vac, 60 Hz & 400 Hz	Resistive (case not grounded)	100,000
100 mA @ 115 Vac, 60 Hz & 400 Hz	Resistive	100,000
0.2 A @ 28 Vdc	Inductive (0.32 Henry)	100,000
0.1 A @ 28 Vdc	Lamp	100,000
30 µA @ 50 mVdc	Low Level	1,000,000
0.1 A @ 28 Vdc	Intermediate Current	50,000

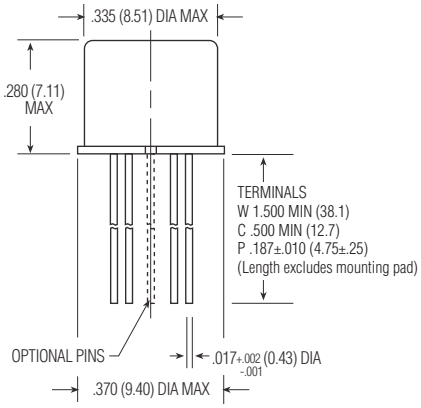

Enclosure

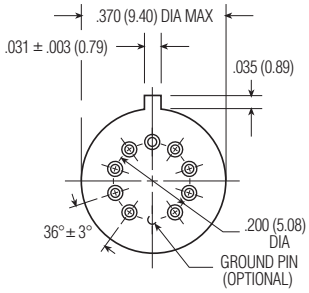

Header

Catalog 5-1773450-5
Revised 3-13

www.te.com

Dimensions are shown for reference purposes only. Specifications subject to change.

Dimensions are in millimeters unless otherwise specified.

USA: +1 800 522 6752
Asia Pacific: +86 0 400 820 6015
UK: +44 800 267 666

For additional support numbers please visit www.te.com

Double Pole, Electrically Held, 1 Amp and Less (Continued)

MA, MAD, MADD (Continued)

Operating Characteristics

Timing —
Operate Time — 2.0 ms max.
Release Time —
MA — 1.5 ms max.
MAD/MADD — 4.0 ms max.
(suppression diode, suppression/steering diodes)

Contact Bounce — 1.5 ms max

Dielectric Withstanding Voltage —
Between Open Contacts —
500 Vrms 60 Hz
Between Adjacent Contacts —
500 Vrms 60 Hz
Between Contacts & Coil —
500 Vrms 60 Hz

Insulation Resistance —
10,000 megohms min. @ 500 Vdc
1,000 megohms @ 500 Vdc
(coil to case @ +125°C)

Environmental Characteristics

Temperature Range —
-65°C to +125°C

Weight —
0.09 oz. (2.55 grms)
0.10 oz. (2.80 grms) with spreader pad attached

Vibration Resistance —
30 G's, 10 to 3,000 Hz

Shock Resistance —
75 G's, 6 ±1 ms max.

QPL Approval —
MIL-R-39016/9 (JMA)
MIL-R-39016/15 (JMAD)
MIL-R-39016/20 (JMADD)

Semiconductor Characteristics

Diode —
100 Vdc peak inverse voltage (PIV)
1.0 Vdc max. transient voltage

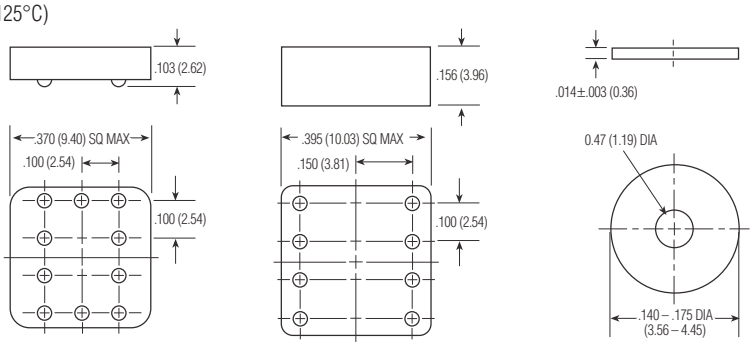

S S2 W

Spreader & Mounting Pads

Coil Data

Nom. Coil Voltage (Vdc)	Coil Resistance in Ohms ±10% @ 25°C (Note 1)	Coil Circuit Current mA (Max.) (Note 1&2)	Coil Circuit Current mA (Min.) (Note 1&2)	Pickup Voltage Vdc (Max.) @ 25°C (Note 2)	Base Turn On Current mA (Max.) @ 25°C	Pickup Voltage Vdc (Max.) @ 125°C (Note 2)	Base Turn On Current mA (Max.) @ 125°C	Drop-Out Voltage Vdc (Min.) @ 25°C (Note 2)	Drop-Out Voltage Vdc (Min.) @ -65°C (Note 2)	Nom. Coil Power (mW) @ 25°C	Max. Coil Voltage	Coil Desig.
MA/MAD												
5.0	50	n/a	n/a	2.7	n/a	3.5	n/a	0.22	0.14	500	5.8	5
6.0	98	n/a	n/a	3.5	n/a	4.5	n/a	0.28	0.18	367	8.0	6
9.0	220	n/a	n/a	5.3	n/a	6.8	n/a	0.54	0.35	368	12.0	9
12.0	390	n/a	n/a	7.0	n/a	9.0	n/a	0.63	0.41	369	16.0	12
18.0	880	n/a	n/a	10.5	n/a	13.5	n/a	0.91	0.59	368	24.0	18
26.5	1,560	n/a	n/a	14.2	n/a	18.0	n/a	1.37	0.89	450	32.0	26
30.0	2,500	n/a	n/a	17.7	n/a	22.0	n/a	1.50	1.00	360	36.0	30
MADD												
5.0	39	128.2	93.2	3.2	n/a	4.0	n/a	0.6	0.6	641	5.8	5
6.0	78	78.3	58.3	4.0	n/a	5.0	n/a	0.7	0.7	462	8.0	6
9.0	220	42.9	33.0	6.3	n/a	7.8	n/a	0.9	0.8	368	12.0	9
12.0	390	32.8	25.6	8.0	n/a	10.0	n/a	1.1	0.9	369	16.0	12
18.0	880	22.1	17.5	11.5	n/a	14.5	n/a	1.4	1.1	368	24.0	18
26.5	1,560	18.5	14.8	15.2	n/a	19.0	n/a	1.8	1.4	450	32.0	26

Notes: 1. Coil resistance not directly measurable. Coil current should be within limits shown when tested at nominal voltage at 25°C for 5 seconds max.
2. Set base current at 3 mA to 15 mA during measurements.

Ordering Instructions

Catalog-selected Relays: The catalog number is derived by choosing the proper CODE for each of the relay characteristics in the order in which the codes are listed.

Specifying a Part Number Example:	Type	Terminal	Diodes	Ground Pins	Coils	Spreader/Mounting Pads
	MA	C	D	G	-26	S

* The part number example shown on this page is for catalog items. For a list of specific QPL part numbers, please see the index in Section 15.

Catalog 5-1773450-5
Revised 3-13

www.te.com

Dimensions are shown for reference purposes only. Specifications subject to change.

Dimensions are in millimeters unless otherwise specified.

USA: +1 800 522 6752
Asia Pacific: +86 0 400 820 6015
UK: +44 800 267 666

For additional support numbers please visit www.te.com

Double Pole, Electrically Held, 1 Amp and Less (Continued)

MS, MSD, MSDD

MS

Sensitive TO-5 High Performance Relay

Qualified to MIL-R-39016/11

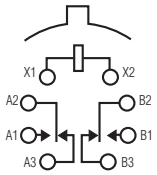

Terminal View

MSD

Sensitive TO-5 Diode Suppressed High Performance Relay

Qualified to MIL-R-39016/16

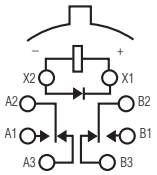

Terminal View

MSDD

Sensitive TO-5 Diode Suppressed/Protected High Performance Relay

Qualified to MIL-R-39016/21

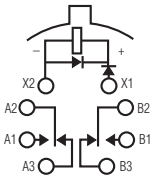

Terminal View

Product Facts

- Hermetically sealed
- High shock & vibration ratings
- Spreader pads
- Excellent RF switching

Product Facts

- Suppression diode
- Hermetically sealed
- High shock & vibration ratings
- Spreader pads
- Excellent RF switching

Product Facts

- Suppression & protection diodes
- Hermetically sealed
- High shock & vibration ratings
- Spreader pads
- Excellent RF switching

Electrical Characteristics

Contact Arrangement — 2 Form C (DPDT)

Contact Material — Stationary — Gold/platinum/palladium/silver alloy (gold plated)
Moveable — Gold/platinum/palladium/silver alloy (gold plated)

Contact Resistance — Before Life — 100 milliohms max. (measured @ 10 mA @ 6 Vdc)
After Life — 200 milliohms max. (measured @ 1 A @ 28 Vdc)

Mechanical Life Expectancy — 1 million operations

Coil Voltage — 5 to 48 Vdc

Coil Power — 565 mW max. @ 25°C

Duty Cycle — Continuous

Pick-up Voltage — Approximately 50% of nominal coil voltage

Pick-up Sensitivity — 60 mW max. @ 25°C

Contact Ratings

Contact Load	Type	Operations Min.
1.0 A @ 28 Vdc	Resistive	100,000
250 mA @ 115 Vac, 60 Hz & 400 Hz	Resistive (case not grounded)	100,000
100 mA @ 115 Vac, 60 Hz & 400 Hz	Resistive	100,000
0.2 A @ 28 Vdc	Inductive (0.32 Henry)	100,000
0.1 A @ 28 Vdc	Lamp	100,000
30 µA @ 50 mVdc	Low Level	1,000,000
0.1 A @ 28 Vdc	Intermediate Current	50,000

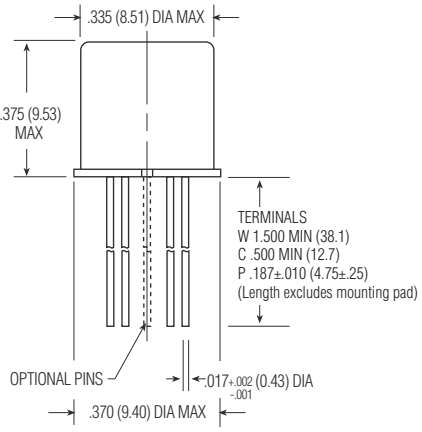

Enclosure

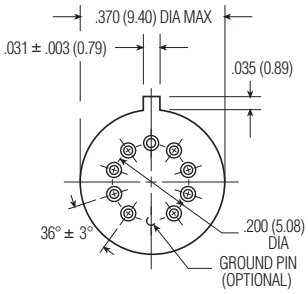

Header

Catalog 5-1773450-5
Revised 3-13

www.te.com

Dimensions are shown for reference purposes only. Specifications subject to change.

Dimensions are in millimeters unless otherwise specified.

USA: +1 800 522 6752
Asia Pacific: +86 0 400 820 6015
UK: +44 800 267 666

For additional support numbers please visit www.te.com

Double Pole, Electrically Held, 1 Amp and Less (Continued)

MS, MSD, MSDD (Continued)

Operating Characteristics

Timing —
Operate Time — 4.0 ms max.
Release Time —
MS — 2.0 ms max.
MSD/MSDD — 7.5 ms max.
(suppression diode, suppression/steering diodes)

Contact Bounce — 1.5 ms max

Dielectric Withstanding Voltage —
Between Open Contacts —
500 Vrms 60 Hz
Between Adjacent Contacts —
500 Vrms 60 Hz
Between Contacts & Coil —
500 Vrms 60 Hz

Insulation Resistance —
10,000 megohms min. @ 500 Vdc
1,000 megohms @ 500 Vdc
(coil to case @ +125°C)

Environmental Characteristics

Temperature Range —
-65°C to +125°C

Weight —
0.12 oz. (3.40 grms)
0.13 oz. (3.45 grms) with spreader pad attached

Vibration Resistance —
30 G's, 10 to 3,000 Hz

Shock Resistance —
75 G's, 6 ±1 ms max.

QPL Approval —
MIL-R-39016/11 (JMS)
MIL-R-39016/16 (JMSD)
MIL-R-39016/21 (JMSDD)

Semiconductor Characteristics

Diode —
100 Vdc peak inverse voltage (PIV)
1.0 Vdc max. transient voltage

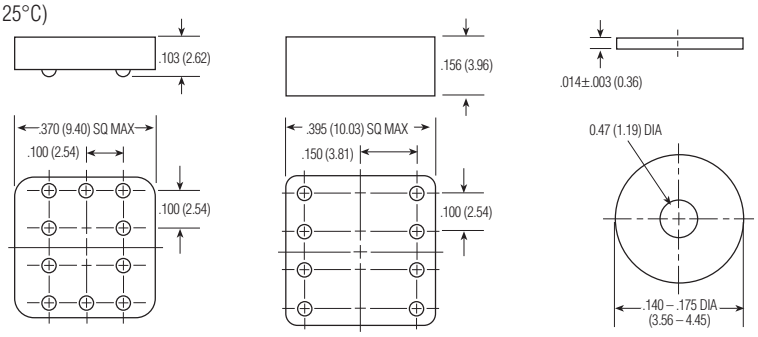

S S2 W

Spreader & Mounting Pads

Coil Data

Nom. Coil Voltage (Vdc)	Coil Resistance in Ohms ±10% @ 25°C (Note 1)	Coil Circuit Current mA (Max.) (Note 1&2)	Coil Circuit Current mA (Min.) (Note 1&2)	Pickup Voltage Vdc (Max.) @ 25°C (Note 2)	Base Turn On Current mA (Max.) @ 25°C	Pickup Voltage Vdc (Max.) @ 125°C (Note 2)	Base Turn On Current mA (Max.) @ 125°C	Drop-Out Voltage Vdc (Min.) @ 25°C (Note 2)	Drop-Out Voltage Vdc (Min.) @ -65°C (Note 2)	Nom. Coil Power (mW) @ 25°C	Max. Coil Voltage	Coil Desig.
MS/MSD												
5.0	100	n/a	n/a	2.6	n/a	3.5	n/a	0.23	0.12	250	7.5	5
6.0	200	n/a	n/a	3.4	n/a	4.5	n/a	0.28	0.18	180	10.0	6
9.0	400	n/a	n/a	4.85	n/a	6.8	n/a	0.55	0.35	203	15.0	9
12.0	850	n/a	n/a	7.0	n/a	9.0	n/a	0.64	0.41	169	20.0	12
18.0	1,600	n/a	n/a	9.8	n/a	13.5	n/a	0.92	0.59	203	30.0	18
26.5	3,300	n/a	n/a	14.0	n/a	18.0	n/a	1.4	0.89	213	40.0	26
36.0	6,500	n/a	n/a	20.0	n/a	27.0	n/a	1.8	1.25	199	57.0	36
48.0	11,000	n/a	n/a	25.8	n/a	36.0	n/a	2.4	1.60	209	75.0	48
MSDD												
5.0	64	78.1	56.8	2.9	n/a	3.7	n/a	0.8	0.7	391	7.0	5
6.0	125	48.9	36.3	4.0	n/a	4.8	n/a	0.9	0.8	288	10.0	6
9.0	400	23.6	18.1	6.1	n/a	8.0	n/a	1.1	0.9	203	15.0	9
12.0	850	15.0	11.7	7.8	n/a	11.0	n/a	1.3	1.0	169	20.0	12
18.0	1,600	12.2	9.6	11.3	n/a	14.5	n/a	1.5	1.1	203	30.0	18
26.5	3,300	8.8	7.0	15.2	n/a	19.0	n/a	1.7	1.3	213	40.0	26
36.0	6,500	6.1	4.9	21.7	n/a	27.2	n/a	2.3	1.7	199	57.0	36
48.0	11,000	4.8	3.9	27.8	n/a	34.8	n/a	2.8	2.0	209	75.0	48

Notes: 1. Coil resistance not directly measurable. Coil current should be within limits shown when tested at nominal voltage at 25°C for 5 seconds max.
2. Set base current at 3 mA to 15 mA during measurements.

Ordering Instructions

Catalog-selected Relays: The catalog number is derived by choosing the proper CODE for each of the relay characteristics in the order in which the codes are listed.

Specifying a Part Number Example:

Type	Terminal	Diodes	Ground Pins	Coils	Spreader/Mounting Pads
MS	C	D	G	-26	S

* The part number example shown on this page is for catalog items. For a list of specific QPL part numbers, please see the index in Section 15.

Dimensions are shown for reference purposes only. Specifications subject to change.

Dimensions are in millimeters unless otherwise specified.

USA: +1 800 522 6752
Asia Pacific: +86 0 400 820 6015
UK: +44 800 267 666

For additional support numbers please visit www.te.com

Double Pole, Electrically Held, 1 Amp and Less (Continued)

HM, HMD, HS, HSD

HM, HS

Standard / Sensitive TO-5 Commercial Relay

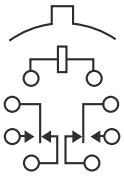

Terminal View

Product Facts

- **Hermetically sealed**
- **Spreader Pads**
- **Excellent RF switching**

HMD, HSD

Standard / Sensitive TO-5 Diode Suppressed Commercial Relay

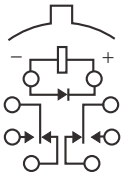

Terminal View

Product Facts

- **Suppression Diode**
- **Hermetically sealed**
- **Spreader Pads**
- **Excellent RF switching**

Electrical Characteristics

Contact Arrangement —
2 Form C (DPDT)

Contact Material —
Stationary —
Gold/platinum/palladium/silver alloy (gold plated)
Moveable —
Gold/platinum/palladium/silver alloy (gold plated)

Contact Resistance —
Before Life — 100 milliohms max. (measured @ 10 mA @ 6 Vdc)
After Life — 200 milliohms max. (measured @ 1 A @ 28 Vdc)

Mechanical Life Expectancy —
1 million operations

Electrical Characteristics

Coil Voltage —
5 to 30 Vdc (HM/HMD)
5 to 48 Vdc (HS/HSD)

Coil Power —
HM/HMD — 675 mW max. @ 25°C
HS/HSD — 565 mW max. @ 25°C

Duty Cycle — Continuous

Pick-up Voltage — Approximately 70% of nominal coil voltage

Pick-up Sensitivity —
HM/HMD — 180 mW max. @ 25°C
HS/HSD — 90 mW max. @ 25°C

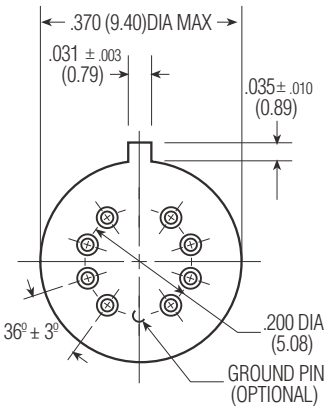

Header

Contact Ratings

Contact Load	Type	Operations Min.
1.0 A @ 28 Vdc	Resistive	100,000
250 mA @ 115 Vac, 60 Hz & 400 Hz	Resistive (Case not grounded)	100,000
100 mA @ 115 Vac, 60 Hz & 400 Hz	Resistive	100,000
0.2 A @ 28 Vdc	Inductive (0.32 Henry)	100,000
0.1 A @ 28 Vdc	Lamp	100,000
30 µA @ 50 mVdc	Low Level	1,000,000

Dimensions are shown for reference purposes only. Specifications subject to change.

Dimensions are in millimeters unless otherwise specified.

USA: +1 800 522 6752
Asia Pacific: +86 0 400 820 6015
UK: +44 800 267 666

For additional support numbers please visit www.te.com

Double Pole, Electrically Held, 1 Amp and Less (Continued)

HM, HMD, HS, HSD
(Continued)

Operating Characteristics

Timing —
Operate Time —
HM/HMD — 4.0 ms max.
HS/HSD — 6.0 ms max.
Release Time —
HM — 3.0 ms max.
HS — 3.0 ms max.
HMD — 6.0 ms max.
(suppression diode)
HSD — 7.5 ms max.
(suppression diode)

Dielectric Withstanding Voltage —
Between Open Contacts —
350 Vrms 60 Hz
Between Adjacent Contacts —
350 Vrms 60 Hz
Between Contacts & Coil —
350 Vrms 60 Hz

Insulation Resistance —
1,000 megohms @ 500 Vdc

Environmental Characteristics

Temperature Range —
-55°C to +85°C

Weight —
HM/HMD —
0.09 oz. (2.55 gms)
0.099 oz. (2.80 gms) w/ spreader pad
HS/HSD —
0.12 oz. (3.40 gms)
0.129 oz. (3.45 gms) w/ spreader pad

Vibration Resistance —
10 G's, 10 to 500 Hz

Shock Resistance —
30 G's, 6 ±1 ms

Semiconductor Characteristics

Diode —
100 Vdc peak inverse voltage (PIV)
1.0 Vdc max. transient voltage

Standard Coil Data

	Nom. Coil Voltage (Vdc)	Coil Resistance in Ohms ±20% @ 25°C	Pickup Voltage Vdc (max.) @ 25°C	Nom. Coil Power (mW) @ 25°C	Max. Coil Voltage	Coil Desig.
HM/HMD	5.0	50	3.6	500	5.8	5
	6.0	98	4.2	367	8.0	6
	9.0	220	6.5	368	12.0	9
	12.0	390	8.4	369	16.0	12
	18.0	880	13.0	368	24.0	18
	26.5	1,560	17.0	450	32.0	26
	30.0	2,500	22.0	360	36.0	30
HS/HSD	5.0	100	3.5	250	7.5	5
	6.0	200	4.5	180	10.0	6
	9.0	400	6.8	203	15.0	9
	12.0	850	9.0	169	20.0	12
	18.0	1,600	13.5	203	30.0	18
	26.5	3,300	18.0	213	40.0	26
	36.0	6,500	24.0	199	57.0	36
	48.0	11,000	32.0	209	75.0	48

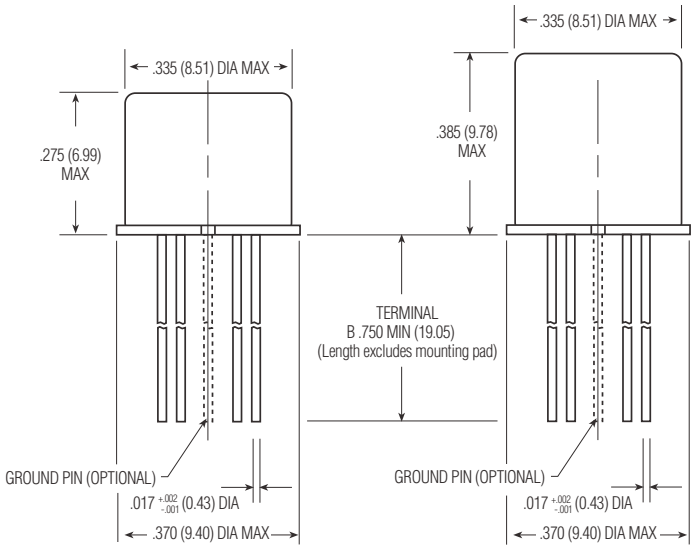

HM/HMD Enclosure HS/HSD Enclosure

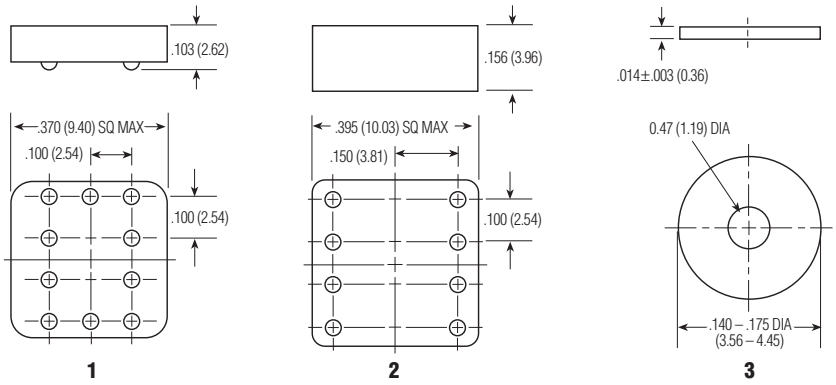

Spreader and Mounting Pads

Ordering Instructions

Catalog-selected Relays: The catalog number is derived by choosing the proper CODE for each of the relay characteristics in the order in which the codes are listed.

Specifying a Part Number Example:

Type	Diodes	Ground Pin	Spreader/Mounting Pads	Coils	Terminals
HM	D	X	3	-26	B

Dimensions are shown for reference purposes only. Specifications subject to change.

Dimensions are in millimeters unless otherwise specified.

USA: +1 800 522 6752
Asia Pacific: +86 0 400 820 6015
UK: +44 800 267 666

For additional support numbers please visit www.te.com

Double Pole, Electrically Held, 1 Amp and Less (Continued)

MGA, MGAD, MGADD

MGA

Standard .100 Grid High Performance Relay

Qualified to MIL-R-39016/17

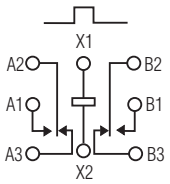

Terminal View

Product Facts

- Hermetically sealed
- High shock & vibration ratings
- Mounting pads
- Excellent RF switching

MGAD

Standard .100 Grid Diode Suppressed High Performance Relay

Qualified to MIL-R-39016/18

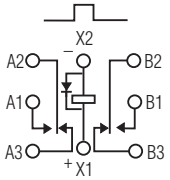

Terminal View

Product Facts

- Suppression diode
- Hermetically sealed
- High shock & vibration ratings
- Mounting pads
- Excellent RF switching

MGADD

Standard .100 Grid Diode Suppressed/Protected High Performance Relay

Qualified to MIL-R-39016/19

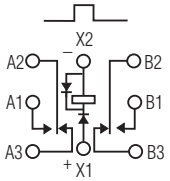

Terminal View

Product Facts

- Suppression & protection diodes
- Hermetically sealed
- High shock & vibration ratings
- Mounting pads
- Excellent RF switching

Electrical Characteristics

Contact Arrangement — 2 Form C (DPDT)

Contact Material — Stationary — Gold/platinum/palladium/silver (gold plated) Moveable — Gold/platinum/palladium/silver (gold plated)

Contact Resistance — Before Life — 100 milliohms max. (measured @ 10 mA @ 6 Vdc) After Life — 200 milliohms max. (measured @ 1 A @ 28 Vdc)

Mechanical Life Expectancy — 1 million operations

Coil Voltage — 5 to 26.5 Vdc

Coil Power — 660 mW max. @ 25°C

Duty Cycle — Continuous

Pick-up Voltage — Approximately 50% of nominal coil voltage

Pick-up Sensitivity — 130 mW max. @ 25°C

Contact Ratings

Contact Load	Type	Operations Min.
1.0 A @ 28 Vdc	Resistive	100,000
250 mA @ 115 Vac, 60 Hz & 400 Hz	Resistive (case not grounded)	100,000
100 mA @ 115 Vac, 60 Hz & 400 Hz	Resistive	100,000
0.2 A @ 28 Vdc	Inductive (0.32 Henry)	100,000
0.1 A @ 28 Vdc	Lamp	100,000
30 µA @ 50 mVdc	Low Level	1,000,000
0.1 A @ 28 Vdc	Intermediate Current	50,000

MGA

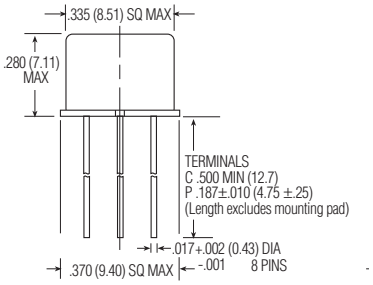

MGA/MGAD/MGADD Enclosure

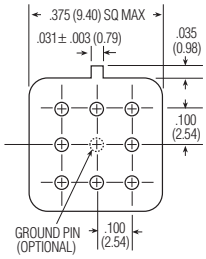

MGA/MGAD/MGADD Header

Catalog 5-1773450-5
Revised 3-13

www.te.com

Dimensions are shown for reference purposes only. Specifications subject to change.

Dimensions are in millimeters unless otherwise specified.

USA: +1 800 522 6752
Asia Pacific: +86 0 400 820 6015
UK: +44 800 267 666

For additional support numbers please visit www.te.com

Double Pole, Electrically Held, 1 Amp and Less (Continued)

MGA, MGAD, MGADD
(Continued)

Operating Characteristics

Timing —
Operate Time — 2.0 ms max.
Release Time —
MGA — 1.5 ms max.
MGAD/MGADD — 4.0 ms max.
(suppression diode, protection/ suppression diodes)

Contact Bounce — 1.5 ms max.

Dielectric Withstanding Voltage —
Between Open Contacts —
500 Vrms 60 Hz
Between Adjacent Contacts —
500 Vrms 60 Hz
Between Contacts & Coil —
500 Vrms 60 Hz

Insulation Resistance —
10,000 megohms min. @ 500 Vdc
1,000 megohms @ 500 Vdc
(coil to case @ +125°C)

Environmental Characteristics

Temperature Range —
-65°C to +125°C

Weight —
0.09 oz. (2.55 gms)
0.129 oz. (3.45 gms) w/ mounting pad attached

Vibration Resistance —
30 G's, 10 to 3,000 Hz

Shock Resistance —
75 G's, 6 ±1 ms max.

QPL Approval —
MIL-R-39016/17 (JMGA)
MIL-R-39016/18 (JMGAD)
MIL-R-39016/19 (JMGADD)

Semiconductor Characteristics

Diode —
100 Vdc peak inverse voltage (PIV)
1.0 Vdc max. transient voltage

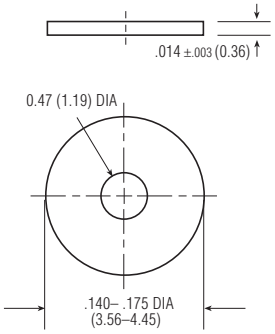

MGA/MGAD/MGADD Mounting Pad

Coil Data

Nom. Coil Voltage (Vdc)	Coil Resistance in Ohms ±10% @ 25°C (Note)	Coil Circuit Current mA (Max.) (Note)	Coil Circuit Current mA (Min.) (Note)	Pickup Voltage Vdc (Max.) @ 25°C	Pickup Voltage Vdc (Max.) @ 125°C	Drop-Out Voltage Vdc (Min.) @ 25°C	Drop-Out Voltage Vdc (Min.) @ -65°C	Nom. Coil Power (mW) @ 25°C	Max. Coil Voltage	Coil Desig.
MGA/MGAD										
5.0	50	n/a	n/a	2.7	3.5	0.22	0.14	500	5.8	5
6.0	98	n/a	n/a	3.5	4.5	0.28	0.18	367	8.0	6
9.0	220	n/a	n/a	5.3	6.8	0.54	0.35	368	12.0	9
12.0	390	n/a	n/a	7.0	9.0	0.63	0.41	369	16.0	12
18.0	880	n/a	n/a	10.5	13.5	0.91	0.59	368	24.0	18
26.5	1,560	n/a	n/a	14.2	18.0	1.37	0.89	450	32.0	26
MGADD										
5.0	39	128.2	93.2	3.2	4.0	0.6	0.6	641	5.8	5
6.0	78	78.3	58.3	4.0	5.0	0.7	0.7	462	8.0	6
9.0	220	42.9	33.0	6.3	7.8	0.9	0.8	368	12.0	9
12.0	390	32.8	25.6	8.0	10.0	1.1	0.9	369	16.0	12
18.0	880	22.1	17.5	11.5	14.5	1.4	1.1	368	24.0	18
26.5	1,560	18.5	14.8	15.2	19.0	1.8	1.4	450	32.0	26

Note: Coil resistance not directly measurable. Coil current should be within limits shown when tested at nominal voltage at 25°C for 5 seconds max.

Ordering Instructions

Catalog-selected Relays: The catalog number is derived by choosing the proper CODE for each of the relay characteristics in the order in which the codes are listed.

Specifying a Part Number Example:	Type	Terminals	Diodes	Ground Pins	Coils	Mounting Pads
	MGA	C	D	G	-26	W

* The part number example shown on this page is for catalog items. For a list of specific QPL part numbers, please see the index in Section 15.

Dimensions are shown for reference purposes only. Specifications subject to change.

Dimensions are in millimeters unless otherwise specified.

USA: +1 800 522 6752
Asia Pacific: +86 0 400 820 6015
UK: +44 800 267 666

For additional support numbers please visit www.te.com

Double Pole, Electrically Held, 1 Amp and Less (Continued)

MGS, MGSD, MGSDD

MGS

Sensitive .100 Grid High Performance Relay

Qualified to MIL-R-39016/41

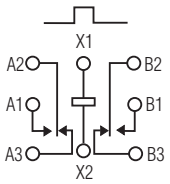

Terminal View

Product Facts

- Hermetically sealed
- High shock & vibration ratings
- Mounting pads
- Excellent RF switching

MGSD

Sensitive .100 Grid Diode Suppressed High Performance Relay

Qualified to MIL-R-39016/42

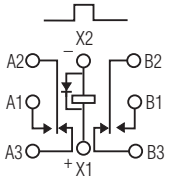

Terminal View

Product Facts

- Suppression diode
- Hermetically sealed
- High shock & vibration ratings
- Mounting pads
- Excellent RF switching

MGSDD

Sensitive .100 Grid Diode Suppressed/Protected High Performance Relay

Qualified to MIL-R-39016/43

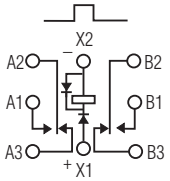

Terminal View

Product Facts

- Suppression & protection diodes
- Hermetically sealed
- High shock & vibration ratings
- Mounting pads
- Excellent RF switching

Electrical Characteristics

Contact Arrangement — 2 Form C (DPDT)

Contact Material — Stationary — Gold/platinum/palladium/silver (gold plated)
Moveable — Gold/platinum/palladium/silver (gold plated)

Contact Resistance — Before Life — 100 milliohms max. (measured @ 10 mA @ 6 Vdc)
After Life — 200 milliohms max. (measured @ 1 A @ 28 Vdc)

Mechanical Life Expectancy — 1 million operations

Coil Voltage — 5 to 48 Vdc

Coil Power — 565 mW max. @ 25°C

Duty Cycle — Continuous

Pick-up Voltage — Approximately 50% of nominal coil voltage

Pick-up Sensitivity — 60 mW max. @ 25°C

Contact Ratings

Contact Load	Type	Operations Min.
1.0 A @ 28 Vdc	Resistive	100,000
250 mA @ 115 Vac, 60 Hz & 400 Hz	Resistive (case not grounded)	100,000
100 mA @ 115 Vac, 60 Hz & 400 Hz	Resistive	100,000
0.2 A @ 28 Vdc	Inductive (0.32 Henry)	100,000
0.1 A @ 28 Vdc	Lamp	100,000
30 µA @ 50 mVdc	Low Level	1,000,000
0.1 A @ 28 Vdc	Intermediate Current	50,000

MGS

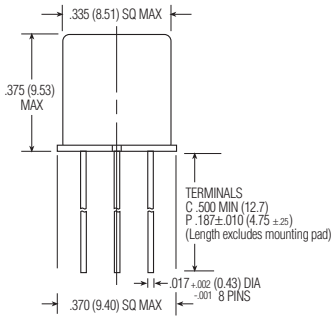

MGS/MGSD/MGSDD Enclosure

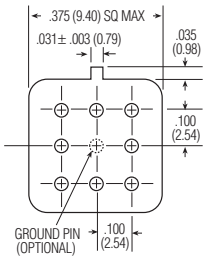

MGS/MGSD/MGSDD Header

Catalog 5-1773450-5
Revised 3-13

www.te.com

Dimensions are shown for reference purposes only. Specifications subject to change.

Dimensions are in millimeters unless otherwise specified.

USA: +1 800 522 6752
Asia Pacific: +86 0 400 820 6015
UK: +44 800 267 666

For additional support numbers please visit www.te.com

Double Pole, Electrically Held, 1 Amp and Less (Continued)

MGS, MGSD, MGSDD
(Continued)

Operating Characteristics

Timing —
Operate Time — 4.0 ms max.
Release Time —
MGS — 2.0 ms max.
MGSD/MGSDD — 7.5 ms max.
(suppression diode, protection/ suppression diodes)

Contact Bounce — 1.5 ms max.

Dielectric Withstanding Voltage —
Between Open Contacts —
500 Vrms 60 Hz
Between Adjacent Contacts —
500 Vrms 60 Hz
Between Contacts & Coil —
500 Vrms 60 Hz

Insulation Resistance —
10,000 megohms min. @ 500 Vdc
1,000 megohms @ 500 Vdc
(coil to case @ +125°C)

Environmental Characteristics

Temperature Range —
-65°C to +125°C

Weight —
0.09 oz. (2.55 gms)
0.129 oz. (3.45 gms) w/ mounting pad attached

Vibration Resistance —
30 G's, 10 to 3,000 Hz

Shock Resistance —
75 G's, 6 ±1 ms max.

QPL Approval —
MIL-R-39016/41 (JMGS)
MIL-R-39016/42 (JMGSD)
MIL-R-39016/43 (JMGSDD)

Semiconductor Characteristics

Diode —
100 Vdc peak inverse voltage (PIV)
1.0 Vdc max. transient voltage

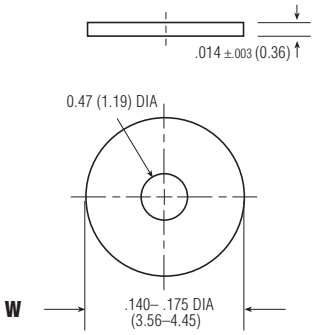

MGS/MGSD/MGSDD Mounting Pad

Coil Data

Nom. Coil Voltage (Vdc)	Coil Resistance in Ohms ±10% @ 25°C (Note)	Coil Circuit Current mA (Max.) (Note)	Coil Circuit Current mA (Min.) (Note)	Pickup Voltage Vdc (Max.) @ 25°C	Pickup Voltage Vdc (Max.) @ 125°C	Drop-Out Voltage Vdc (Min.) @ 25°C	Drop-Out Voltage Vdc (Min.) @ -65°C	Nom. Coil Power (mW) @ 25°C	Max. Coil Voltage	Coil Desig.
MGS/MGSD										
5.0	100	n/a	n/a	2.6	3.5	0.23	0.12	250	7.5	5
6.0	200	n/a	n/a	3.4	4.5	0.28	0.18	180	10.0	6
9.0	400	n/a	n/a	4.85	6.8	0.55	0.35	203	15.0	9
12.0	800	n/a	n/a	7.0	9.0	0.64	0.41	180	20.0	12
18.0	1,600	n/a	n/a	9.8	13.5	0.92	0.59	203	30.0	18
26.5	3,200	n/a	n/a	14.0	18.0	1.4	0.89	219	40.0	26
36.0	6,500	n/a	n/a	20.0	27.0	1.8	1.25	199	57.0	36
48.0	11,000	n/a	n/a	25.8	36.0	2.4	1.60	209	75.0	48
MGSDD										
5.0	64	78.1	56.8	2.9	3.7	0.8	0.7	391	7.5	5
6.0	125	48.9	36.3	4.0	4.8	0.9	0.8	288	10.0	6
9.0	400	23.6	18.1	6.1	8.0	1.1	0.9	203	15.0	9
12.0	800	16.0	12.5	7.8	11.0	1.3	1.0	180	20.0	12
18.0	1,600	12.2	9.6	11.3	14.5	1.5	1.1	203	30.0	18
26.5	3,200	9.0	7.2	15.2	19.0	1.7	1.3	219	40.0	26
36.0	6,500	6.1	4.9	21.7	27.2	2.3	1.7	199	57.0	36
48.0	11,000	4.8	3.9	27.8	34.8	2.8	2.0	209	75.0	48

Note: Coil resistance not directly measurable. Coil current should be within limits shown when tested at nominal voltage at 25°C for 5 seconds max.

Ordering Instructions

Catalog-selected Relays: The catalog number is derived by choosing the proper CODE for each of the relay characteristics in the order in which the codes are listed.

Specifying a Part Number Example:	Type	Terminals	Diodes	Ground Pins	Coils	Mounting Pads
	MGS	C	D	G	-26	W

* The part number example shown on this page is for catalog items. For a list of specific QPL part numbers, please see the index in Section 15.

Dimensions are shown for reference purposes only. Specifications subject to change.

Dimensions are in millimeters unless otherwise specified.

USA: +1 800 522 6752
Asia Pacific: +86 0 400 820 6015
UK: +44 800 267 666

For additional support numbers please visit www.te.com

Double Pole, Electrically Held, 1 Amp and Less (Continued)

HC, HCD, HCS, HCSD

HC, HCS

Standard / Sensitive
.100 Grid Commercial Relay

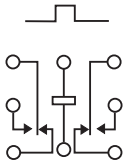

Terminal View

Product Facts

- Hermetically sealed
- Mounting pads
- Excellent RF switching

HCD, HCSD

Standard / Sensitive
.100 Grid Diode Suppressed
Commercial Relay

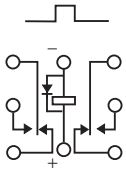

Terminal View

Product Facts

- Suppression diode
- Hermetically sealed
- Mounting pads
- Excellent RF switching

Electrical Characteristics

Contact Arrangement —
2 Form C (DPDT)

Contact Material —
Stationary —
Gold/platinum/palladium/silver alloy (gold plated)
Moveable —
Gold/platinum/palladium/silver alloy (gold plated)

Contact Resistance —
Before Life — 100 milliohms max. (measured @ 10 mA @ 6 Vdc)
After Life — 200 milliohms max. (measured @ 1 A @ 28 Vdc)

Mechanical Life Expectancy —
1 million operations

Coil Voltage —
5 to 26.5 Vdc (HC/HCD)
5 to 48 Vdc (HCS/HCSD)

Coil Power —
HC/HCD — 660 mW max. @ 25°C
HCS/HCSD — 565 mW max. @ 25°C

Duty Cycle — Continuous

Pick-up Voltage — Approximately 70% of nominal coil voltage

Pick-up Sensitivity —
HC/HCD — 180 mW max. @ 25°C
HCS/HCSD — 90 mW max. @ 25°C

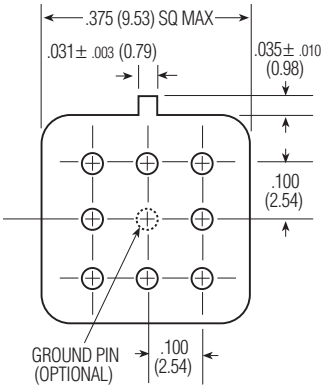

Header

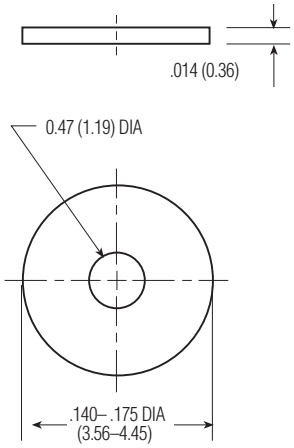

Mounting Pad

Contact Ratings

Contact Load	Type	Operations Min.
1.0 A @ 28 Vdc	Resistive	100,000
250 mA @ 115 Vac, 60 Hz & 400 Hz	Resistive (Case not grounded)	100,000
100 mA @ 115 Vac, 60 Hz & 400 Hz	Resistive	100,000
0.2 A @ 28 Vdc	Inductive (0.32 Henry)	100,000
0.1 A @ 28 Vdc	Lamp	100,000
30 µA @ 50 mVdc	Low Level	1,000,000

Catalog 5-1773450-5
Revised 3-13

www.te.com

Dimensions are shown for reference purposes only. Specifications subject to change.

Dimensions are in millimeters unless otherwise specified.

USA: +1 800 522 6752
Asia Pacific: +86 0 400 820 6015
UK: +44 800 267 666

For additional support numbers please visit www.te.com

Double Pole, Electrically Held, 1 Amp and Less (Continued)

HC, HCD, HCS, HCSD
(Continued)

Operating Characteristics

Timing —
Operate Time —
HC/HCD — 4.0 ms max.
HCS/HCSD — 6.0 ms max.
Release Time —
HC — 3.0 ms max.
HCS — 3.0 ms max.
HCD — 6.0 ms max.
(suppression diode)
HCSD — 7.5 ms max.
(suppression diode)

Dielectric Withstanding Voltage —
Between Open Contacts —
350 Vrms 60 Hz
Between Adjacent Contacts —
350 Vrms 60 Hz
Between Contacts & Coil —
350 Vrms 60 Hz

Insulation Resistance —
1,000 megohms @ 500 Vdc

Environmental Characteristics

Temperature Range —
-55°C to +85°C

Weight —
HC/HCD —
0.09 oz. (2.55 gms)
HCS/HCSD —
0.15 oz. (4.30 gms)

Vibration Resistance —
10 G's, 10 to 500 Hz

Shock Resistance —
30 G's, 6 ±1 ms

Semiconductor Characteristics

Diode —
100 Vdc peak inverse voltage (PIV)
1.0 Vdc max. transient voltage

Standard Coil Data

	Nom. Coil Voltage (Vdc)	Coil Resistance in Ohms ±20% @ 25°C	Pickup Voltage Vdc (Max.) @ 25°C	Nom. Coil Power (mW) @ 25°C	Max. Coil Voltage	Coil Desig.
HC/HCD	5.0	64	3.8	391	5.8	5
	6.0	98	4.9	367	8.0	6
	9.0	220	7.0	368	12.0	9
	12.0	400	9.0	360	16.0	12
	18.0	880	14.0	368	24.0	18
	26.5	1,600	18.0	439	32.0	26
HCS/HCSD	5.0	100	3.5	250	7.5	5
	6.0	200	4.5	180	10.0	6
	9.0	400	6.8	203	15.0	9
	12.0	800	9.0	180	20.0	12
	18.0	1,600	13.5	203	30.0	18
	26.5	3,200	18.0	219	40.0	26
	36.0	6,500	24.0	199	57.0	36
	48.0	11,000	32.0	209	75.0	48

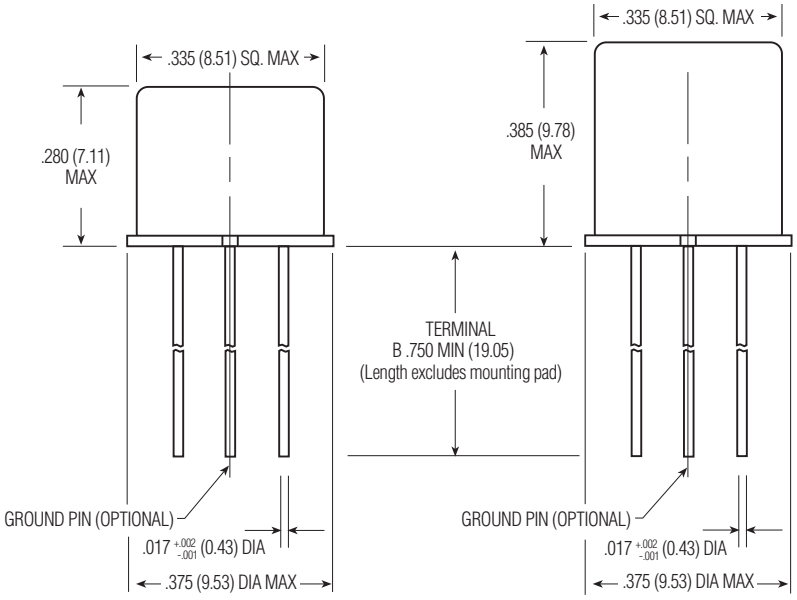

HC/HCD Enclosure **HCS/HCSD Enclosure**

Ordering Instructions

Catalog-selected Relays: The catalog number is derived by choosing the proper CODE for each of the relay characteristics in the order in which the codes are listed.

Specifying a Part Number Example:	Type	Diodes	Ground Pin	Mounting Pads	Coils	Terminals
	HC	D	X	3	-26	B

Catalog 5-1773450-5
Revised 3-13

www.te.com

Dimensions are shown for reference purposes only. Specifications subject to change.

Dimensions are in millimeters unless otherwise specified.

USA: +1 800 522 6752
Asia Pacific: +86 0 400 820 6015
UK: +44 800 267 666

For additional support numbers please visit www.te.com

Double Pole, Electrically Held, 1 Amp and Less (Continued)

MAT

MAT

Standard TO-5
Diode Suppressed/
Transistor Driven
High Performance Relay

Qualified to MIL-R-28776/1

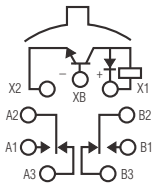

Terminal View

Product Facts

- **Transistor driver & suppression diode**
- **Hermetically sealed**
- **High shock & vibration ratings**
- **Spreader pads**
- **Excellent RF switching**

Electrical Characteristics

Contact Arrangement — 2 Form C (DPDT)

Contact Material — Stationary — Gold/platinum/palladium/silver alloy (gold plated)
Moveable — Gold/platinum/palladium/silver alloy (gold plated)

Contact Resistance — Before Life — 100 milliohms max. (measured @ 10 mA @ 6 Vdc)
After Life — 200 milliohms max. (measured @ 1 A @ 28 Vdc)

Mechanical Life Expectancy — 1 million operations

Coil Voltage — 5 to 26.5 Vdc

Coil Power — 675 mW max. @ 25°C

Duty Cycle — Continuous

Pick-up Voltage — Approximately 50% of nominal coil voltage

Pick-up Sensitivity — 130 mW max. @ 25°C

Contact Ratings

Contact Load	Type	Operations Min.
1.0 A @ 28 Vdc	Resistive	100,000
250 mA @ 115 Vac, 60 Hz & 400 Hz	Resistive (case not grounded)	100,000
100 mA @ 115 Vac, 60 Hz & 400 Hz	Resistive	100,000
0.2 A @ 28 Vdc	Inductive (0.32 Henry)	100,000
0.1 A @ 28 Vdc	Lamp	100,000
30 µA @ 50 mVdc	Low Level	1,000,000
0.1 A @ 28 Vdc	Intermediate Current	50,000

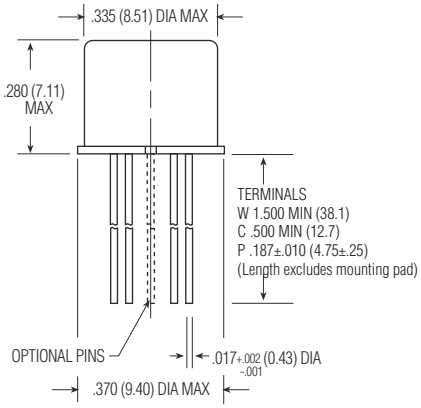

Enclosure

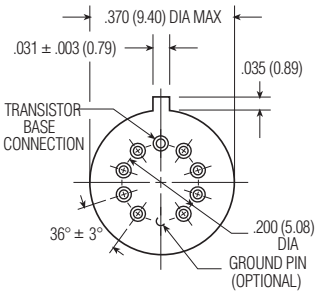

Header

Catalog 5-1773450-5
Revised 3-13

www.te.com

Dimensions are shown for reference purposes only. Specifications subject to change.

Dimensions are in millimeters unless otherwise specified.

USA: +1 800 522 6752
Asia Pacific: +86 0 400 820 6015
UK: +44 800 267 666

For additional support numbers please visit www.te.com

Double Pole, Electrically Held, 1 Amp and Less (Continued)

MAT (Continued)

Operating Characteristics

Timing —
Operate Time — 2.0 ms max.
Release Time — 7.5 ms max.

Contact Bounce — 1.5 ms max

Dielectric Withstanding Voltage —
Between Open Contacts —
500 Vrms 60 Hz
Between Adjacent Contacts —
500 Vrms 60 Hz
Between Contacts & Coil —
500 Vrms 60 Hz

Insulation Resistance —
10,000 megohms @ 500 Vdc
1,000 megohms @ 500 Vdc
(coil to case @ +125°C)

Environmental Characteristics

Temperature Range —
-65°C to +125°C

Weight —
0.09 oz. (2.55 grms)
0.10 oz. (2.80 grms) with spreader pad attached

Vibration Resistance —
30 G's, 10 to 3,000 Hz

Shock Resistance —
75 G's, 6 ±1 ms max.

QPL Approval —
MIL-R-28776/1 (JMAT)

Semiconductor Characteristics

Diode —
100 Vdc peak inverse voltage (PIV)
1.0 Vdc max. transient voltage

Transistor —
0.3 Vdc min. base turn off voltage;
6.0 Vdc min. emitter-base breakdown voltage (BV_{EBO}) @ 25°C;
80.0 Vdc min. collector-base breakdown voltage (BV_{CBO}) @ 25°C & I_C=100 µA

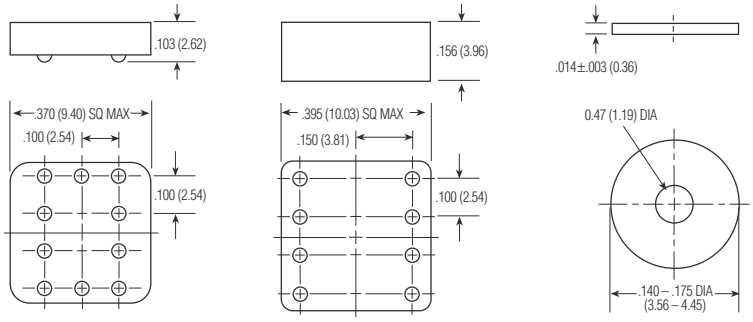

S **S2** **W**

Spreader & Mounting Pads

Coil Data

Nom. Coil Voltage (Vdc)	Coil Resistance in Ohms ±10% @ 25°C (Note 1)	Coil Circuit Current mA (Max.) (Note 1&2)	Coil Circuit Current mA (Min.) (Note 1&2)	Pickup Voltage Vdc (Max.) @ 25°C (Note 2)	Base Turn On Current mA (Max.) @ 25°C	Pickup Voltage Vdc (Max.) @ 125°C (Note 2)	Base Turn On Current mA (Max.) @ 125°C	Drop-Out Voltage Vdc (Min.) @ 25°C (Note 2)	Drop-Out Voltage Vdc (Min.) @ -65°C (Note 2)	Nom. Coil Power (mW) @ 25°C	Max. Coil Voltage	Coil Desig.
MAT												
5.0	50	112.1	82.2	2.7	0.75	3.5	3.00	0.22	0.14	500	5.8	5
6.0	98	69.9	52.9	3.5	0.55	4.5	2.04	0.28	0.18	367	8.0	6
9.0	220	47.4	35.3	5.3	0.36	6.8	1.36	0.54	0.35	368	12.0	9
12.0	390	35.8	26.6	7.0	0.27	9.0	1.03	0.63	0.41	369	16.0	12
18.0	880	24.0	17.9	10.5	0.16	13.5	0.68	0.91	0.59	368	24.0	18
26.5	1,560	19.8	14.7	14.2	0.13	18.0	0.50	1.37	0.89	450	32.0	26

Notes: 1. Coil resistance not directly measurable. Coil current should be within limits shown when tested at nominal voltage at 25°C for 5 seconds max.
2. Set base current at 3 mA to 15 mA during measurements.

Ordering Instructions

Catalog-selected Relays: The catalog number is derived by choosing the proper CODE for each of the relay characteristics in the order in which the codes are listed.

Specifying a Part Number Example:

Type	Terminal	Diodes	Ground Pins	Coils	Spreader/Mounting Pads
MA	C	T	G	-26	S

* The part number example shown on this page is for catalog items. For a list of specific QPL part numbers, please see the index in Section 15.

Catalog 5-1773450-5
Revised 3-13

www.te.com

Dimensions are shown for reference purposes only. Specifications subject to change.

Dimensions are in millimeters unless otherwise specified.

USA: +1 800 522 6752
Asia Pacific: +86 0 400 820 6015
UK: +44 800 267 666

For additional support numbers please visit www.te.com

Double Pole, Electrically Held, 1 Amp and Less (Continued)

MST

MST

Sensitive TO-5
Diode Suppressed/
Transistor Driven
High Performance Relay

Qualified to MIL-R-28776/3

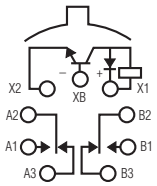

Terminal View

Product Facts

- **Transistor driver & suppression diode**
- **Hermetically sealed**
- **High shock & vibration ratings**
- **Spreader pads**
- **Excellent RF switching**

Electrical Characteristics

Contact Arrangement — 2 Form C (DPDT)

Contact Material — Stationary — Gold/platinum/palladium/silver alloy (gold plated)
Moveable — Gold/platinum/palladium/silver alloy (gold plated)

Contact Resistance — Before Life — 100 milliohms max. (measured @ 10 mA @ 6 Vdc)
After Life — 200 milliohms max. (measured @ 1 A @ 28 Vdc)

Mechanical Life Expectancy — 1 million operations

Coil Voltage — 5 to 48 Vdc

Coil Power — 565 mW max. @ 25°C

Duty Cycle — Continuous

Pick-up Voltage — Approximately 50% of nominal coil voltage

Pick-up Sensitivity — 60 mW max. @ 25°C

Contact Ratings

Contact Load	Type	Operations Min.
1.0 A @ 28 Vdc	Resistive	100,000
250 mA @ 115 Vac, 60 Hz & 400 Hz	Resistive (case not grounded)	100,000
100 mA @ 115 Vac, 60 Hz & 400 Hz	Resistive	100,000
0.2 A @ 28 Vdc	Inductive (0.32 Henry)	100,000
0.1 A @ 28 Vdc	Lamp	100,000
30 µA @ 50 mVdc	Low Level	1,000,000
0.1 A @ 28 Vdc	Intermediate Current	50,000

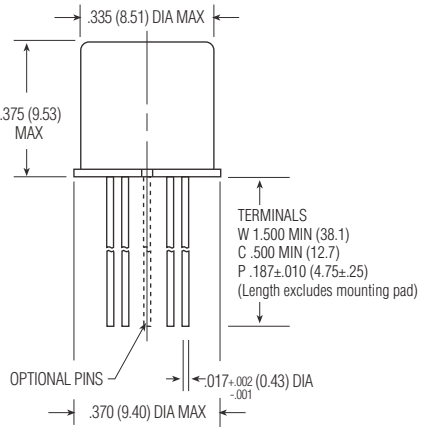

Enclosure

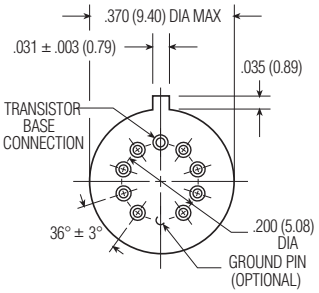

Header

Catalog 5-1773450-5
Revised 3-13

www.te.com

Dimensions are shown for reference purposes only. Specifications subject to change.

Dimensions are in millimeters unless otherwise specified.

USA: +1 800 522 6752
Asia Pacific: +86 0 400 820 6015
UK: +44 800 267 666

For additional support numbers please visit www.te.com

Double Pole, Electrically Held, 1 Amp and Less (Continued)

MST (Continued)

Operating Characteristics

Timing —
Operate Time — 4.0 ms max.
Release Time — 7.5 ms max.

Contact Bounce — 1.5 ms max

Dielectric Withstanding Voltage —
Between Open Contacts —
500 Vrms 60 Hz
Between Adjacent Contacts —
500 Vrms 60 Hz
Between Contacts & Coil —
500 Vrms 60 Hz

Insulation Resistance —
10,000 megohms min. @ 500 Vdc
1,000 megohms @ 500 Vdc
(coil to case @ +125°C)

Environmental Characteristics

Temperature Range —
-65°C to +125°C

Weight —
0.12 oz. (3.40 grms)
0.13 oz. (3.45 grms) with spreader pad attached

Vibration Resistance —
30 G's, 10 to 3,000 Hz

Shock Resistance —
75 G's, 6 ±1 ms max.

QPL Approval —
MIL-R-28776/3 (JMST)

Semiconductor Characteristics

Diode —
100 Vdc peak inverse voltage (PIV)
1.0 Vdc max. transient voltage

Transistor —
0.3 Vdc min. base turn off voltage;
6.0 Vdc min. emitter-base breakdown voltage (BV_{EBO}) @ 25°C;
80.0 Vdc min. collector-base breakdown voltage (BV_{CBO}) @ 25°C & I_C=100 µA

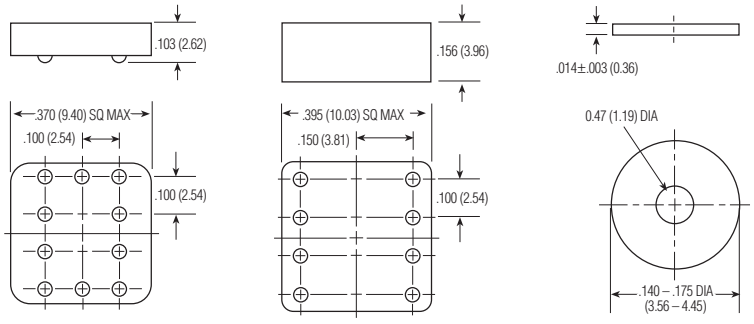

S **S2** **W**

Spreader & Mounting Pads

Coil Data

Nom. Coil Voltage (Vdc)	Coil Resistance in Ohms ±10% @ 25°C (Note 1)	Coil Circuit Current mA (Max.) (Note 1&2)	Coil Circuit Current mA (Min.) (Note 1&2)	Pickup Voltage Vdc (Max.) @ 25°C (Note 2)	Base Turn On Current mA (Max.) @ 25°C	Pickup Voltage Vdc (Max.) @ 125°C (Note 2)	Base Turn On Current mA (Max.) @ 125°C	Drop-Out Voltage Vdc (Min.) @ 25°C (Note 2)	Drop-Out Voltage Vdc (Min.) @ -65°C (Note 2)	Nom. Coil Power (mW) @ 25°C	Max. Coil Voltage	Coil Desig.
MST												
5.0	100	59.3	43.5	2.8	0.37	3.6	1.50	0.22	0.14	250	7.0	5
6.0	200	35.4	26.4	3.8	0.25	4.8	1.00	0.28	0.18	180	10.0	6
9.0	400	25.8	19.7	5.2	0.18	7.8	0.75	0.54	0.35	203	15.0	9
12.0	850	16.7	12.2	7.4	0.12	11.0	0.47	0.63	0.41	169	20.0	12
18.0	1,600	13.1	9.7	10.0	0.09	14.5	0.38	0.91	0.59	203	30.0	18
26.5	3,300	9.5	6.9	14.2	0.06	19.0	0.24	1.37	0.89	213	40.0	26
36.0	6,500	6.4	4.8	20.0	0.034	27.0	0.17	1.80	1.25	199	57.0	36
48.0	11,000	5.1	3.7	25.8	0.026	36.0	0.13	2.40	1.60	209	75.0	48

Notes: 1. Coil resistance not directly measurable. Coil current should be within limits shown when tested at nominal voltage at 25°C for 5 seconds max.
2. Set base current at 3 mA to 15 mA during measurements.

Ordering Instructions

Catalog-selected Relays: The catalog number is derived by choosing the proper CODE for each of the relay characteristics in the order in which the codes are listed.

Specifying a Part Number Example:	Type	Terminal	Diodes	Ground Pins	Coils	Spreader/Mounting Pads
	MS	C	T	G	-26	S

* The part number example shown on this page is for catalog items. For a list of specific QPL part numbers, please see the index in Section 15.

Catalog 5-1773450-5
Revised 3-13

www.te.com

Dimensions are shown for reference purposes only. Specifications subject to change.

Dimensions are in millimeters unless otherwise specified.

USA: +1 800 522 6752
Asia Pacific: +86 0 400 820 6015
UK: +44 800 267 666

For additional support numbers please visit www.te.com

Double Pole, Electrically Held, 1 Amp and Less (Continued)

MGAT

MGAT

Standard .100 Grid Diode Suppressed/MOSFET Driven High Performance Relay

Qualified to MIL-R-28776/6

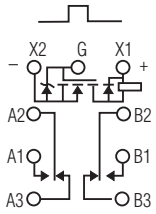

Terminal View

Product Facts

- **MOSFET driver, zener & suppression diodes**
- **Hermetically sealed**
- **High shock & vibration ratings**
- **Mounting pads**
- **Excellent RF switching**

Electrical Characteristics

Contact Arrangement — 2 Form C (DPDT)

Contact Material — Stationary — Gold/platinum/palladium/silver (gold plated) Moveable — Gold/platinum/palladium/silver (gold plated)

Contact Resistance — Before Life — 100 milliohms max. (measured @ 10 mA @ 6 Vdc) After Life — 200 milliohms max. (measured @ 1 A @ 28 Vdc)

Mechanical Life Expectancy — 1 million operations

Coil Voltage — 5 to 26.5 Vdc

Coil Power — 660 mW max. @ 25°C

Duty Cycle — Continuous

Pick-up Voltage — Approximately 50% of nominal coil voltage

Pick-up Sensitivity — 130 mW max. @ 25°C

Contact Ratings

Contact Load	Type	Operations Min.
1.0 A @ 28 Vdc	Resistive	100,000
250 mA @ 115 Vac, 60 Hz & 400 Hz	Resistive (case not grounded)	100,000
100 mA @ 115 Vac, 60 Hz & 400 Hz	Resistive	100,000
0.2 A @ 28 Vdc	Inductive (0.32 Henry)	100,000
0.1 A @ 28 Vdc	Lamp	100,000
30 µA @ 50 mVdc	Low Level	1,000,000
0.1 A @ 28 Vdc	Intermediate Current	50,000

MGAT

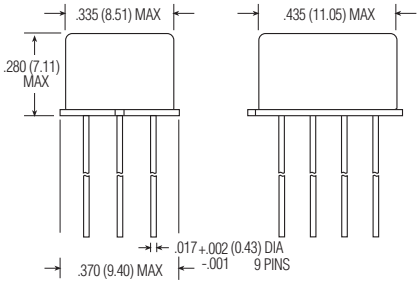

MGAT Enclosure

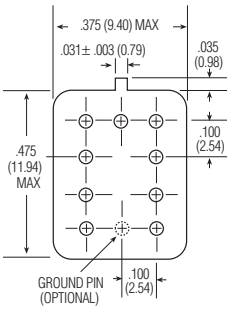

MGAT Header

Catalog 5-1773450-5
Revised 3-13

www.te.com

Dimensions are shown for reference purposes only. Specifications subject to change.

Dimensions are in millimeters unless otherwise specified.

USA: +1 800 522 6752
Asia Pacific: +86 0 400 820 6015
UK: +44 800 267 666

For additional support numbers please visit www.te.com

Double Pole, Electrically Held, 1 Amp and Less (Continued)

MGAT (Continued)

Operating Characteristics

Timing —
Operate Time — 2.0 ms max.
Contact Bounce — 1.5 ms max.

Dielectric Withstanding Voltage —
Between Open Contacts —
500 Vrms 60 Hz
Between Adjacent Contacts —
500 Vrms 60 Hz
Between Contacts & Coil —
500 Vrms 60 Hz

Insulation Resistance —
10,000 megohms min. @ 500 Vdc
1,000 megohms @ 500 Vdc
(coil to case @ +125°C)

Environmental Characteristics

Temperature Range —
-65°C to +125°C

Weight —
0.09 oz. (2.55 gms)
0.129 oz. (3.45 gms) w/ mounting pad attached

Vibration Resistance —
30 G's, 10 to 3,000 Hz

Shock Resistance —
75 G's, 6 ±1 ms max.

QPL Approval —
MIL-R-28776/6 (JMGAT)

Semiconductor Characteristics

Diode —
100 Vdc peak inverse voltage (PIV)
1.0 Vdc max. transient voltage

Zener Diode —
20 Vdc ±3 Vdc over temperature range

MOSFET —
0.5 Vdc min. gate turn-off voltage
4.3 Vdc max. gate turn-on voltage

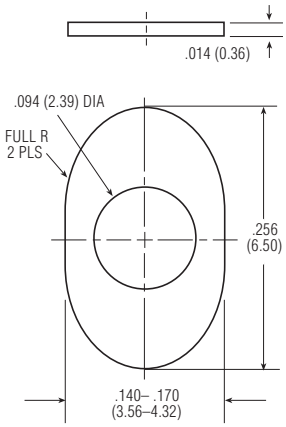

MGAT Mounting Pad

Coil Data

Nom. Coil Voltage (Vdc)	Coil Resistance in Ohms ±10% @ 25°C (Note)	Coil Circuit Current mA (Max.) (Note)	Coil Circuit Current mA (Min.) (Note)	Pickup Voltage Vdc (Max.) @ 25°C	Pickup Voltage Vdc (Max.) @ 125°C	Drop-Out Voltage Vdc (Min.) @ 25°C	Drop-Out Voltage Vdc (Min.) @ -65°C	Nom. Coil Power (mW) @ 25°C	Max. Coil Voltage	Coil Desig.
MGAT										
5.0	39	132.3	96.5	2.9	3.5	0.23	0.13	641	5.8	5
6.0	78	83.9	60.3	3.5	4.5	0.32	0.18	462	8.0	6
9.0	220	47.1	33.1	5.3	6.8	0.48	0.27	368	12.0	9
12.0	390	36.1	24.9	7.1	9.0	0.65	0.36	369	16.0	12
18.0	880	24.1	16.1	10.6	13.5	0.97	0.54	368	24.0	18
26.5	1,560	19.9	12.9	14.2	18.0	1.30	0.72	450	32.0	26

Note: Coil resistance not directly measurable. Coil current should be within limits shown when tested at nominal voltage at 25°C for 5 seconds max.

Ordering Instructions

Catalog-selected Relays: The catalog number is derived by choosing the proper CODE for each of the relay characteristics in the order in which the codes are listed.

Specifying a Part Number Example:

Type	Terminals	Diodes	Ground Pins	Coils	Mounting Pads
MGA	C	T	G	-26	W

* The part number example shown on this page is for catalog items. For a list of specific QPL part numbers, please see the index in Section 15.

Catalog 5-1773450-5
Revised 3-13

www.te.com

Dimensions are shown for reference purposes only. Specifications subject to change.

Dimensions are in millimeters unless otherwise specified.

USA: +1 800 522 6752
Asia Pacific: +86 0 400 820 6015
UK: +44 800 267 666

For additional support numbers please visit www.te.com

Double Pole, Electrically Held, 1 Amp and Less (Continued)

MGST

MGST

Sensitive .100 Grid Diode Suppressed/MOSFET Driven High Performance Relay

Qualified to MIL-R-28776/7

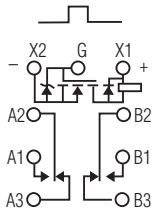

Terminal View

Product Facts

- **MOSFET driver, zener & suppression diodes**
- **Hermetically sealed**
- **High shock & vibration ratings**
- **Mounting pads**
- **Excellent RF switching**

Electrical Characteristics

Contact Arrangement — 2 Form C (DPDT)

Contact Material — Stationary — Gold/platinum/palladium/silver (gold plated) Moveable — Gold/platinum/palladium/silver (gold plated)

Contact Resistance — Before Life — 100 milliohms max. (measured @ 10 mA @ 6 Vdc) After Life — 200 milliohms max. (measured @ 1 A @ 28 Vdc)

Mechanical Life Expectancy — 1 million operations

Coil Voltage — 5 to 26.5 Vdc

Coil Power — 565 mW max. @ 25°C

Duty Cycle — Continuous

Pick-up Voltage — Approximately 50% of nominal coil voltage

Pick-up Sensitivity — 60 mW max. @ 25°C

Contact Ratings

Contact Load	Type	Operations Min.
1.0 A @ 28 Vdc	Resistive	100,000
250 mA @ 115 Vac, 60 Hz & 400 Hz	Resistive (case not grounded)	100,000
100 mA @ 115 Vac, 60 Hz & 400 Hz	Resistive	100,000
0.2 A @ 28 Vdc	Inductive (0.32 Henry)	100,000
0.1 A @ 28 Vdc	Lamp	100,000
30 µA @ 50 mVdc	Low Level	1,000,000
0.1 A @ 28 Vdc	Intermediate Current	50,000

MGST

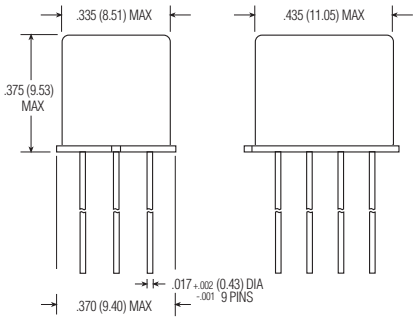

MGST Enclosure

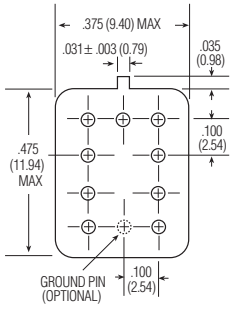

MGST Header

Catalog 5-1773450-5
Revised 3-13

www.te.com

Dimensions are shown for reference purposes only. Specifications subject to change.

Dimensions are in millimeters unless otherwise specified.

USA: +1 800 522 6752
Asia Pacific: +86 0 400 820 6015
UK: +44 800 267 666

For additional support numbers please visit www.te.com

Double Pole, Electrically Held, 1 Amp and Less (Continued)

MGST (Continued)

Operating Characteristics

Timing —
Operate Time — 4.0 ms max.
Release Time — 7.5 ms max.

Contact Bounce — 1.5 ms max.

Dielectric Withstanding Voltage —
Between Open Contacts —
500 Vrms 60 Hz
Between Adjacent Contacts —
500 Vrms 60 Hz
Between Contacts & Coil —
500 Vrms 60 Hz

Insulation Resistance —
10,000 megohms min. @ 500 Vdc
1,000 megohms @ 500 Vdc
(coil to case @ +125°C)

Environmental Characteristics

Temperature Range —
-65°C to +125°C

Weight —
0.09 oz. (2.55 gms)
0.129 oz. (3.45 gms) w/ mounting pad attached

Vibration Resistance —
30 G's, 10 to 3,000 Hz

Shock Resistance —
75 G's, 6 ±1 ms max.

QPL Approval —
MIL-R-28776/7 (JMGST)

Semiconductor Characteristics

Diode —
100 Vdc peak inverse voltage (PIV)
1.0 Vdc max. transient voltage

Zener Diode —
20 Vdc ±3 Vdc over temperature range

MOSFET —
0.5 Vdc min. gate turn off voltage
4.3 Vdc max. gate turn on voltage

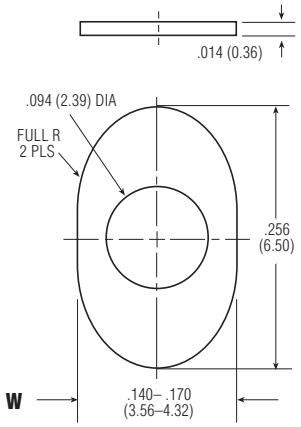

MGST Mounting Pad

Coil Data

Nom. Coil Voltage (Vdc)	Coil Resistance in Ohms ±10% @ 25°C (Note)	Coil Circuit Current mA (Max.) (Note)	Coil Circuit Current mA (Min.) (Note)	Pickup Voltage Vdc (Max.) @ 25°C	Pickup Voltage Vdc (Max.) @ 125°C	Drop-Out Voltage Vdc (Min.) @ 25°C	Drop-Out Voltage Vdc (Min.) @ -65°C	Nom. Coil Power (mW) @ 25°C	Max. Coil Voltage	Coil Desig.
MGST										
5.0	100	56.0	43.0	2.9	4.0	0.23	0.13	250	5.6	5
6.0	200	33.0	27.0	3.5	4.9	0.32	0.18	180	8.0	6
9.0	400	26.4	17.8	5.3	7.3	0.48	0.27	203	12.0	9
12.0	800	17.7	11.3	7.1	9.8	0.65	0.36	180	16.0	12
18.0	1,600	13.8	8.4	10.6	14.6	0.97	0.54	203	24.0	18
26.5	3,200	10.2	5.8	14.2	19.5	1.30	0.72	219	32.0	26

Note: Coil resistance not directly measurable. Coil current should be within limits shown when tested at nominal voltage at 25°C for 5 seconds max.

Ordering Instructions

Catalog-selected Relays: The catalog number is derived by choosing the proper CODE for each of the relay characteristics in the order in which the codes are listed.

Specifying a Part Number Example:

Type	Terminals	Diodes	Ground Pins	Coils	Mounting Pads
MGS	C	T	G	-26	W

* The part number example shown on this page is for catalog items. For a list of specific QPL part numbers, please see the index in Section 15.

Dimensions are shown for reference purposes only. Specifications subject to change.

Dimensions are in millimeters unless otherwise specified.

USA: +1 800 522 6752
Asia Pacific: +86 0 400 820 6015
UK: +44 800 267 666

For additional support numbers please visit www.te.com

Double Pole, Electrically Held, 1 Amp and Less (Continued)

SMGA, SMGAD, SMGADD

SMGA

Standard .100 Grid Surface Mount High Performance Relay

Designed to MIL-R-39016/17

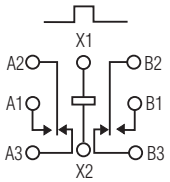

Terminal View

Product Facts

- Hermetically sealed
- High shock & vibration ratings
- Surface mount leads
- Excellent RF switching

SMGAD

Standard .100 Grid Diode Suppressed Surface Mount High Performance Relay

Designed to MIL-R-39016/18

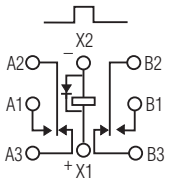

Terminal View

Product Facts

- Suppression diode
- Hermetically sealed
- High shock & vibration ratings
- Surface mount leads
- Excellent RF switching

SMGADD

Standard .100 Grid Diode Suppressed/Protected Surface Mount High Performance Relay

Designed to MIL-R-39016/19

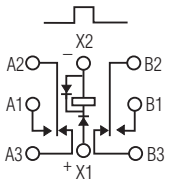

Terminal View

Product Facts

- Suppression & protection diodes
- Hermetically sealed
- High shock & vibration ratings
- Surface mount leads
- Excellent RF switching

Electrical Characteristics

Contact Arrangement — 2 Form C (DPDT)

Contact Material — Stationary — Gold/platinum/palladium/silver (gold plated) Moveable — Gold/platinum/palladium/silver (gold plated)

Contact Resistance — Before Life — 100 milliohms max. (measured @ 10 mA @ 6 Vdc) After Life — 200 milliohms max. (measured @ 1 A @ 28 Vdc)

Mechanical Life Expectancy — 1 million operations

Coil Voltage — 5 to 26.5 Vdc

Coil Power — 660 mW max. @ 25°C

Duty Cycle — Continuous

Pick-up Voltage — Approximately 50% of nominal coil voltage

Pick-up Sensitivity — 130 mW max. @ 25°C

Contact Ratings

Contact Load	Type	Operations Min.
1.0 A @ 28 Vdc	Resistive	100,000
250 mA @ 115 Vac, 60 Hz & 400 Hz	Resistive (case not grounded)	100,000
100 mA @ 115 Vac, 60 Hz & 400 Hz	Resistive	100,000
0.2 A @ 28 Vdc	Inductive (0.32 Henry)	100,000
0.1 A @ 28 Vdc	Lamp	100,000
30 µA @ 50 mVdc	Low Level	1,000,000
0.1 A @ 28 Vdc	Intermediate Current	50,000

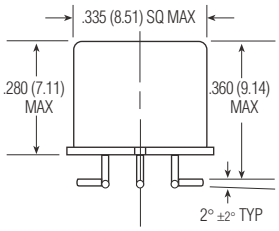

Enclosure

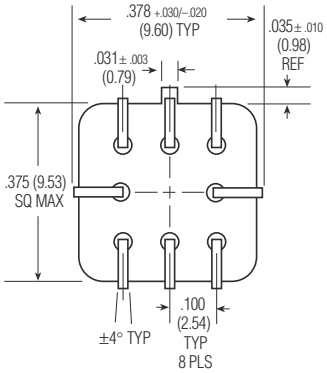

Header

Catalog 5-1773450-5
Revised 3-13

www.te.com

Dimensions are shown for reference purposes only. Specifications subject to change.

Dimensions are in millimeters unless otherwise specified.

USA: +1 800 522 6752
Asia Pacific: +86 0 400 820 6015
UK: +44 800 267 666

For additional support numbers please visit www.te.com

Double Pole, Electrically Held, 1 Amp and Less (Continued)

SMGA, SMGAD, SMGADD
(Continued)

Operating Characteristics

Timing —
Operate Time — 2.0 ms max.
Release Time —
SMGA — 1.5 ms max.
SMGAD/SMGADD — 4.0 ms max.
(suppression diode, protection/ suppression diodes)

Contact Bounce — 1.5 ms max.

Dielectric Withstanding Voltage —
Between Open Contacts —
500 Vrms 60 Hz
Between Adjacent Contacts —
500 Vrms 60 Hz
Between Contacts & Coil —
500 Vrms 60 Hz

Insulation Resistance —
10,000 megohms min. @ 500 Vdc
1,000 megohms @ 500 Vdc
(coil to case @ +125°C)

Environmental Characteristics

Temperature Range —
-65°C to +125°C

Weight —
0.09 oz. (2.55 gms)

Vibration Resistance —
30 G's, 10 to 3,000 Hz

Shock Resistance —
75 G's, 6 ±1 ms max.

Semiconductor Characteristics

Diode —
100 Vdc peak inverse voltage (PIV)
1.0 Vdc max. transient voltage

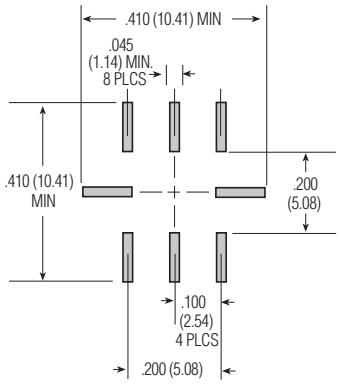

Recommended Solder Pad Layout

Coil Data

Nom. Coil Voltage (Vdc)	Coil Resistance in Ohms ±10% @ 25°C (Note)	Coil Circuit Current mA (Max.) (Note)	Coil Circuit Current mA (Min.) (Note)	Pickup Voltage Vdc (Max.) @ 25°C	Pickup Voltage Vdc (Max.) @ 125°C	Drop-Out Voltage Vdc (Min.) @ 25°C	Drop-Out Voltage Vdc (Min.) @ -65°C	Nom. Coil Power (mW) @ 25°C	Max. Coil Voltage	Coil Desig.
SMGA/SMGAD										
5.0	50	n/a	n/a	2.7	3.5	0.22	0.14	500	5.8	5
6.0	98	n/a	n/a	3.5	4.5	0.28	0.18	367	8.0	6
9.0	220	n/a	n/a	5.3	6.8	0.54	0.35	368	12.0	9
12.0	390	n/a	n/a	7.0	9.0	0.63	0.41	369	16.0	12
18.0	880	n/a	n/a	10.5	13.5	0.91	0.59	368	24.0	18
26.5	1,560	n/a	n/a	14.2	18.0	1.37	0.89	450	32.0	26
SMGADD										
5.0	39	128.2	93.2	3.2	4.0	0.6	0.6	641	5.8	5
6.0	78	78.3	58.3	4.0	5.0	0.7	0.7	462	8.0	6
9.0	220	42.9	33.0	6.3	7.8	0.9	0.8	368	12.0	9
12.0	390	32.8	25.6	8.0	10.0	1.1	0.9	369	16.0	12
18.0	880	22.1	17.5	11.5	14.5	1.4	1.1	368	24.0	18
26.5	1,560	18.5	14.8	15.2	19.0	1.8	1.4	450	32.0	26

Note: Coil resistance not directly measurable. Coil current should be within limits shown when tested at nominal voltage at 25°C for 5 seconds max.

Ordering Instructions

Catalog-selected Relays: The catalog number is derived by choosing the proper CODE for each of the relay characteristics in the order in which the codes are listed.

Specifying a Part Number Example:	Type	Diode	Coils
	SMGA	D	-26

Dimensions are shown for reference purposes only. Specifications subject to change.

Dimensions are in millimeters unless otherwise specified.

USA: +1 800 522 6752
Asia Pacific: +86 0 400 820 6015
UK: +44 800 267 666

For additional support numbers please visit www.te.com

Double Pole, Electrically Held, 1 Amp and Less (Continued)

SMGS, SMGSD, SMGSDD

SMGS

Sensitive .100 Grid Surface Mount High Performance Relay

Designed to MIL-R-39016/41

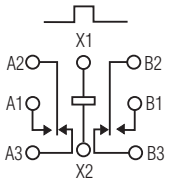

Terminal View

Product Facts

- Hermetically sealed
- High shock & vibration ratings
- Surface mount leads
- Excellent RF switching

SMGSD

Sensitive .100 Grid Diode Suppressed Surface Mount High Performance Relay

Designed to MIL-R-39016/42

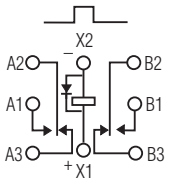

Terminal View

Product Facts

- Suppression diode
- Hermetically sealed
- High shock & vibration ratings
- Surface mount leads
- Excellent RF switching

SMGSDD

Sensitive .100 Grid Diode Suppressed/Protected Surface Mount High Performance Relay

Designed to MIL-R-39016/43

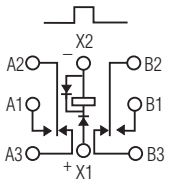

Terminal View

Product Facts

- Suppression & protection diodes
- Hermetically sealed
- High shock & vibration ratings
- Surface mount leads
- Excellent RF switching

Electrical Characteristics

Contact Arrangement — 2 Form C (DPDT)

Contact Material — Stationary — Gold/platinum/palladium/silver (gold plated) Moveable — Gold/platinum/palladium/silver (gold plated)

Contact Resistance — Before Life — 100 milliohms max. (measured @ 10 mA @ 6 Vdc) After Life — 200 milliohms max. (measured @ 1 A @ 28 Vdc)

Mechanical Life Expectancy — 1 million operations

Coil Voltage — 5 to 48 Vdc

Coil Power — 565 mW max. @ 25°C

Duty Cycle — Continuous

Pick-up Voltage — Approximately 50% of nominal coil voltage

Pick-up Sensitivity — 130 mW max. @ 25°C

Contact Ratings

Contact Load	Type	Operations Min.
1.0 A @ 28 Vdc	Resistive	100,000
250 mA @ 115 Vac, 60 Hz & 400 Hz	Resistive (case not grounded)	100,000
100 mA @ 115 Vac, 60 Hz & 400 Hz	Resistive	100,000
0.2 A @ 28 Vdc	Inductive (0.32 Henry)	100,000
0.1 A @ 28 Vdc	Lamp	100,000
30 µA @ 50 mVdc	Low Level	1,000,000
0.1 A @ 28 Vdc	Intermediate Current	50,000

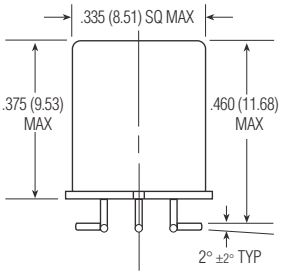

Enclosure

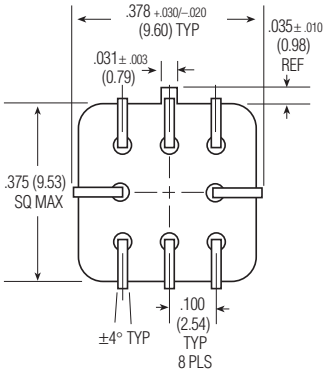

Header

Catalog 5-1773450-5
Revised 3-13

www.te.com

Dimensions are shown for reference purposes only. Specifications subject to change.

Dimensions are in millimeters unless otherwise specified.

USA: +1 800 522 6752
Asia Pacific: +86 0 400 820 6015
UK: +44 800 267 666

For additional support numbers please visit www.te.com

Double Pole, Electrically Held, 1 Amp and Less (Continued)

SMGS, SMGSD, SMGSDD
(Continued)

Operating Characteristics

Timing —
Operate Time — 4.0 ms max.
Release Time —
SMGS — 2.0 ms max.
SMGSD/SMGSDD — 7.5 ms max.
(suppression diode, protection/ suppression diodes)

Contact Bounce — 1.5 ms max.

Dielectric Withstanding Voltage —
Between Open Contacts —
500 Vrms 60 Hz
Between Adjacent Contacts —
500 Vrms 60 Hz
Between Contacts & Coil —
500 Vrms 60 Hz

Insulation Resistance —
10,000 megohms min. @ 500 Vdc
1,000 megohms @ 500 Vdc
(coil to case @ +125°C)

Environmental Characteristics

Temperature Range —
-65°C to +125°C

Weight —
0.09 oz. (2.55 gms)

Vibration Resistance —
30 G's, 10 to 3,000 Hz

Shock Resistance —
75 G's, 6 ±1 ms max.

Semiconductor Characteristics

Diode —
100 Vdc peak inverse voltage (PIV)
1.0 Vdc max. transient voltage

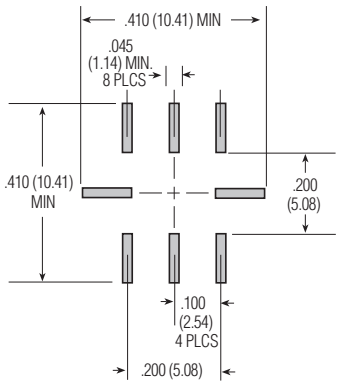

Recommended Solder Pad Layout

Coil Data

Nom. Coil Voltage (Vdc)	Coil Resistance in Ohms ±10% @ 25°C (Note)	Coil Circuit Current mA (Max.) (Note)	Coil Circuit Current mA (Min.) (Note)	Pickup Voltage Vdc (Max.) @ 25°C	Pickup Voltage Vdc (Max.) @ 125°C	Drop-Out Voltage Vdc (Min.) @ 25°C	Drop-Out Voltage Vdc (Min.) @ -65°C	Nom. Coil Power (mW) @ 25°C	Max. Coil Voltage	Coil Desig.
SMGS/SMGSD										
5.0	100	n/a	n/a	2.6	3.5	0.23	0.12	250	7.5	5
6.0	200	n/a	n/a	3.4	4.5	0.28	0.18	180	10.0	6
9.0	400	n/a	n/a	4.85	6.8	0.55	0.35	203	15.0	9
12.0	800	n/a	n/a	7.0	9.0	0.64	0.41	180	20.0	12
18.0	1,600	n/a	n/a	9.8	13.5	0.92	0.59	203	30.0	18
26.5	3,200	n/a	n/a	14.0	18.0	1.4	0.89	219	40.0	26
36.0	6,500	n/a	n/a	20.0	27.0	1.8	1.25	199	57.0	36
48.0	11,000	n/a	n/a	25.8	36.0	2.4	1.60	209	75.0	48
SMGSDD										
5.0	64	78.1	56.8	2.9	3.7	0.8	0.7	391	7.5	5
6.0	125	48.9	36.3	4.0	4.8	0.9	0.8	288	10.0	6
9.0	400	23.6	18.1	6.1	8.0	1.1	0.9	203	15.0	9
12.0	800	16.0	12.5	7.8	11.0	1.3	1.0	180	20.0	12
18.0	1,600	12.2	9.6	11.3	14.5	1.5	1.1	203	30.0	18
26.5	3,200	9.0	7.2	15.2	19.0	1.7	1.3	219	40.0	26
36.0	6,500	6.1	4.9	21.7	27.2	2.3	1.7	199	57.0	36
48.0	11,000	4.8	3.9	27.8	34.8	2.8	2.0	209	75.0	48

Note: Coil resistance not directly measurable. Coil current should be within limits shown when tested at nominal voltage at 25°C for 5 seconds max.

Ordering Instructions

Catalog-selected Relays: The catalog number is derived by choosing the proper CODE for each of the relay characteristics in the order in which the codes are listed.

Specifying a Part Number Example:	Type	Diode	Coils
	SMGS	D	-26

Catalog 5-1773450-5
Revised 3-13

www.te.com

Dimensions are shown for reference purposes only. Specifications subject to change.

Dimensions are in millimeters unless otherwise specified.

USA: +1 800 522 6752
Asia Pacific: +86 0 400 820 6015
UK: +44 800 267 666

For additional support numbers please visit www.te.com

Double Pole, Electrically Held, 1 Amp and Less (Continued)

SHC, SHCD, SHCS, SHCSD

SHC, SHCS

Standard / Sensitive
.100 Grid Surface Mount
Commercial Relay

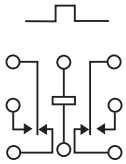

Terminal View

Product Facts

- Hermetically sealed
- Excellent RF switching

SHCD, SHCSD

Standard / Sensitive
.100 Grid Surface Mount
Diode Suppressed
Commercial Relay

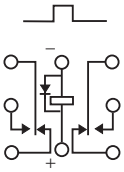

Terminal View

Product Facts

- Suppression Diode
- Hermetically sealed
- Excellent RF switching

Electrical Characteristics

Contact Arrangement —
2 Form C (DPDT)

Contact Material —
Stationary —
Gold/platinum/palladium/silver alloy
(gold plated)
Moveable —
Gold/platinum/palladium/silver alloy
(gold plated)

Contact Resistance —
Before Life — 100 milliohms max.
(measured @ 10 mA @ 6 Vdc)
After Life — 200 milliohms max.
(measured @ 1 A @ 28 Vdc)

Mechanical Life Expectancy —
1 million operations

Coil Voltage —
5 to 26.5 Vdc (SHC/SHCD)
5 to 48 Vdc (SHCS/SHCSD)

Coil Power —
SHC/SHCD — 660 mW max. @ 25°C
SHCS/SHCSD — 565 mW max. @ 25°C

Duty Cycle — Continuous

Pick-up Voltage — Approximately
70% of nominal coil voltage

Pick-up Sensitivity —
SHC/SHCD — 180 mW max. @ 25°C
SHCS/SHCSD — 90 mW max. @ 25°C

Contact Ratings

Contact Load	Type	Operations Min.
1.0 A @ 28 Vdc	Resistive	100,000
250 mA @ 115 Vac, 60 Hz & 400 Hz	Resistive (Case not grounded)	100,000
100 mA @ 115 Vac, 60 Hz & 400 Hz	Resistive	100,000
0.2 A @ 28 Vdc	Inductive (0.32 Henry)	100,000
0.1 A @ 28 Vdc	Lamp	100,000
30 µA @ 50 mVdc	Low Level	1,000,000

Catalog 5-1773450-5
Revised 3-13

www.te.com

Dimensions are shown for reference purposes only. Specifications subject to change.

Dimensions are in millimeters unless otherwise specified.

USA: +1 800 522 6752
Asia Pacific: +86 0 400 820 6015
UK: +44 800 267 666

For additional support numbers please visit www.te.com

Double Pole, Electrically Held, 1 Amp and Less (Continued)

SHC, SHCD, SHCS, SHCSD
(Continued)

Operating Characteristics

Timing —
Operate Time —
SHC/SHCD — 4.0 ms max.
SHCS/SHCSD — 6.0 ms max.
Release Time —
SHC — 3.0 ms max.
SHCS — 3.0 ms max.
SHCD — 6.0 ms max.
(suppression diode)
SHCSD — 7.5 ms max.
(suppression diode)

Dielectric Withstanding Voltage —
Between Open Contacts —
350 Vrms 60 Hz
Between Adjacent Contacts —
350 Vrms 60 Hz
Between Contacts & Coil —
350 Vrms 60 Hz

Insulation Resistance —
1,000 megohms @ 500 Vdc

Environmental Characteristics

Temperature Range —
-55°C to +85°C

Weight —
SHC/SHCD —
0.09 oz. (2.55 gms)
SHCS/SHCSD —
0.15 oz. (4.30 gms)

Vibration Resistance —
10 G's, 10 to 500 Hz

Shock Resistance —
30 G's, 6 ±1 ms

Semiconductor Characteristics

Diode —
100 Vdc peak inverse voltage (PIV)
1.0 Vdc max. transient voltage

Standard Coil Data

	Nom. Coil Voltage (Vdc)	Coil Resistance in Ohms ±20% @ 25°C	Pickup Voltage Vdc (Max.) @ 25°C	Nom. Coil Power (mW) @ 25°C	Max. Coil Voltage	Coil Desig.
SHC/SHCD	5.0	64	3.8	391	5.8	5
	6.0	98	4.9	367	8.0	6
	9.0	220	7.0	368	12.0	9
	12.0	400	9.0	360	16.0	12
	18.0	880	14.0	368	24.0	18
	26.5	1,600	18.0	439	32.0	26
SHCS/SHCSD	5.0	100	3.5	250	7.5	5
	6.0	200	4.5	180	10.0	6
	9.0	400	6.8	203	15.0	9
	12.0	800	9.0	180	20.0	12
	18.0	1,600	13.5	203	30.0	18
	26.5	3,200	18.0	219	40.0	26
	36.0	6,500	24.0	199	57.0	36
	48.0	11,000	32.0	209	75.0	48

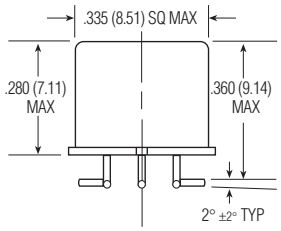

SHC/SHCD Enclosure

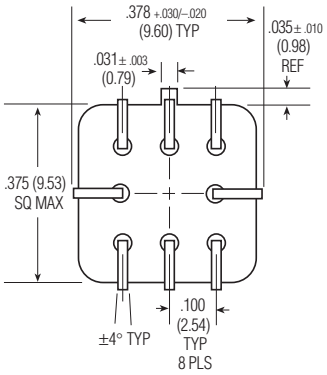

SHC/SHCD/SHCS/SHCSD Header

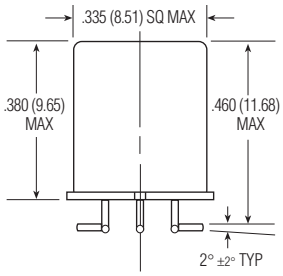

SHCS/SHCSD Enclosure

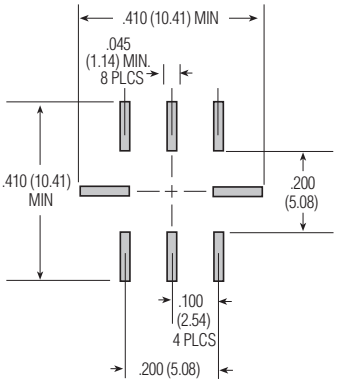

Recommended Solder Pad Layout

Ordering Instructions

Catalog-selected Relays: The catalog number is derived by choosing the proper CODE for each of the relay characteristics in the order in which the codes are listed.

Specifying a Part Number Example:	Type	Diodes	Coils
	SHC	D	-26

Dimensions are shown for reference purposes only. Specifications subject to change.

Dimensions are in millimeters unless otherwise specified.

USA: +1 800 522 6752
Asia Pacific: +86 0 400 820 6015
UK: +44 800 267 666

For additional support numbers please visit www.te.com

Double Pole, Electrically Held, 2 Amps and Less

HFW, HMB, HMS

HFW

Standard Half Size High Performance Relay

Qualified to MIL-R-39016/6

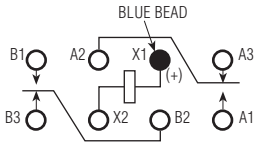

Terminal View

Product Facts

- Hermetically sealed
- Up to 2 amps switching
- High shock & vibration ratings
- Optional terminals & mounting styles
- Excellent RF switching

HMB

Bifilar Half Size High Performance Relay

Qualified to MIL-R-39016/22

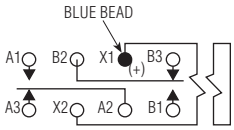

Terminal View

Product Facts

- Hermetically sealed
- Up to 2 amps switching
- High shock & vibration ratings
- Optional terminals & mounting styles
- Excellent RF switching

HMS

Sensitive Half Size High Performance Relay

Qualified to MIL-R-39016/44

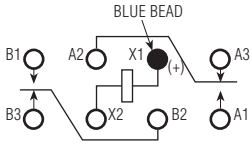

Terminal View

Product Facts

- Hermetically sealed
- Up to 2 amps switching
- High shock & vibration ratings
- Optional terminals & mounting styles
- Excellent RF switching

Electrical Characteristics

Contact Arrangement — 2 Form C (DPDT)

Contact Material —
Stationary —
Hardened silver alloy
Moveable —
Gold plated hardened silver alloy

Contact Resistance —
Before Life — 50 milliohms max. (measured at 10 mA @ 6 Vdc)
After Life — 100 milliohms max. (measured @ 2 A @ 28 Vdc)

Mechanical Life Expectancy — 50 million operations

Coil Voltage —
5 to 48 Vdc (HFW)
6 to 26.5 Vdc (HMB)
5 to 36 Vdc (HMS)

Coil Power — 1.4 watts max. @ 25°C

Duty Cycle — Continuous

Pick-up Voltage — Approximately 50% of nominal coil voltage

Pick-up Sensitivity @ 25°C —
145 to 260 mW (HFW)
325 mW (HMB)
100 to 125 mW (HMS)

Contact Ratings

Contact Load	Type	Operations Min.
2 A @ 28 Vdc	Resistive	100,000
0.75 A @ 28 Vdc	Inductive (200mH)	100,000
0.1 A @ 115 Vac, 60 Hz & 400 Hz	Resistive	100,000
0.3 A @ 115 Vac, 60 Hz & 400 Hz	Resistive	100,000
0.1 A @ 28 Vdc	Intermediate	50,000
0.160 A @ 28 Vdc	Lamp	100,000
30 µA @ 50 mVdc	Low Level	1,000,000

RF Performance

Frequency (MHz)	RF Losses (dB)	VSWR	Isolation (dB)
100	0.1	1.17:1	40
500	0.3	1.19:1	28
1000	0.4	1.19:1	23

Catalog 5-1773450-5
Revised 3-13

www.te.com

Dimensions are shown for reference purposes only. Specifications subject to change.

Dimensions are in millimeters unless otherwise specified.

USA: +1 800 522 6752
Asia Pacific: +86 0 400 820 6015
UK: +44 800 267 666

For additional support numbers please visit www.te.com

Double Pole, Electrically Held, 2 Amps and Less (Continued)

HFW, HMB, HMS (Continued)

Operating Characteristics

Timing —
Operate Time —
4.0 ms max. (HFW)
5.0 ms max. (HMB)
6.0 ms max. (HMS)
Release Time —
4.0 ms max. (HFW)
5.0 ms max. (HMB/HMS)

Contact Bounce — 2.0 ms max.

Dielectric Withstanding Voltage —
Between Open Contacts —
500 Vrms 60 Hz
Between Adjacent Contacts —
1000 Vrms 60 Hz
Between Contacts & Coil —
1000 Vrms 60 Hz

Insulation Resistance —
10,000 megohms min. @ 500 Vdc

Environmental Characteristics

Temperature Range —
-65°C to +125°C

Weight — 0.46 oz. (13 gms max.)

Vibration Resistance —
HFW/HMB/HMS —
Standard — 20 G's, 10 to 2,000 Hz
HFW/HMB —
QPL — 30 G's, 10 to 3,000 Hz
HMS —
QPL — 20 G's, 10 to 2,500 Hz

Shock Resistance —
100 G's, 6 ±1 ms
50 G's, 11 ±1 ms (HMS)

QPL Approval —
MIL-R-39016/6 (HFW)
MIL-R-39016/22 (HMB)
MIL-R-39016/44 (HMS)

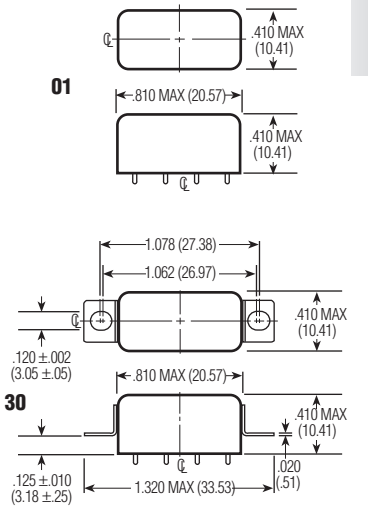

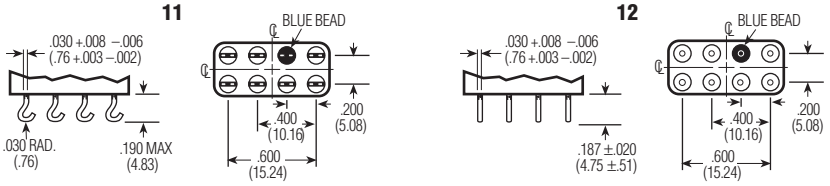

Terminals

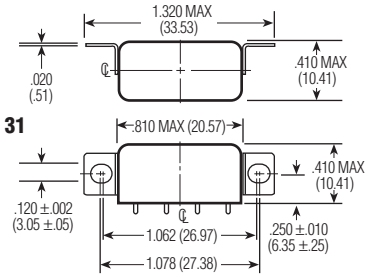

Mounting Styles

Standard Coil Data

	Nom. Coil Voltage (Vdc)	Coil Resistance in Ohms ±10% @ 25°C	Pickup Voltage Vdc (Max.) @ 25°C	Pickup Voltage Vdc (Min.) @ 125°C	Drop-out Voltage Vdc (Min.) @ 25°C	Drop-out Voltage Vdc (Min.) @ -65°C	Nom. Coil Power (mW) @ 25°C	Max. Coil Voltage	Coil Desig.
HFW	5.0	27	2.7	3.8	0.29	0.21	926	6.0	L
	6.0	40	3.2	4.5	0.35	0.25	900	7.5	F
	12.0	160	6.4	9.0	0.7	0.5	900	15.0	G
	26.5	700	13.5	18.0	1.5	1.0	1003	32.0	K
HMB	6.0	40	3.6	4.8	0.35	0.25	900	7.5	F
	12.0	160	7.2	9.6	0.7	0.5	900	15.0	G
	26.5	700	15.0	20.0	1.5	1.0	1003	32.0	K
HMS	5.0	47	2.2	3.2	0.21	0.12	532	7.0	S001
	6.0	75	2.75	4.0	0.27	0.17	480	9.0	S002
	12.0	310	5.6	8.0	0.55	0.35	465	20.0	S003
	26.5	1,030	11.4	16.5	1.1	0.7	682	35.0	S004
	30.0	1,620	14.3	21.0	1.4	0.9	556	44.0	S005
	36.0	2,640	18.0	26.0	1.8	1.1	491	56.0	S006
Other	6-8	60	3.5	4.85	0.35	0.22	817	9.0	A
(avail. for HFW	12-15	320	6.8	9.42	0.68	0.44	570	21.0	B
relays only)	18.0	520	9.5	13.16	0.95	0.62	623	27.0	J
	26.5-32	1,250	14.0	19.4	1.5	0.98	684	42.0	D
	40.0	2,700	21.3	29.5	2.1	1.37	593	61.0	H
	48.0	3,500	25.5	35.3	2.5	1.63	658	70.0	E

Specifying a Part Number Example:

Type	Terminals	Mountings	Coils	Features
HFW	12	30	K	00 (n/a HMS)

* The part number example shown on this page is for catalog items. For a list of specific QPL part numbers, please see the index in Section 15.

Catalog 5-1773450-5
Revised 3-13

www.te.com

Dimensions are shown for reference purposes only. Specifications subject to change.

Dimensions are in millimeters unless otherwise specified.

USA: +1 800 522 6752
Asia Pacific: +86 0 400 820 6015
UK: +44 800 267 666

For additional support numbers please visit www.te.com

Double Pole, Electrically Held, 2 Amps and Less (Continued)

Long-life Half size Industrial Relay

Type 3SCV (2PDT)

Product Facts

- **100,000,000 operations at low-level**
- **Hermetic seal**

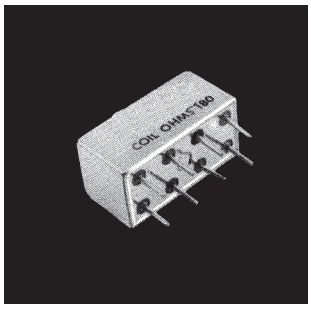

The 3SCV is an exceptionally long life relay for low level applications which is designed for industrial applications such as business machines and computer peripheral equipment. The design is such that the phenomenon of sticking contacts is all but eliminated. Because of its low contact resistance and its ability to handle overloads the 3SCV relay is well suited for applications which have previously required reed devices.

Electrical Characteristics

Contacts — 2 Form C

Contact Resistance — 0.050 ohms; 0.100 ohms after life test

Life — 10^5-2A 28 volts DC, 115 volts AC (not grounded, resistive)
0.5A
Low-level — 100,000,000 operations — 50 µA at 50 mV Peak AC or DC

Sensitivity — 340 mW

Operating Characteristics

Operate Time — 6 ms max.

Release Time — 4 ms max.

Contact Bounce — 2 ms max.

Enclosure — All welded, hermetically sealed

Terminals — Weldable and solderable

Dielectric Strength — 500 volts rms at sea level

Insulation Resistance — 1,000 megohm min.

Environmental Characteristics

Weight — 0.30 oz.

Vibration — 10G, 10-2000 Hz

Shock — 50 G 6ms, 1/2 sine

Temperature — -14°C to +125°C

See page 1-39 for Mounting Forms, Terminals and Circuit Diagrams.

Coil Table (All Values DC)* 340 mW Sensitivity: (Code 1)

Coil Code Letter	Coil Resistance at 25C (ohms)	Voltage Calibrated, CODE: 5			
		Suggested Source Volts†	Maximum Operate Volts at 25C	Release Voltage Range at 25C	
				Max	Min
A	47 ± 10%	4.8-7	3.9	2.7	.43
B	75 ± 10%	6.1-9	4.9	3.4	.5
C	120 ± 10%	7.7-12	6.3	4.4	.69
D	180 ± 10%	9.5-15	7.7	5.4	.85
E	310 ± 10%	12.5-20	10.1	7.0	1.1
F	440 ± 10%	15.0-23	12.0	8.4	1.3
H	700 ± 10%	20.0-30	15.5	10.9	1.7
K	1030 ± 10%	24.0-35	18.5	12.9	2.0
L	1620 ± 10%	30.0-44	23.1	16.2	2.5
M	2640 ± 10%	39.0-56	29.5	20.68	3.2

Ordering Instructions

Catalog-selected Relays: The catalog number is derived by choosing the proper CODE for each of the six relay characteristics in the order in which the codes are listed.

Example: The relay selected in this example is a 2PDT half size relay, voltage calibrated, two-hole side bracket mounting, solder hook header, 700 ohms coil resistance, and 340 mW sensitivity. By choosing the proper code for each of these relay characteristics, the catalog number is identified as 3SCV5042H1. The letter R following sensitivity code indicates relay received 5000 operation miss-test. Ex. 3SCV5042H1R.

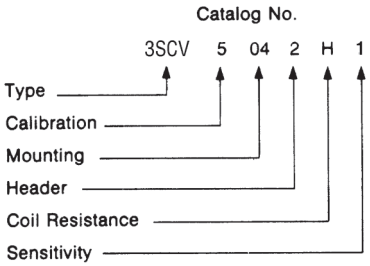

Catalog 5-1773450-5
Revised 3-13

www.te.com

Dimensions are shown for reference purposes only. Specifications subject to change.

Dimensions are in millimeters unless otherwise specified.

USA: +1 800 522 6752
Asia Pacific: +86 0 400 820 6015
UK: +44 800 267 666

For additional support numbers please visit www.te.com

Double Pole, Electrically Held, 2 Amps and Less (Continued)

Mounting Forms (3SCV)

All dimensions in inches

TOLERANCES	
(Unless otherwise specified)	
Hundredths	±0.020
Thousandths	±0.005

No Mount

Mounting Code
00

* Assumes relay held securely by potting or other means.

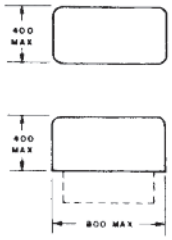

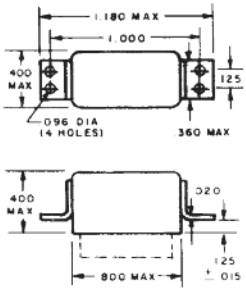

Four-hole End Bracket

Mounting Code
01

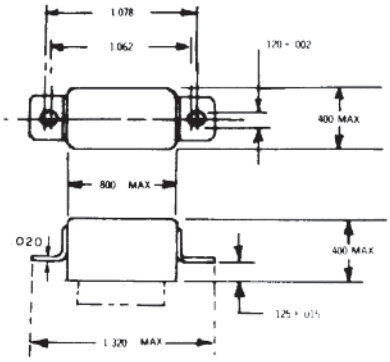

Two-hole elliptical END bracket

Mounting Code
53

Two-hole elliptical Side Bracket

Mounting Code
54

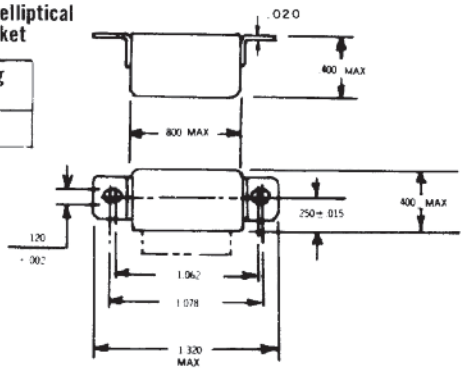

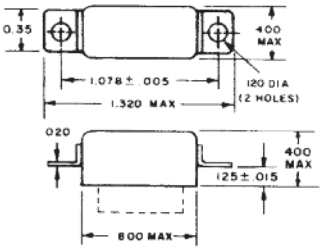

Two-hole End Bracket

Mounting Code
13

Two-hole Side Bracket

Mounting Code
04

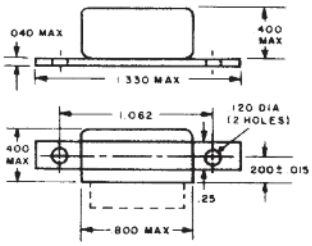

Header and Connection Diagrams

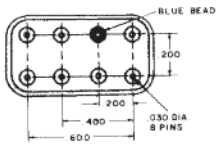

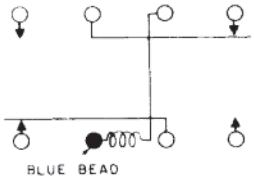

Header Types

Type	Z Dim.	Header Code
Solder hook	0.16	2
Straight pin (socket or PCB type)	0.19	4

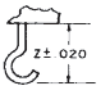

CODE: 2

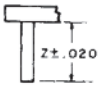

CODES: 4

Catalog 5-1773450-5
Revised 3-13

www.te.com

Dimensions are shown for reference purposes only. Specifications subject to change.

Dimensions are in millimeters unless otherwise specified.

USA: +1 800 522 6752
Asia Pacific: +86 0 400 820 6015
UK: +44 800 267 666

For additional support numbers please visit www.te.com

Double Pole, Electrically Held, 2 Amps and Less (Continued)

HFC

Commercial/Industrial Half Size Relay

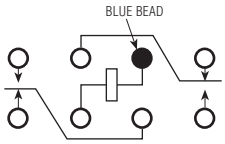

Terminal View

Product Facts

- **Hermetically sealed**
- **Up to 2 amps switching**
- **Economical configuration**
- **Optional terminals & mounting styles**

Electrical Characteristics

Contact Arrangement — 2 Form C (DPDT)

Contact Material —
Stationary —
Bifurcated hardened silver alloy
Moveable —
Gold plated hardened alloy

Contact Resistance —
Before Life — 50 milliohms max. (measured at 10 mA @ 6 Vdc)
After Life — 100 milliohms max. (measured @ 2 A @ 28 Vdc)

Mechanical Life Expectancy — 10 million operations

Coil Voltage — 5 to 26.5 Vdc

Coil Power — 1.4 watts max. @ 25°C

Duty Cycle — Continuous

Pick-up Voltage — Approximately 60% of nominal coil voltage

Pick-up Sensitivity — 360 mW

Operating Characteristics

Timing —
Operate Time — 6.0 ms max.
Release Time — 6.0 ms max.

Dielectric Withstanding Voltage —
Between Open Contacts — 350 Vrms 60 Hz
Between Adjacent Contacts — 500 Vrms 60 Hz
Between Contacts and Coil — 500 Vrms 60 Hz

Insulation Resistance — 1,000 megohms min @ 500 Vdc

Environmental Characteristics

Temperature Range — -55°C to +85°C

Weight — 0.46 oz. (13 gms) max.

Vibration Resistance — 10 G's, 10 to 500 Hz

Shock Resistance — 30 G's, 6 ±1 ms

Contact Ratings

Contact Load	Type	Operations Min.
2 A @ 28 Vdc	Resistive	100,000
0.75 A @ 28 Vdc	Inductive (200 mH)	100,000
0.3 A @ 115 Vac, 60 Hz & 400 Hz	Resistive	100,000

Standard Coil Data

Nom. Coil Voltage (Vdc)	Coil Resistance in Ohms ± 20% @ 25°C	Pickup Voltage Vdc (Max.) @ 25°C	Pickup Voltage Vdc (Max.) @ 85°C	Nom. Coil Power (W) @ 25°C	Max. Coil Voltage	Coil Desig.
5.0	27	3.0	3.7	.92	6.0	L
6.0	40	3.6	4.5	.90	7.5	F
12.0	160	7.2	8.9	.90	15.0	G
26.5	700	16.0	19.7	1.00	32.0	K

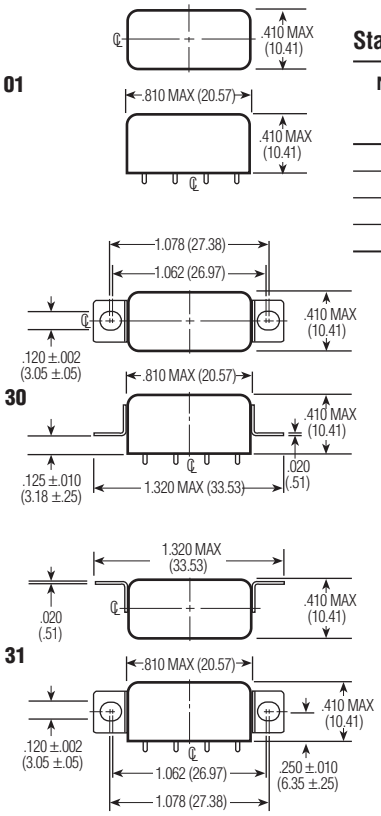

Mounting Styles

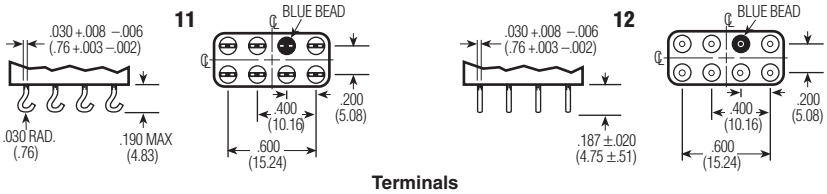

Terminals

Ordering Instructions

Catalog-selected Relays: The catalog number is derived by choosing the proper CODE for each of the six relay characteristics in the order in which the codes are listed.

Specifying a Part Number Example:

Type	Terminals	Mountings	Coils	Features
HFC	12	30	K	00

Catalog 5-1773450-5
Revised 3-13

www.te.com

Dimensions are shown for reference purposes only. Specifications subject to change.

Dimensions are in millimeters unless otherwise specified.

USA: +1 800 522 6752
Asia Pacific: +86 0 400 820 6015
UK: +44 800 267 666

For additional support numbers please visit www.te.com

Double Pole, Electrically Held, 2 Amps and Less (Continued)

.150 Grid-space Relays

Type 3SBC (2PDT) Standard

135 mW 2PDT
50 mW (Form AB)
1 PNC–1 PNO

Product Facts

- **Low profile… only 0.32 inches high**
- **Internal diode for coil transient suppression and transistor driven models available**
- **Qualified to MIL-R-39016/13**
- **RF designs available**

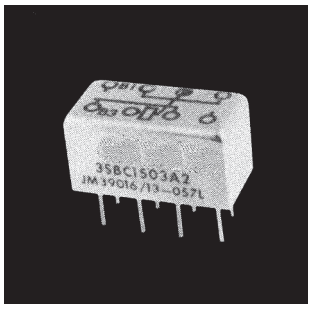

The .150 Grid-space relay — only 0.32 inches high — saves space in electronic packaging. The pin spacing allows you to insert the relay with no intermediate pin spreaders as well as meet applicable military specifications.

Electrical Characteristics

Contact Ratings —
DC resistive — 2 amps at 28 volts (50,000 operations)
1 Amp @ 28 V (100,000 operations)
DC inductive — 0.5 amps at 28 volts, 200 mH
AC resistive — 0.5 amps at 115 volts
AC — 0.125 amps at 115 volts (case grounded)
Low-level — 50 µA at 50 mV Peak AC or DC

Contact Resistance —
0.050 ohms max.; 0.150 ohms after life test

Life — 100,000 operations at rated loads listed; 1,000,000 operations at low-level loads

Operating Characteristics

Operate Time — 4 ms max.

Release Time — 4 ms max.

Contact Bounce — 1.5 ms

Dielectric Strength —
500 volts rms at sea level;
350 volts rms at 70,000 feet and above

Insulation Resistance — 1,000 megohm min. over temperature range

Environmental Characteristics

Vibration — 30G, to 3000 Hz

Shock — 100 G at 11 ms

Temperature — -65°C to +125°C

See page 1-44 for Mounting Forms, Terminals and Circuit Diagrams.

Coil Table Type 3SBC (All Values DC)*2PDT, 135 mW Sensitivity: (Code 1)

Coil Code Letter	Coil Resistance @ 25C (ohms)	Voltage Calibrated, Code 5					Current Calibrated, Code 6		
		Suggested Source Volts†	Max. Operate Volts @ 25C	Release Voltage Range @ 25C		Max. Continuous Current @ 125C (mA)	Max. Operate Current @ 25C (mA)	Release Current Range @ 25C (mA)	
				Max.	Min.			Max.	Min.
A	44 ± 10%	3.5-6.2	2.4	1.45	0.26	87.0	54.5	32.7	6.00
B	56 ± 10%	4.0-7.0	2.7	1.6	0.3	77.0	48.3	28.6	5.30
D	140 ± 10%	6.4-12.0	4.4	2.6	0.5	50.3	31.4	18.5	3.60
E	210 ± 10%	8.0-16.0	5.4	3.2	0.6	40.0	25.7	15.4	2.80
L	650 ± 10%	13.6-24.0	9.5	5.6	1.0	22.9	14.3	8.6	1.54
K	1350 ± 10%	20.0-35.0	13.5	8.1	1.5	15.5	10.0	6.0	1.10
N	2245 ± 10%	26.0-46.0	17.1	10.5	1.9	12.0	7.6	4.7	0.84

Coil-Data (All Values DC)* Type 3SBC Form AB 50 mW Sensitivity non mil spec: (Code 2)

Coil Code Letter	Coil Resistance @ 25C (ohms)	Voltage Calibrated, Code 5					Current Calibrated, Code 6		
		Suggested Source Volts†	Max. Operate Volts @ 25C	Release Voltage Range @ 25C		Max. Continuous Current @ 125C (mA)	Max. Operate Current @ 25C (mA)	Release Current Range @ 25C (mA)	
				Max.	Min.			Max.	Min.
B	56 ± 10%	2.6-7.0	1.8	1.1	0.16	46.5	29.1	18.2	3.30
C	85 ± 10%	3.3-9.5	2.3	1.4	0.20	38.7	24.2	15.1	2.70
D	140 ± 10%	4.3-12.0	2.9	1.8	0.27	30.4	19.0	11.9	2.10
E	210 ± 10%	5.3-14.0	3.6	2.2	0.33	24.8	15.5	9.7	1.75
F	360 ± 10%	6.7-19.0	4.5	2.8	0.41	18.9	11.8	7.2	1.30
G	510 ± 10%	8.2-23.0	5.6	3.5	0.51	15.8	9.9	6.2	1.10
H	775 ± 10%	10.0-26.0	6.8	4.2	0.62	12.8	8.0	5.0	0.90
K	1350 ± 10%	13.2-35.0	9.0	5.6	0.82	9.8	6.1	3.8	0.68
N	2245 ± 10%	16.8-46.0	11.4	7.1	1.00	7.4	4.6	2.9	0.52

*Values listed are factory test and inspection data. User should allow for meter variations.
†At nominal resistance plus 10%. ‡Applicable over the operating temperature range in circulating air.

See Page 1-42 for ordering instructions.

* The part number example shown on this page is for catalog items. For a list of specific QPL part numbers, please see the index in Section 15.

Dimensions are shown for reference purposes only. Specifications subject to change.

Dimensions are in millimeters unless otherwise specified.

USA: +1 800 522 6752
Asia Pacific: +86 0 400 820 6015
UK: +44 800 267 666

For additional support numbers please visit www.te.com

Double Pole, Electrically Held, 2 Amps and Less (Continued)

.150 Grid-space Hybrid Relays

Single Diode, Dual Diode

Type 3SBC (2PDT)

135 mW

Product Facts

- **Low profile… only 0.32 inches high**
- **50 milliwatt forms available**
- **Qualified to MIL-R-39016/37**
- **Qualified to MIL-R-39016/38**
- **RF designs available**

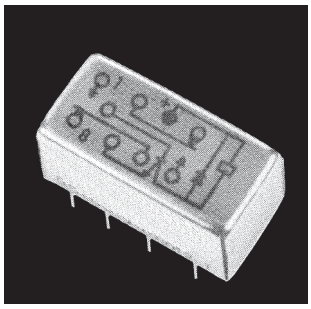

The hybrid .150 Grid-space relay — only 0.32 inches high — saves space in electronic packaging. The pin spacing allows you to insert the relay with no intermediate pin spreader.

Electrical Characteristics

Contact Ratings —
DC resistive — 2 amps at 28 volts (50,000 operations)
1 Amp @ 28 V (100,000 operations)
DC inductive — 0.5 amps at 28 volts, 200 mH
AC resistive — 0.5 amps at 115 volts
AC — 0.125 amps at 115 volts (case grounded)
Low-level — 50 µA at 50 mV Peak AC or DC

Contact Resistance —
0.050 ohms max.; 0.150 ohms after life test

Life — 100,000 operations at rated loads listed; 1,000,000 operations at low-level loads

Operating Characteristics

Operate Time — 4 ms max.

Release Time — 6 ms max.

Contact Bounce — 1.5 ms

Dielectric Strength (Note 1) —
500 volts rms at sea level;
350 volts rms at 70,000 feet and above

Insulation Resistance (Note 1) —
1,000 megohm min. over temperature range

Environmental Characteristics

Vibration — 30G, to 3000 Hz

Shock — 100 G at 11 ms

Temperature — -65°C to +125°C

Semiconductor Characteristics at 25°C

Diode —
Max. Negative Transient — 1.0 volt
Breakdown Voltage — 100 VDC @ 10 µA
Max. Leakage Current — 1 µA @ 50 VDC

See page 1-44 for Mounting Forms, Terminals and Circuit Diagrams.

Coil Table Single Diode (All Values DC)*(2DPT), 135 mW Sensitivity: (Code 5)

Coil Code Letter	Coil Resistance @ 25C (ohms)	Voltage Calibrated, Code 5				Current Calibrated, Code 6			
		Suggested Source Volts†	Max. Operate Volts @ 25C	Release Voltage Range @ 25C		Max. Continuous Current @ 125C (mA)	Max. Operate Current @ 25C (mA)	Release Current Range @ 25C (mA)	
				Max.	Min.			Max.	Min.
A	44 ± 10%	3.5- 6.2	2.4	1.45	0.26	87.0	54.5	32.7	6.00
B	56 ± 10%	4.0- 7.0	2.7	1.6	0.3	77.0	48.3	28.6	5.30
D	140 ± 10%	6.4-12.0	4.4	2.6	0.5	50.3	31.4	18.5	3.60
E	210 ± 10%	8.0-16.0	5.4	3.2	0.6	40.0	25.7	15.4	2.80
L	650 ± 10%	13.6-24.0	9.5	5.6	1.0	22.9	14.3	8.6	1.54
K	1350 ± 10%	20.0-35.0	13.5	8.1	1.5	15.5	10.0	6.0	1.10
N	2245 ± 10%	26.0-46.0	17.1	10.5	1.9	12.0	7.6	4.7	0.84

Coil Table Dual Diode (All Values DC)*(2DPT), 135 mW Sensitivity: (Code 6)

	**								
A	44 ± 10%	3.9- 7.0	3.4	2.0	0.37	98.2	77.3	45.5	8.4
B	56 ± 10%	4.6- 8.0	3.7	2.2	0.41	89.8	66.1	39.3	7.1
D	140 ± 10%	7.8-12.0	5.4	3.2	0.6	52.4	38.6	22.9	4.3
E	210 ± 10%	9.3-16.0	6.4	3.8	0.7	41.4	30.5	18.1	3.3
L	650 ± 10%	15.0-24.0	10.5	6.2	1.1	23.6	16.2	9.5	1.7
K	1350 ± 10%	21.0-35.0	14.5	8.7	1.6	16.0	10.7	6.4	1.2
N	2245 ± 10%	27.0-46.0	18.1	10.9	2.0	12.1	8.1	4.9	0.9

Ordering Instructions

Example: The relay selected in the example is a FORM AB .150-grid relay, current calibrated, end bracket mounting with 0.13-inch solder hook header, 210 ohms coil resistance, and 50 mW sensitivity. By choosing the proper code for each of these relay characteristics, the catalog number is 3SBC6131E2. The letter R following sensitivity code indicates relay received 5000 operation miss-test. Ex. 3SBC6131E2R.

Note: Relays specified by catalog numbers (per above directions) are general use items controlled by catalog specifications. Relays to be controlled by customer drawings — or relays having requirements not covered in this publication — will be assigned special catalog numbers upon request.

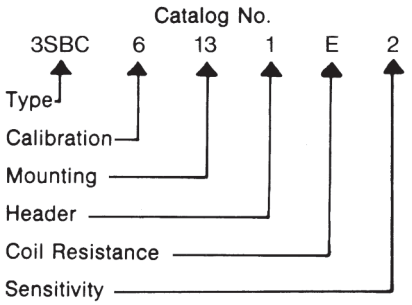

* The part number example shown on this page is for catalog items. For a list of specific QPL part numbers, please see the index in Section 15.

Catalog 5-1773450-5
Revised 3-13

www.te.com

Dimensions are shown for reference purposes only. Specifications subject to change.

Dimensions are in millimeters unless otherwise specified.

USA: +1 800 522 6752
Asia Pacific: +86 0 400 820 6015
UK: +44 800 267 666

For additional support numbers please visit www.te.com

Double Pole, Electrically Held, 2 Amps and Less (Continued)

.150 Grid-space Long-life Relays

Type 3SCC (2PDT)

170 mW

Product Facts

- **100,000,000 operations low-level signal loads**
- **RF designs available**
- **Low profile — 0.32 height**
- **Hermetic seal**
- **High reliability**
- **Performance tested**

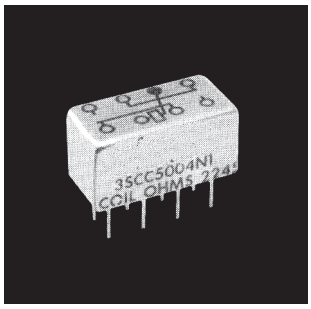

The .150 Grid relay, the smallest (.320 inches high) 2 Amp rated relay available in commercial and military qualified models, is now available in the long life version. Capable of over 100,000,000 mechanical operations at low level and signal load, the .150 Grid relay provides the simplicity of relays for circuit design, the low circuit resistance of precious metal contact systems, and the long life processing that has made CII relays the standard for quality and reliability.

Electrical Characteristics

Contact Ratings —
DC resistive — 2 amps at 28 volts (50,000 operations)
1 Amp @ 28 V (100,000 operations)
DC inductive — 0.5 amps at 28 volts, 200 mH
AC resistive — 0.5 amps at 115 volts
AC — 0.125 amps at 115 volts (case grounded)
Low-level — 50 µA at 50 mV
Peak AC or DC

Contact Resistance —
0.050 ohms max.; 0.150 ohms after life test

Life — 100,000 operations at rated loads listed; 1,000,000 operations at low-level loads

Operating Characteristics

Operate Time — 4 ms max.

Release Time — 4 ms max.

Contact Bounce — 1.5 ms

Dielectric Strength —
500 volts rms at sea level;
350 volts rms at 70,000 feet and above

Insulation Resistance — 1,000 megohm min. over temperature range

Environmental Characteristics

Vibration — 30G, to 3000 Hz

Shock — 100 G at 11 ms

Temperature — -40°C to +125°C

See page 1-44 for Mounting Forms, Terminals and Circuit Diagrams.

Coil Table Type 3SCC (All Values DC)* 2 PDT Relay — 170mW Sensitivity: (Code 1)

Coil Code Letter	Coil Resistance @ 25C (ohms)	Voltage Calibrated, Code 5				Current Calibrated, Code 6			
		Suggested Source Volts†	Max. Operate Volts @25C	Release Voltage Range @ 25C		Max. Continuous Current @ 125C (mA)	Max. Operate Current @ 25C (mA)	Release Current Range @ 25C (mA)	
				Max.	Min.			Max.	Min.
A	44 ± 10%	3.5- 6.2	2.7	1.45	0.26	87.0	61.4	32.7	6.00
B	56 ± 10%	4.0- 7.0	3.1	1.6	0.3	77.0	55.4	28.6	5.30
D	140 ± 10%	6.4-12.0	4.9	2.6	0.5	50.3	35.0	18.5	3.60
E	210 ± 10%	8.0-16.0	5.9	3.2	0.6	40.0	28.0	15.4	2.80
L	650 ± 10%	13.6-24.0	10.5	5.6	1.0	22.9	16.2	8.6	1.54
K	1350 ± 10%	20.0-35.0	15.1	8.1	1.5	15.5	11.2	6.0	1.10
N	2245 ± 10%	26.0-46.0	19.5	10.5	1.9	12.0	8.7	4.7	0.84

*Values listed are factory test and inspection data. User should allow for meter variations.
†Applicable over the operating temperature range in circulating air.

Ordering Instructions

Example: The relay selected in the example is a 2PDT .150-grid relay, current calibrated, end bracket mounting with 0.13-inch solder hook header, 210 ohms coil resistance, and 175 mW sensitivity. By choosing the proper code for each of these relay characteristics, the catalog number is 3SCC6131E1. The letter R following sensitivity code indicates relay received 5000 operation miss-test. Ex. 3SCC6131E1R.

Note: Relays specified by catalog numbers (per above directions) are general use items controlled by catalog specifications. Relays to be controlled by customer drawings — or relays having requirements not covered in this publication — will be assigned special catalog numbers upon request.

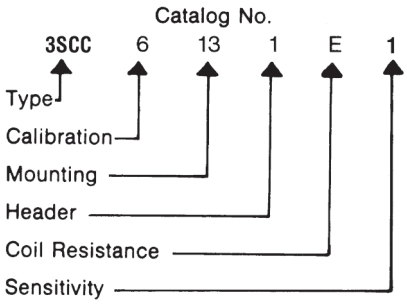

Dimensions are shown for reference purposes only. Specifications subject to change.

Dimensions are in millimeters unless otherwise specified.

USA: +1 800 522 6752
Asia Pacific: +86 0 400 820 6015
UK: +44 800 267 666

For additional support numbers please visit www.te.com

Double Pole, Electrically Held, 2 Amps and Less (Continued)

Mounting Forms (3SBC, 3SCC)

(Vibration note with each form is acceleration from 55 to 3000 Hz)

All dimensions in inches

TOLERANCES (Unless otherwise specified)	
Hundredths	±0.020
Thousandths	±0.005

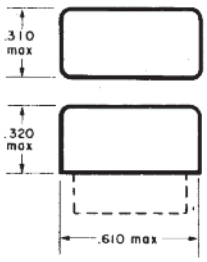

No Mount

Mounting Code	Vibration
00	30g

*Assumes relay held securely by potting or other means

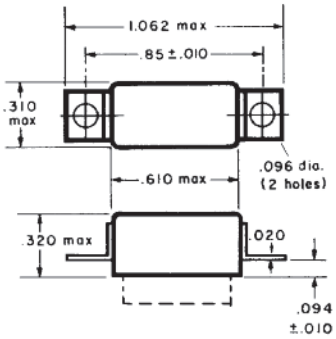

End Bracket

Mounting Code	Vibration
13	30g

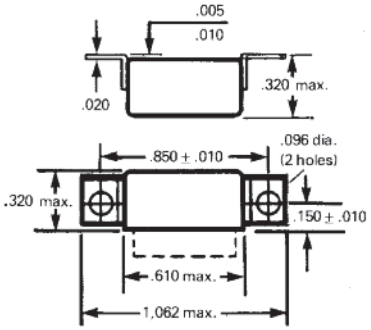

Side Bracket

Mounting Code	Vibration
25	30g

Header and Connection Diagrams

Header Types

TYPE	Z DIMENSION	HEADER CODE
Solder hook	0.13	1
Straight pin	0.12	8
Straight pin	0.19	4
Straight pin	0.25	5

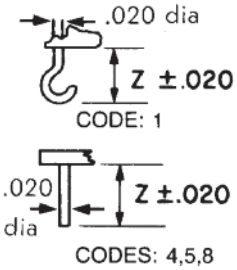

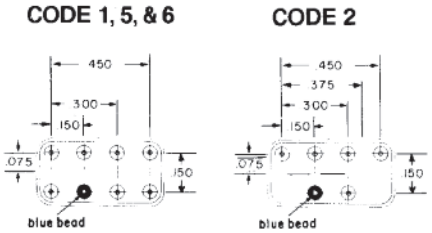

Terminal View

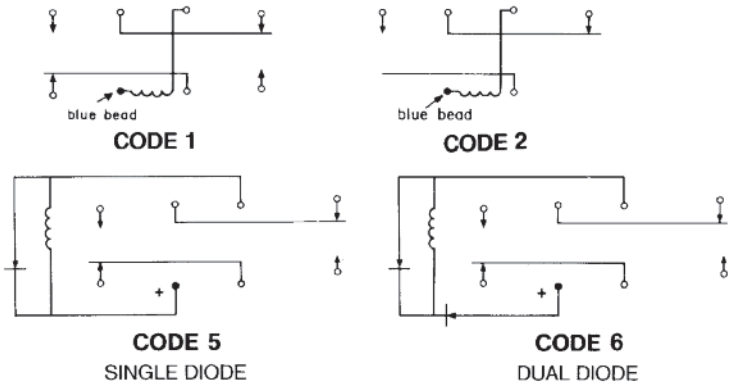

Double Pole, Electrically Held, 2 Amps and Less (Continued)

Crystal-Can Relays

Type 3SAE (2PDT)
Type 3SAC (2PDT)

Product Facts

- **Small lightweight crystal-can type**
- **0.25 cubic inch, 0.60 ounces**
- **Power or low-level switching**
- **20G to 2000 Hz vibration capability**

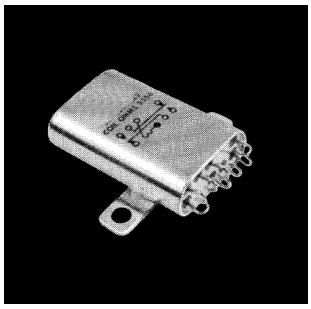

The TE Connectivity line of crystal-can relays is backed by years of experience and millions of relays operating in the field.

Electrical Characteristics

Contact Ratings —
DC resistive — 2 amps at 28 volts
DC inductive — 1 amp at 28 volts, L/R < .025
Low-level — 50 µA at 50 mV
Peak AC or DC
AC resistive — 1.0 amp at 115 volts, case not grounded
AC resistive — 0.25 amps at 115 volts, case grounded

Contact Resistance —
0.050 ohms max. initial;
0.100 ohms max. after life test

Life — 100,000 operations at rated load; 1,000,000 at low-level

Operating Characteristics

Operate Time — 6 ms max.

Release Time — 5 ms max.

Contact Bounce — 2.5 ms

Dielectric Strength —
1,000 volts rms at sea level;
700 volts rms across contact gaps;
350 volts rms at 70,000 feet

Insulation Resistance —
1,000 megohm min. except coil to case 500 min. at 125°C

Environmental Characteristics

Vibration — Depends upon mounting forms

Shock — 50 G at 11 ms

Temperature — -65°C to +125°C

See page 1-46 for Mounting Forms, Terminals and Circuit Diagrams.

Coil Table (All Values DC)* Type 3SAE 330 mW Sensitivity: (Code 1)

Coil Code Letter	Voltage Calibrated, CODE: 5				
	Coil Resistance at 25C (Ohms)	Suggested Source Volts†	Maximum Operate Volts at 25C	Release Voltage at 25C	
				Max	Min
A	22 ± 10%	3.9– 5.9	2.7	1.4	0.29
B	34 ± 10%	4.8– 7.4	3.3	1.7	0.36
C	53 ± 10%	6.2– 9.2	4.2	2.2	0.46
D	92 ± 10%	8.0–12.0	5.4	2.8	0.60
E	146 ± 10%	10.2–15.0	6.9	3.6	0.76
F	215 ± 10%	12.3–18.5	8.3	4.3	0.92
H	342 ± 10%	15.4–23.0	10.4	5.4	1.16
K	552 ± 10%	20.0–29.5	13.5	7.0	1.50
L	814 ± 10%	25.0–36.0	16.9	8.8	1.88
M	1180 ± 10%	30.0–43.0	20.5	10.6	2.28
N	1278 ± 15%	31.0–41.5	21.3	11.0	2.36
P	1800 ± 15%	38.0–49.0	25.8	13.3	2.86
R	2530 ± 15%	43.0–58.5	29.0	15.0	3.22
S	2950 ± 15%	50.0–63.0	34.0	17.5	3.77
T	5000 ± 20%	62.0–75.0	41.8	21.6	4.64
V	5170 ± 20%	68.0–76.0	46.0	25.4	5.12

Coil Table (All Values DC)* Type 3SAC 200 mW Sensitivity: (Code 2)

Coil Code Letter	Current Calibrated, CODE: 6				
	Coil Resistance at 25C (Ohms)	Maximum Operate Current at 25C (mA)	Maximum Continuous Current at 125C (mA)	Release Current at 25C (mA)	
				Max	Min
A	184 ± 10%	32.0	65.0	16.5	3.53
B	292 ± 10%	25.6	51.5	13.3	2.84
C	430 ± 10%	20.8	42.5	10.8	2.31
D	684 ± 10%	16.4	33.5	8.5	1.80
E	1104 ± 10%	13.2	26.5	6.9	1.46
F	1628 ± 10%	11.2	21.7	5.8	1.24
H	2360 ± 15%	9.4	16.8	4.9	1.04
K	2556 ± 15%	9.0	16.2	4.7	0.99
L	3600 ± 15%	7.7	13.5	4.1	0.86
M	5060 ± 15%	6.2	11.5	3.3	0.69
N	5900 ± 15%	6.2	10.5	3.3	0.71
P	10000 ± 20%	4.5	7.5	2.4	0.50
R	10340 ± 20%	4.8	7.4	2.5	0.54

*Values listed are factory test and inspection values. User should allow for meter variations.
†Applicable over the operating temperature range in circulating air.

Ordering Instructions

Example: The relay selected in this example is a 2PDT crystal-can relay, voltage calibrated, two-hole side bracket mounting solder hook header, 552 ohms coil resistance, and 330 mW sensitivity. By choosing the proper code for each of these relay characteristics, the catalog number is identified as 3SAE5041K1. The letter R following sensitivity code indicates relay received 5000 operation miss-test. Ex. 3SAE5041K1R.

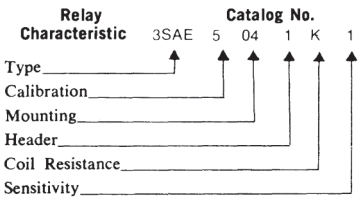

Catalog 5-1773450-5
Revised 3-13

www.te.com

Dimensions are shown for reference purposes only. Specifications subject to change.

Dimensions are in millimeters unless otherwise specified.

USA: +1 800 522 6752
Asia Pacific: +86 0 400 820 6015
UK: +44 800 267 666

For additional support numbers please visit www.te.com

Double Pole, Electrically Held, 2 Amps and Less (Continued)

Mounting Forms (3SAC, 3SAE)

(Vibration note with each form is acceleration from 55 to 2000 Hz)

All dimensions in inches

TOLERANCES (unless otherwise specified)	
Hundredths	±0.020
Thousandths	±0.005

No Mount

Mounting Code	A Dim. (Max)	Vibration*	Relay Type
00	0.875	20g	3SAE
00	1.187	15g	3SAC

* Assumes relay securely held by potting or other means.

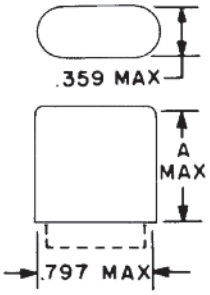

Flange Mount, 2 in-line holes

Mounting Code	A Dim. (Max)	X Dim.	Vibration	Relay Type
13	0.875	0.125	15g	3SAE
13	1.187	0.125	10g	3SAC
14	0.875	0.375	20g	3SAE
14	1.187	0.455	15g	3SAC

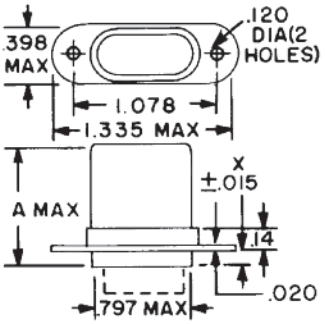

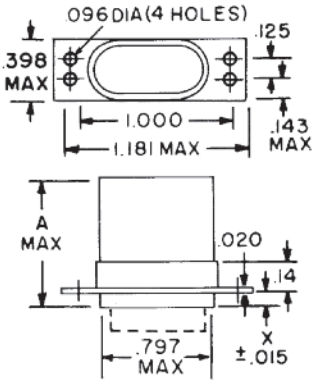

Four-hole Flange

Mounting Code	A Dim. (Max)	X Dim.	Vibration	Relay Type
01	0.875	0.125	15g	3SAE
01	1.187	0.125	10g	3SAC
02	0.875	0.375	20g	3SAE
02	1.187	0.455	15g	3SAC

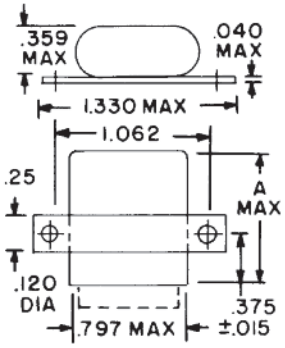

Two-hole Side Bracket

Mounting Code	A Dim. (Max)	Vibration	Relay Type
04	0.875	20g	3SAE
04	1.187	15g	3SAC

Side Studs

Mounting Code	A Dim. (Max)	C Dim.	X Dim.	Vibration	Relay Type
07	0.875	0.488	0.375	20g	3SAE
07	1.187	0.800	0.375	15g	3SAC
08	0.875	0.488	0.250	20g	3SAE
08	1.187	0.800	0.250	15g	3SAC

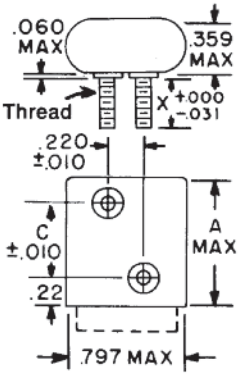

Top Studs

Mounting Code	A Dim. (Max)	X Dim.	Vibration	Relay Type
10	0.940	0.375	20g	3SAE
10	1.252	0.375	15g	3SAC
11	0.940	0.250	20g	3SAE
11	1.252	0.250	15g	3SAC

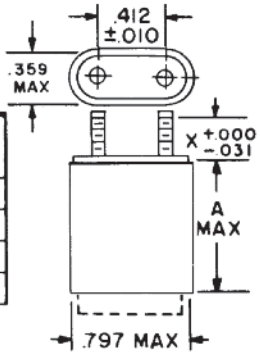

Header and Connection Diagrams

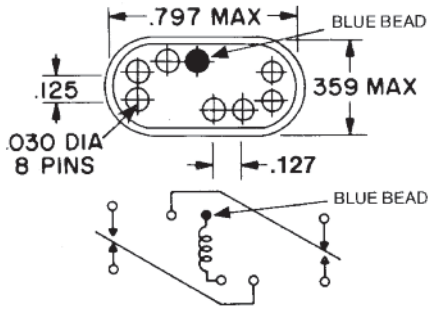

Header Types

Type	Z Dim.	Header Code
Solder hook	0.19	2
Straight pin (socket or PCB type)	0.19	4
Straight pin	2.99	8

CODE: 1

CODES: 4, 8

Catalog 5-1773450-5
Revised 3-13

www.te.com

Dimensions are shown for reference purposes only. Specifications subject to change.

Dimensions are in millimeters unless otherwise specified.

USA: +1 800 522 6752
Asia Pacific: +86 0 400 820 6015
UK: +44 800 267 666

For additional support numbers please visit www.te.com

Double Pole, Magnetic Latching, 2 Amps and Less

LS

LS

Magnetic Latching Half Size High Performance Relay

DESIGNED to MIL-R-39016/45

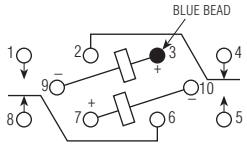

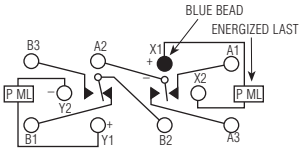

Terminal View

Standard Schematic Contacts will switch from the indicated position when either coil is energized with polarity as shown.

MIL-R-39016/45 SCHEMATIC Contacts will switch from the indicated position when either coil is energized with polarity as shown.

Product Facts

- **Hermetically sealed**
- **Up to 2 amps switching**
- **High shock & vibration ratings**
- **Optional terminals & mounting styles**
- **Latching design**

Electrical Characteristics

Contact Arrangement — 2 Form C (DPDT)

Contact Material —
Stationary —
Gold plated hardened silver alloy
Moveable —
Gold plated hardened silver alloy

Contact Resistance —
Before Life — 50 milliohms max. (measured at 10 mA @ 6 Vdc)
After Life — 100 milliohms max. (measured @ 2 A @ 28 Vdc)

Mechanical Life Expectancy — 1 million operations min.

Coil Voltage — 5 to 48 Vdc

Coil Power — 1.0 watts max.

Duty Cycle — Continuous

Pick-up Voltage — Approximately 50% of nominal coil voltage

Pick-up Sensitivity — 170 mW

Contact Ratings

Contact Load	Type	Operations Min.
2 A @ 28 Vdc	Resistive	100,000
0.3 A @ 115 Vac, 60 Hz & 400 Hz	Resistive	100,000
0.75 A @ 28 Vdc	Inductive (200mH)	100,000
0.1 A @ 28 Vdc	Intermediate	50,000
0.160 A @ 28 Vdc	Lamp	100,000
30 µA @ 50 mVdc	Low Level	1,000,000

RF Performance

Frequency (MHz)	RF Losses (dB)	VSWR	Isolation (dB)
100	0.1	1.15:1	38
500	0.3	1.19:1	31
1000	0.6	1.32:1	45

Catalog 5-1773450-5
Revised 3-13

www.te.com

Dimensions are shown for reference purposes only. Specifications subject to change.

Dimensions are in millimeters unless otherwise specified.

USA: +1 800 522 6752
Asia Pacific: +86 0 400 820 6015
UK: +44 800 267 666

For additional support numbers please visit www.te.com

Double Pole, Magnetic Latching, 2 Amps and Less (Continued)

LS (Continued)

Operating Characteristics

Timing —
Set-Reset Time — 5.0 ms max.

Contact Bounce —
2.0 ms max.

Dielectric Withstanding Voltage —
Between Open Contacts —
500 Vrms 60 Hz
Between Adjacent Contacts —
1000 Vrms 60 Hz
Between Contacts and Coil —
1000 Vrms 60 Hz

Insulation Resistance —
10,000 megohms min. @ 500 Vdc

Environmental Characteristics

Temperature Range —
-65°C to +125°C

Weight — .46 oz (13 gms) max.

Vibration Resistance —
Standard — 20 G's, 10 to 2,000 Hz
QPL Equiv. — 30 G's, 10 to 2,500 Hz

Shock Resistance —
100 G's, 6 ±1 ms

QPL Equivalent —
MIL-R-39016/45

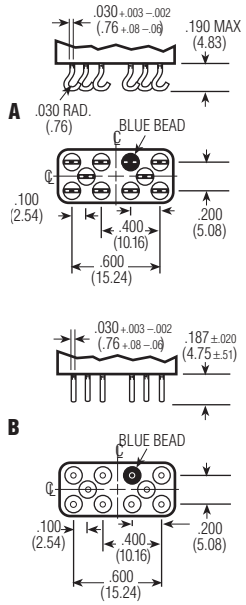

LS Terminals

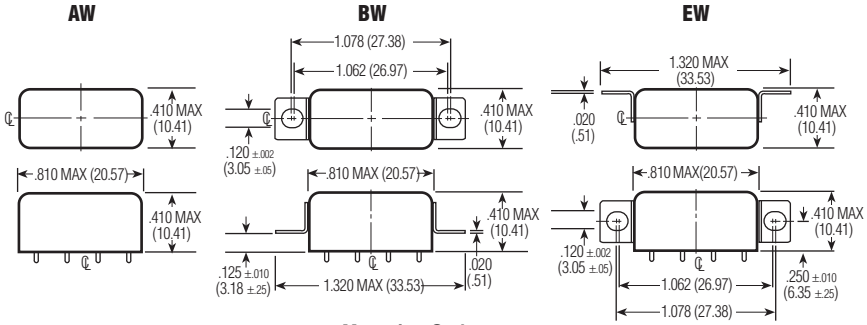

Mounting Styles

Standard Coil Data

Nom. Coil Voltage (Vdc)	Coil Resistance in Ohms ±10% @ 25°C	Pickup Voltage Vdc (Max.) @ 25°C	Pickup Voltage Vdc (Max.) @ 125°C	Pickup Voltage Vdc (Min.) @ 25°C	Pickup Voltage Vdc (Min.) @ -65°C	Nom. Coil Power (mW) @ 25°C	Max. Coil Voltage	Coil Desig.
5.0	45	2.7	3.8	1.6	1.0	556	6.7	5
6.0	63	3.25	4.5	2.0	1.3	571	8.0	6
12.0	254	6.5	9.0	4.0	2.6	567	16.0	12
26.5	1,000	13.0	18.0	8.0	5.2	702	32.0	24
48.0	3,800	26.0	36.0	16.0	10.4	606	64.0	48

Ordering Instructions

Catalog-selected Relays: The catalog number is derived by choosing the proper CODE for each of the six relay characteristics in the order in which the codes are listed.

Specifying a Part Number Example:	Type	Mountings	Contacts	Coils	Terminals
	LS	BW-	2C-	24	B

Dimensions are shown for reference purposes only. Specifications subject to change.

Dimensions are in millimeters unless otherwise specified.

USA: +1 800 522 6752
Asia Pacific: +86 0 400 820 6015
UK: +44 800 267 666

For additional support numbers please visit www.te.com

Double Pole, Magnetic Latching, 2 Amps and Less (Continued)

Magnetic Latching, Grid Space, Relay

Type 3SDM (2PDT)

Product Facts

- **Suitable for pulse operation**
- **No hang up feature**
- **MIL-R-39016 type**
- **Special contact and coil wiring available**

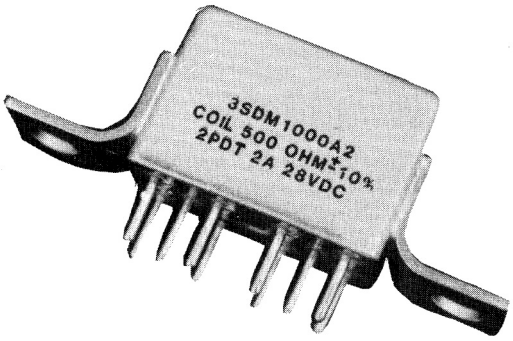

This magnetic latching relay maintains the high reliability attributes of the aerospace proven CII 3SAM relay family. By reducing the size of the coil and maintaining the contact system of the 3SAM, we can now offer a smaller 2 amp rated magnetic latching relay. The pulse operation can provide multiple hundred thousand operations in power saving circuits. The on or off circuits are maintained using no power until there is a need to switch the contacts. Suitable for matrix switches or relay trees, these versatile relays have contact systems capable of reliability switching high power or very low level signals in the same package. The relay's unique circuit prevents it from ever hanging up in an off-center or neutral position.

Electrical Characteristics

Contact Ratings —
DC resistive — 2 amps at 28 volts
Low-level — 50 µA at 50 mV DC or peak AC

Contact Resistance —
0.050 ohms initial;
0.100 ohms after life test (High level)
0.150 ohms after life test (Low level)

Life —
100,000 operations at rated load;
1,000,000 operations at low-level

Operating Characteristics

Operate Time — 4 ms

Reset Time — 4 ms

Contact Bounce — 2 ms

Dielectric Strength —
1,000 volts at sea level;
500 volts across contact gap and 500 volts coil to case

Insulation Resistance —
1,000 megohms min.

Environmental Characteristics

Vibration —
Sine — 30G; 55 to 3000 Hz
Random — 0.4 G^2/Hz; 100 to 1,000 Hz

Shock — 150 G at 11 ms, half-sine wave

Temperature — -65°C to +125°C

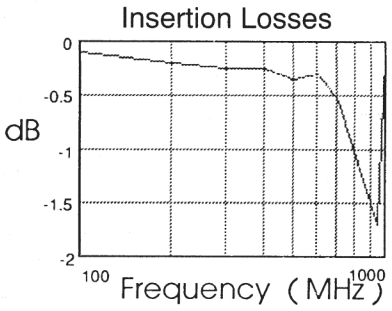

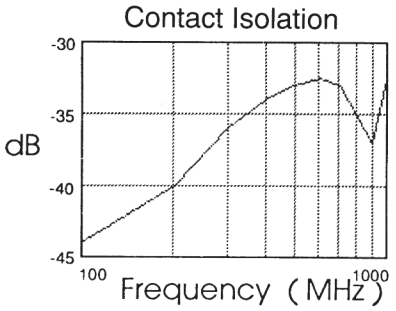

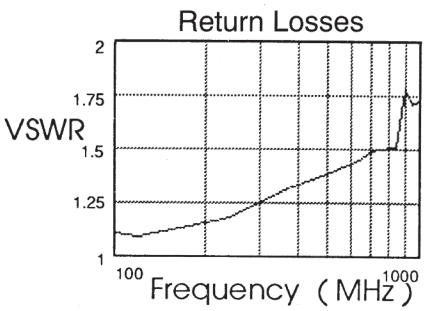

Catalog 5-1773450-5
Revised 3-13

www.te.com

Dimensions are shown for reference purposes only. Specifications subject to change.

Dimensions are in millimeters unless otherwise specified.

USA: +1 800 522 6752
Asia Pacific: +86 0 400 820 6015
UK: +44 800 267 666

For additional support numbers please visit www.te.com

Double Pole, Magnetic Latching, 2 Amps and Less (Continued)

Mounting Forms (3SDM)

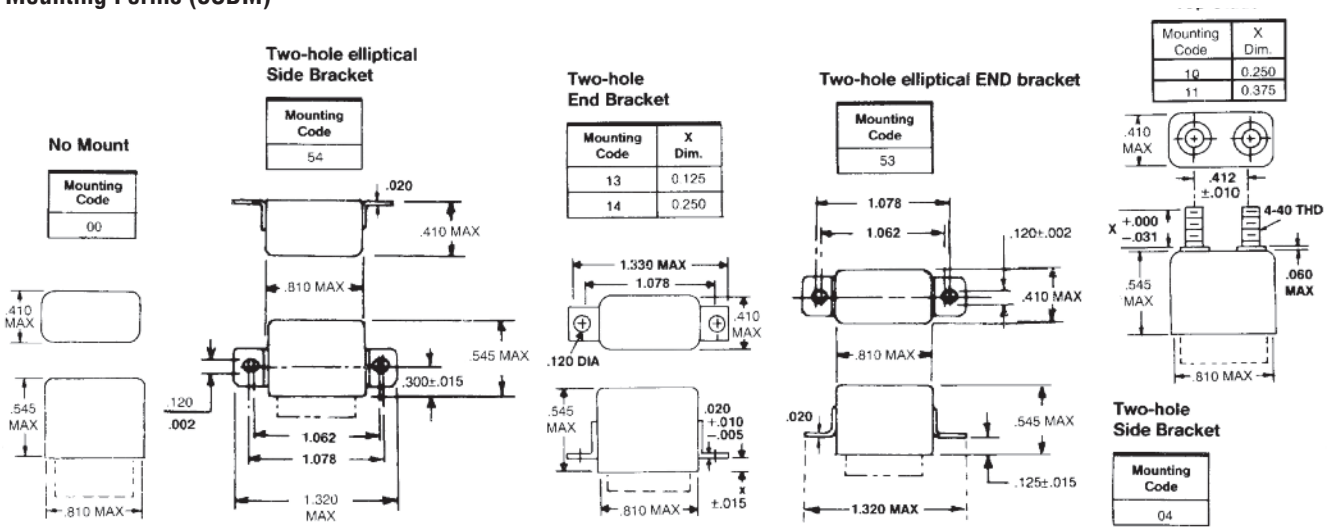

Coil Resistance (All Values are DC): Voltage Calibrated - Code 5

Coil Resistance Code	Coil Voltage Rated	Coil Voltage Maximum	Coil Res. Ohms @ 20ºC	Max. Set-Reset VDC @ 20ºC	Max. Set-Reset VDC @ 125ºC
C	6	7	31 +/- 10%	3.0	5.3
E	12	14	124 +/- 10%	6.0	10.5
H	24	28	500 +/- 10%	12.0	21.0

Values are factory test and inspection values. User should allow for meter variations.

Header:

Type	Z Dimensions	Header Code
Straight Pin (socket or PCB Type)	0.19 +/-.020	4
Solder Hook	0.16 +/-.020	2

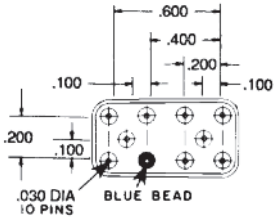

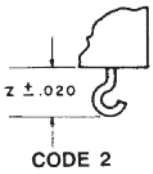

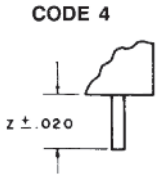

Sensitivity and Modification: 290 mW Sensitivity

Sensitivity Code	Modification (see connection diagrams at right)
1	No Diode
5	Single Diode

(Terminal View)
(+ on blue bead closes as shown)

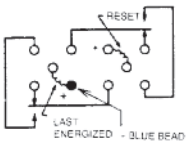

SCHEMATIC DIAGRAM
TERMINAL VIEW
CODE 1

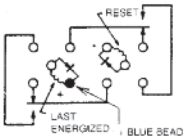

SCHEMATIC DIAGRAM
TERMINAL VIEW WITH DIODE
CODE 5

Ordering Instructions

Type 3SDM relays can be ordered by specifying the correct catalog number. This number is derived by choosing the proper CODE for each of the six relay characteristics in the order in which the codes are listed in the example. The letter R following the sensitivity code indicates relay received 5,000 operations miss-test.

Example: The relay selected is a 2PDT magnetic-latching relay, voltage calibrated, 2-hole end bracket mount, solder hook header, 500 ohm coil, and 290 mW sensitivity. **3SDM5132H1**

Relay Characteristic Catalog Number

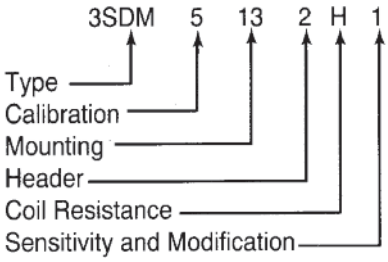

Catalog 5-1773450-5
Revised 3-13

www.te.com

Dimensions are shown for reference purposes only. Specifications subject to change.

Dimensions are in millimeters unless otherwise specified.

USA: +1 800 522 6752
Asia Pacific: +86 0 400 820 6015
UK: +44 800 267 666

For additional support numbers please visit www.te.com

Double Pole, Magnetic Latching, 2 Amps and Less (Continued)

Magnetic Latching, Grid-space, Relays

Type 3SAM (2PDT)

Product Facts

- **Special shock designs up to 700 G, 1 ms**
- **Suitable for pulse operation**
- **No hang up feature on low power pulses**
- **Qualified to MIL-R-39016/32**
- **Special wiring is available**

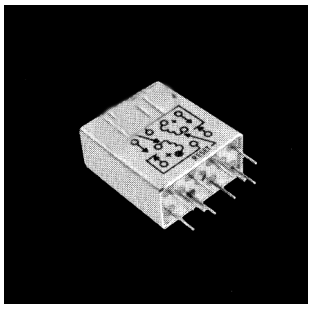

This relay has "memory" in that the contact positions do not change when coil power is removed. Switching is accomplished by applying power to the applicable coil (dual coil) or with the applicable polarity (single coil). The low switching power requirements are further enhanced by its ability to operate from capacitor discharge or other pulses or through its own contacts for batteries or similarly limited supplies.

Electrical Characteristics

Contact Ratings —
DC resistive — 2 amps at 28 volts
DC inductive — 0.5 amps at 28 volts, 200 mH
AC resistive — 1 amp at 115 volts (single coil), case not grounded
AC resistive — 0.25 amps at 115 volts (dual coil), case not grounded
Low-level — 50 µA at 50 mV Peak AC or DC

Contact Resistance —
0.050 ohms initial;
0.100 ohms after life test

Life —
100,000 operations at rated load;
1,000,000 at low-level

Operating Characteristics

Operate Time — 4 ms

Release Time — 4 ms

Contact Bounce — 2 ms

Dielectric Strength —
1,000 volts rms at sea level;
700 volts rms across contact gap

Insulation Resistance —
1,000 megohm min.

Environmental Characteristics

Vibration — 30 G, to 3,000 Hz

Shock — 150 G at 11 ms

Temperature — -65°C to +125°C

See page 1-52 for Mounting Forms, Terminals and Circuit Diagrams.

Coil Table (All Values DC) Single Coil 50 mW Sensitivity: (Code: 1)

Coil Code Letter	Current Calibrated, CODE: 6		
	Coil Resistance @25C (Ohms)	Max Operate and Reset Current (mA) ‡	Suggested Source Voltage†
A	16.4 ± 10%	55.2	1.8–4.8
B	40 ± 10%	35.3	2.7–7.5
C	96 ± 10%	22.8	4.2–11.0
D	164 ± 10%	17.4	5.5–15.0
E	260 ± 10%	13.9	7.0–19.0
F	400 ± 10%	11.2	8.5–23.0
H	600 ± 10%	9.2	11.0–29.0
K	960 ± 10%	7.2	13.0–37.0
L	1350 ± 10%	6.1	16.0–43.0
M	1950 ± 10%	5.1	19.0–52.0
N	3000 ± 15%	4.1	25.0–64.0
P	4800 ± 15%	3.3	32.0–81.0
R*	8200 ± 20%	2.5	43.0–99.0

† Applicable over the operating temperature range in circulating air.
‡ Initial or inspection value. Allow 20% increase in value of maximum pickup during rated life.

Coil Table (All Values DC) Dual Coil 75 mW Sensitivity: (Code: 2)

Coil Code Letter	Current Calibrated, CODE: 6		
	Coil Resistance @25C For Each Coil (Ohms)	Max‡ Operate Current For Each Coil (mA)	Suggested Source Voltage For Each Coil†
A	8.2 ± 10%	95.8	1.5–2.6
B	20 ± 10%	61.2	2.3–4.1
C	48 ± 10%	39.5	3.6–6.3
D	82 ± 10%	30.2	4.7–8.3
E	130 ± 10%	24.0	6.0–10.0
F	200± 10%	19.4	7.4–13.0
H	300 ± 10%	15.8	9.0–16.0
K	480 ± 10%	12.5	12.0–20.0
L	675 ± 10%	10.6	14.0–24.0
M	975 ± 10%	8.8	16.0–29.0
N	1500 ± 15%	7.1	21.0–35.0
P	2400 ± 15%	5.6	27.0–44.0
R	4100 ± 20%	4.3	37.0–55.0

† Applicable over the operating temperature range in circulating air.
‡ Initial or inspection value. Allow 20% increase in value of maximum pickup during rated life.

Ordering Instructions

Example: The relay selected in this example is a 2PDT magnetic latching relay, current calibrated, four-hole end bracket mounting, solder hook header, 1500 ohms coil resistance, and 75 mW sensitivity. By choosing the proper code for each of these relay characteristics, the catalog number is identified as 3SAM6014N2. The letter R following sensitivity code indicates relay received 5000 operation miss-test. Ex. 3SAM6014N2R.

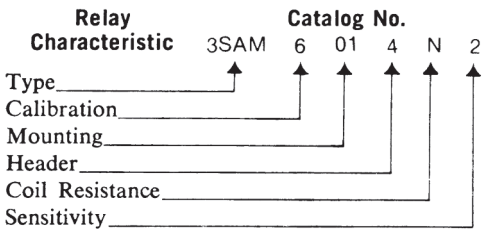

* The part number example shown on this page is for catalog items. For a list of specific QPL part numbers, please see the index in Section 15.

Catalog 5-1773450-5
Revised 3-13

www.te.com

Dimensions are shown for reference purposes only. Specifications subject to change.

Dimensions are in millimeters unless otherwise specified.

USA: +1 800 522 6752
Asia Pacific: +86 0 400 820 6015
UK: +44 800 267 666

For additional support numbers please visit www.te.com

Double Pole, Magnetic Latching, 2 Amps and Less (Continued)

Mounting Forms (3SAM)

(Vibration note with each form is acceleration from 55 to 3000 Hz)

No Mount

Mounting Code	Vibration*
00	30g

* Assumes relay securely held by potting or other means.

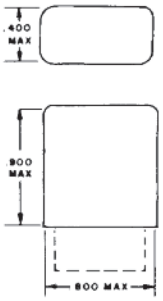

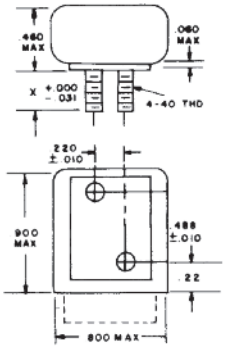

Two-hole End Bracket

Mounting Code	X Dim.	Vibration
13	0.125	30g
14	0.250	30g
15	0.450	30g

Side Studs

Mounting Code	X Dim.	Vibration
07	0.250	30g
08	0.375	30g

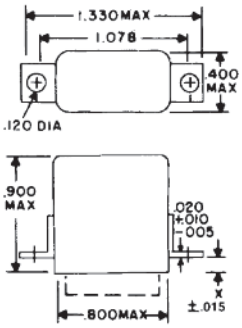

All dimensions in inches

TOLERANCES (unless otherwise specified)	
Hundredths	±0.020
Thousandths	±0.005

Top Studs

Mounting Code	X Dim.	Vibration
10	0.250	30g
11	0.375	30g

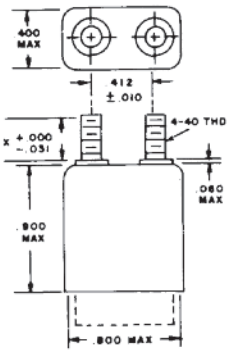

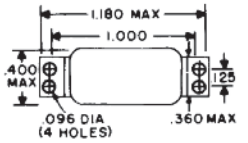

Four-hole End Bracket

Mounting Code	X Dim.	Vibration
01	0.125	30g
02	0.250	30g
03	0.450	30g

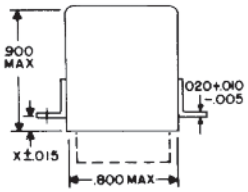

Four-hole Side Bracket

Mounting Code	Vibration
06	30g

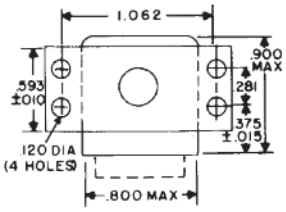

Header and Connection Diagrams

Single Coil **Dual Coil**

(Terminal View)
(+ on blue bead closes as shown)

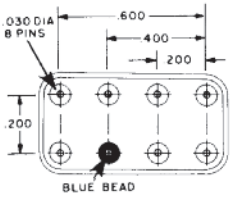

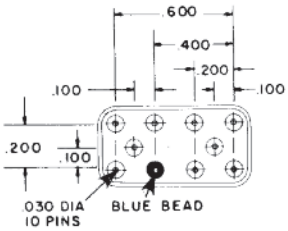

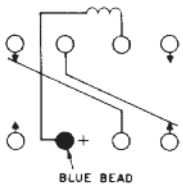

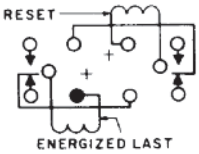

Header Types

Type	Z Dimension	Header Code	
		Single	Dual
Solder hook	0.16	1	4
Straight pin (socket or PCB type)	0.19	2	5

CODES: 2, 5

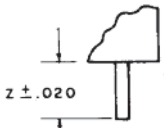

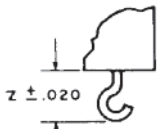

CODES: 1, 4

Catalog 5-1773450-5
Revised 3-13

www.te.com

Dimensions are shown for reference purposes only. Specifications subject to change.

Dimensions are in millimeters unless otherwise specified.

USA: +1 800 522 6752
Asia Pacific: +86 0 400 820 6015
UK: +44 800 267 666

For additional support numbers please visit www.te.com

Four Pole, Electrically Held, 2 Amps and Less

SR

SR

Four Pole Half Size High Performance Relay

Qualified to MIL-R-39016/40

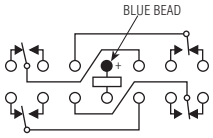

Terminal View

Product Facts

- **Hermetically sealed**
- **Up to 2 amps switching**
- **High shock & vibration ratings**
- **Optional terminals & mounting styles**
- **4 form C Hi-density design**

Electrical Characteristics

Contact Arrangement — 4 Form C (4PDT)

Contact Material —
Stationary —
Gold plated hardened silver alloy
Moveable —
Gold plated hardened silver alloy

Contact Resistance —
Before Life — 50 milliohms max. (measured at 10 mA @ 6 Vdc)
After Life — 100 milliohms max. (measured @ 2 A @ 28 Vdc)

Mechanical Life Expectancy — 1 million operations min.

Coil Voltage — 6 to 26.5 Vdc

Coil Power — 2.6 watts max. @ 25°C

Duty Cycle — Continuous

Pick-up Voltage — Approximately 50% of nominal coil voltage

Pick-up Sensitivity — 475 mW

Contact Ratings

Contact Load	Type	Operations Min.
2 A @ 28 Vdc	Resistive	100,000
0.3 A @ 115 Vac, 60 Hz & 400 Hz	Resistive	100,000
0.75 A @ 28 Vdc	Inductive (200mH)	100,000
0.1 A @ 28 Vdc	Intermediate	50,000
0.2 A @ 28 Vdc	Lamp	100,000
10 µA @ 50 mV	Low Level	1,000,000

Catalog 5-1773450-5
Revised 3-13

www.te.com

Dimensions are shown for reference purposes only. Specifications subject to change.

Dimensions are in millimeters unless otherwise specified.

USA: +1 800 522 6752
Asia Pacific: +86 0 400 820 6015
UK: +44 800 267 666

For additional support numbers please visit www.te.com

Four Pole, Electrically Held, 2 Amps and Less (Continued)

SR (Continued)

Operating Characteristics

Timing —
Operate Time — 5.0 ms max.
Release Time — 5.0 ms max.

Contact Bounce — 5 ms max

Dielectric Withstanding Voltage —
Between Open Contacts —
350 Vrms 60 Hz
Between Adjacent Contacts —
500 Vrms 60 Hz
Between Contacts & Coil —
500 Vrms 60 Hz

Insulation Resistance —
1,000 megohms min. @ 500 Vdc

Environmental Characteristics

Temperature Range —
-65°C to +125°C

Weight —
0.28 oz. (7.8 grms)

Vibration Resistance —
15 G's, 10 to 2,000 Hz

Shock Resistance —
100 G's, 6 ±1 ms

QPL Approval —
MIL-R-39016/40

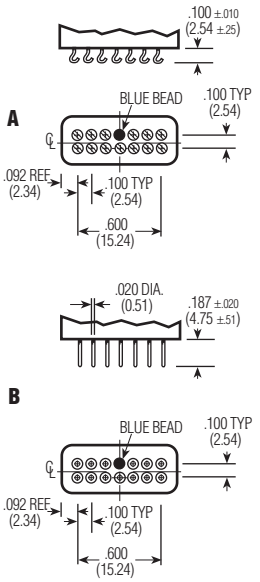

SR Terminals

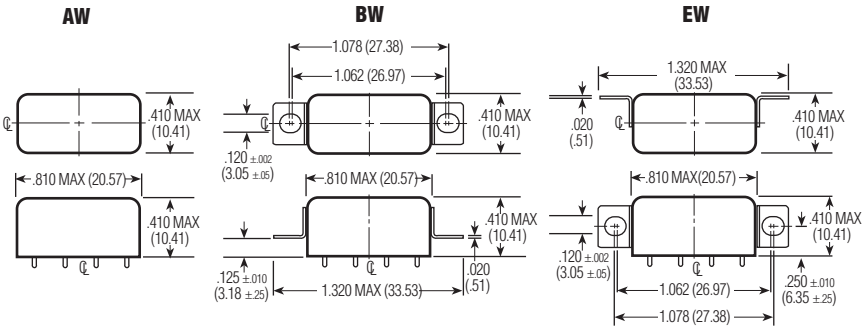

Mounting Styles

Standard Coil Data

Nom. Coil Voltage (Vdc)	Coil Resistance in Ohms ±10% @ 25°C	Pickup Voltage Vdc (Max.) @ 25°C	Pickup Voltage Vdc (Max.) @ 125°C	Drop-out Voltage Vdc (Min.) @ 25°C	Drop-out Voltage Vdc (Min.) @ -65°C	Nom. Coil Power (W) @ 25°C	Max. Coil Voltage	Coil Desig.
5.0	20	2.75	3.8	0.35	0.23	1.25	6.0	5
6.0	25	3.5	4.5	0.45	0.3	1.44	8.0	6
12.0	100	6.5	9.0	0.9	0.6	1.44	15.0	12
26.5	390	14.0	18.0	1.8	1.2	1.8	32.0	24

Specifying a Part Number Example:

Type	Mountings	Contacts	Coils	Terminals
SR	BW-	4C-	24	B

* The part number example shown on this page is for catalog items. For a list of specific QPL part numbers, please see the index in Section 15.

Catalog 5-1773450-5
Revised 3-13

www.te.com

Dimensions are shown for reference purposes only. Specifications subject to change.

Dimensions are in millimeters unless otherwise specified.

USA: +1 800 522 6752
Asia Pacific: +86 0 400 820 6015
UK: +44 800 267 666

For additional support numbers please visit www.te.com

Four Pole, Electrically Held, 2 Amps and Less (Continued)

.150 Grid-space Relays Type 3SBH (4PDT)

Product Facts

- **Low profile… only 0.32 inches high**
- **Long life version available**
- **Qualified to MIL-R-39016/14**

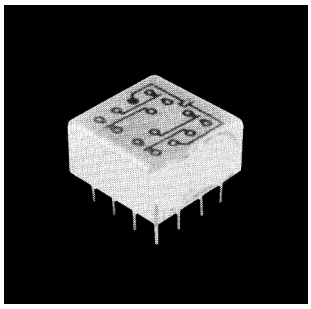

This .150 four pole double throw Grid-space relay is the companion to the two pole 3SBC type shown on page 1-41. It also features the same .150 inch pin spacing that allows you to insert the relay with no intermediate pin spreaders. There is adequate clearance for conductors to reach all pins. It is a very compact 4 pole double throw 2 ampere relay.

Electrical Characteristics

Contact Ratings —
DC resistive — 2 amps at 28 volts
DC inductive — 0.5 amps at 28 volts, 200 mH
AC resistive — 0.5 amps at 115 volts, 400 or 60 Hz (enclosure isolated from ground, or enclosure and movable contact at same potential)
AC — 0.125 amps at 115 volts (enclosure at line potential with respect to movable contact)
Low-level — low-level operation at 50 millivolts, 30 µA, 33 ohm miss level

Contact Resistance —
0.050 ohms max.;
0.150 ohms after life test

Life —
100,000 operations at rated loads listed;
1,000,000 operations at low-level loads

Operating Characteristics

Operate Time — 4 ms max.

Release Time — 4 ms max.

Contact Bounce — 1.5 ms

Dielectric Strength —
500 volts rms at sea level;
350 volts rms at 70,000 feet

Insulation Resistance —
1,000 megohms min. over temperature range

Environmental Characteristics

Vibration — 30 G, to 3,000 Hz

Shock — 100 G at 11 ms

Temperature — -65°C to +125°C

See page 1-57 for Mounting Forms, Terminals and Circuit Diagrams.

Coil Table (All Values DC)* Type 3SBH, 4 Pole Relay — 250 mW Sensitivity: (Code 1)

SENSITIVITY CODE: 1					
		Voltage Calibrated, Code: 5			
Coil Code Letter	Coil Resistance at 25C ohms	Suggested Source Volts†	Maximum Operate Volts at 25C	Release Voltage Range at 25C	
				Max.	Min.
B	28 ± 10%	4.0- 7.0	2.7	1.6	0.3
D	73 ± 10%	6.0-11.0	4.2	2.5	0.4
E	115 ± 10%	8.0-14.0	5.4	3.2	0.6
G	280 ± 10%	12 -22.0	8.4	5.0	0.8
H	430 ± 10%	15 -26.0	10.3	6.0	1.0
K	720 ± 10%	20 -35.0	13.5	8.1	1.5
N	1040 ± 10%	26 -46.0	17.5	10.5	1.9

*Values listed are factory test and inspection values. User should allow for meter variations.
†Applicable over the operating temperature range in circulating air.

Ordering Instructions

Catalog-selected Relays: The catalog number is derived by choosing the proper CODE for each of the six relay characteristics in the order in which the codes are listed.

Example: The relay selected in this example is a 4PDT .150-grid relay, voltage calibrated, end bracket mounting, 0.13 inch solder hook header, 720 ohms coil resistance, and 250 mW sensitivity. By choosing the proper code for each of these relay characteristics, the catalog number is identified as 3SBH5131K1. The letter R following sensitivity code indicates relay received 5000 operation miss-test. Ex. 3SBH5131K1R.

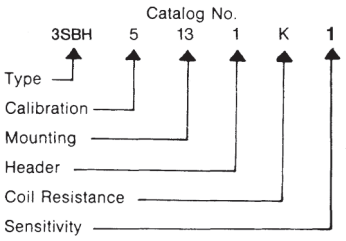

* The part number example shown on this page is for catalog items. For a list of specific QPL part numbers, please see the index in Section 15.

Catalog 5-1773450-5
Revised 3-13

www.te.com

Dimensions are shown for reference purposes only. Specifications subject to change.

Dimensions are in millimeters unless otherwise specified.

USA: +1 800 522 6752
Asia Pacific: +86 0 400 820 6015
UK: +44 800 267 666

For additional support numbers please visit www.te.com

Four Pole, Electrically Held, 2 Amps and Less (Continued)

.150 Grid-space Hybrid Relays

Type 3SBH (4PDT)

Product Facts

- **Low profile… only 0.32 inches high**
- **Long life version available**
- **Qualified to MIL-R-39016/53 & 54**

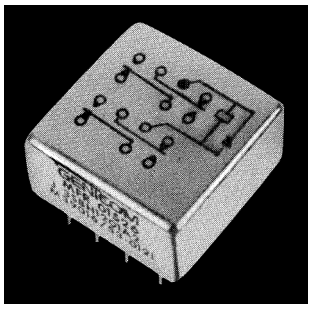

The 4PDT .150 Grid-space hybrid relays are advanced designs of the standard high reliability 4PDT .150 Grid-space relays. In the single diode version, the relay coil-back electromotive force is suppressed to prevent circuit/component damage. With the dual diode version, a steering diode is added to the coil circuit, along with the suppression diode. This steering diode prevents operation of the relay by reverse polarity voltages and protects the suppression diode. The single diode version is qualified to MIL-R-39016/53 and the dual diode is qualified to MIL-R-39016/54.

Electrical Characteristics

Contact Ratings —
DC resistive — 2 amps at 28 volts
DC inductive — 0.5 amps at 28 volts, 200 mH
AC resistive — 0.5 amps at 115 volts, 400 or 60 Hz (enclosure isolated from ground, or enclosure and movable contact at same potential)
AC — 0.125 amps at 115 volts (enclosure at line potential with respect to movable contact)
Low-level — 50 µA at 50mV

Contact Resistance —
0.050 ohms max.;
0.150 ohms after life test

Life — 100,000 operations at rated loads listed; 1,000,000 operations at low-level loads

Operating Characteristics

Operate Time — 4 ms max.

Release Time — 6 ms max.

Contact Bounce — 2.0 ms

Dielectric Strength (Note 1) —
500 volts rms at sea level;
350 volts rms at 70,000 feet

Insulation Resistance (Note 1) —
1,000 megohms min. over temperature range

Semiconductor Characteristics at 25°C

Max. Negative Transient — 1 volt

Breakdown Voltage —
100 Vdc @ 10 µA min.

Max. Leakage Current —
1 µA @ 50 Vdc

Note 1: Tests for dielectric withstanding voltage and insulation resistance should be made with "coil terminals" shorted together to avoid unnecessary electrical stress to semiconductor elements.

See page 1-57 for Mounting Forms, Terminals and Circuit Diagrams.

Coil Table (All Values DC)* Type 3SBH, 4 Pole Relay — 250 mW Sensitivity: (Code 5 single diode, Code 6 dual diodes)

Single Diode		SENSITIVITY CODE: 5			
		Voltage Calibrated, Code: 5			
Coil Code Letter	Coil Resistance at 25C ohms	Suggested Source Volts†	Maximum Operate Volts at 25C	Release Voltage Range at 25C	
				Max.	Min.
B	28 ± 10%	4.0- 7.0	2.7	1.6	0.3
D	73 ± 10%	6.0-11.0	4.2	2.5	0.4
E	115 ± 10%	8.0-14.0	5.4	3.2	0.6
G	280 ± 10%	12 -22.0	8.4	5.0	0.8
H	430 ± 10%	15 -26.0	10.3	6.0	1.0
K	720 ± 10%	20 -35.0	13.5	8.1	1.5
N	1040 ± 10%	26 -46.0	17.5	10.5	1.9
Dual Diode		**SENSITIVITY CODE: 6**			
B	28 ± 10%	4.0- 7.0	3.7	2.3	0.5
D	73 ± 10%	6.0-11.0	5.2	3.2	0.6
E	115 ± 10%	8.0-14.0	6.4	3.9	0.8
G	280 ± 10%	12.0-22.0	9.4	5.7	1.0
H	430 ± 10%	15 -26.0	11.3	6.7	1.2
K	720 ± 10%	20 -35.0	14.5	8.8	1.7
N	1040 ± 10%	26 -46.0	18.1	11.1	2.1

*Values listed are factory test and inspection values. User should allow for meter variations.
†Applicable over the operating temperature range in circulating air.

Catalog 5-1773450-5
Revised 3-13

www.te.com

Dimensions are shown for reference purposes only. Specifications subject to change.

Dimensions are in millimeters unless otherwise specified.

USA: +1 800 522 6752
Asia Pacific: +86 0 400 820 6015
UK: +44 800 267 666

For additional support numbers please visit www.te.com

Four Pole, Electrically Held, 2 Amps and Less (Continued)

Mounting Forms (3SBH)

(Vibration note with each form is acceleration from 55 to 3000 Hz)

No Mount

Mounting Code	Vibration*
00	30g

*Assumes relay held securely by potting or other means.

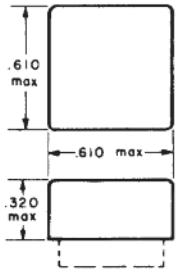

End Bracket

Mounting Code	Vibration
13	30g

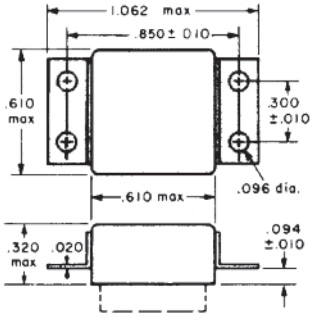

Header Types

Type	Z Dimension	Header Code
Solder hook	0.13	1
Straight pin	0.12	8
Straight pin socket or PCB type)	0.19	4
Straight pin	0.25	5

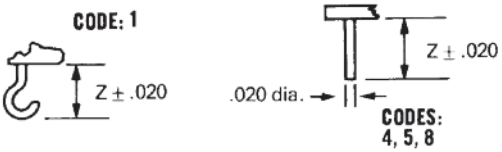

All dimensions in inches

TOLERANCES (Unless otherwise specified)	
Hundredths	±0.020
Thousandths	±0.005

Header and Connection Diagrams

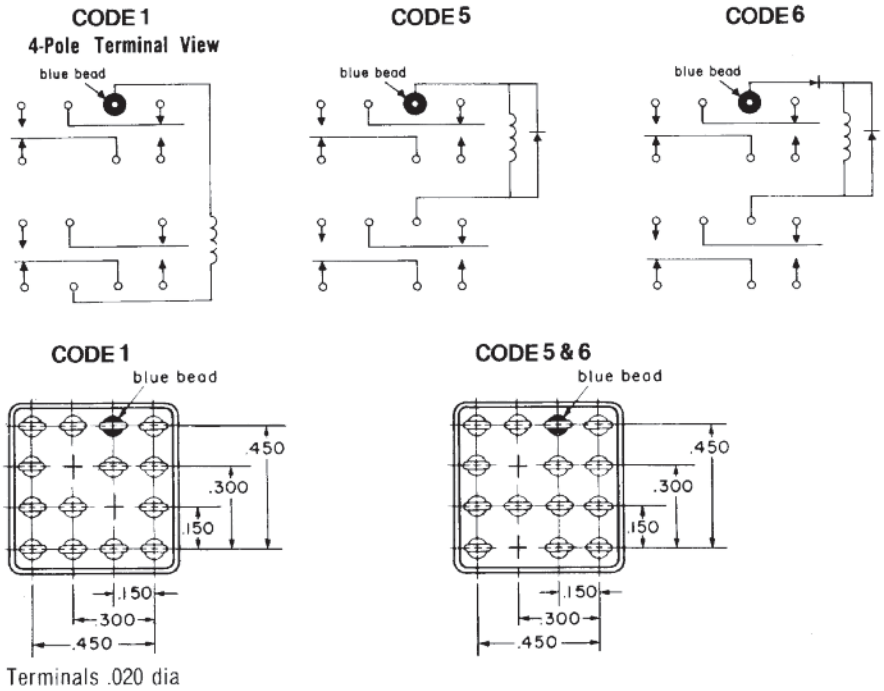

Ordering Instructions

Catalog-selected Relays: The catalog number is derived by choosing the proper CODE for each of the six relay characteristics in the order in which the codes are listed.

Example: The relay selected in this example is a 4PDT .150-grid relay, voltage calibrated, end bracket mounting, 0.13 inch solder hook header, 720 ohms coil resistance, and 250 mW sensitivity. By choosing the proper code for each of these relay characteristics, the catalog number is identified as 3SBH5131K5. The letter R following sensitivity code indicates relay received 5000 operation miss-test. Ex. 3SBH5131K5R.

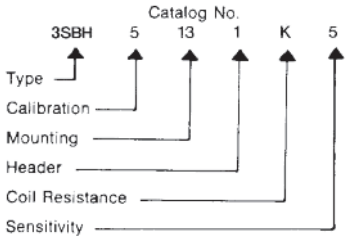

* The part number example shown on this page is for catalog items. For a list of specific QPL part numbers, please see the index in Section 15.

Catalog 5-1773450-5
Revised 3-13

www.te.com

Dimensions are shown for reference purposes only. Specifications subject to change.

Dimensions are in millimeters unless otherwise specified.

USA: +1 800 522 6752
Asia Pacific: +86 0 400 820 6015
UK: +44 800 267 666

For additional support numbers please visit www.te.com

Four Pole, Electrically Held, 2 Amps and Less (Continued)

Long-life .150 Grid-space Relays

100,000,000 Operations At Low Levels

Type 3SDH (4PDT)

Product Facts

- **Long life at low level or signal loads**
- **Low profile… only 0.32 inches high**

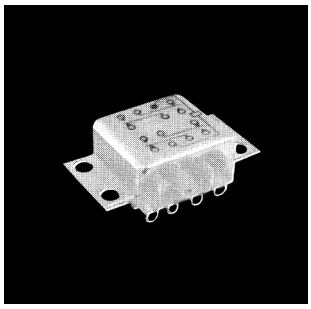

The 3SDH relay is designed for 100,000,000 operations at low levels. It is a four pole double throw Grid-space relay. The 0.150 inch pin spacing allows the user to insert the relay with no intermediate pin spreaders. There is adequate clearance for conductor to reach all pins.

Electrical Characteristics

Contact Ratings —
DC resistive — 2 amps at 28 volts, (DC 100,000 operations)
DC inductive — 0.3 amp at 28 volts, (L/R not greater than 0.008)
AC resistive — 0.5 amp at 115 volts, 400 or 60 Hz (enclosure isolated from ground, or enclosure and movable contact at same potential)
AC resistive — 0.125 amp at 115 volts (enclosure at line potential with respect to movable contact)
Low-level — 50 µA at 50 mV Peak AC or DC

Contact Resistance —
0.050 ohms max.;
0.150 ohms after life test

Life — 100,000 operations at rated loads listed; 100,000,000 operations at low-level loads

Operating Characteristics

Operate Time @ +25°C —
4 ms max.

Release Time @ +25°C —
4 ms max.

Contact Bounce @ +25°C — 1.5 ms

Dielectric Strength —
500 volts rms at sea level;
350 volts rms at 70,000 feet

Insulation Resistance —
1,000 megohms min. over temperature range

Environmental Characteristics

Vibration — 30 G, to 3,000 Hz

Shock — 100 G at 11 ms

Temperature — -40°C to +125°C

See page 1-59 for Mounting Forms, Terminals and Circuit Diagrams.

Coil Table (All Values DC)*Type 3SDH, 4 Pole Relay—210mW Sensitivity: (Code 1)

SENSITIVITY CODE: 1					
		Voltage Calibrated, Code: 5			
Coil Code Letter	Coil Resistance at 25C ohms	Suggested Source Volts†	Maximum Operate Volts at 25C	Release Voltage Range at 25C	
				Max.	Min.
B	28 ± 10%	4.0- 7.0	3.0	1.6	0.3
D	73 ± 10%	6.0-11.0	4.8	2.5	0.4
E	115 ± 10%	8.0-14.0	5.9	3.2	0.6
G	280 ± 10%	12 -22.0	9.3	5.0	0.8
H	430 ± 10%	15 -26.0	11.5	6.0	1.0
K	720 ± 10%	20 -35.0	14.9	8.1	1.5
N	1040 ± 10%	26 -46.0	17.9	10.5	1.9

*Values listed are factory test and inspection values. User should allow for meter variations.
†Applicable over the operating temperature range in circulating air.

Catalog 5-1773450-5
Revised 3-13

www.te.com

Dimensions are shown for reference purposes only. Specifications subject to change.

Dimensions are in millimeters unless otherwise specified.

USA: +1 800 522 6752
Asia Pacific: +86 0 400 820 6015
UK: +44 800 267 666

For additional support numbers please visit www.te.com

Four Pole, Electrically Held, 2 Amps and Less (Continued)

Mounting Forms (3SDH)

(Vibration note with each form is acceleration from 55 to 3000 Hz)

No Mount

Mounting Code	Vibration*
00	30g

*Assumes relay held securely by potting or other means.

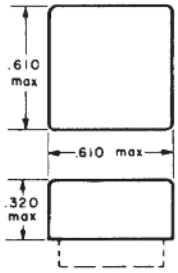

End Bracket

Mounting Code	Vibration
13	30g

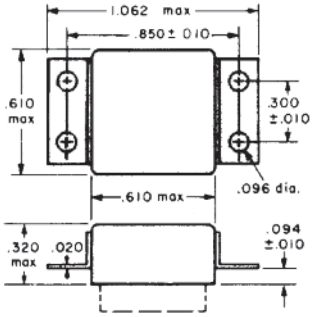

Header Types

Type	Z Dimension	Header Code
Solder hook	0.13	1
Straight pin	0.12	8
Straight pin socket or PCB type)	0.19	4
Straight pin	0.25	5

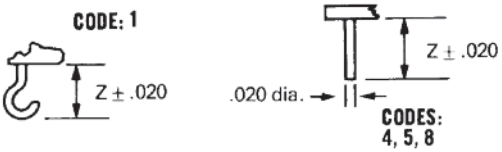

All dimensions in inches

TOLERANCES (Unless otherwise specified)	
Hundredths	±0.020
Thousandths	±0.005

Header and Connection Diagrams

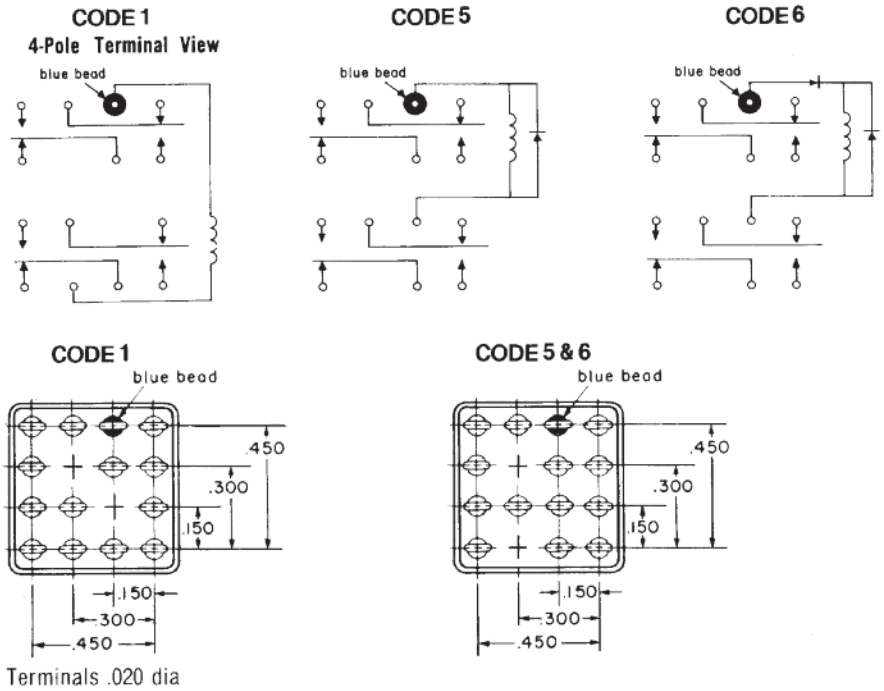

Ordering Instructions

Catalog-selected Relays: The catalog number is derived by choosing the proper CODE for each of the six relay characteristics in the order in which the codes are listed.

Example: The relay selected in this example is a 4PDT .150-grid relay, voltage calibrated, end bracket mounting, 0.13 inch solder hook header, 720 ohms coil resistance, and 210 mW sensitivity. By choosing the proper code for each of these relay characteristics, the catalog number is identified as 3SDH5131K1. The letter R following sensitivity code indicates relay received 5000 operation miss-test. Ex. 3SDH5131K1R.

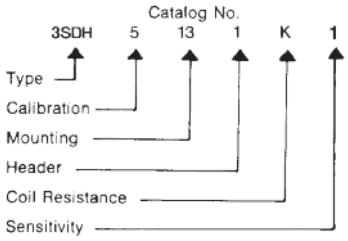

Catalog 5-1773450-5
Revised 3-13

www.te.com

Dimensions are shown for reference purposes only. Specifications subject to change.

Dimensions are in millimeters unless otherwise specified.

USA: +1 800 522 6752
Asia Pacific: +86 0 400 820 6015
UK: +44 800 267 666

For additional support numbers please visit www.te.com

Four Pole, Magnetic Latching, 2 Amps and Less

.150 Grid-space Magnetic Latching Relays

Type 3SBM (4PDT)

Product Facts

- **Low profile… only 0.32 inches high**
- **Internal diode for coil transient suppression available**
- **Qualified to MIL-R-39016/31**
- **Suitable for low pulse operation — 2 ms at rated voltage**

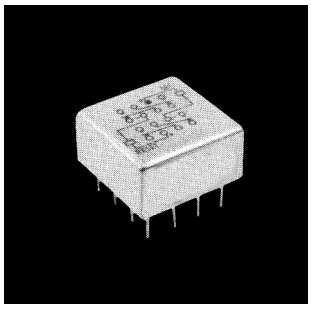

The Type 3SBM relay adds magnetic latching capability to the popular and growing family of .150-grid relays. This relay has memory in that the contact positions do not change when coil power is removed. Switching is accomplished by applying power to the applicable coil (dual coil) or with the applicable polarity (single coil). The low switching power requirements are further enhanced by its ability to operate from capacitor discharge or other pulses or through its own contacts from batteries or similarly limited supplies.

Electrical Characteristics

Operate Sensitivity—
Single-coil form, 100 mW,
Dual-coil form, 180 mW

Contact Arrangement—
4-pole double-throw (4C)

Contact Ratings —
DC resistive — 2 amps at 28 volts
DC inductive — 0.5 amp at 28 volts, 200 mH
AC resistive — 0.5 amp at 115 volts (enclosure isolated from ground, or enclosure and movable contact at same potential)
AC — 0.125 amp at 115 volts (enclosure at line potential with respect to movable contact)
Low-level — 50 µA at 50 mV Peak AC or DC

Contact Resistance —
0.050 ohms max.;
0.150 ohms after life tests

Life —
100,000 operations at rated loads listed;
1,000,000 operations at low-level loads

Operating Characteristics

Operate Time — 4 ms max.

Release Time — 4 ms max.

Contact Bounce — 1.5 ms

Dielectric Strength —
500 volts rms at sea level;
350 volts rms at 70,000 feet and above

Insulation Resistance —
1,000 megohms min. over temperature range

Environmental Characteristics

Vibration — 30 G, 55 to 3,000 Hz

Shock — 150 G at 11 ms

Temperature — -65°C to +125°C

See page 1-62 for Mounting Forms, Terminals and Circuit Diagrams.

Coil Table (All Values DC)*

Coil Code Letter	SINGLE COIL, SENSITIVITY 1, (100 mW)			
	Coil Resistance @ 25C (Ohms) ± 10%	Maximum Set-Reset Values		Suggested Source Volts‡
		Calibration Code 5 Voltage (Volts)	Calibration Code 6 Current (mA)	
N	57	2.4	42	3.6– 8.5
R	256	5.1	20	7.6–18
T	830	9.1	11	14–32
V	1700	13.0	7.7	20–46
W	3250	18.0	5.5	28–63

Coil Code Letter	DUAL COIL, SENSITIVITY CODE 2, (180 mW)			
	Coil Resistance @ 25C (Ohms) ± 10%	Maximum Set-Reset Values		Suggested Source Volts‡
		Calibration Code 5 Voltage (Volts)	Calibration Code 6 Current (mA)	
H	10	1.4	135	2.0– 3.7
N	37	2.6	70	3.8– 7.2
R	145	5.2	35	7.6–14.5
T	450	9.0	20	14–25
V	975	13.5	13.5	20–35
W	2140	20.0	9.2	30–54

*Values listed are factory test and inspection values. User should allow for meter variations.
†Applicable over the operating temperature range in circulating air.

Ordering Instructions

Type 3SBM relays can be ordered by specifying the correct catalog number. This number is derived by choosing the proper CODE for each of the six relay characteristics in the order in which the codes are listed.

Example: The relay selected in this example is a dual coil, current calibrated, four-hole end bracket mounting, solder hook header, 37 ohms coil resistance, and 180 mW sensitivity. By choosing the proper code for each of these relay characteristics, the catalog number is identified as 3SBM6131N2. The letter R following sensitivity code indicates relay received 5000 operation miss-test. Ex. 3SBM6131N2R.

Relay Characteristic Catalog No.

3SBM 6 13 1 N 2

Type
Calibration
Mounting
Header
Coil Resistance
Sensitivity

* The part number example shown on this page is for catalog items. For a list of specific QPL part numbers, please see the index in Section 15.

Catalog 5-1773450-5
Revised 3-13

www.te.com

Dimensions are shown for reference purposes only. Specifications subject to change.

Dimensions are in millimeters unless otherwise specified.

USA: +1 800 522 6752
Asia Pacific: +86 0 400 820 6015
UK: +44 800 267 666

For additional support numbers please visit www.te.com

Four Pole, Magnetic Latching, 2 Amps and Less (Continued)

.150 Grid-space Hybrid Magnetic Latching Relays

Single Diode, Dual Diode

Type 3SBM (4PDT)

Product Facts

- **Low profile… only 0.32 inches high**
- **Suitable for pulse operation**
- **Qualified to MIL-R-39016/35**
- **Qualified to MIL-R-39016/36**

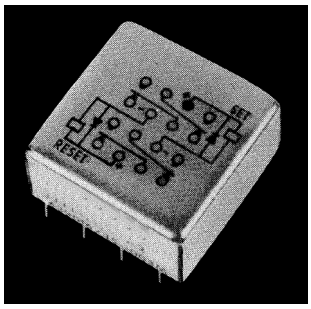

The dual coil version of the 3SBM magnetic latching relay is now available with coil transient suppression with or without blocking diodes for reverse polarity protection. This hybrid magnetic latching relay is an addition to the growing family of .150 grid relays. The diode method is employed to limit the back EMF generated when the coil circuit is opened in order to protect other circuit components such as semi-conductors. The contact load capabilities of the 3SBM as well as the memory feature of the latching function are both maintained.

Electrical Characteristics

Contact Arrangement—
4-pole double-throw (4C)

Operate Sensitivity—
Single-coil form, 100 mW,
Dual-coil form, 180 mW per coil

Contact Ratings —
DC resistive — 2 amps at 28 volts
DC inductive — 0.5 amp at 28 volts, 200 mH
AC resistive — 0.5 amp at 115 volts (enclosure isolated from ground, or enclosure and movable contact at same potential)
AC — 0.125 amp at 115 volts (enclosure at line potential with respect to movable contact)
Low-level — 50 µA at 50 mV Peak AC or DC

Contact Resistance —
0.050 ohms max.;
0.150 ohms after life test

Life — 100,000 operations at rated loads listed; 1,000,000 operations at low-level loads

Operating Characteristics

Operate Time — 4 ms max.

Release Time — 4 ms max.

Contact Bounce — 1.5 ms

Dielectric Strength (Note 1) —
500 volts rms at sea level;
350 volts rms at 70,000 feet and above

Insulation Resistance (Note 1) —
1,000 megohms min. over temperature range

Environmental Characteristics

Vibration — 30 G, 55 to 3,000 Hz

Shock — 150 G at 11 ms

Temperature — -65°C to +125°C

Semiconductor Characteristics at 25°C

Max. Negative Transient — 1 volt

Breakdown Voltage — 100 Vdc min.

Max. Leakage Current —
1 µA @ 50 Vdc

Note 1: Tests for dielectric withstanding voltage and insulation resistance should be made with "coil terminals" shorted together to avoid unnecessary electrical stress to semiconductor elements.

See page 1-62 for Mounting Forms, Terminals and Circuit Diagrams.

Coil Table Single Diode (All Values DC)*

Coil Code Letter	Dual Coil, Sensitivity Code 5 (180 mW)			
	Coil Resistance @ 25C (ohms) ± 10%	MAX. SET—RESET VALUES		Suggested Source Volts†
		Calibration Code 5 Voltage (Volts)	Calibration Code 6 Current (mA)	
H	10	1.4	135	2.0- 3.7
N	37	2.6	70	3.8- 7.2
R	145	5.2	35	7.6-14.5
T	450	9.0	20	14-25
V	975	13.5	3.5	20-35
W	2140	20.0	9.2	30-54

Coil Table Dual Diode (All Values DC)*

Coil Code Letter	Dual Coil, Sensitivity Code 6 (180 mW)			
	Coil Resistance @ 25C (ohms) ± 10%**	MAX. SET—RESET VALUES		Suggested Source Volts†
		Calibration Code 5 Voltage (Volts)	Calibration Code 6 Current (mA)	
H	10	2.4	135	2.6- 4.1
N	37	3.6	70	3.8- 7.2
R	145	6.2	35	7.6-14.5
T	450	10.0	20	14.0-25.0
V	975	14.5	13.5	20.0-35.0
W	2140	21.0	9.2	30.0-45.0

*Values listed are factory test and inspection values. User should allow for meter variations.
†Applicable over the operating temperature range in circulating air.
**Coil resistance cannot be measured by conventional bridge.

Note: See page 1-60 for ordering instructions.

* The part number example shown on this page is for catalog items. For a list of specific QPL part numbers, please see the index in Section 15.

Four Pole, Magnetic Latching, 2 Amps and Less (Continued)

Mounting Forms (3SBM)

(Vibration note with each form is acceleration from 55 to 3000 Hz)

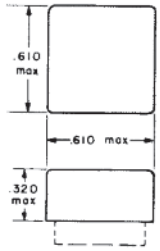

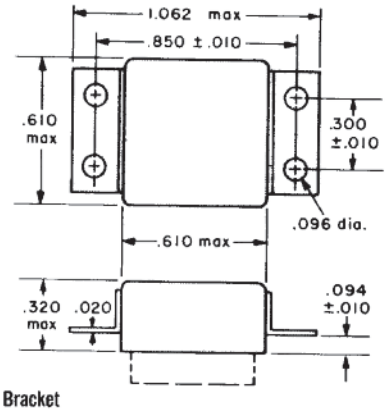

ALL DIMENSIONS IN INCHES

TOLERANCES Unless otherwise specified:	
Hundredths	±0.020
Thousandths	±0.005

No Mount

Mounting Code	Vibration*
00	30g

*Assumes relay held securely by potting or other means.

End Bracket

Mounting Code	Vibration
13	30g

Header and Connection Diagrams

Dual Coil

When the SET coil is pulsed with plus polarity on the blue bead, the movable contacts take the position shown in the connection diagram. The contacts are transferred when the RESET coil is pulsed with plus polarity on the reset terminal. A new pulse of the SET coil with plus polarity on the blue bead will transfer the contacts back.

The contacts can also be transferred by applying a pulse of opposite polarity to the coil previously pulsed. However, this method requires slightly more power than the more normal form of operation described in the previous paragraph.

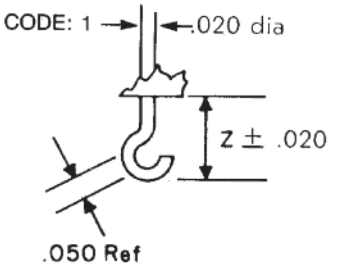

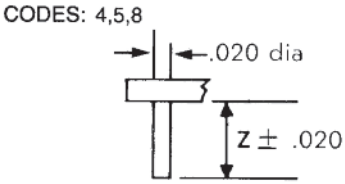

Header Types

Type	Z Dimension	Header Code
Solder Hook	0.13	1
Straight Pin	0.12	8
Straight Pin (socket or PCB type)	0.19	4
Straight Pin	0.25	5

CODE 1

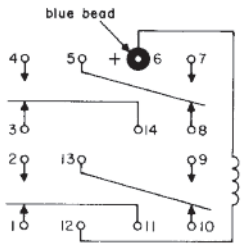

(Terminal numbers for reference only)

CODE 2

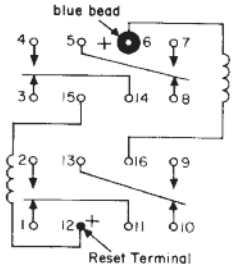

Terminal numbers for reference only

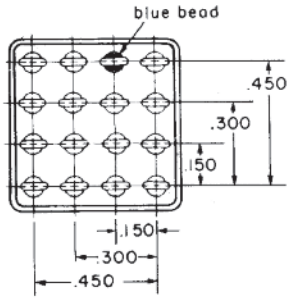

CODE 5
Single Diode

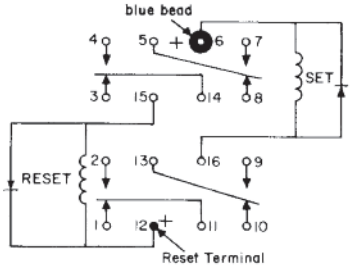

CODE 6
Dual Diode

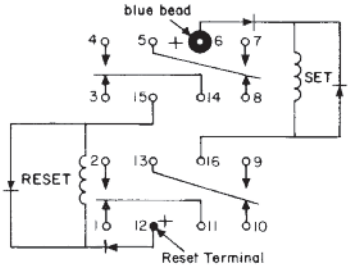

Catalog 5-1773450-5
Revised 3-13

www.te.com

Dimensions are shown for reference purposes only. Specifications subject to change.

Dimensions are in millimeters unless otherwise specified.

USA: +1 800 522 6752
Asia Pacific: +86 0 400 820 6015
UK: +44 800 267 666

For additional support numbers please visit www.te.com

Six Pole, Electrically Held, 2 Amps and Less

SS

SS

Six Pole Half Size High Performance Relay

Designed to MIL-R-39016

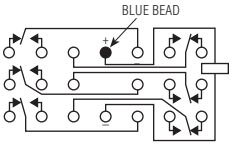

Terminal View

Product Facts

- **Hermetically sealed**
- **Up to 2 amps switching**
- **High shock & vibration ratings**
- **Optional terminals & mounting styles**
- **6 form C Hi-density design**

Electrical Characteristics

Contact Arrangement — 6 Form C (6PDT)

Contact Material —
Stationary —
Gold plated hardened silver alloy
Moveable —
Gold plated hardened silver alloy

Contact Resistance —
Before Life — 50 milliohms max. (measured at 10 mA @ 6 Vdc)
After Life — 100 milliohms max. (measured @ 2 A @ 28 Vdc)

Mechanical Life Expectancy — 1 million operations min.

Coil Voltage — 5 to 26.5 Vdc

Coil Power — 2.6 watts max. @ 25°C

Duty Cycle — Continuous

Pick-up Voltage — Approximately 50% of nominal coil voltage

Pick-up Sensitivity — 475 mW

Contact Ratings

Contact Load	Type	Operations Min.
2 A @ 28 Vdc	Resistive	100,000
0.3 A @ 115 Vac, 60 Hz & 400 Hz	Resistive	100,000
0.75 A @ 28 Vdc	Inductive (200mH)	100,000
0.1 A @ 28 Vdc	Intermediate	50,000
0.2 A @ 28 Vdc	Lamp	100,000
10 µA @ 50 mV	Low Level	1,000,000

Catalog 5-1773450-5
Revised 3-13

www.te.com

Dimensions are shown for reference purposes only. Specifications subject to change.

Dimensions are in millimeters unless otherwise specified.

USA: +1 800 522 6752
Asia Pacific: +86 0 400 820 6015
UK: +44 800 267 666

For additional support numbers please visit www.te.com

Six Pole, Electrically Held, 2 Amps and Less (Continued)

SS (Continued)

Operating Characteristics

Timing —
Operate Time — 5.0 ms max.
Release Time — 5.0 ms max.

Contact Bounce — 5.0 ms max

Dielectric Withstanding Voltage —
Between Open Contacts —
350 Vrms 60 Hz
Between Adjacent Contacts —
500 Vrms 60 Hz
Between Contacts & Coil —
500 Vrms 60 Hz

Insulation Resistance —
1,000 megohms min. @ 500 Vdc

Environmental Characteristics

Temperature Range —
-65°C to +125°C

Weight —
0.28 oz. (7.8 grms)

Vibration Resistance —
15 G's, 10 to 2,000 Hz

Shock Resistance —
100 G's, 6 ±1 ms

QPL Equivalent —
MIL-R-39016

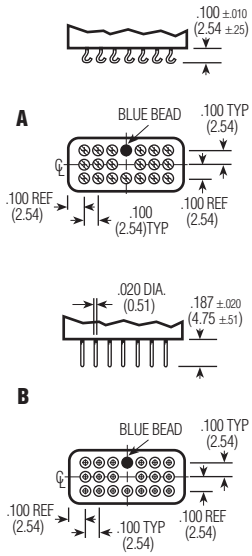

SS Terminals

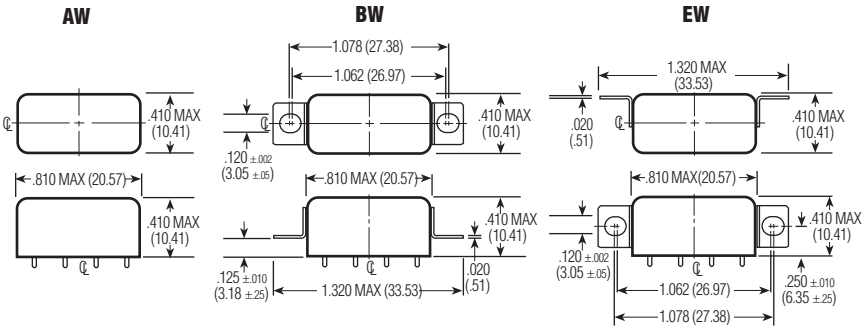

Mounting Styles

Standard Coil Data

Nom. Coil Voltage (Vdc)	Coil Resistance in Ohms ±10% @ 25°C	Pickup Voltage Vdc (Max.) @ 25°C	Pickup Voltage Vdc (Max.) @ 125°C	Drop-out Voltage Vdc (Min.) @ 25°C	Drop-out Voltage Vdc (Min.) @ -65°C	Nom. Coil Power (W) @ 25°C	Max. Coil Voltage	Coil Desig.
5.0	20	2.75	3.8	0.35	0.23	1.25	6.0	5
6.0	25	3.5	4.5	0.45	0.3	1.44	8.0	6
12.0	100	6.5	9.0	0.9	0.6	1.44	15.0	12
26.5	390	14.0	18.0	1.8	1.2	1.8	32.0	24

Specifying a Part Number Example:

Type	Mountings	Contacts	Coils	Terminals
SS	BW-	6C-	24	B

Catalog 5-1773450-5
Revised 3-13

www.te.com

Dimensions are shown for reference purposes only. Specifications subject to change.

Dimensions are in millimeters unless otherwise specified.

USA: +1 800 522 6752
Asia Pacific: +86 0 400 820 6015
UK: +44 800 267 666

For additional support numbers please visit www.te.com

Double Pole, Electrically Held, 5 Amps and Less

HFW4A, HFW5A

HFW4A, HFW5A

Standard Half Size High Performance Relay

Designed to MIL-R-39016/6

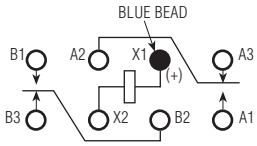

Terminal View

Product Facts

- **Hermetically sealed**
- **Up to 5 amps switching**
- **High shock & vibration ratings**
- **Optional terminals & mounting styles**
- **Excellent RF switching**

Electrical Characteristics

Contact Arrangement — 2 Form C (DPDT)

Contact Material —
Stationary —
Hardened silver alloy
Moveable —
Gold plated hardened silver alloy

Contact Resistance —
Before Life — 50 milliohms max. (measured at 10 mA @ 6 Vdc)
After Life — 100 milliohms max. (measured @ 2 A @ 28 Vdc)

Mechanical Life Expectancy — 50 million operations

Coil Voltage —
5 to 48 Vdc (HFW4A)
5 to 26.5 Vdc (HFW5A)

Coil Power — 1.4 watts max. @ 25°C

Duty Cycle — Continuous

Pick-up Voltage — Approximately 50% of nominal coil voltage

Pick-up Sensitivity @ 25°C — 145 to 260 mW

Contact Ratings

Contact Load	Type	Operations Min.
4 A @ 28 Vdc (HFW4A)	Resistive	100,000
5 A @ 28 Vdc (HFW5A)	Resistive	100,000
0.75 A @ 28 Vdc	Inductive (200mH)	100,000
0.1 A @ 115 Vac, 60 Hz & 400 Hz	Resistive	100,000
0.3 A @ 115 Vac, 60 Hz & 400 Hz	Resistive	100,000
0.1 A @ 28 Vdc	Intermediate	50,000
0.160 A @ 28 Vdc	Lamp	100,000
30 µA @ 50 mVdc	Low Level	1,000,000

RF Performance

Frequency (MHz)	RF Losses (dB)	VSWR	Isolation (dB)
100	0.1	1.17:1	40
500	0.3	1.19:1	28
1000	0.4	1.19:1	23

Catalog 5-1773450-5
Revised 3-13

www.te.com

Dimensions are shown for reference purposes only. Specifications subject to change.

Dimensions are in millimeters unless otherwise specified.

USA: +1 800 522 6752
Asia Pacific: +86 0 400 820 6015
UK: +44 800 267 666

For additional support numbers please visit www.te.com

Double Pole, Electrically Held, 5 Amps and Less (Continued)

HFW4A, HFW5A (Continued)

Operating Characteristics

Timing —
Operate Time — 4.0 ms max.
Release Time — 4.0 ms max.

Contact Bounce — 2.0 ms max.

Dielectric Withstanding Voltage —
Between Open Contacts —
500 Vrms 60 Hz
Between Adjacent Contacts —
1000 Vrms 60 Hz
Between Contacts & Coil —
1000 Vrms 60 Hz

Insulation Resistance —
10,000 megohms min. @ 500 Vdc

Environmental Characteristics

Temperature Range —
-65°C to +125°C

Weight — 0.46 oz. (13 gms max.)

Vibration Resistance —
20 G's, 10 to 2,000 Hz

Shock Resistance —
100 G's, 6 ±1 ms

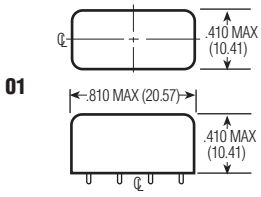

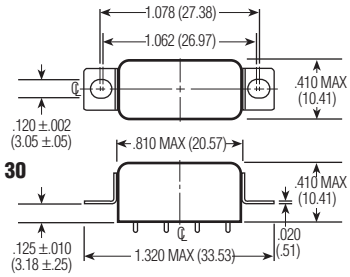

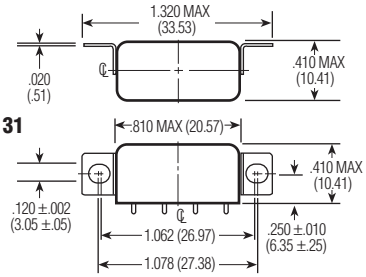

Mounting Styles

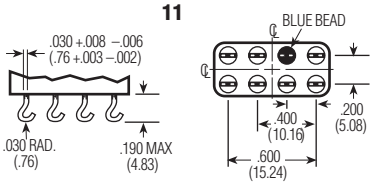

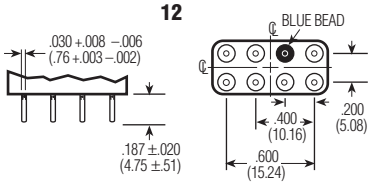

Terminals

Standard Coil Data

	Nom. Coil Voltage (Vdc)	Coil Resistance in Ohms ±10% @ 25°C	Pickup Voltage Vdc (Max.) @ 25°C	Pickup Voltage Vdc (Min.) @ 125°C	Drop-out Voltage Vdc (Min.) @ 25°C	Drop-out Voltage Vdc (Min.) @ -65°C	Nom. Coil Power (mW) @ 25°C	Max. Coil Voltage	Coil Desig.
HFW4A/HFW5A	5.0	27	2.7	3.8	0.29	0.21	926	6.0	L
	6.0	40	3.2	4.5	0.35	0.25	900	7.5	F
	12.0	160	6.4	9.0	0.7	0.5	900	15.0	G
	26.5	700	13.5	18.0	1.5	1.0	1003	32.0	K
Other	6-8	60	3.5	4.85	0.35	0.22	817	9.0	A
(avail. for	12-15	320	6.8	9.42	0.68	0.44	570	21.0	B
HFW4A	18.0	520	9.5	13.16	0.95	0.62	623	27.0	J
relays only)	26.5-32	1,250	14.0	19.4	1.5	0.98	684	42.0	D
	40.0	2,700	21.3	29.5	2.1	1.37	593	61.0	H
	48.0	3,500	25.5	35.3	2.5	1.63	658	70.0	E

Specifying a Part Number Example:

Type	Terminals	Mountings	Coils	Features
HFW5A	12	30	K	00

Catalog 5-1773450-5
Revised 3-13

www.te.com

Dimensions are shown for reference purposes only. Specifications subject to change.

Dimensions are in millimeters unless otherwise specified.

USA: +1 800 522 6752
Asia Pacific: +86 0 400 820 6015
UK: +44 800 267 666

For additional support numbers please visit www.te.com

Double Pole, Electrically Held, 5 Amps and Less (Continued)

HFC4A, HFC5A

Commercial/Industrial Half Size Relay

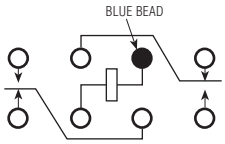

Terminal View

Product Facts

- **Hermetically sealed**
- **Up to 5 amps switching**
- **Economical configuration**
- **Optional terminals & mounting styles**

Electrical Characteristics

Contact Arrangement — 2 Form C (DPDT)

Contact Material —
Stationary —
Bifurcated hardened silver alloy
Moveable —
Gold plated hardened alloy

Contact Resistance —
Before Life — 50 milliohms max. (measured at 10 mA @ 6 Vdc)
After Life — 100 milliohms max. (measured @ 2 A @ 28 Vdc)

Mechanical Life Expectancy — 10 million operations

Coil Voltage — 5 to 26.5 Vdc

Coil Power — 1.4 watts max. @ 25°C

Duty Cycle — Continuous

Pick-up Voltage — Approximately 60% of nominal coil voltage

Pick-up Sensitivity — 360 mW

Operating Characteristics

Timing —
Operate Time — 6.0 ms max.
Release Time — 6.0 ms max.

Dielectric Withstanding Voltage —
Between Open Contacts — 350 Vrms 60 Hz
Between Adjacent Contacts — 500 Vrms 60 Hz
Between Contacts and Coil — 500 Vrms 60 Hz

Insulation Resistance — 1,000 megohms min @ 500 Vdc

Environmental Characteristics

Temperature Range — -55°C to +85°C

Weight — 0.46 oz. (13 gms) max.

Vibration Resistance — 10 G's, 10 to 500 Hz

Shock Resistance — 30 G's, 6 ±1 ms

Contact Ratings

	Contact Load	Type	Operations Min.
HFC4A	4 A @ 28 Vdc	Resistive	100,000
HFC5A	5 A @ 28 Vdc	Resistive	100,000
	0.75 A @ 28 Vdc	Inductive (200 mH)	100,000
	0.3 A @ 115 Vac, 60 Hz & 400 Hz	Resistive	100,000

Standard Coil Data

Nom. Coil Voltage (Vdc)	Coil Resistance in Ohms ± 20% @ 25°C	Pickup Voltage Vdc (Max.) @ 25°C	Pickup Voltage Vdc (Max.) @ 85°C	Nom. Coil Power (W) @ 25°C	Max. Coil Voltage	Coil Desig.
5.0	27	3.0	3.7	.92	6.0	L
6.0	40	3.6	4.5	.90	7.5	F
12.0	160	7.2	8.9	.90	15.0	G
26.5	700	16.0	19.7	1.00	32.0	K

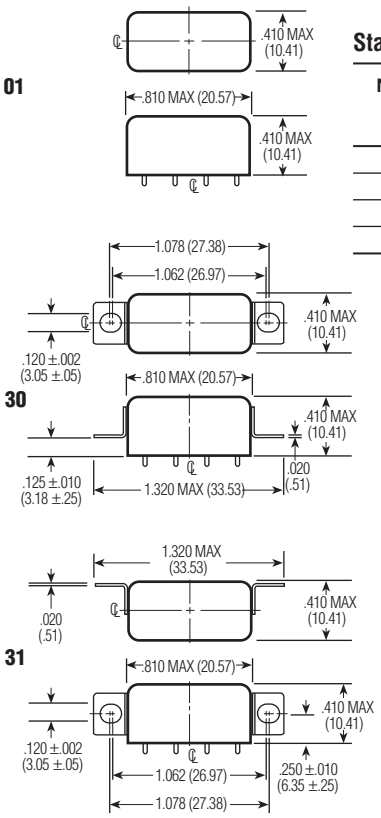

Mounting Styles

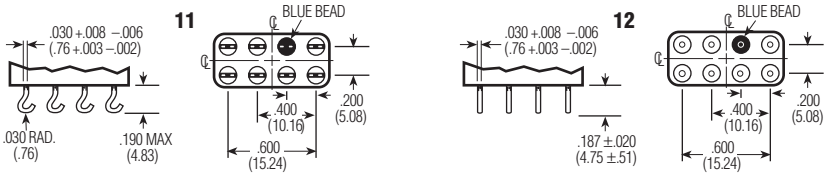

Terminals

Specifying a Part Number Example:

Type	Terminals	Mountings	Coils	Features
HFC5A	12	30	K	00

Catalog 5-1773450-5
Revised 3-13

www.te.com

Dimensions are shown for reference purposes only. Specifications subject to change.

Dimensions are in millimeters unless otherwise specified.

USA: +1 800 522 6752
Asia Pacific: +86 0 400 820 6015
UK: +44 800 267 666

For additional support numbers please visit www.te.com

Double Pole, Electrically Held, 5 Amps and Less (Continued)

FW, FW5A, SF, SF5A

Two Pole Full Size Crystal-Can Relay

FW Qualified to MIL-R-5757/10

FW SF

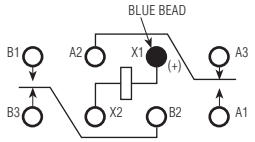

Terminal View

Product Facts

- Hermetically sealed
- Up to 5 amps switching
- High shock & vibration ratings
- Optional terminals & mounting options
- Excellent RF switching

Electrical Characteristics

Contact Arrangement —
2 Form C

Contact Material —
Stationary —
Bifurcated hardened silver alloy
Moveable —
Gold plated hardened alloy

Contact Resistance —
Before Life — 50 milliohms max.
(measured at 10 mA @ 6 Vdc)
After Life — 100 milliohms max.
(measured @ 2 mA @ 28 Vdc)

Mechanical Life Expectancy —
50 million operations

Coil Voltage —
6.3 to 110 Vdc (FW, FWSA)
1.8 to 40 Vdc (SF)
2.8 to 40 Vdc (SFSA)

Coil Power — 1.5 watts max. @ 25°C

Duty Cycle — Continuous

Pick-up Voltage — Approximately 50% of nominal coil voltage

Pick-up Sensitivity —
250 mW (FW, FWSA)
40 mW (SF)
80 mW (SF5A)

Operating Characteristics

Operate Time —
15 ms max. (SF)
5 ms (FW, FWSA))
6 ms max. (MIL-R-5757/10)

Release Time —
10 ms max. (SF)
5 ms max. (FW, FWSA)
6 ms max. (MIL-R-5757/10)

Contact Bounce — 2 ms max.

Dielectric Withstanding Voltage —
Between Open Contacts —
500 Vrms 60 Hz
Between Adjacent Contacts —
1,000 Vrms 60 Hz
Between Contacts and Coil —
1,000 Vrms 60 Hz

Insulation Resistance —
10,000 megohms min @ 500 Vdc

Environmental Characteristics

Temperature Range —
-65°C to +125°C

Weight —
0.6 oz. max. (FW, FWSA)
0.7 oz. max. (SF 6)
1.1 oz. max. (SF/SF 5A)

Vibration Resistance —
Standard —
20 G's, 10 to 2000 Hz (FW, FWSA)
15 G's, 10 to 2000 Hz (SF)
QPL —
20 G's, 10 to 2000 Hz

Shock Resistance —
100 G's, 6 ±1 ms

QPL Approval —
MIL-R-5757/10 (FW only)

QPL Equivalent —
MIL-R-5757/13 (SF only)

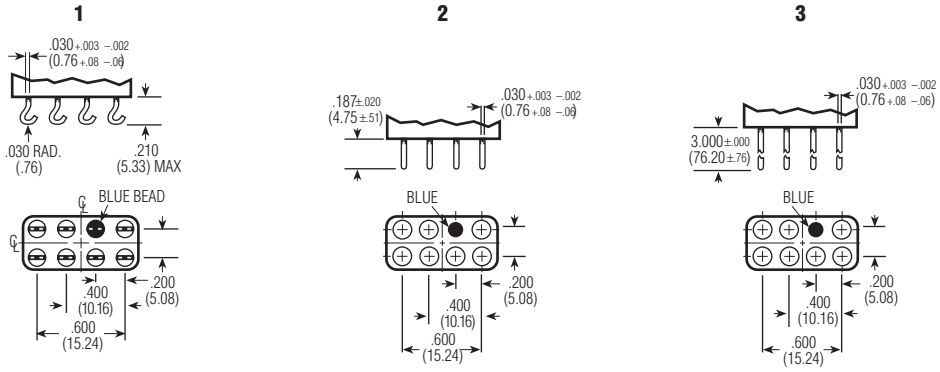

Terminals

RF Performance

Frequency (MHz)	RF Losses (dB)	VSWR	Isolation (dB)
100	0.1	1.17:1	40
250	0.2	1.18:1	33
500	0.3	1.19:1	28
750	0.4	1.19:1	25
1,000	0.4	1.19:1	23

Contact Ratings

Contact Load	Type	Operations Min.
5 A @ 28 Vdc (FW5A/SF5A)	Resistive	100,000
3 A @ 28 Vdc (FW)	Resistive	100,000
2 A @ 28 Vdc (SF)	Resistive	100,000
1 A @ 115 Vac, 60 Hz & 400 Hz (FW)	Resistive	100,000
0.3 A @ 115 Vac, 60 Hz & 400 Hz (SF)	Resistive	100,000
1 A @ 28 Vdc	Inductive (200 mH)	100,000
0.1 A @ 28 Vdc	Lamp	100,000
10 µA @ 50 mVdc	Low Level	1,000,000
75 WATTS @ 50 MHz (FW)	RF	10,000,000

Dimensions are shown for reference purposes only. Specifications subject to change.

Dimensions are in millimeters unless otherwise specified.

USA: +1 800 522 6752
Asia Pacific: +86 0 400 820 6015
UK: +44 800 267 666

For additional support numbers please visit www.te.com

Double Pole, Electrically Held, 5 Amps and Less (Continued)

FW, FW5A Coil Data

Nom. Coil Voltage (Vdc)	Coil Resistance in Ohms ±10% @ 25°C	Pickup Voltage Vdc (Max.) @ 25°C	Pickup Voltage Vdc (Max.) @ 125°C	Drop-out Voltage Vdc (Min.) @ 25°C	Drop-out Voltage Vdc (Min.) @ -65°C	Nom. Coil Power (W) @ 25°C	Max. Coil Voltage	Coil Desig.
6.3	35	3.2	4.4	0.35	0.23	1.13	7.9	A
12.6	200	6.8	9.4	0.74	0.49	.79	15.8	D
17.6	340	8.9	12.3	0.97	0.64	.91	22.0	E
26.5	675	13.5	18.7	1.47	0.96	1.04	33.1	G
32.0	975	15.5	21.5	1.69	1.1	1.05	40.0	H
48.0	2,450	25.0	34.7	2.73	1.8	.94	60.0	L
56.0	3,150	30.0	41.6	3.27	2.1	1.00	70.0	M
75.0	5,000	38.0	52.7	4.14	2.7	1.13	93.8	N
110.0	9,100	51.0	70.7	5.56	3.6	1.33	137.5	R

SF5/SF6 Coil Data

Nom. Coil Voltage (Vdc)	Nom. Current (mA)	Coil Resistance in Ohms ± 10% @ 25°C	Pickup Current (mA) @ 25°C	Nom. Coil Power (mW) @ 25°C	Coil Desig.
1.8	90.0	20	45.0	162	A
9.0	18.0	500	9.0	162	E
12.6	12.6	1,000	6.5	159	F
16.5	11.0	1,500	5.2	182	G
18.0	9.0	2,000	4.5	162	H
20.0	8.0	2,500	4.0	160	J
26.5	5.3	5,000	2.8	140	W
36.0	4.5	8,000	2.3	162	L
40.0	4.0	10,000	2.0	160	Y

SF5A Coil Data

Nom. Coil Voltage (Vdc)	Nom. Current (mA)	Coil Resistance in Ohms ± 10% @ 25°C	Pickup Current (mA) @ 25°C	Nom. Coil Power (mW) @ 25°C	Coil Desig.
2.8	140.0	20	65.0	392	A
4.0	80.0	50	41.6	320	B
12.0	24.0	500	12.5	288	E
18.0	18.0	1,000	9.3	324	F
26.5	10.6	2,500	5.6	281	J
40.0	8.0	5,000	4.0	320	W

NOTE:
FW/FW5A = .875 (22.23) Max.
SF6 = .900 (22.86) Max.
SF5/SF5A5 = 1.281 (32.54) Max.

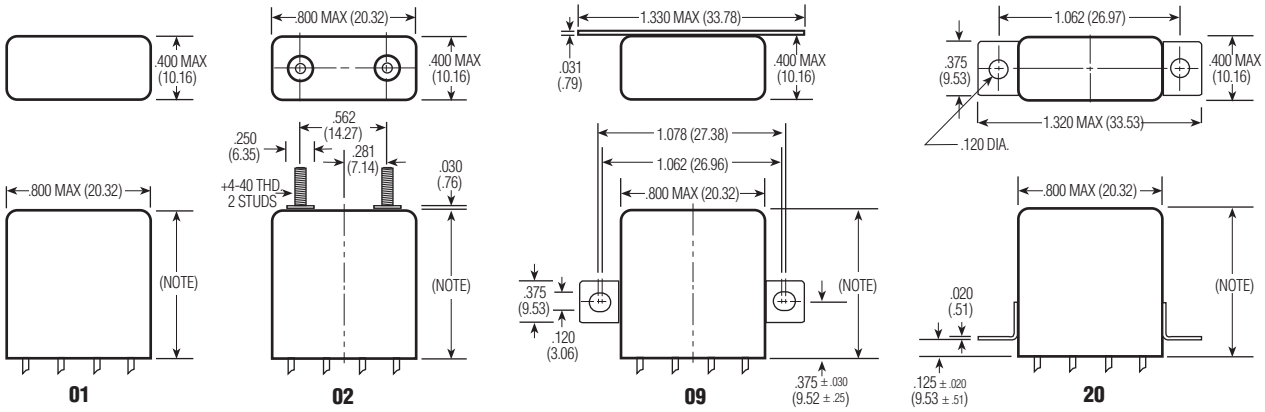

Mounting Styles

Specifying a Part Number Example:

Type	Series	Terminals	Mountings	Coils	Features
FW	1	1	20	G	00
SF	5	1	20	W	00
SF5A	5	1	20	W	00
SF	6	1	20	W	00

* The part number example shown on this page is for catalog items. For a list of specific QPL part numbers, please see the index in Section 15.

Catalog 5-1773450-5
Revised 3-13

www.te.com

Dimensions are shown for reference purposes only. Specifications subject to change.

Dimensions are in millimeters unless otherwise specified.

USA: +1 800 522 6752
Asia Pacific: +86 0 400 820 6015
UK: +44 800 267 666

For additional support numbers please visit www.te.com

Single Pole, Electrically Held, 10 Amps and Less

C

Single Pole, Half Size High Performance Relay

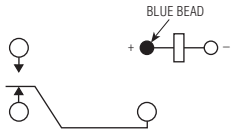

Terminal View

Product Facts

- **Hermetically sealed**
- **Up to 10 amps switching**
- **High shock & vibration ratings**
- **Optional terminals & mounting styles**

Electrical Characteristics

Contact Arrangement — 1 Form C (SPDT)

Contact Material —
Stationary — Hardened silver alloy
Moveable — Hardened silver alloy

Contact Resistance —
Before Life — 50 Milliohms max. (measured at 10 mA @ 6 Vdc)
After Life — 100 Milliohms max. (measured @ 1 A @28 Vdc)

Contact Rating —
Contact Load — 10 A 28 Vdc
Type — Resistive
Operations min. 50,000

Mechanical Life Expectancy — 1 million operations min.

Coil Voltage — 6 to 26.5 Vdc

Coil Power — 1.4 watts max. @ 25°C

Duty Cycle — Continuous

Pick-up Voltage — Approximately 50% of nominal coil voltage

Pick-up Sensitivity — 260 mW

Operational Characteristics

Operate Time — 5.0 ms max.

Release Time — 5.0 ms max.

Contact Bounce — 5.0 ms max.

Dielectric Withstanding Voltage —
Between Open Contacts — 500 Vrms 60 Hz
Between Adjacent Contacts — 1000 Vrms 60 Hz
Between Contacts and Coils — 1000 Vrms 60 Hz

Insulation Resistance — 1,000 megohms min. @ 500 Vdc

Environmental Characteristics

Temperature Range — -65°C to +125°C

Weight — 0.28 oz. (8 grams) max.

Vibration Resistance — 20 G's, 10 to 2,000 Hz

Shock Resistance — 100 G's, 6 ±1 ms

Designed To — MIL-R-39016

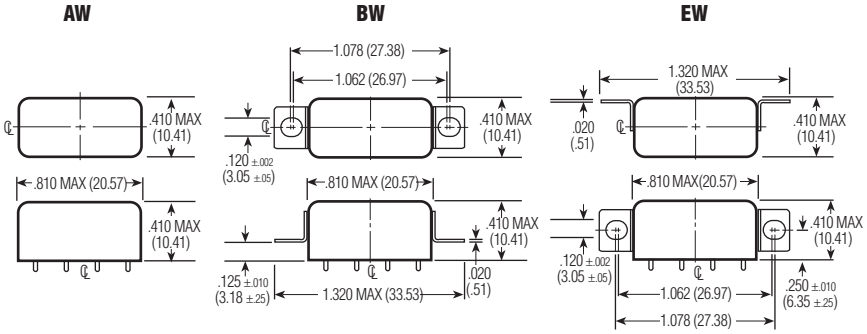

Mounting Styles

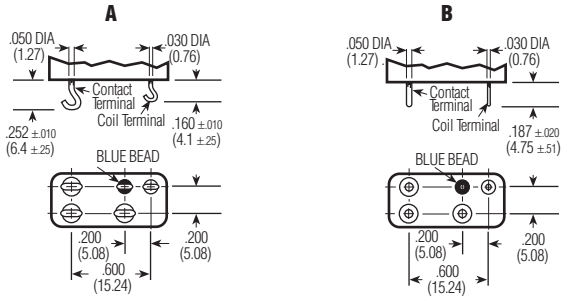

Terminals

Standard Coil Data

Nom. Coil Voltage (Vdc)	Coil Resistance in Ohms ±10% @ 25°C	Pickup Voltage Vdc (Max.) @ 25°C	Pickup Voltage Vdc (Max.) @ 125°C	Drop-out Voltage Vdc (Min.) @ 25°C	Drop-out Voltage Vdc (Min.) @ -65°C	Nom. Coil Power (W) @ 25°C	Max. Coil Voltage	Coil Desig.
6.0	40	3.5	4.5	0.45	0.3	.9	8.0	6
12.0	160	6.5	9.0	0.9	0.6	.9	15.0	12
26.5	700	14.0	18.0	1.8	1.2	1.0	32.0	24

Specifying a Part Number Example:

Type	Mountings	Contacts	Coils	Terminals
C	BW-	1C-	24	B

Catalog 5-1773450-5
Revised 3-13

www.te.com

Dimensions are shown for reference purposes only. Specifications subject to change.

Dimensions are in millimeters unless otherwise specified.

USA: +1 800 522 6752
Asia Pacific: +86 0 400 820 6015
UK: +44 800 267 666

For additional support numbers please visit www.te.com

Double Pole, Electrically Held, 10 Amps and Less

07

Two Pole 10 Amp High Performance Relay

Qualified to MIL-R-5757/23 MS 27245 & MS 27247

Product Facts

- **Hermetically sealed**
- **Up to 10 amps switching**
- **High shock & vibration ratings**
- **Optional terminals & mounting styles**
- **DC, AC & diode-suppressed coils**

Electrical Characteristics

Contact Arrangement — 2 Form C (DPDT)

Contact Material —
Stationary — Silver cadmium oxide
Moveable — Silver cadmium oxide

Contact Resistance —
Before Life — 10 milliohms max.
After life — 20 milliohms max.
(Measured at 10 A @ 28 Vdc)

Mechanical Life Expectancy — 1 million operations

Coil Voltage — 6 to 120 Vdc, 115 Vac

Coil Power — 4.3 watts max. @ 25°C

Duty Cycle — Continuous

Pick-up Voltage — Approximately 50% of nominal coil voltage

Pick-up Sensitivity — 565 mW

Operating Characteristics

Operate Time —
Std — 10 ms max.
QPL — 15 ms max.
AC Coil — 15 ms max.

Release Time —
Std — 10 ms max.
QPL — 15 ms max.
AC Coil — 20 ms max.

Contact Bounce —
Std — 5 ms max. (N.O. and N.C.)
QPL — 2 ms max. (N.O.)
QPL — 5 ms max. (N.C.)

Dielectric Withstanding Voltage —
Between Open Contacts — 500 Vrms 60 Hz
Between Adjacent Contacts — 1000 Vrms 60 Hz
Between Contacts and Coil — 1000 Vrms 60 Hz

Insulation Resistance — 1,000 megohms min. @ 500 Vdc

Environmental Characteristics

Temperature Range — -65°C TO +125°C

Weight — 1.3 oz (37 gms) max.

Vibration Resistance —
Standard — 30 G's, 10 to 2,000 Hz
QPL — 20 G's, 10 to 2,000 Hz

Shock Resistance — 100 G's, 6 ±1 ms

QPL Approval —
MIL-R-5757/23
MS 27245
MS 27247

Contact Ratings

Contact Load	Type	Operations Min.
10 A @ 28 Vdc	Resistive	100,000
3 A @ 115 V, 60 Hz	Resistive	50,000
5 A @ 115 V, 400 Hz	Resistive	50,000
6 A @ 28 Vdc	Inductive	50,000
2 A @ 115 V, 60 Hz	Inductive	50,000
2.5 A @ 115 V, 400 Hz	Inductive	50,000
1 A @ 28 Vdc	Lamp	50,000
0.5 A @ 115 V, 60 Hz	Lamp	50,000
0.8 A @ 115 V, 400 Hz	Lamp	50,000
3 A @ 28 Vdc	Motor	50,000
1.5 A @ 115 V, 60 Hz	Motor	50,000
3 A @ 115 V, 400 Hz	Motor	50,000

*All ratings grounded case

2

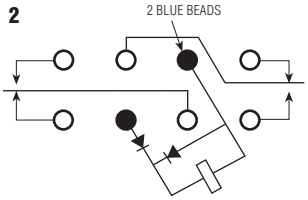

Terminal View

3

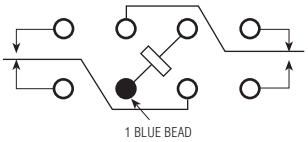

Terminal View

4

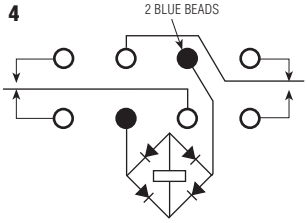

Terminal View

5

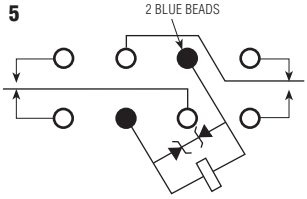

Terminal View

1: GOLD PLATED

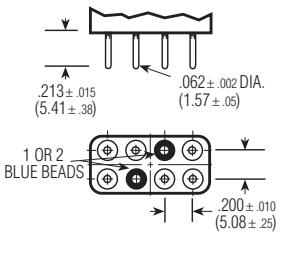

2: SOLDER FINISH

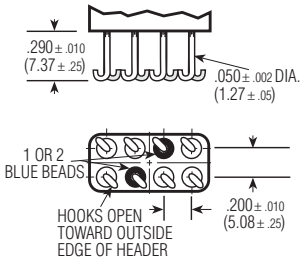

4: GOLD PLATED
5: SOLDER FINISH

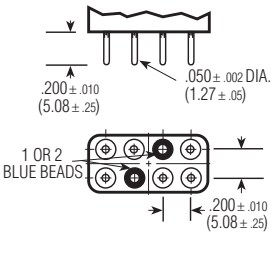

Terminals

Catalog 5-1773450-5
Revised 3-13

www.te.com

Dimensions are shown for reference purposes only. Specifications subject to change.

Dimensions are in millimeters unless otherwise specified.

USA: +1 800 522 6752
Asia Pacific: +86 0 400 820 6015
UK: +44 800 267 666

For additional support numbers please visit www.te.com

Double Pole, Electrically Held, 10 Amps and Less (Continued)

Coil Data

Nom. Coil Voltage (Vdc)	Coil Resistance in Ohms ±10% @ 25°C	Pickup Voltage Vdc (Max.) @ 25°C	Pickup Voltage Vdc (Max.) @ 125°C	Drop-out Voltage Vdc (Min.) @ 25°C	Drop-out Voltage Vdc (Min.) @ -65°C	Nom. Coil Power (mW) @ 25°C	Max. Coil Voltage	Coil Desig.	Environmental
6.0	19	3.6	4.5	0.4	0.25	1.89	9.0	AA	**Temperature** -55˚C to +85˚C
12.0	75	7.2	9.0	0.9	0.5	1.92	16.0	AB	
26.5	300	14.4	18.0	1.8	1.0	2.34	32.0	AC	**Vibration** 20G's, 10 to 2,000Hz
48.0	1,200	29.0	36.0	3.6	2.0	1.92	52.0	AD	
120.0	7,600	72.0	90.0	9.0	5.0	1.89	122.0	AE	**Shock** 50G's, 11ms
115 Vac 400 Hz	1,200	72.0	90.0	10.0	5.0	n/a	n/a	AR	
115 Vac 60-400 Hz	7,600	72.0	90.0	10.0	5.0	n/a	n/a	AS	
6.0	19	3.3	4.5	0.4	0.25	1.89	9.0	BA	**Temperature** -65˚C to +125˚C
12.0	75	6.5	9.0	0.9	0.5	1.92	16.0	BB	
26.5	300	13.0	18.0	1.8	1.0	2.34	32.0	BC	**Vibration** 20G's, 10 to 2,000Hz
48.0	1,200	26.0	36.0	3.6	2.0	1.92	52.0	BD	
120.0	7,600	66.0	90.0	9.0	5.0	1.89	122.0	BE	**Shock** 50G's, 11ms
115 Vac 400 Hz	1,200	75.0	90.0	10.0	5.0	n/a	n/a	BR	
115 Vac 60-400 Hz	7,600	75.0	90.0	10.0	5.0	n/a	n/a	BS	
6.0	19	3.7	5.0	0.4	0.25	1.89	9.0	CA	**Temperature** -65˚C to +125˚C
12.0	75	7.4	10.0	0.9	0.5	1.92	16.0	CB	
26.5	300	14.7	20.0	1.8	1.0	2.34	32.0	CC	**Vibration** 30G's, 10 to 2,000Hz
48.0	1,200	29.4	40.0	3.6	2.0	1.92	52.0	CD	
120.0	7,600	74.0	100.0	9.0	5.0	1.89	122.0	CE	**Shock** 100G's, 6ms
115 Vac 400 Hz	1,200	80.0	100.0	10.0	5.0	n/a	n/a	CR	
115 Vac 60-400 Hz	7,600	80.0	100.0	10.0	5.0	n/a	n/a	CS	

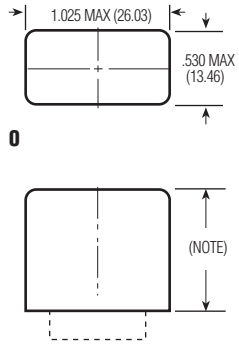

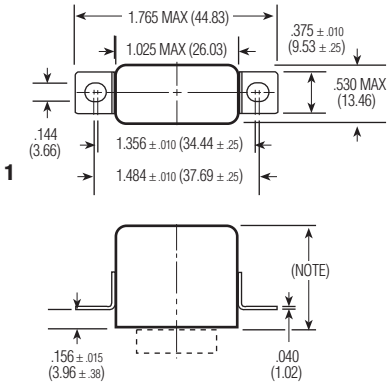

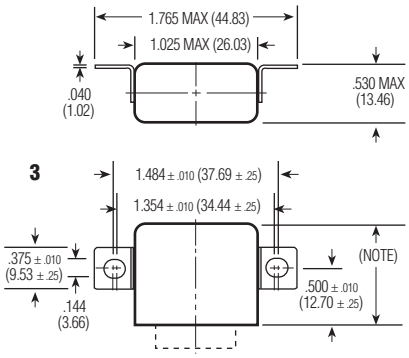

Note:
A07 = .895 max (22.73), Schematic 3 only
B07 = 1.010 max (25.66), Schematic 3 only
B07 = 1.234 max (31.35), Schematics 2, 4 & 5 only

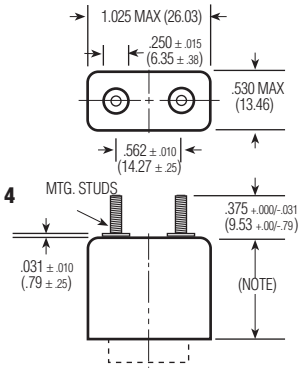

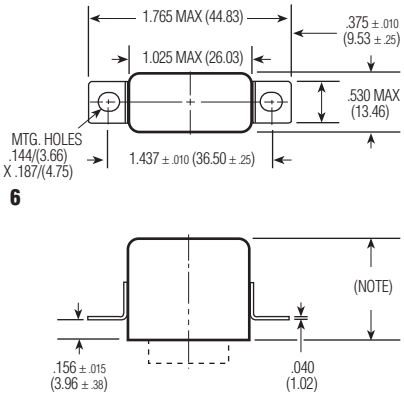

07 Mounting Styles

Specifying a Part Number Example:

Type	Ratings	Mountings	Schematic	Terminals	Coil	Testing
B07	B	3	3	2	BC	1

* The part number example shown on this page is for catalog items. For a list of specific QPL part numbers, please see the index in Section 15.

Catalog 5-1773450-5
Revised 3-13

www.te.com

Dimensions are shown for reference purposes only. Specifications subject to change.

Dimensions are in millimeters unless otherwise specified.

USA: +1 800 522 6752
Asia Pacific: +86 0 400 820 6015
UK: +44 800 267 666

For additional support numbers please visit www.te.com

Table of Contents

CII MW3 / MW4 / MW6 / MW3HP / MW4HP / MW6HP Series Relays
Double Pole, Electrically Held, 1 Amp and Less
Introduction 2-2
MW3 & MW3HP Models, 3 GHz Switching 2-3, 2-4
MW4 & MW4HP Models, 4 GHz Switching 2-5, 2-6
MW6 & MW6HP Models, 6 GHz Switching 2-7, 2-8

Catalog 5-1773450-5
Revised 3-13

www.te.com

Dimensions are shown for reference purposes only. Specifications subject to change.

Dimensions are in millimeters unless otherwise specified.

USA: +1 800 522 6752
Asia Pacific: +86 0 400 820 6015
UK: +44 800 267 666

For additional support numbers please visit www.te.com

Double Pole, Electrically Held, 1 Amp and Less

MW3 / MW4 / MW6 / MW3HP / MW4HP / MW6HP Series Relays

Microwave Switching, Hermetically Sealed, DPDT

Product Facts

- **Excellent signal isolation, stable insertion loss and low VSWR**
- **Provide repeatable RF performance at frequencies up to the 3 GHz. level (MW3/MW3HP), 4 GHz. level (MW4/MW4HP) & 6 GHz. level (MW6/MW6HP)**
- **Standard versions for applications ranging from wireless communications to precision high-speed test equipment**
- **High performance (HP) versions for use under more demanding environmental conditions**
- **Standard or sensitive (S) coils are offered in a range of DC input voltages**
- **2 Form C (DPDT) contacts rated low-level to 1 amp**
- **Extended mechanical life expectancy of 10 million operations**
- **Robust, hermetically sealed enclosure**

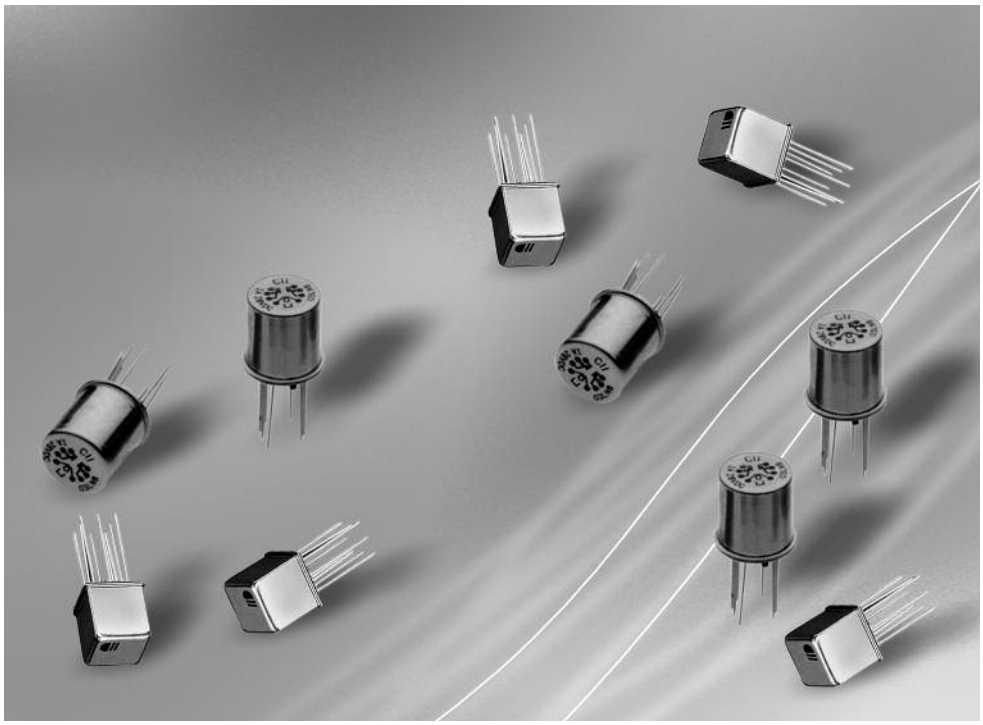

These CII relays provide microwave frequency switching in a hermetically sealed, subminiature package.

Both standard and high performance models are offered in 3 GHz., 4 GHz. and 6 GHz. types.

Standard models (MW3, MW4 and MW6) perform in temperature ranges from -55°C to +85°C and withstand 10G vibration and 30G shock.

High performance models (MW3HP, MW4HP and MW6HP) offer extended temperature ratings of -65°C to +125°C while providing 30G's vibration and 100G's shock (75G's for MW3) environmental ratings.

All are available with either standard or sensitive DC coils. Nominal coil power is 367-500mW (model dependent) for standard coils and 169-250mW for sensitive coils.

Signal isolation is 18dB at 6 GHz. (MW6/MW6HP), 18dB at 4 GHz. (MW4/MW4HP), and 22dB at 3 GHz. (MW3/MW3HP).

Insertion loss is 0.38dB for MW6/MW6HP, 0.27dB for MW4/MW4HP, and 0.36dB for MW3/MW3HP.

VSWR is a low 1.30:1 @ 6GHz. for MW6/MW6HP, 1.36:1 @ 4GHz. for MW4/MW4HP, and 1.24:1 @ 3GHz. for MW3/MW3HP.

Catalog 5-1773450-5
Revised 3-13

www.te.com

Dimensions are shown for reference purposes only. Specifications subject to change.

Dimensions are in millimeters unless otherwise specified.

USA: +1 800 522 6752
Asia Pacific: +86 0 400 820 6015
UK: +44 800 267 666

For additional support numbers please visit www.te.com

Double Pole, Electrically Held, 1 Amp and Less (Continued)

Microwave Switching, Hermetically Sealed, DPDT

MW3 & MW3HP Models 3 GHz. Switching

Electrical Characteristics

Contact Arrangement —
2 Form C (DPDT)

Contact Resistance —
Before life — 100 milliohms, max. (measured @ 10 mA @ 6 VDC)
After life — 200 milliohms, max. (measured @ 1 A @ 28 VDC)

Mechanical Life Expectancy —
10 million operations

Coil Voltages —
5, 12, 18 & 26.5 VDC (MW3)
5, 6, 9, 12, 18 & 26.5 VDC (MW3HP)

Coil Power (mW max. @ 25°C) —

MW3	MW3S	MW3HP	MW3HPS
675	565	673	563

Duty Cycle — Continuous

Pick-up Voltage —
MW3 — Approx 70% of nominal.
MW3HP — Approx 50% of nominal.

Pick-up Sensitivity (mW max. @ 25°C) —

MW3	MW3S	MW3HP	MW3HPS
180	90	146	68

Operating Characteristics

Operate Time (ms max.) —

MW3	MW3S	MW3HP	MW3HPS
4.0	6.0	2.0	4.0

Release Time (ms max.)

MW3	MW3S	MW3HP	MW3HPS
3.0	3.0	1.5	2.0

Bounce Time (ms max.)

MW3	MW3S	MW3HP	MW3HPS
—	—	1.5	1.5

Dielectric Withstanding Voltage —
Between Open Contacts,
Between Adjacent Contacts and Between Contacts and Coil —
MW3 types — 350 Vrms, 60 Hz.
MW3HP types — 500 Vrms, 60 Hz.

Insulation Resistance —
1,000 megohms @ 500 VDC

Environmental Characteristics

Temperature Range —
MW3 types — -55°C to +85°C.
MW3HP types — -65°C to +125°C.

Weight —
MW3, MW3HP: 0.09 oz. (2.55 g)
MW3S, MW3HPS: 0.12 oz. (3.40 g).

Vibration Resistance —
MW3 types — 10 G's, 10-500 Hz.
MW3HP types — 30 G's, 10-3,000 Hz

Shock Resistance —
MW3 types — 30 G's, 6 ± 1 ms.
MW3HP types — 75 G's, 6 ± 1 ms.

Contact Ratings

Contact Load	Type	Operations Min.
1.0A @ 28VDC	Resistive	100,000
200mA @ 28VDC (300mH)*	Inductive	100,000
30µA @ 50mVDC	Low Level	10,000,000

* The inductive rating is only applicable to high performance models (MW3HP and MW3HPS).

Coil Data

MW3 Models

Nominal Coil Voltage (VDC)	Coil Resistance In Ohms ±20% @ 25°C	Pickup Voltage VDC (Max.) @ 25°C	Nominal Coil Power (mW) @ 25°C	Maximum Coil Voltage	Coil Desig.
Standard Coil					
5.0	50	3.6	500	5.8	5
12.0	390	8.4	369	16.0	12
18.0	880	13.0	368	24.0	18
26.5	1,560	17.0	450	32.0	26
Sensitive Coil					
5.0	100	3.5	250	7.5	5
12.0	850	9.0	169	20.0	12
18.0	1,600	13.5	203	30.0	18
26.5	3,300	18.0	213	40.0	26

MW3HP (High Performance) Models

Nominal Coil Voltage (VDC)	Coil Res. in Ohms ±10% @ 25°C	Pickup V VDC (Max.) @25°C	Release V VDC (Max.) @25°C	Release V VDC (Min.) @25°C	Nominal Coil Power (mW) @25°C	Maximum Coil Voltage	Coil Desig.
Standard Coil							
5.0	50	2.7	1.4	0.22	500	5.8	5
6.0	98	3.5	2.0	0.28	367	8.0	6
9.0	220	5.3	3.0	0.54	368	12.0	9
12.0	390	7.0	4.0	0.63	369	16.0	12
18.0	880	10.5	6.0	0.91	368	24.0	18
26.5	1,560	14.2	8.0	1.37	450	32.0	26
Sensitive Coil							
5.0	100	2.6	1.4	0.23	250	7.5	5
6.0	200	3.4	2.0	0.28	180	10.0	6
9.0	400	4.85	3.0	0.55	203	15.0	9
12.0	850	7.0	4.0	0.64	169	20.0	12
18.0	1,600	9.8	6.0	0.92	203	30.0	18
26.5	3,300	14.0	8.0	1.4	213	40.0	26

Catalog 5-1773450-5
Revised 3-13

www.te.com

Dimensions are shown for reference purposes only. Specifications subject to change.

Dimensions are in millimeters unless otherwise specified.

USA: +1 800 522 6752
Asia Pacific: +86 0 400 820 6015
UK: +44 800 267 666

For additional support numbers please visit www.te.com

Double Pole, Electrically Held, 1 Amp and Less (Continued)

Microwave Switching, Hermetically Sealed, DPDT
MW3 & MW3HP Models, 3 GHz. Switching (Continued)

Insertion Loss & VSWR: NO Contacts

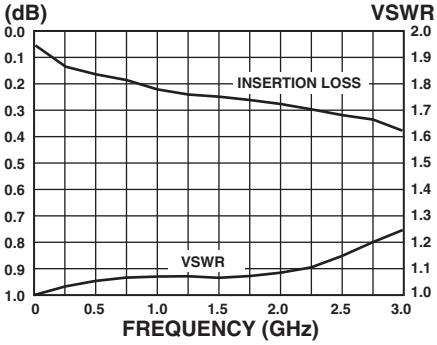

Insertion Loss & VSWR: NC Contacts

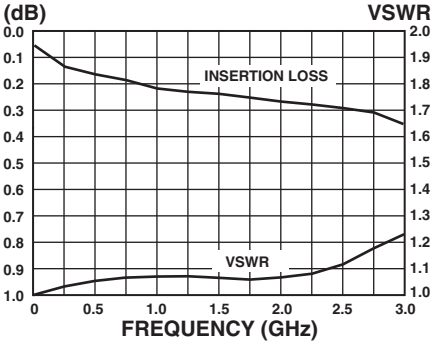

Isolation

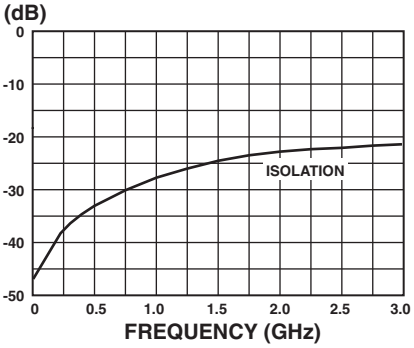

Test Conditions

Test Board — 0.031" double sided copper clad, PTFE based laminate.

Connections — Relay header is soldered to ground place. Relay terminals are soldered to through holes. SMA connectors are soldered to circuit traces.

Temperature — Room ambient.

Signal Strength — 0 dBm.

Notes:
1. Unused terminals were terminated with 50 ohm impedance load.
2. All readings are typical.

Enclosures

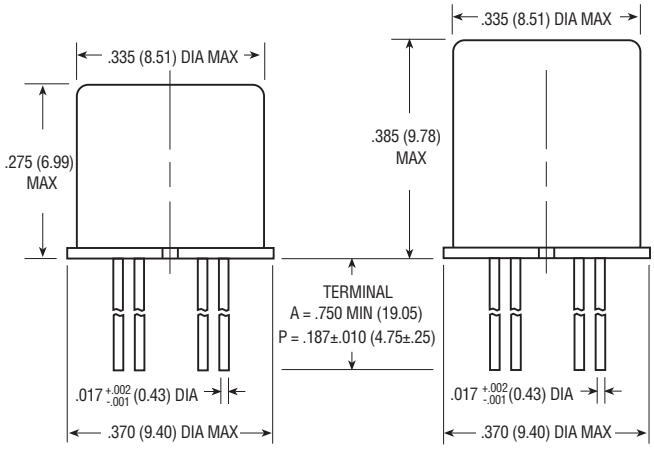

MW3 / MW3HP **MW3S / MW3HPS**

Header

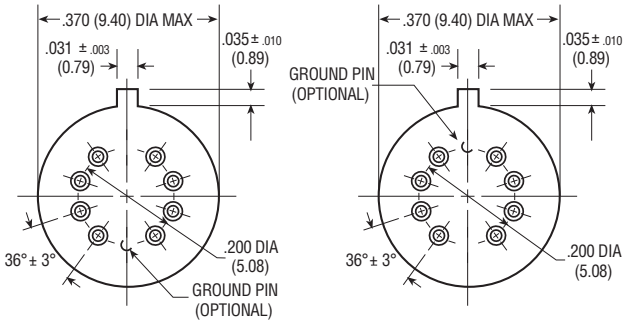

Ground Pin Position "G" **Ground Pin Position "E"**

For other ground pin configurations consult factory.

Header and Terminal Finish:
Nickel plated on MW3 & MW3S.
Tin-lead plated on MW3HP & MW3HPS.

Part Numbering System

Typical Part Number | MW3 | S | – 5 | A | G

Series:
MW3 = 3 GHz. switching relay
MW3HP = High performance 3 GHz. switching relay

Coil Sensitivity:
Leave Blank = Standard Coil S = Sensitive Coil

Coil Designator:
5 = 5VDC 6 = 6VDC† 9 = 9VDC†
12 = 12VDC 18 = 18VDC 26 = 26.5VDC
† 6 and 9 volt coil only available on high performance models.

Terminal Length:
A = 0.750 in (19.05 mm) P = 0.187 ± 0.010 in (4.75 ± 0.25 mm)

Ground Pin Position (see header drawings above):
G = Opposite locating tab E = Near locating tab.
Consult factory for other ground pin configurations.

Wiring Diagram

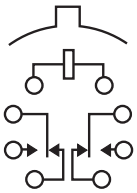

Terminal View

Dimensions are shown for reference purposes only. Specifications subject to change.

Dimensions are in millimeters unless otherwise specified.

USA: +1 800 522 6752
Asia Pacific: +86 0 400 820 6015
UK: +44 800 267 666

For additional support numbers please visit www.te.com

Double Pole, Electrically Held, 1 Amp and Less (Continued)

Microwave Switching, Hermetically Sealed, DPDT

MW4 & MW4HP Models 4 GHz. Switching

Electrical Characteristics

Contact Arrangement —
2 Form C (DPDT)

Contact Resistance —
Before life — 100 milliohms, max. (measured @ 10 mA @ 6 VDC)
After life — 200 milliohms, max. (measured @ 1 A @ 28 VDC)

Mechanical Life Expectancy —
10 million operations

Coil Voltages —
5, 12, 18 & 26.5 VDC (MW4)
5, 6, 9, 12, 18 & 26.5 VDC (MW4HP)

Coil Power (mW max. @ 25°C) —

MW4	MW4S	MW4HP	MW4HPS
675	565	673	563

Duty Cycle — Continuous

Pick-up Voltage —
MW4 — Approx 70% of nominal.
MW4HP — Approx 50% of nominal.

Pick-up Sensitivity (mW max. @ 25°C) —

MW4	MW4S	MW4HP	MW4HPS
180	90	123	68

Operating Characteristics

Operate Time (ms max.) —

MW4	MW4S	MW4HP	MW4HPS
4.0	6.0	2.0	4.0

Release Time (ms max.)

MW4	MW4S	MW4HP	MW4HPS
3.0	3.0	1.5	2.0

Bounce Time (ms max.)

MW4	MW4S	MW4HP	MW4HPS
—	—	1.5	1.5

Dielectric Withstanding Voltage —
Between Open Contacts,
Between Adjacent Contacts and Between Contacts and Coil —
MW4 types — 350 Vrms, 60 Hz.
MW4HP types — 500 Vrms, 60 Hz.

Insulation Resistance —
1,000 megohms @ 500 VDC

Environmental Characteristics

Temperature Range —
MW4 types — -55°C to +85°C.
MW4HP types — -65°C to +125°C.

Weight —
MW4, MW4HP: 0.09 oz. (2.55 g)
MW4S, MW4HPS: 0.12 oz. (3.40 g).

Vibration Resistance —
MW4 types — 10 G's, 10-500 Hz.
MW4HP types — 30 G's, 10-3,000 Hz

Shock Resistance —
MW4 types — 30 G's, 6 ± 1 ms.
MW4HP types — 100 G's, 6 ± 1 ms.

Contact Ratings

Contact Load	Type	Operations Min.
1.0A @ 28VDC	Resistive	100,000
200mA @ 28VDC (300mH)*	Inductive	100,000
30µA @ 50mVDC	Low Level	10,000,000

* The inductive rating is only applicable to high performance models (MW4HP and MW4HPS).

Coil Data

MW4 Models

Nominal Coil Voltage (VDC)	Coil Resistance In Ohms ±20% @ 25°C	Pickup Voltage VDC (Max.) @ 25°C	Nominal Coil Power (mW) @ 25°C	Maximum Coil Voltage	Coil Desig.
Standard Coil					
5.0	50	3.6	500	5.8	5
12.0	390	8.4	369	16.0	12
18.0	880	13.0	368	24.0	18
26.5	1,560	17.0	450	32.0	26
Sensitive Coil					
5.0	100	3.5	250	7.5	5
12.0	850	9.0	169	20.0	12
18.0	1,600	13.5	203	30.0	18
26.5	3,300	18.0	213	40.0	26

MW4HP (High Performance) Models

Nominal Coil Voltage (VDC)	Coil Res. in Ohms ±10% @ 25°C	Pickup V VDC (Max.) @25°C	Release V VDC (Max.) @25°C	Release V VDC (Min.) @25°C	Nominal Coil Power (mW) @25°C	Maximum Coil Voltage	Coil Desig.
Standard Coil							
5.0	50	2.7	1.4	0.22	500	5.8	5
6.0	98	3.5	2.0	0.28	367	8.0	6
9.0	220	5.3	3.0	0.54	368	12.0	9
12.0	390	7.0	4.0	0.63	369	16.0	12
18.0	880	10.5	6.0	0.91	368	24.0	18
26.5	1,560	14.2	8.0	1.37	450	32.0	26
Sensitive Coil							
5.0	100	2.6	1.4	0.23	250	7.5	5
6.0	200	3.4	2.0	0.28	180	10.0	6
9.0	400	4.85	3.0	0.55	203	15.0	9
12.0	850	7.0	4.0	0.64	169	20.0	12
18.0	1,600	9.8	6.0	0.92	203	30.0	18
26.5	3,300	14.0	8.0	1.4	213	40.0	26

Catalog 5-1773450-5
Revised 3-13

www.te.com

Dimensions are shown for reference purposes only. Specifications subject to change.

Dimensions are in millimeters unless otherwise specified.

USA: +1 800 522 6752
Asia Pacific: +86 0 400 820 6015
UK: +44 800 267 666

For additional support numbers please visit www.te.com

Double Pole, Electrically Held, 1 Amp and Less (Continued)

Microwave Switching, Hermetically Sealed, DPDT

MW4 & MW4HP Models4 GHz. Switching (Continued)

Insertion Loss & VSWR: NO Contacts

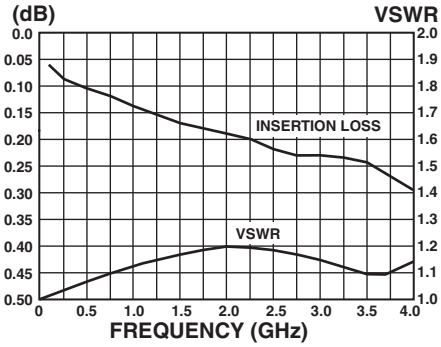

Insertion Loss & VSWR: NC Contacts

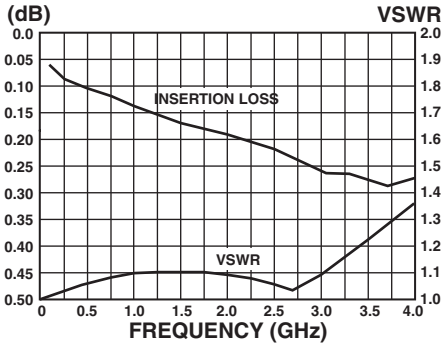

Isolation

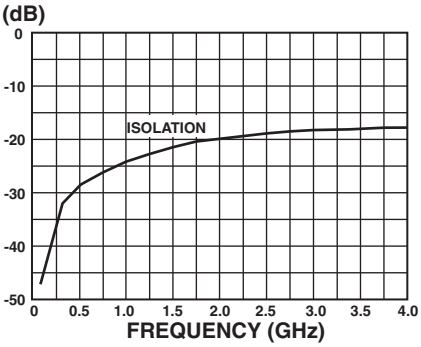

Test Conditions

Test Board — 0.031" double sided copper clad, PTFE based laminate.

Connections — Relay header is soldered to ground place. Relay terminals are soldered to through holes. SMA connectors are soldered to circuit traces.

Temperature — Room ambient.

Signal Strength — 0 dBm.

Notes:

1. Unused terminals were terminated with 50 ohm impedance load.
2. All readings are typical.

Enclosures

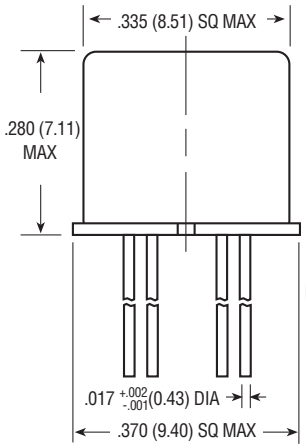

MW4 / MW4HP

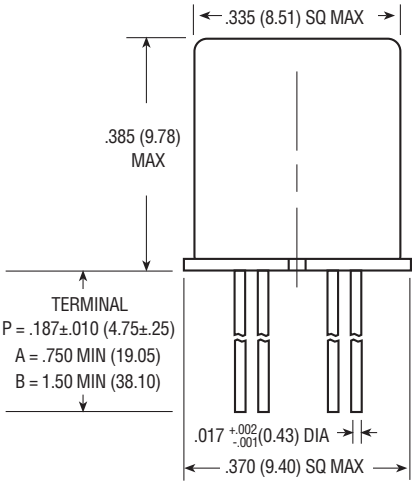

MW4S / MW4HPS

Header

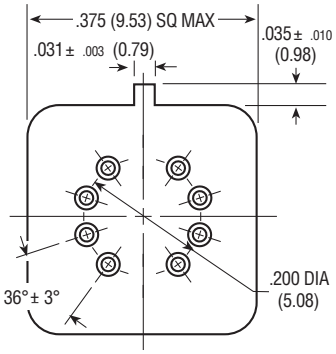

Header and Terminal Finish: Gold plated

Part Numbering System

Typical Part Number | **MW4** | **S** | **– 5** | **P**

Series:
MW4 = 4 GHz. switching relay
MW4HP = High performance 4 GHz. switching relay

Coil Sensitivity:
Leave Blank = Standard Coil S = Sensitive Coil

Coil Designator:
5 = 5VDC 6 = 6VDC† 9 = 9VDC†
12 = 12VDC 18 = 18VDC 26 = 26.5VDC
† 6 and 9 volt coil only available on high performance models.

Terminal Length:
A = 0.750 in (19.05 mm)
B = 1.50 in (38.105 mm) – only available on high performance models
P = 0.187 ± 0.010 in (4.75 ± 0.25 mm)

Wiring Diagram

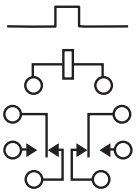

Terminal View

Catalog 5-1773450-5
Revised 3-13

www.te.com

Dimensions are shown for reference purposes only. Specifications subject to change.

Dimensions are in millimeters unless otherwise specified.

USA: +1 800 522 6752
Asia Pacific: +86 0 400 820 6015
UK: +44 800 267 666

For additional support numbers please visit www.te.com

Double Pole, Electrically Held, 1 Amp and Less (Continued)

Microwave Switching, Hermetically Sealed, DPDT

MW6 & MW6HP Models 6 GHz. Switching

Electrical Characteristics

Contact Arrangement —
2 Form C (DPDT)

Contact Resistance —
Before life — 100 milliohms, max. (measured @ 10 mA @ 6 VDC)
After life — 200 milliohms, max. (measured @ 1 A @ 28 VDC)

Mechanical Life Expectancy —
10 million operations

Coil Voltages —
5, 12, 18 & 26.5 VDC (MW6)
5, 6, 9, 12, 18 & 26.5 VDC (MW6HP)

Coil Power (mW max. @ 25°C) —

MW6	MW6S	MW6HP	MW6HPS
675	565	673	563

Duty Cycle — Continuous

Pick-up Voltage —
MW6 — Approx 70% of nominal.
MW6HP — Approx 50% of nominal.

Pick-up Sensitivity (mW max. @ 25°C) —

MW6	MW6S	MW6HP	MW6HPS
180	90	123	68

Operating Characteristics

Operate Time (ms max.) —

MW6	MW6S	MW6HP	MW6HPS
4.0	6.0	2.0	4.0

Release Time (ms max.)

MW6	MW6S	MW6HP	MW6HPS
3.0	3.0	1.5	2.0

Bounce Time (ms max.)

MW6	MW6S	MW6HP	MW6HPS
—	—	1.5	1.5

Dielectric Withstanding Voltage —
Between Open Contacts,
Between Adjacent Contacts and
Between Contacts and Coil —
MW6 types — 350 Vrms, 60 Hz.
MW6HP types — 500 Vrms, 60 Hz.

Insulation Resistance —
1,000 megohms @ 500 VDC

Environmental Characteristics

Temperature Range —
MW6 types — -55°C to +85°C.
MW6HP types — -65°C to +125°C.

Weight —
MW6, MW6HP: 0.09 oz. (2.55 g)
MW6S, MW6HPS: 0.12 oz. (3.40 g).

Vibration Resistance —
MW6 types — 10 G's, 10-500 Hz.
MW6HP types — 30 G's, 10-3,000 Hz

Shock Resistance —
MW6 types — 30 G's, 6 ± 1 ms.
MW6HP types — 100 G's, 6 ± 1 ms.

Contact Ratings

Contact Load	Type	Operations Min.
1.0A @ 28VDC	Resistive	100,000
200mA @ 28VDC (300 mH)*	Inductive	100,000
30µA @ 50mVDC	Low Level	10,000,000

* The inductive rating is only applicable to high performance models (MW6HP and MW6HPS).

Coil Data

MW6 Models

Nominal Coil Voltage (VDC)	Coil Resistance In Ohms ±20% @ 25°C	Pickup Voltage VDC (Max.) @ 25°C	Nominal Coil Power (mW) @ 25°C	Maximum Coil Voltage	Coil Desig.
Standard Coil					
5.0	50	3.6	500	5.8	5
12.0	390	8.4	369	16.0	12
18.0	880	13.0	368	24.0	18
26.5	1,560	17.0	450	32.0	26
Sensitive Coil					
5.0	100	3.5	250	7.5	5
12.0	850	9.0	169	20.0	12
18.0	1,600	13.5	203	30.0	18
26.5	3,300	18.0	213	40.0	26

MW6HP (High Performance) Models

Nominal Coil Voltage (VDC)	Coil Res. in Ohms ±10% @ 25°C	Pickup V VDC (Max.) @25°C	Release V VDC (Max.) @25°C	Release V VDC (Min.) @25°C	Nominal Coil Power (mW) @25°C	Maximum Coil Voltage	Coil Desig.
Standard Coil							
5.0	50	2.7	1.4	0.22	500	5.8	5
6.0	98	3.5	2.0	0.28	367	8.0	6
9.0	220	5.3	3.0	0.54	368	12.0	9
12.0	390	7.0	4.0	0.63	369	16.0	12
18.0	880	10.5	6.0	0.91	368	24.0	18
26.5	1,560	14.2	8.0	1.37	450	32.0	26
Sensitive Coil							
5.0	100	2.6	1.4	0.23	250	7.5	5
6.0	200	3.4	2.0	0.28	180	10.0	6
9.0	400	4.85	3.0	0.55	203	15.0	9
12.0	850	7.0	4.0	0.64	169	20.0	12
18.0	1,600	9.8	6.0	0.92	203	30.0	18
26.5	3,300	14.0	8.0	1.4	213	40.0	26

Catalog 5-1773450-5
Revised 3-13

www.te.com

Dimensions are shown for reference purposes only. Specifications subject to change.

Dimensions are in millimeters unless otherwise specified.

USA: +1 800 522 6752
Asia Pacific: +86 0 400 820 6015
UK: +44 800 267 666

For additional support numbers please visit www.te.com

Double Pole, Electrically Held, 1 Amp and Less (Continued)

Microwave Switching, Hermetically Sealed, DPDT

MW6 & MW6HP Models 6 GHz. Switching (Continued)

Insertion Loss & VSWR: NO Contacts

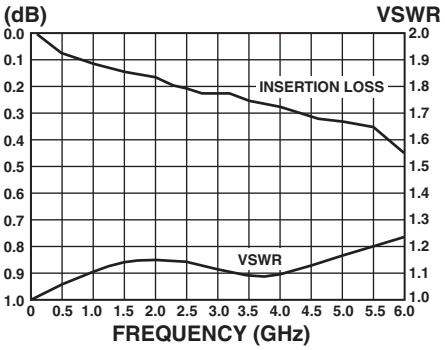

Insertion Loss & VSWR: NC Contacts

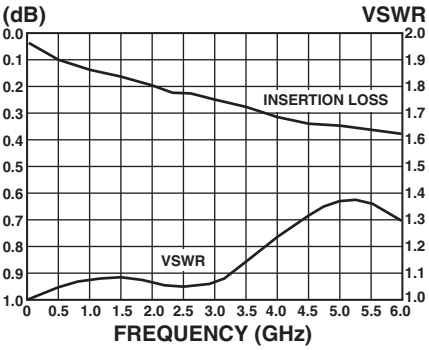

Isolation

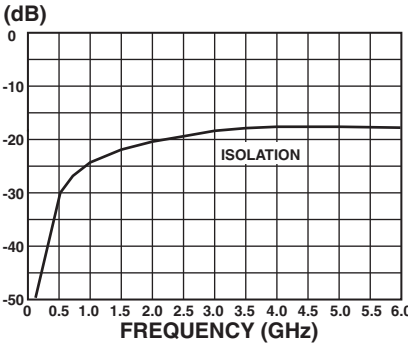

Test Conditions

Test Board — 0.031" double sided copper clad, PTFE based laminate.

Connections — Relay header is soldered to ground place. Relay terminals are soldered to through holes. SMA connectors are soldered to circuit traces.

Temperature — Room ambient.

Signal Strength — 0 dBm.

Notes:

1. Unused terminals were terminated with 50 ohm impedance load.
2. All readings are typical.

Enclosures

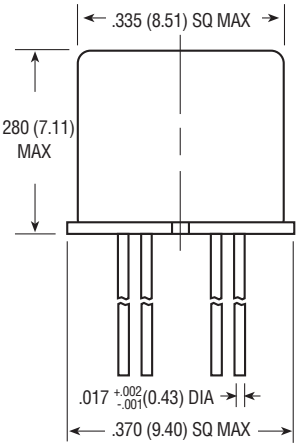

MW6 / MW6HP

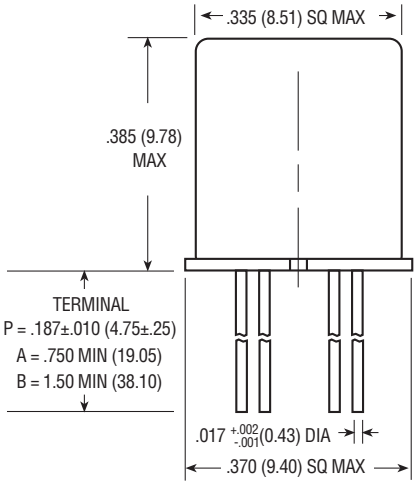

MW6S / MW6HPS

Header

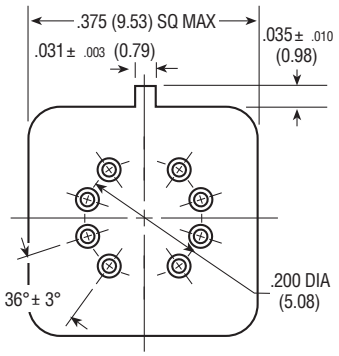

Header and Terminal Finish: Gold plated

Part Numbering System

Typical Part Number MW6 S – 5 P

Series:
MW6 = 6 GHz. switching relay
MW6HP = High performance 6 GHz. switching relay

Coil Sensitivity:
Leave Blank = Standard Coil S = Sensitive Coil

Coil Designator:
5 = 5VDC 6 = 6VDC† 9 = 9VDC†
12 = 12VDC 18 = 18VDC 26 = 26.5VDC
† 6 and 9 volt coil only available on high performance models.

Terminal Length:
A = 0.750 in (19.05 mm)
B = 1.50 in (38.105 mm) – only available on high performance models
P = 0.187 ± 0.010 in (4.75 ± 0.25 mm)

Wiring Diagram

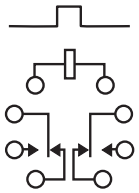

Terminal View

Catalog 5-1773450-5
Revised 3-13

www.te.com

Dimensions are shown for reference purposes only. Specifications subject to change.

Dimensions are in millimeters unless otherwise specified.

USA: +1 800 522 6752
Asia Pacific: +86 0 400 820 6015
UK: +44 800 267 666

For additional support numbers please visit www.te.com

Table of Contents

Double Pole, Electrically Held, 1 Amp and Less
MAV, MAVD, MAVDD 3-2, 3-3
MSV, MSVD 3-4, 3-5

Catalog 5-1773450-5
Revised 3-13

www.te.com

Dimensions are shown for reference purposes only. Specifications subject to change.

Dimensions are in millimeters unless otherwise specified.

USA: +1 800 522 6752
Asia Pacific: +86 0 400 820 6015
UK: +44 800 267 666

For additional support numbers please visit www.te.com

Double Pole, Electrically Held, 1 Amp and Less

MAV, MAVD, MAVDD

MAV

Standard High Vibration TO-5 High Performance Relay

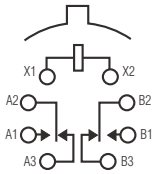

Terminal View

Product Facts

- Hermetically sealed
- Extreme shock & vibration ratings
- Spreader pads

MAVD

Standard High Vibration TO-5 Diode Suppressed High Performance Relay

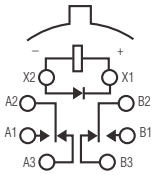

Terminal View

Product Facts

- Suppression diode
- Hermetically sealed
- Extreme shock & vibration ratings
- Spreader pads

MAVDD

Standard High Vibration TO-5 Diode Suppressed/Protected High Performance Relay

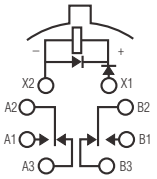

Terminal View

Product Facts

- Suppression & protection diodes
- Hermetically sealed
- Extreme shock & vibration ratings
- Spreader pads

Electrical Characteristics

Contact Arrangement — 2 Form C (DPDT)

Contact Material — Stationary — Gold/platinum/palladium/silver alloy (Gold plated) Moveable — Gold/platinum/palladium/silver alloy (Gold plated)

Contact Resistance — Before Life — 100 milliohms max. (measured @ 10 mA @ 6 Vdc) After Life — 200 milliohms max. (measured @ 1 A @ 28 Vdc)

Mechanical Life Expectancy — 1 million operations

Coil Voltage — 5 to 26.5 Vdc

Coil Power — 820 mW max. @ 25°C

Duty Cycle — Continuous

Pick-up Voltage — Approximately 70% of Nominal Coil Voltage

Pick-up Sensitivity — 370 mW max. @ 25°C

Contact Ratings

Contact Load	Type	Operations Min.
1.0 A @ 28 Vdc	Resistive	100,000
250 mA @ 115 Vac, 60 Hz & 400 Hz	Resistive (Case not grounded)	100,000
100 mA @ 115 Vac, 60 Hz & 400 Hz	Resistive	100,000
0.2 A @ 28 Vdc	Inductive (0.32 Henry)	100,000
0.1A @ 28 Vdc	Lamp	100,000
30 µA @ 50 mVdc	Low Level	1,000,000
0.1 A @ 28 Vdc	Intermediate Current	50,000

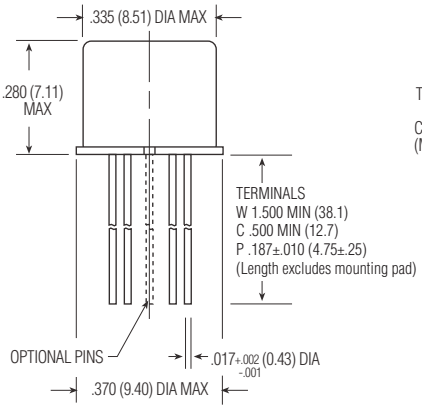

Enclosure

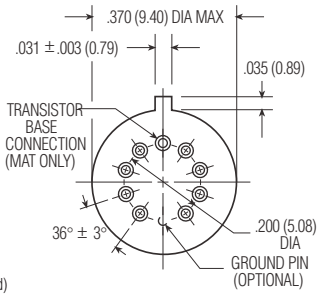

MAV/MAVD/MAVDD Header

Catalog 5-1773450-5
Revised 3-13

www.te.com

Dimensions are shown for reference purposes only. Specifications subject to change.

Dimensions are in millimeters unless otherwise specified.

USA: +1 800 522 6752
Asia Pacific: +86 0 400 820 6015
UK: +44 800 267 666

For additional support numbers please visit www.te.com

Double Pole, Electrically Held, 1 Amp and Less (Continued)

MAV, MAVD, MAVDD
(Continued)

Operating Characteristics

Operate Time — 2.0 ms max.

Release Time —
MAV — 1.5 ms max.
MAVD / MAVDD — 4.0 ms max.
(suppression diode, suppression/ steering diodes)

Contact Bounce — 1.5 ms max.

Dielectric Withstanding Voltage —
Between Open Contacts —
500 Vrms 60 Hz
Between Adjacent Contacts —
500 Vrms 60 Hz
Between Contacts and Coil —
500 Vrms 60 Hz

Insulation Resistance —
10,000 megohms min. @ 500 Vdc
1,000 megohms @ 500 Vdc (coil to case at +125°C)

Environmental Characteristics

Temperature Range —
-65°C to +125°C

Weight —
0.09 oz. (2.55 grms)
0.10 oz. (2.80 grms) with spreader pad attached

Vibration Resistance —
100 G's, 10 - 2,000 Hz
250 G's, 140 +/- 5 Hz
350 G's, 170 +/- 5 Hz
380 G's, 200 +/- 5 Hz

Shock Resistance —
150 G's, 11 ± 1ms max.

Semiconductor Characteristics

Diode —
100 Vdc peak inverse voltage (PIV)
1.0 Vdc max. transient voltage

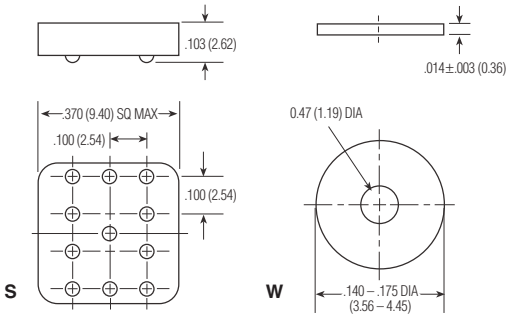

Spreader & Mounting Pads

Coil Data

Nom. Coil Voltage (Vdc)	Coil Resistance in Ohms ±10% @ 25°C (Note 1)	Coil Circuit Current mA (Max.) (Note 1)	Coil Circuit Current mA (Min.) (Note 1)	Pickup Voltage Vdc (Max.) @ 25°C	Pickup Voltage Vdc (Max.) @ 125°C	Drop-Out Voltage Vdc (Min.) @ 25°C	Drop-Out Voltage Vdc (Min.) @ -65°C	Nom. Coil Power (mW) @ 25°C	Max. Coil Voltage	Coil Desig.
MAV										
5.0	50	n/a	n/a	3.5	4.6	0.22	0.14	500	5.8	5
6.0	70	n/a	n/a	4.0	5.5	0.28	0.18	514	8.0	6
9.0	155	n/a	n/a	5.9	8.2	0.54	0.35	523	12.0	9
12.0	235	n/a	n/a	8.0	11.0	0.63	0.41	613	16.0	12
18.0	610	n/a	n/a	11.9	16.5	0.91	0.59	531	24.0	18
26.5	1,130	n/a	n/a	15.9	22.0	1.37	0.89	621	32.0	26
MAVD										
5.0	33	n/a	n/a	3.5	4.6	0.22	0.14	758	5.8	5
6.0	44	n/a	n/a	4.0	5.5	0.28	0.18	818	8.0	6
9.0	125	n/a	n/a	5.9	8.2	0.54	0.35	648	12.0	9
12.0	215	n/a	n/a	8.0	11.0	0.63	0.41	670	16.0	12
18.0	470	n/a	n/a	11.9	16.5	0.91	0.59	689	24.0	18
26.5	1,050	n/a	n/a	15.9	22.0	1.37	0.89	669	32.0	26
MAVDD										
5.0	33	126.4	92.8	3.5	4.6	0.6	0.6	758	5.8	5
6.0	44	122.6	90.4	4.0	5.5	0.7	0.7	818	8.0	6
9.0	125	73.4	54.3	5.9	8.2	0.9	0.8	648	12.0	9
12.0	215	59.4	37.8	8.0	11.0	1.1	0.9	670	16.0	12
18.0	470	42.0	31.3	11.9	16.5	1.4	1.1	689	24.0	18
26.5	1,050	28.3	21.3	15.9	22.0	1.8	1.4	669	32.0	26

Note: 1. Coil resistance not directly measurable in MAVDD series.
Coil current should be within limits shown when tested at nominal voltage at 25°C for 5 seconds maximum.

HOW TO SPECIFY A PART NUMBER

For our standard catalog High Performance products, the Part Number begins with the series designator shown below.

Specifying a Part Number Example:	Series	Terminals	Diodes	Ground Pins	Coils	Spreader/ Mounting Pads
	MAV	C	D	G	-26	S

Dimensions are shown for reference purposes only. Specifications subject to change.

Dimensions are in millimeters unless otherwise specified.

USA: +1 800 522 6752
Asia Pacific: +86 0 400 820 6015
UK: +44 800 267 666

For additional support numbers please visit www.te.com

Double Pole, Electrically Held, 1 Amp and Less (Continued)

MSV, MSVD

MSV

Sensitive
High Vibration TO-5
High Performance Relay

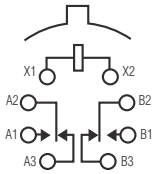

Terminal View

Product Facts

- **Hermetically sealed**
- **Extreme shock & vibration ratings**
- **Spreader pads**

MSVD

Sensitive
High Vibration TO-5
Diode Suppressed
High Performance Relay

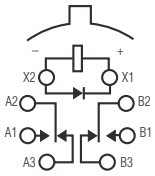

Terminal View

Product Facts

- **Suppression diode**
- **Hermetically sealed**
- **Extreme shock & vibration ratings**
- **Spreader pads**

Electrical Characteristics

Contact Arrangement — 2 Form C (DPDT)

Contact Material — Stationary — Gold/platinum/palladium/silver alloy (Gold plated)
Moveable — Gold/platinum/palladium/silver alloy (Gold plated)

Contact Resistance — Before Life — 100 milliohms max. (measured @ 10 mA @ 6 Vdc)
After Life — 200 milliohms max. (measured @ 1 A @ 28 Vdc)

Mechanical Life Expectancy — 1 million operations

Coil Voltage — 5 to 26.5 Vdc

Coil Power — 370 mW max. @ 25°C

Duty Cycle — Continuous

Pick-up Voltage — Approximately 70% of Nominal Coil Voltage

Pick-up Sensitivity — 155 mW max. @ 25°C

Contact Ratings

Contact Load	Type	Operations Min.
1.0 A @ 28 Vdc	Resistive	100,000
250 mA @ 115 Vac, 60 Hz & 400 Hz	Resistive (Case not grounded)	100,000
100 mA @ 115 Vac, 60 Hz & 400 Hz	Resistive	100,000
0.2 A @ 28 Vdc	Inductive (0.32 Henry)	100,000
0.1A @ 28 Vdc	Lamp	100,000
30 µA @ 50 mVdc	Low Level	1,000,000
0.1 A @ 28 Vdc	Intermediate Current	50,000

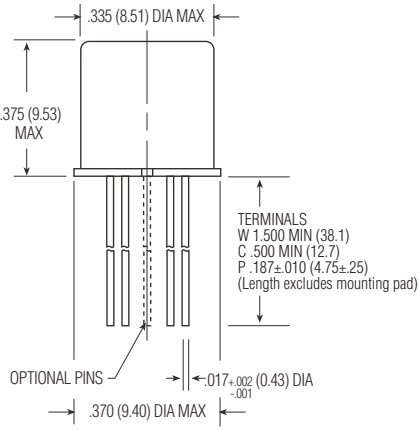

Enclosure

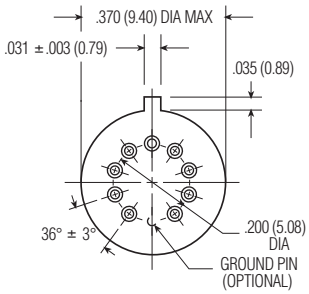

MSV/MSVDD Header

Catalog 5-1773450-5
Revised 3-13

www.te.com

Dimensions are shown for reference purposes only. Specifications subject to change.

Dimensions are in millimeters unless otherwise specified.

USA: +1 800 522 6752
Asia Pacific: +86 0 400 820 6015
UK: +44 800 267 666

For additional support numbers please visit www.te.com

Double Pole, Electrically Held, 1 Amp and Less (Continued)

MSV, MSVD (Continued)

Operating Characteristics

Operate Time — 4.0 ms max.

Release Time —
MSV — 2.0 ms max.
MSVD — 7.5 ms max.
(suppression diode)

Contact Bounce — 1.5 ms max.

Dielectric Withstanding Voltage —
Between Open Contacts —
500 Vrms 60 Hz
Between Adjacent Contacts —
500 Vrms 60 Hz
Between Contacts and Coil —
500 Vrms 60 Hz

Insulation Resistance —
10,000 megohms min. @ 500 Vdc
1,000 megohms @ 500 Vdc (coil to case at +125°C)

Environmental Characteristics

Temperature Range —
-65°C to +125°C

Weight —
0.09 oz. (2.55 grms)
0.10 oz. (2.80 grms) with spreader pad attached

Vibration Resistance —
100 G's, 10 - 2,000 Hz
250 G's, 140 +/- 5 Hz
350 G's, 170 +/- 5 Hz
380 G's, 200 +/- 5 Hz

Shock Resistance —
150 G's, 11 ± 1ms max.

Semiconductor Characteristics

Diode —
100 Vdc peak inverse voltage (PIV)
1.0 Vdc max. transient voltage

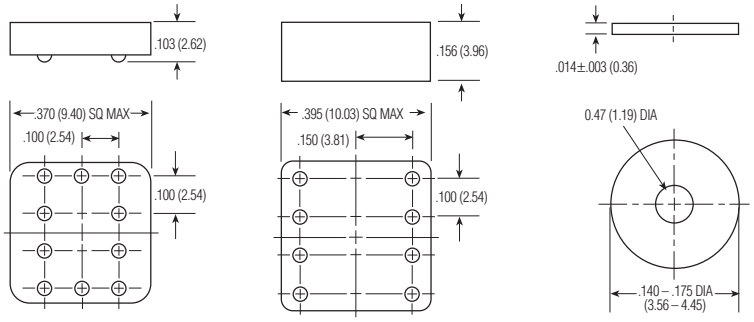

Spreader & Mounting Pads

Coil Data

Nom. Coil Voltage (Vdc)	Coil Resistance in Ohms ±10% @ 25°C	Pickup Voltage Vdc (Max.) @ 25°C	Pickup Voltage Vdc (Max.) @ 125°C	Drop-Out Voltage Vdc (Min.) @ 25°C	Drop-Out Voltage Vdc (Min.) @ -65°C	Nom. Coil Power (mW) @ 25°C	Max. Coil Voltage	Coil Desig.
MSV / MSVD								
5.0	80	3.5	4.6	0.22	0.14	313	5.8	5
6.0	120	4.0	5.5	0.28	0.18	300	8.0	6
9.0	240	5.9	8.2	0.54	0.35	338	12.0	9
12.0	480	8.0	11.0	0.63	0.41	300	16.0	12
18.0	950	11.9	16.5	0.91	0.59	341	24.0	18
26.5	1,900	15.9	22.0	1.37	0.89	370	32.0	26

HOW TO SPECIFY A PART NUMBER

For our standard catalog High Performance products, the Part Number begins with the series designator shown below.

Specifying a Part Number Example:	Series	Terminals	Diodes	Ground Pins	Coils	Spreader/ Mounting Pads
	MSV	C	D	G	-26	S

Catalog 5-1773450-5
Revised 3-13

www.te.com

Dimensions are shown for reference purposes only. Specifications subject to change.

Dimensions are in millimeters unless otherwise specified.

USA: +1 800 522 6752
Asia Pacific: +86 0 400 820 6015
UK: +44 800 267 666

For additional support numbers please visit www.te.com

Engineering Notes

Catalog 5-1773450-5
Revised 3-13

www.te.com

Dimensions are shown for reference purposes only. Specifications subject to change.

Dimensions are in millimeters unless otherwise specified.

USA: +1 800 522 6752
Asia Pacific: +86 0 400 820 6015
UK: +44 800 267 666

For additional support numbers please visit www.te.com

Table of Contents

CII High Reliability Space Relays 4-2, 4-3
KILOVAC Space Relays 4-4

Catalog 5-1773450-5
Revised 3-13

www.te.com

Dimensions are shown for reference purposes only. Specifications subject to change.

Dimensions are in millimeters unless otherwise specified.

USA: +1 800 522 6752
Asia Pacific: +86 0 400 820 6015
UK: +44 800 267 666

For additional support numbers please visit www.te.com

CII High Reliability Space Relays

Product Testing

TE's CII High Reliability Space Relay products begin as relays manufactured to MIL-Spec requirements. They then receive additional processing and testing to particular customer specifications.

All operations and processes are documented as required by MIL-STD-790. Each operation and process has an accompanying route sheet that allows tracking of all materials and processes associated with an order. For those who require additional information, we can serialize, track and document the data for individual relays.

In addition to quality audits throughout the manufacturing process, our High Reliability Space relays are extensively tested to assure that your High Reliability standards and requirements are met or exceeded.

Our High Reliability Space Relay products are tested 100% for Group A parameters and then subjected to additional testing including: PIND, Small Particle Cleaning, Random, Vibration, and X-Ray. Group B and C testing is done for lot integrity based on MIL-R-39016. These test profiles are tailored to your individual requirements.

Destructive testing is often performed, based on the actual application of the device. On a "standard" QPL relay, this testing is performed periodically, and performance is assumed for the period of manufacture. In the High Reliability Space Relay, this performance is proven for each relay lot based on the testing and documentation of each serialized relay.

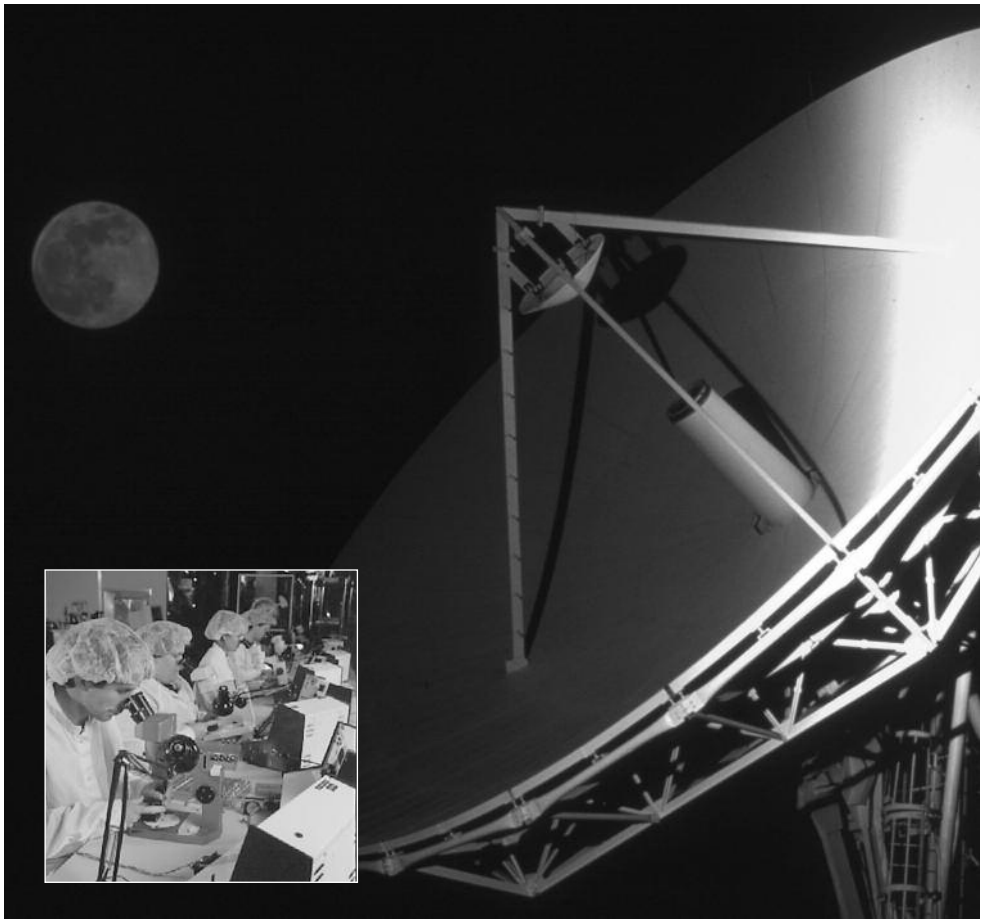

Clean Room

All of our High Reliability Space Relay products are manufactured in a temperature and humidity controlled environment utilizing a clean room area for sub-assemblies. All final assembly, intermediate testing, small particle cleaning, pre-cap inspection, and sealing is performed in an integrated, Class 1000 clean room that is temperature and humidity controlled in accordance with Federal Standard 209E. Temperature, humidity and air particle counts are monitored for precise control to ensure the integrity of the internal relay environment.

Dimensions are shown for reference purposes only. Specifications subject to change.

Dimensions are in millimeters unless otherwise specified.

USA: +1 800 522 6752
Asia Pacific: +86 0 400 820 6015
UK: +44 800 267 666

For additional support numbers please visit www.te.com

CII High Reliability Space Relays (Continued)

Products

- **Half Size Non-Latching**

Available in 2, 4 and 6 Form C configurations, low level to 5 amp switching.

- **Half Size Latching**

Available in 2 and 4 Form C configurations, low level to 2 amp switching.

- **One Fifth Non-Latching**

2 Form C, low level 2 amp switching.

- **TO-5/.100 Grid**

Available in 2 Form C, round and square outlines, low level to 1 amp switching, military qualified, optional spreader and mounting pads, ground pins, internal diodes, transistors, and hybrid assemblies.

Services

Our engineering staff, with over 100 years of combined experience in aerospace and High Reliability mil-spec relays, will help you find the right product for your needs. Our High Reliability Space Relays Department experts are cross-trained within their respective cells to achieve maximum quality and consistency. In addition, team and SPC training utilizing ISO 9000 concepts is given regularly.

Applications

- **Space Satellites (telecommunications)**
- **Weather Tracking**
- **Surveillance**
- **Infrared Observation Instrumentation**
- **Missile Systems**
- **Torpedo Guidance Circuits**

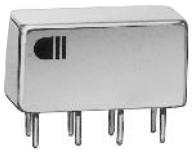

CII High Reliability Space Relays customers include ITT's HIRS/3 and AVHRR/3 instruments designed for the Polar Orbiting Environmental Satellite (POES) and McDonnell Douglas's Delta Launch II and III Vehicles.

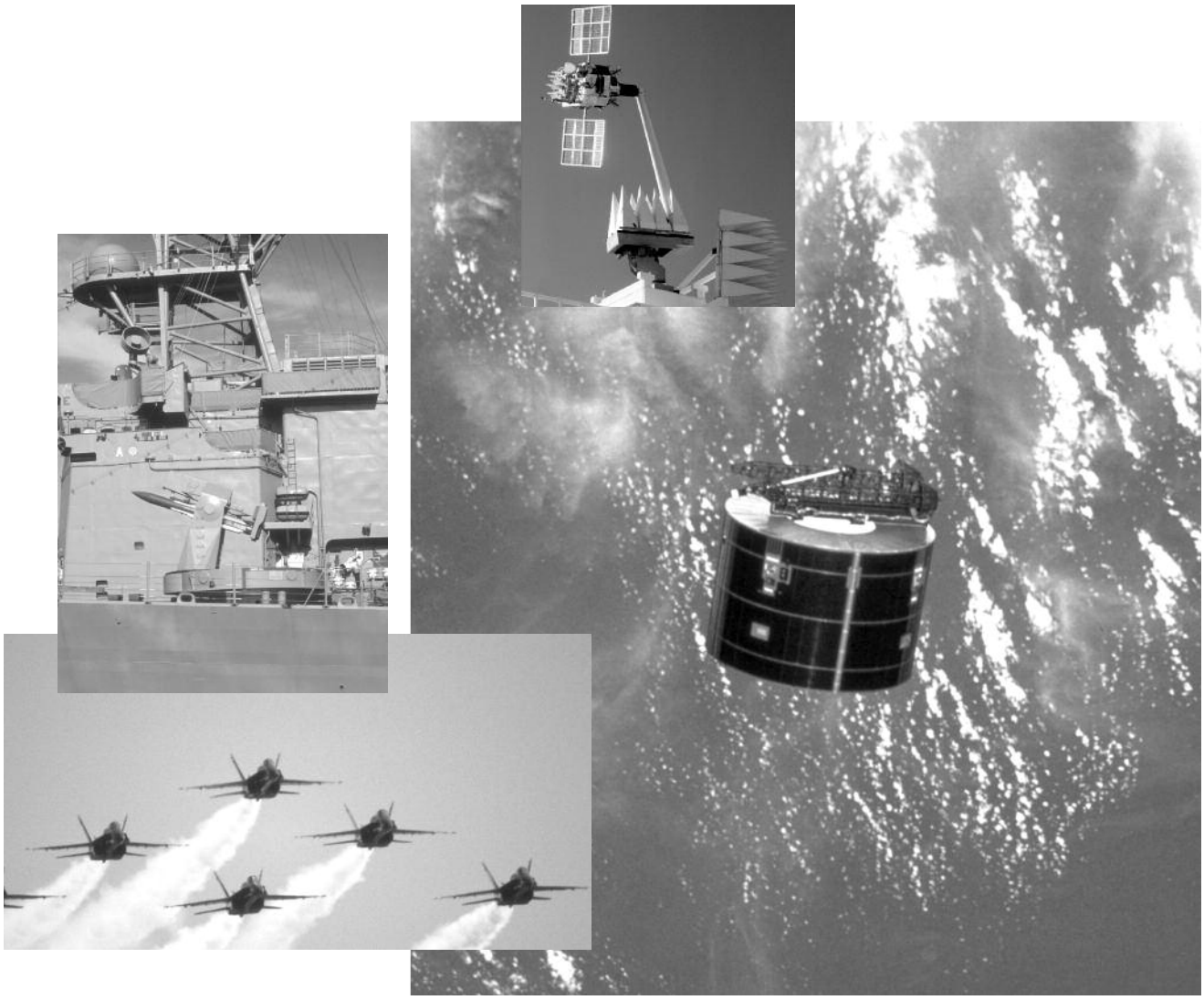

Catalog 5-1773450-5
Revised 3-13

www.te.com

Dimensions are shown for reference purposes only. Specifications subject to change.

Dimensions are in millimeters unless otherwise specified.

USA: +1 800 522 6752
Asia Pacific: +86 0 400 820 6015
UK: +44 800 267 666

For additional support numbers please visit www.te.com

Kilovac Space Relays

The KILOVAC brand of lightweight relays and contactors handle high-power DC or high-voltage DC requirements for the space industry.

They are available hermetically sealed, with a variety of electrical configurations, power ratings, voltage ratings, and mounting styles to make your electrical system more reliable and capable.

The photo to the right shows “representative samples” of our Kilovac brand relays and contactors for space applications.

Contact TE Connectivity for more information.

Products shown in photo as listed below:

Back Row - 270Vdc Space-Rated Contactors:

AP150X — 150A

AP90X — 90A

AP350X — 350A

Middle Row - Space-Rated Contactors:

MAP200 —

Available in Form X (Electrically Held) and Form P (Latching) configurations.

Available in Vertical-Mount (shown) and Horizontal-Mount configurations.

MAP100 —

Available in Form X (Electrically Held) and Form P (Latching) configurations.

Available in Horizontal-Mount (shown) and Vertical-Mount configurations.

Front Row - Space-Rated Relays:

AP10 — 10A, 270Vdc

Available in Form A (SPST-NO) and Form B (SPST-NC) configurations.

Available in Panel-Mount (shown), PCB-Mount, and Chassis-Mount (unpotted).

K41R — 5kVdc

SPDT-Latching configuration (SPST-Latching as well as SPST-NO, SPST-NC, and SPDT Electrically-Held configurations also available)

AP44P — 15A, 270Vdc

SPST-Latching

Catalog 5-1773450-5
Revised 3-13

www.te.com

Dimensions are shown for reference purposes only. Specifications subject to change.

Dimensions are in millimeters unless otherwise specified.

USA: +1 800 522 6752
Asia Pacific: +86 0 400 820 6015
UK: +44 800 267 666

For additional support numbers please visit www.te.com

Table of Contents

TD2 Series Time Delay Relays, per MIL-PRF-83726/28, /29, /30, & /31 . . . . . .5-2 – 5-5
Double-pole, Electrically Held, 5 Amps and Less
FCB-205 Series . . . . . .5-6 – 5-8
Four-pole, Electrically Held, 5 Amps and Less
FCB-405 Series . . . . . .5-9 – 5-11
Double-pole, Electrically Held, 15 Amps and Less
FCA-210 Series . . . . . .5-12 – 5-14
FCA-212 Series . . . . . .5-15 – 5-17
FCA-215 Series . . . . . .5-12 – 5-14
Four-pole, Electrically Held, 15 Amps and Less
FCA-410 Series . . . . . .5-18 – 5-20
FCA-415 Series . . . . . .5-18 – 5-20
Single-pole, Electrically Held, 25 Amps and Less
FCA-125 Series . . . . . .5-21 – 5-23
Three-pole, Electrically Held, 25 Amps and Less
FCA-325 Series . . . . . .5-24 – 5-26
Three-pole, Electrically Held, 25 Amps and Less, with Auxiliary Contacts
FCAC-325 Series . . . . . .5-27 – 5-29
Single-Pole, Electrically Held, 50 Amps or Less
FCA-150 . . . . . .5-30 – 5-33
Single-Pole, Electrically Held, 50 Amps and Less, Normally Closed, with Auxiliary Contacts
FCA-150NC . . . . . .5-34 – 5-37
Single Pole, Electrically Held, 50 Amps and Less, with Auxiliary Contacts
FCAC-150 . . . . . .5-38 – 5-41
Selection and Application Guide 5-42
Cross Reference - Socket to Relay 5-43

Catalog 5-1773450-5
Revised 3-13

www.te.com

Dimensions are shown for reference purposes only. Specifications subject to change.

Dimensions are in millimeters unless otherwise specified.

USA: +1 800 522 6752
Asia Pacific: +86 0 400 820 6015
UK: +44 800 267 666

For additional support numbers please visit www.te.com

TD2 Series Time Delay Relay

Product Facts

- **Qualified to:**

  MIL-PRF-83726/28
  MIL-PRF-83726/29
  MIL-PRF-83726/30
  MIL-PRF-83726/31
- **Fixed delay on operate, fixed delay on release, adjustable delay on operate & adjustable delay on release**
- **Meets or exceeds electrostatic discharge MIL-STD-1686 Class Non-Sensitive**
- **Welded hermetically sealed enclosure occupies about 1 in³ (16.4 cm³)**
- **10A, 2 form C (DPDT) output contacts**

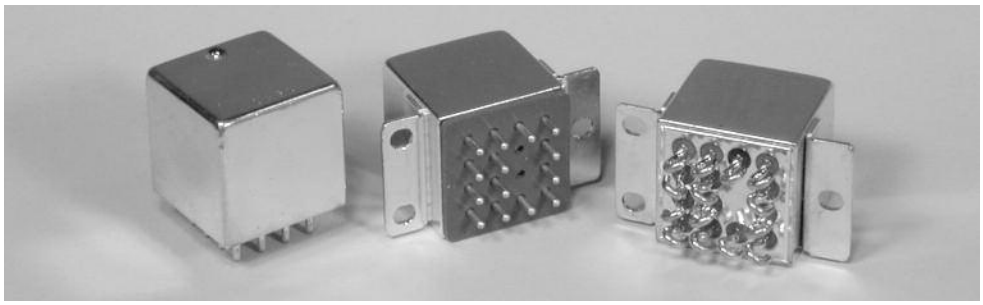

TD2 series time delay relays are available for delay on operate or delay on release operation. Either can be supplied as fixed or resistor adjustable types. Both military and commercial versions are offered.

These products consist of solid state timing circuits controlling our FCA-210 series relays, providing 2 Form C (DPDT) output contacts rated 10 amps. The internal timing circuit uses an R/C controlled oscillator with a programmable digital pulse counter, gating a semiconductor switch to operate the relay. Timing is independent of whether the controlling voltage is a ramp or step function.

For the adjustable models the user specifies a one decade range in seconds, within which the required delay will be set. This range is programmed internally at the time of manufacture. The required delay is obtained by calculating the oscillator timing resistor as follows and connecting it externally to terminals 1D - 3D as below.

$R_{EXT} = [(T_1 / T_0) -1]$ 100K Ohms

T_0 = Minimum time of selected decade in seconds.

T1 = Required time delay.

EXAMPLE

Selected Range = 3-30 sec

Required Time = 15 sec

$R_{EXT} = [(15/3) -1]$ 100K = 400K

Timing Action and Terminal Wiring

Delay On Operate:
The time delay starts on the application of input voltage to X1-X2. The timing circuit energizes the end of the time delay period.

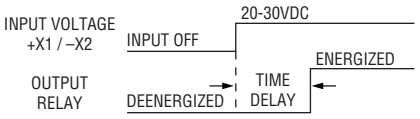

Fixed Model

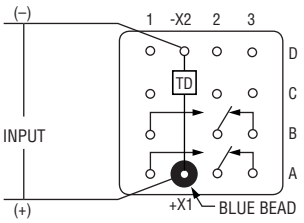

Adjustable Model

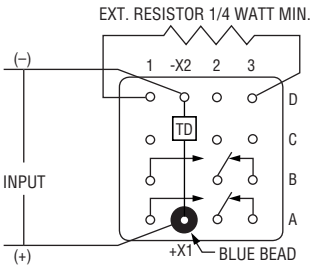

Delay On Release:
The input voltage is continuous to X1-X2. When the control voltage is applied to C1-X2 the timing circuit and the relay are both energized. The time delay starts when the control voltage is shut off.

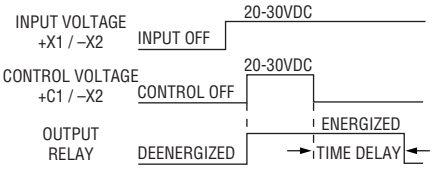

Fixed Model

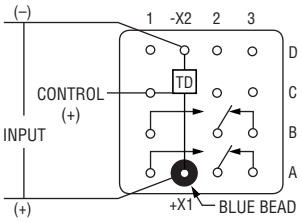

Adjustable Model

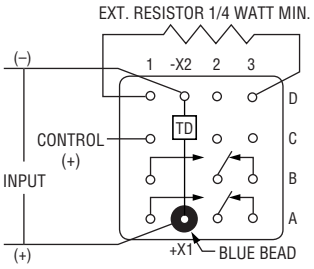

Terminal designations shown in the diagrams above are for reference only. They do not appear on the relay header.

Catalog 5-1773450-5
Revised 3-13

www.te.com

Dimensions are shown for reference purposes only. Specifications subject to change.

Dimensions are in millimeters unless otherwise specified.

USA: +1 800 522 6752
Asia Pacific: +86 0 400 820 6015
UK: +44 800 267 666

For additional support numbers please visit www.te.com

TD2 Series Time Delay Relay (Continued)

Specifications

Timing Data	
Timing Action	Delay on Operate or Delay on Release
Time Delay, Fixed – M83726/28, /29 and Commercial 28C, 29C	Select from 0.1 to 600 sec for Commercial Models Select from 0.1 to 500 sec for Mil-Spec Models
Time Delay, Adjustable – M83726/30, /31 and Commercial 30C, 31C	Select one decade between 0.1 to 1.0 and 60 to 600 seconds
Timing Accuracy (note 1)	±10% of Nominal Value
Recycle Time (note 2)	50 ms, max., to next cycle.
Power Interrupts	Accuracy is not affected by power interruptions up to 1 ms spaced at least 10ms apart.
Input Data	
Input Voltage	28 Vdc nominal, range 20 - 32 Vdc
Duty Rating	Continuous
Input Current	110 mAdc Max @ 25°C
Control Voltage (applies only to Delay on Release type)	20 - 32 Vdc
Control Current	15 mAdc Max (applies only to delay on release types)
Input Voltage Polarity Protection	The timer will be inoperative during, and undamaged by, reversal of the polarity of the input voltage.
Output Data	
Contact Form	2 Form C (DPDT)
Contact Material	Silver Cadmium Oxide, Gold plated
Contact Rating in Amps (Continuous Duty)	

Type of Load	Life (Min.) Cycles	28 Vdc	115 Vac 400Hz	115/200 Vac – 3 phase 400 Hz.	60 Hz.*
Resistive	100×10^3	10	10	10	2.5
Inductive	20×10^3	8	8	8	2.5
Motor	100×10^3	4	4	4	2.0
Lamp	100×10^3	2	2	2	1.0

* 60 Hz. loads are rated at 10×10^3 cycles.

Overload Current	40 Adc; 60A, 400 Hz.
Rupture Current	50 Adc; 80A, 400 Hz.
Max. Contact Drop at 10A	Initial 0.150V; After Life 0.175V
Electrical Data	
Electrostatic Discharge Withstand Voltage	16,000V
Transients (note 3):	
Positive Transients	+80V
Self-generated Transients	±50V, Max.
Spike Susceptibility	±600V, 10 µs, Max.
Insulation Resistance (note 4)	1,000 megohms at 500Vdc, between each pin and case
Dielectric Strength (note 4)	1,000Vrms at 60 Hz at sea level, between case and all pins connected together
Environmental Data	
Ambient Temperature Range, Operating	-55°C to +125°C
Altitude	80,000 feet maximum
Shock Resistance	100 G's, 6 ms.
Vibration Resistance, Sinusoidal	Z & Y Enclosure: 30 G's, 33-3000Hz.; X & W Enclosure: 20 G's, 33-3000Hz.
Mechanical Data	
Approximate Weight	2.5 oz. (71g) Max.

NOTES

1. The accuracy requirement applies to any combination of operating temperature and voltage. Add ±10ms for timing less than one second.
2. Recycle time to assure that the next timing cycle will be completed. Units can be recycled during timing and after time-out:
   Delay on operate models – Power must be OFF the input at least 10 ms. Delay on release models – Power must be ON the control terminal at least 10 ms.
3. Transient specifications are based on a maximum duty cycle of 1/50.
4. All wired terminals must be connected together during this test. Dielectric withstanding voltage and insulation resistance are measured between all mutually insulated wired terminals and between all these terminals and case.
5. Inductive loads must be diode suppressed.

Catalog 5-1773450-5
Revised 3-13

www.te.com

Dimensions are shown for reference purposes only. Specifications subject to change.

Dimensions are in millimeters unless otherwise specified.

USA: +1 800 522 6752
Asia Pacific: +86 0 400 820 6015
UK: +44 800 267 666

For additional support numbers please visit www.te.com

TD2 Series Time Delay Relay (Continued)

Outline Dimensions

The standard terminal types and enclosures are illustrated below with dimensions expressed as inches ± 0.010 and (millimeters ±0.25).

Terminals

All terminals on 0.200 (5.4) centers.

CODE "P"
Socket Pins – Gold Plated

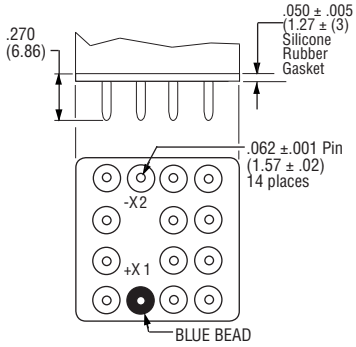

CODE "T"
Circuit Board Pins – Tin/Lead Plated

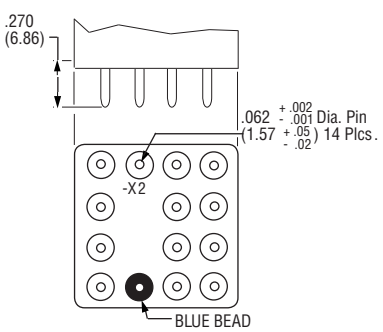

CODE "S"
Solder Hooks

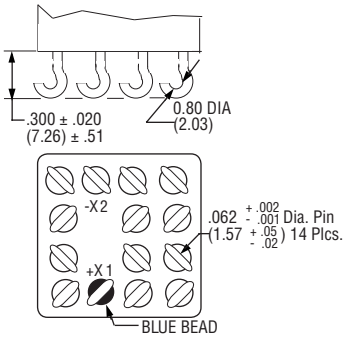

Enclosures

All Enclosures have cupro-nickel cans bright acid tin/lead plated after assembly to terminal headers.

CODE "Z"

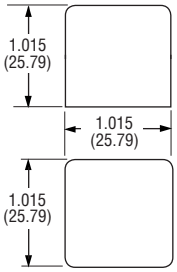

CODE "Y"

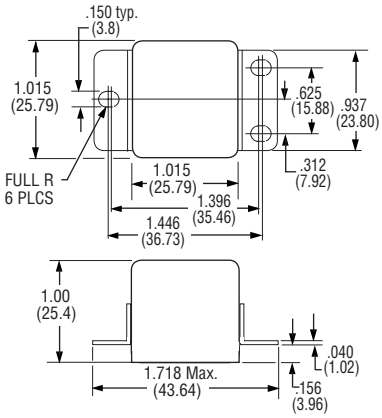

CODE "X"

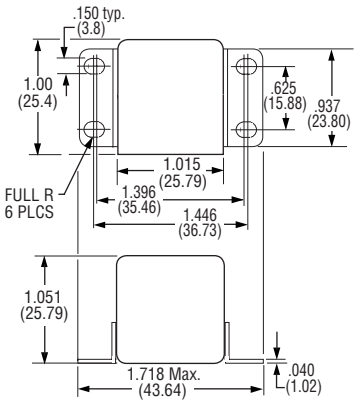

CODE "W"

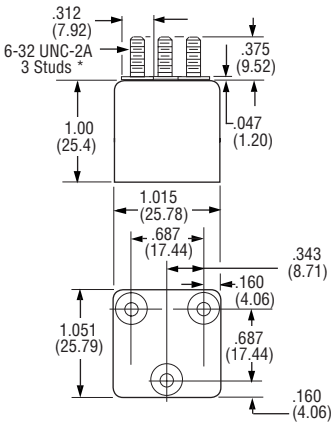

*Metric threads available. To specify use "M" in place of "W"

For factory-direct application assistance, phone 419-521-9500 or fax 419-526-2749.

TD2 Series Time Delay Relay (Continued)

Part Numbering System
Mil-Spec Types

Typical Mil-Spec Part Number | **TD2** | **28-** | **5002** | **P**

Series:

TD2 = Time delay relay with 2 pole, 10A output

Mil-Spec Model:

28 = M83726/28 (Fixed, Delay on Operate)
29 = M83726/29 (Fixed, Delay on Release)
30 = M83726/30 (Adjustable, Delay on Operate)
31 = M83726/31 (Adjustable, Delay on Release)

Time Delay Range (Within 0.1 to 500 seconds):

For /28 and /29 types (fixed types), the delay is expressed in milliseconds in a four-digit code. The first three digits are significant. The fourth is the number of zeros following the first three.
Example: 5002 is 50 seconds.

For /30 and /31 types (adjustable types), the delay decade range is expressed in milliseconds in a four-digit code representing the upper limit of the range. The first three digits are significant. The fourth is the number of zeros following the first three.
Example: 1001 is 1 second, so the range is 0.1 to 1 second.

Terminals:

P= Socket Pin Terminals
S= Solder Hook Terminals

Note: Mil-spec models have “Y” type enclosure.

Commercial Types

Typical Commercial Part Number | **TD2** | **28C-** | **1001** | **P** | **Y**

Series:

TD2 = Time delay relay with 2 pole, 10A output

Commercial Model:

28C = Fixed, Delay on Operate (COTS version of M83726/28)
29C = Fixed, Delay on Release (COTS version of M83726/29)
30C = Adjustable, Delay on Operate (COTS version of M83726/30)
31C = Adjustable, Delay on Release (COTS version of M83726/31)

Time Delay Range (Within 0.1 to 600 seconds):

For fixed types, the delay is expressed in milliseconds in a four-digit code. The first three digits are significant. The fourth is the number of zeros following the first three.
Example: 5002 is 50 seconds.

For adjustable types, the delay decade range is expressed in milliseconds in a four-digit code representing the upper limit of the range. The first three digits are significant. The fourth is the number of zeros following the first three.
Example: 1001 is 1 second, so the range is 0.1 to 1 second.

Terminals:

P= Socket Pin Terminals
S= Solder Hook Terminals
T= Solder Pin Terminals

Enclosure

W = Mounting Studs
X = Horizontal Flange Mount
Y = Raised Vertical Flange Mount
Z = No Mount

NOTE: Commercial versions are available with timing ranges outside of .1 to 600 sec. range.

For factory-direct application assistance, phone 419-521-9500 or fax 419-526-2749.

Catalog 5-1773450-5
Revised 3-13

www.te.com

Dimensions are shown for reference purposes only. Specifications subject to change.

Dimensions are in millimeters unless otherwise specified.

USA: +1 800 522 6752
Asia Pacific: +86 0 400 820 6015
UK: +44 800 267 666

For additional support numbers please visit www.te.com

FCB-205 Series, 5 Amperes, DPDT

Product Facts

- **Hermetically Sealed**
- **All Welded Construction**
- **Balanced Force**
- **Permanent Magnet Drive**
- **Contacts rated low level to 5 Amps VDC and 115/200 VAC 400 Hz, 3 Phase**
- **Weight .54 ounces max. (15.4 grams)**
- **Qualified to M83536/1, /2**

The Series FCB-205 relay is a polarized single-side stable design, where the flux from a permanent magnet provides the armature holding force in the deactivated state, and its flux path is switched and combined with the coil flux in the operated state. This results in appreciably increased contact pressure in both states over that of a spring return nonpolar design. We also manufacture other forms of the FCB relay:

FCB-405 — 5 Amp 4PDT Relay

Contact Rating — Amperes Ratings Are Continuous Duty

Type of Load	Life (Min.) Cycles x 10^3	28 VDC	115VAC 400Hz	115/200VAC 400Hz, 3Ø
Resistive	100	5	5	5
Inductive	20	3	5	5
Motor	100	2	3	3
Lamp	100	1	1	1

*60 Hz loads rated for 10,000 operations

Low Level Switching Capability: With contacts operating a load of 10 to 50 microamperes at 10 to 50 millivolts, the contact resistance miss detection level shall be 100 ohms max. Cycling rate is 1 to 12 per second, for 100,000 operations.

Overload Current — 20 AMPS DC, 30 AMPS 400Hz
Rupture Current — 25 AMPS DC, 40 AMPS 400Hz
Contact Make Bounce —1.0 MILLISECOND AT NOMINAL VOLTAGE
Max. Contact Drop at 5 Amps — INITIAL 0.100 VOLTS
End of Life — 0.125 VOLTS

General Specifications

Temperature Rating — -70˚C TO + 125˚C

Altitude — 300,000 Feet

Shock* —
Z, Y, & X Enclosures — 200 g for 6 mS
W & M Enclosures (Stud Mtg.) — 100 g for 6 mS
T Enclosure (Socket Mounted in Track) — 50 g for 11 mS

Vibration, Sinusoidal* —
Z, Y, & X Enclosures — 0.12 DA 10 to 70 Hz, 30 g 70-3000Hz
W & M Enclosures (Stud Mtg.) — 0.12 DA 10 to 57 Hz, 20 g 57-3000Hz
T Enclosure (Socket Mounted in Track) — 0.06 DA 10 to 57 Hz, 10 g 57 to 500Hz, 20 g 500 to 3000 Hz

Vibration, Random* —
Z, Y, & X Enclosures — 0.4 g^2/Hz 50-2000Hz
T, W & M Enclosures — 0.2 g^2/Hz 50-2000Hz

Dielectric Strength —
At Sea Level —
All circuits to ground and circuit to circuit — 1000 V rms
Coil to ground — 1000 V rms
At 80,000 Feet — 250 V rms

Insulation Resistance —
Initial (500 VDC) — 100 MΩ Min.
After Life or Environmental Tests — 50 MΩ Min.

Operate Time at Nominal Voltage — 4 ms or less

Release Time at Nominal Voltage — 4 ms or less

* Max. contact opening under vibration or shock 10 microseconds

Coil Data

Coil Code	Nominal Voltages	Freq. Hz	DC Res. (B)	Over Temperature Range		
				Pickup or Below Volts	Dropout or Above Volts	Must Hold Voltage (C)
1	6	DC	20 Ω	4.5	0.3	2.5
2	12	DC	95 Ω	9.0	0.75	4.5
3	28	DC	500 Ω	18.0	1.5	7.0
4 (A)	28	DC	500 Ω	18.0	1.5	7.0
5	48	DC	1600 Ω	36.0	2.5	14.0

A. CODE 4 COILS HAVE BACK EMF SUPPRESSION TO 42 VOLTS MAX.
B. DC COIL RESISTANCE ± 10% AT 25˚C
C. RELAY WILL STAY IN PICKED-UP STATE DOWN TO MUST HOLD VOLTAGES SHOWN.
D. MAX. OVERVOLTAGE: 6 & 12 VDC COILS 120% OF NOMINAL; ALL OTHERS 110% OF NOMINAL.

Catalog 5-1773450-5
Revised 3-13

www.te.com

Dimensions are shown for reference purposes only. Specifications subject to change.

Dimensions are in millimeters unless otherwise specified.

USA: +1 800 522 6752
Asia Pacific: +86 0 400 820 6015
UK: +44 800 267 666

For additional support numbers please visit www.te.com

FCB-205 Series, 5 Amperes, DPDT (Continued)

Below are shown the standard terminal types and the enclosures available. Specify the assembly as indicated under How To Order. Dimensions are shown in inches ± .010 and (Millimeters ± .25).

Terminals

CODE "A" — **Socket Pin Terminals**

Socket Pins Gold Plated. Polarizing pin tin/lead plated

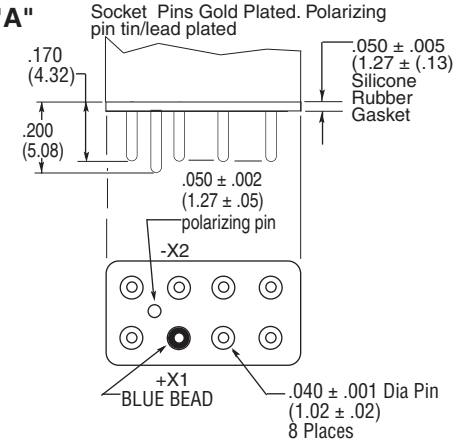

CODE "B" — **Solder Pin Terminals**

All Terminals Tin/Lead Plated

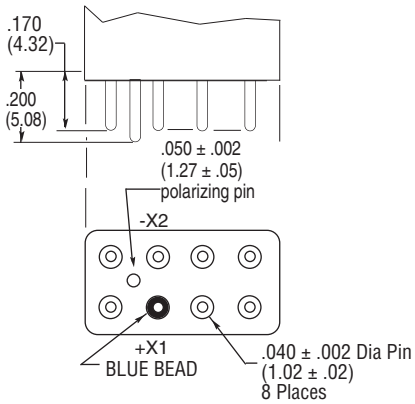

CODE "C" — **Solder Hook Terminals**

Hook Terminals Tin/Lead Plated

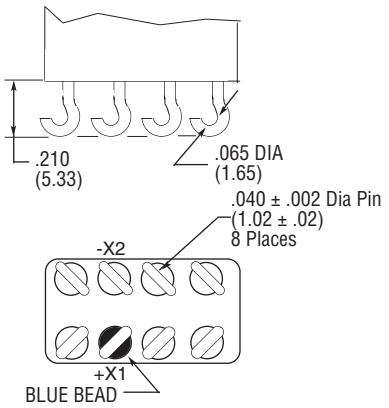

CODE "H" — **90˚ Solder Pins**

All Pins Bright Acid Tin/lead

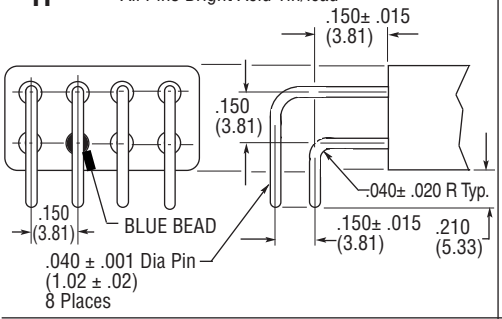

CODE "Z"

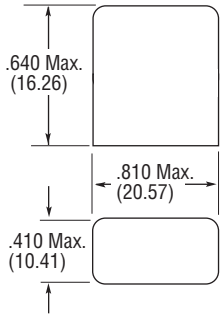

CODE "Y"

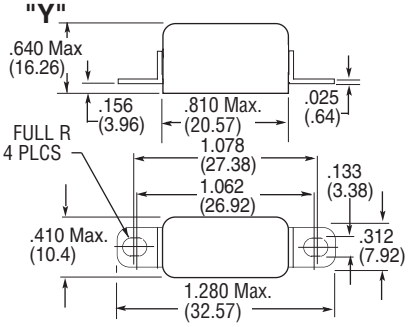

Enclosures

All Enclosures have Cupro-Nickel Cans bright acid tin/lead plated after assembly to terminal headers.

Dimensions: Inches ± .010 (mm ± .25)

Enclosure "T" is for use with track mounted sockets and requires socket pin terminals, but no gasket. The gasket is included in the socket assembly.

CODE "X"

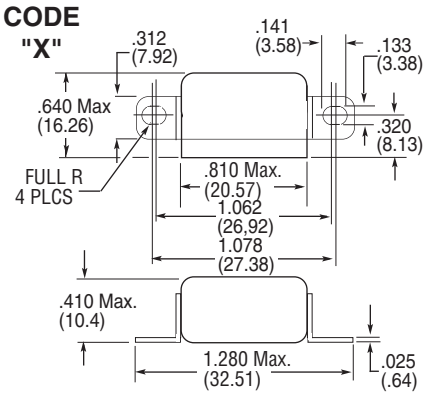

CODE "W"

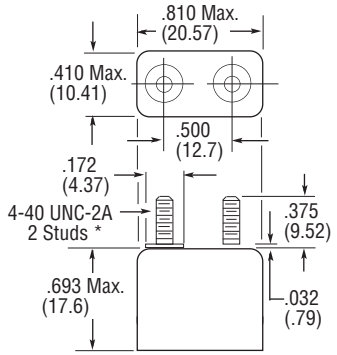

*Metric threads available,To specify use M in place of W

CODE "T"

M83536/2-028
(REFERENCE ONLY)

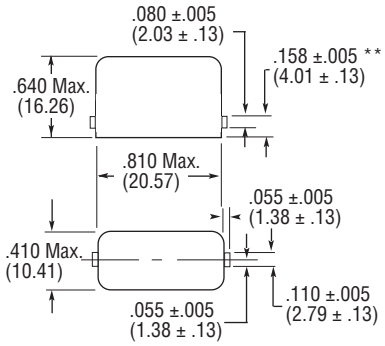

NOTE: FOR USE WITH TRACK MOUNT PER MIL-R-6106/23

** MEASURED FROM SURFACE OF HEADER

Catalog 5-1773450-5
Revised 3-13

www.te.com

Dimensions are shown for reference purposes only. Specifications subject to change.

Dimensions are in millimeters unless otherwise specified.

USA: +1 800 522 6752
Asia Pacific: +86 0 400 820 6015
UK: +44 800 267 666

For additional support numbers please visit www.te.com

FCB-205 Series, 5 Amperes, DPDT (Continued)

Terminal Wiring

DC Coils

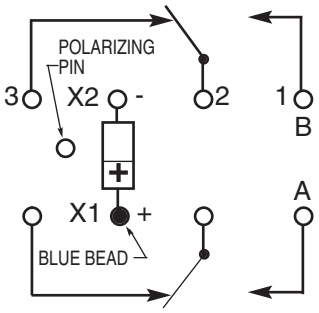

Transient Suppression

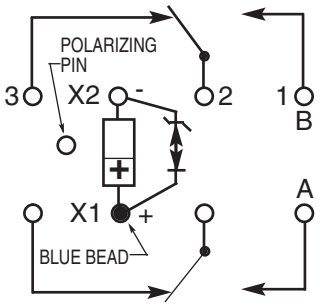

NOTE: Polarity must be observed with DC coil supply. Relay is polarized with a permanent magnet and will not operate or be damaged by reverse polarity.

Diodes used in transient suppression and in AC rectifier circuits have peak inverse voltage rating of 600 VDC minimum. Zener diodes have a minimum rating of 1 watt.

Terminal designations are for reference only and do not appear on the header.

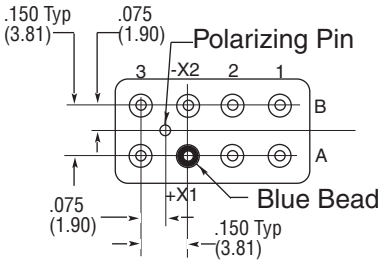

TERMINAL VIEW

HOW TO ORDER

FCB-205-A Y 4

RELAY TYPE

TERMINALS (Socket Pins)

ENCLOSURE (With Flanges)

COIL (28 VDC With Transient Suppression).

* The part number example shown on this page is for catalog items. For a list of specific QPL part numbers, please see the index in Section 15.

FCB-405 Series, 5 Amperes, 4PDT

Product Facts

- **Hermetically Sealed**
- **All Welded Construction**
- **Balanced Force**
- **Permanent Magnet Drive**
- **Contacts rated low level to 5 Amps 28 VDC and 115/200 VAC 400 Hz, 3 Phase**
- **Weight .93 ounces max. (26.4 grams)**
- **Qualified to M83536/5 & /6**

The Series FCB-405 relay is a polarized single-side stable design, where the flux from a permanent magnet provides the armature holding force in the deactivated state, and its flux path is switched and combined with the coil flux in the operated state. This results in appreciably increased contact pressure in both states over that of a spring return nonpolar design. We also manufacture other versions of this relay:

FCB-205 — 5 Amp DPDT Relay

Contact Rating — Amperes Ratings Are Continuous Duty

Type of Load	Life (Min.) Cycles x 10^3	28 VDC	115VAC 400Hz	115/200VAC 400Hz-3Ø
Resistive	100	5	5	5
Inductive	20	3	5	5
Motor	100	2	3	3
Lamp	100	1	1	1

Low Level Switching Capability: With contacts operating a load of 10 to 50 microamperes at 10 to 50 millivolts, the contact resistance miss detection level shall be 100 ohms max. Cycling rate is 1 to 12 per second, for 100,000 operations.

Overload Current — 20 AMPS DC, 30 AMPS 400Hz
Rupture Current — 25 AMPS DC, 40 AMPS 400Hz
Contact Make Bounce —1.0 MILLISECOND AT NOMINAL VOLTAGE
Max. Contact Drop at 5 Amps — INITIAL 0.100 VOLTS
End of Life — 0.125 VOLTS

General Specifications

Temperature Rating —
-70˚C TO + 125˚C

Altitude — 300,000 Feet

Shock* —
Z & Y Enclosures —
200 g for 6 mS
W, X & M Enclosures —
100 g for 6 mS
T Enclosure (In Track) —
50 g for 11 mS

Vibration, Sinusoidal* —
Z & Y Enclosures —
30 g 70-3000Hz
W, X & M Enclosures —
20 g 70-3000Hz
T Enclosure (Socket Mounted in Track) —
20 g 500-3000 Hz

Vibration, Random* —
Z & Y Enclosures —
0.4 g^2/Hz 50-2000Hz
T, W, X & M Enclosures —
0.2 g^2/Hz 50-2000Hz

Dielectric Strength —
At Sea Level —
All circuits to ground and circuit to circuit — 1000 V rms
Coil to ground — 1000 V rms
At 80,000 Feet — 250 V rms

Insulation Resistance —
Initial (500 VDC) — 100 MΩ Min.
After Life or Environmental Tests —
50 MΩ Min.

Operate Time at Nominal Voltage — 6 ms or less

Release Time at Nominal Voltage — 6 ms or less

* Max. contact opening under vibration or shock 10 microseconds

Coil Data

Coil Code	Nominal Voltages	Freq. Hz	DC Res. (B)	Over Temperature Range		
				Pickup or Below Volts	Dropout or Above Volts	Must Hold Voltage (C)
1	6	DC	25 Ω	4.5	0.3	2.5
2	12	DC	78 Ω	9.0	0.75	4.5
3	28	DC	400 Ω	18.0	1.5	7.0
4 (A)	28	DC	400 Ω	18.0	1.5	7.0
5	48	DC	1275 Ω	36.0	2.5	14.0

A. CODE 4 COILS HAVE BACK EMF SUPPRESSION TO 42 VOLTS MAX.
B. DC COIL RESISTANCE ± 10% AT 25˚C
C. RELAY WILL STAY IN PICKED-UP STATE DOWN TO MUST HOLD VOLTAGES SHOWN.
D. MAX. OVERVOLTAGE: 6 & 12 VDC COILS 120% OF NOMINAL; ALL OTHERS 110% OF NOMINAL.

Catalog 5-1773450-5
Revised 3-13

www.te.com

Dimensions are shown for reference purposes only. Specifications subject to change.

Dimensions are in millimeters unless otherwise specified.

USA: +1 800 522 6752
Asia Pacific: +86 0 400 820 6015
UK: +44 800 267 666

For additional support numbers please visit www.te.com

FCB-405 Series, 5 Amperes, 4PDT (Continued)

Below are shown the standard terminal types and the enclosures available. Specify the assembly as indicated under How To Order. Dimensions are shown in inches ± .010 and (Millimeters ± .25).

Terminals

CODE "A"

Socket Pins - All DC Coils

PIN TERMINALS ARE GOLD PLATED

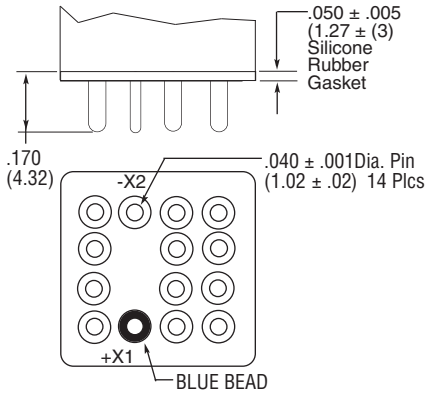

CODE "B"

Solder Pin Terminals

PIN TERMINALS TIN/LEAD PLATED

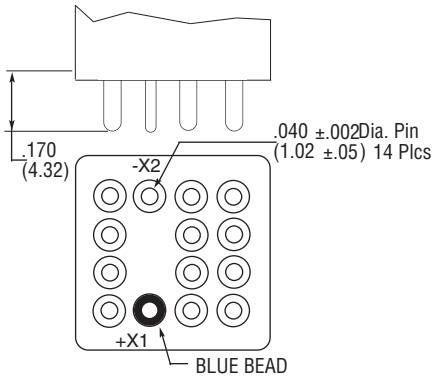

CODE "C"

Solder Hook Terminals

HOOK TERMINALS TIN/LEAD PLATED

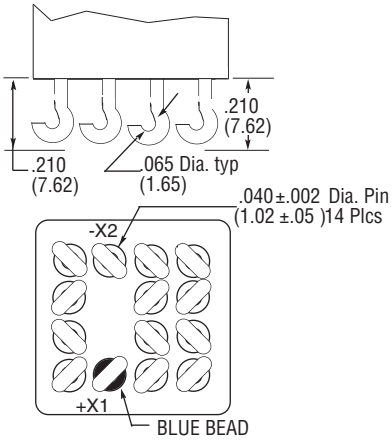

CODE "T"

M83536/6-025
(REFERENCE ONLY)

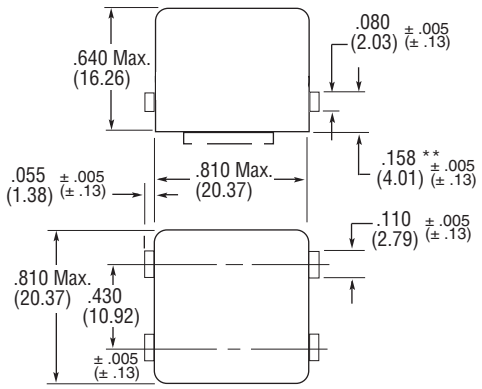

** Measured from surface of header

Enclosures

All Enclosures have cupro-Nickel cans bright acid tin/lead plated after assembly to terminal headers.

Dimensions: Inches ± .010 (mm ± .25)

Code "T" used only with track-mounted Sockets. Requires code "A" pin terminals. Gasket is included in the socket assembly.

CODE "Z"

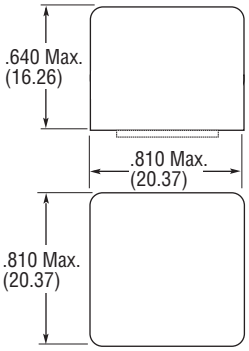

CODE "X"

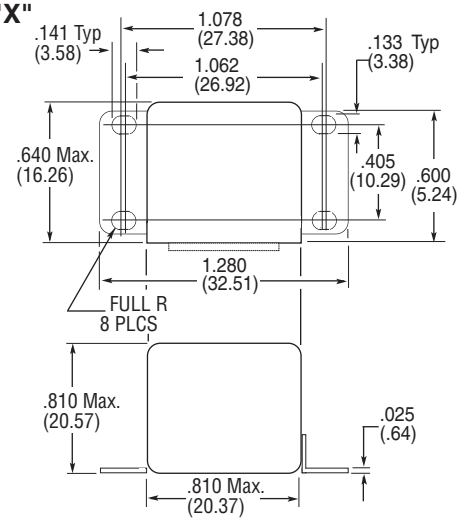

CODE "Y"

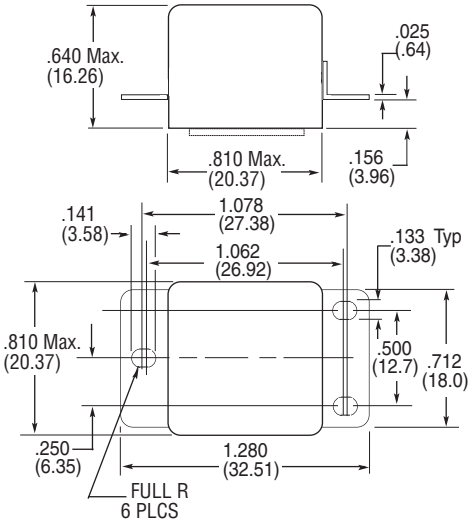

CODE "W"

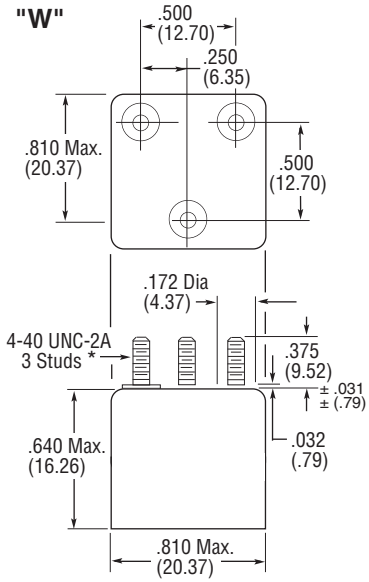

Catalog 5-1773450-5
Revised 3-13

www.te.com

Dimensions are shown for reference purposes only. Specifications subject to change.

Dimensions are in millimeters unless otherwise specified.

USA: +1 800 522 6752
Asia Pacific: +86 0 400 820 6015
UK: +44 800 267 666

For additional support numbers please visit www.te.com

FCB-405 Series, 5 Amperes, 4PDT (Continued)

Terminal Wiring

DC Coils

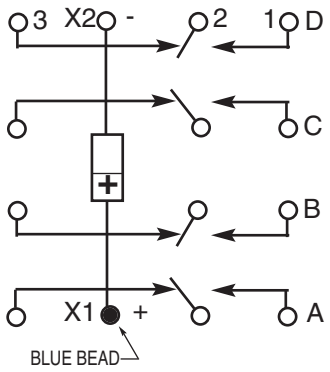

DC Coils with Transient Suppression

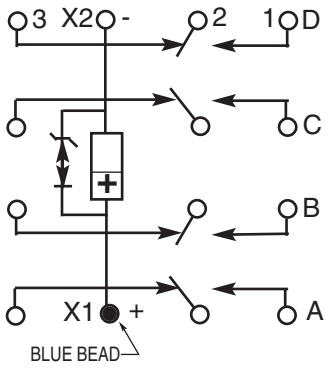

NOTE: Polarity must be observed with DC coil supply. Relay is polarized with a permanent magnet and will not operate or be damaged by reverse polarity.

Diodes used in transient suppression and in AC rectifier circuits have peak inverse voltage rating of 600 VDC minimum. Zener diodes have a minimum rating of 1 watt.

Terminal designations are for reference only and do not appear on the header.

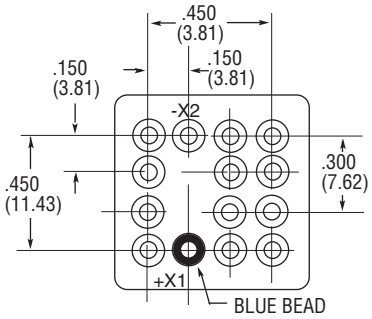

TERMINAL VIEW

HOW TO ORDER

FCB-405-A Y 4

RELAY TYPE

TERMINALS (Socket Pins)

ENCLOSURE (With Flanges)

COIL (28 VDC With Transient Suppression).

* The part number example shown on this page is for catalog items. For a list of specific QPL part numbers, please see the index in Section 15.

Catalog 5-1773450-5
Revised 3-13

www.te.com

Dimensions are shown for reference purposes only. Specifications subject to change.

Dimensions are in millimeters unless otherwise specified.

USA: +1 800 522 6752
Asia Pacific: +86 0 400 820 6015
UK: +44 800 267 666

For additional support numbers please visit www.te.com

FCA-210 Series, 10 Amperes, DPDT

Product Facts

- **Hermetically Sealed**
- **All Welded Construction**
- **Balanced Force**
- **Permanent Magnet Drive**
- **Contacts — Silver Cadmium Oxide with Gold Plating**
- **Coils for DC, 50 to 400Hz and 400Hz AC**
- **Weight 1.6 ounces max. (45.4 grams)**
- **Qualified to M83536/9, /10**

The Series FCA-210 relay is a polarized single-side stable design, where the flux from a permanent magnet provides the armature holding force in the deactivated state, and its flux path is switched and combined with the coil flux in the operated state. This results in appreciably increased contact pressure in both states over that of a spring return nonpolar design. We also manufacture other versions of this relay:

FCA-410 — 10 Ampere 4PDT Relay

FCA-610 — 10 Ampere 6 PDT Relay

Available:

FCA-215 — 15 Ampere DPDT Relay, Has the same specifications as the FCA-210 except is rated at 15 amps. (Commercial Only)

Contact Rating — Amperes
Ratings Are Continuous Duty

Type of Load	Life (Min.) Cycles x 10^3	28 VDC	115VAC 400Hz	115/200VAC 3Ø	
				400Hz	60Hz*
Resistive	100	10	10	10	2.5
Inductive	20	8	8	8	2.5
Motor	100	4	4	4	2.0
Lamp	100	2	2	2	1

*60 Hz loads rated for 10,000 operations

Overload Current — 40 AMPS DC, 60 AMPS 400Hz
Rupture Current — 50 AMPS DC, 80 AMPS 400Hz
Contact Make Bounce —1 MILLISECOND AT NOMINAL VOLTAGE
Max. Contact Drop at 10 Amps — INITIAL 0.100 VOLTS
End of Life — 0.125 VOLTS

General Specifications

Temperature Rating —
-70˚C TO + 125˚C

Altitude — 300,000 Feet

Shock* —
Z, Y, & X Enclosures —
200 g for 6 mS
W & M Enclosures (Stud Mtg.) —
100 g for 6 mS

Vibration, Sinusoidal* —
Z, Y, & X Enclosures —
30 g 33-3000Hz
W & M Enclosures (Stud Mtg.) —
20 g 33-3000Hz

Vibration, Random* —
Z, Y, & X Enclosures —
0.4 g^2/Hz 50-2000Hz
W & M Enclosures (Stud Mtg.) —
0.2 g^2/Hz 50-2000Hz

Dielectric Strength —
At Sea Level —
All circuits to ground and circuit to circuit — 1250 V rms
Coil to ground — 1000 V rms
At 80,000 Feet — 350 V rms

Insulation Resistance —
Initial (500 VDC) — 100 MΩ Min.
After Life or Environmental Tests —
50 MΩ Min.

Operate Time at Nominal Voltage —
DC Relays — 10 ms or less
AC Relays — 15 ms or less

Release Time at Nominal Voltage —
DC Relays — 10 ms or less
AC Relays — 50 ms or less

* Max. contact opening under vibration or shock 10 microseconds

Coil Data

Coil Code	Nominal Voltages	Freq. Hz	DC Res. AC Amps (B)	Over Temperature Range		
				Pickup or Below Volts	Dropout or Above Volts	Must Hold Voltage (C)
1	6	DC	20 Ω	4.5	0.3	2.5
2	12	DC	80 Ω	9.0	0.75	4.5
3	28	DC	320 Ω	18.0	1.5	7.0
4 (A)	28	DC	320 Ω	18.0	1.5	7.0
5	48	DC	920 Ω	32.0	2.5	14.0
6	28	400Hz	180 mA	22.0	1.25	10.0
7	28	50/400Hz	100 mA	22.0	1.25	10.0
8	115	400 Hz	40 mA	90.0	5.0	40.0
9	115	50/400 Hz	30 mA	95.0	5.0	40.0

A. CODE 4 COILS HAVE BACK EMF SUPPRESSION TO 42 VOLTS MAX.
B. DC COIL RESISTANCE ± 10% AT 25˚C; AC COIL MAX. CURRENT AT NOMINAL VOLTAGE.
C. RELAY WILL STAY IN PICKED-UP STATE DOWN TO MUST HOLD VOLTAGES SHOWN.
D. MAX. OVERVOLTAGE: 6 & 12 VDC COILS 120% OF NOMINAL; ALL OTHERS 110% OF NOMINAL.
E. COILS AVAILABLE FOR OTHER VOLTAGES AND FOR AC 50/60HZ.

NOTE: Only DC Coil Models are QPL Approved.

Catalog 5-1773450-5
Revised 3-13

www.te.com

Dimensions are shown for reference purposes only. Specifications subject to change.

Dimensions are in millimeters unless otherwise specified.

USA: +1 800 522 6752
Asia Pacific: +86 0 400 820 6015
UK: +44 800 267 666

For additional support numbers please visit www.te.com

FCA-210 Series, 10 Amperes, DPDT (Continued)

Below are shown the standard terminal types and the enclosures available. Specify the assembly as indicated under How To Order. Dimensions are shown in inches ± .010 and (Millimeters ± .25).

Terminals

SOCKET PINS ARE GOLD PLATED
POLARIZING PINS ARE TIN/LEAD PLATED
CIRCUIT BOARD PINS ARE TIN/LEAD PLATED
DIMENSIONS EXCEPT AS NOTED:
INCHES ± .010 (MILLIMETERS ± .25)

CODE "A" **Socket Pins - All DC Coils**

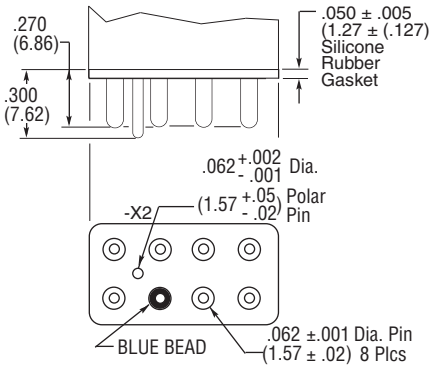

CODE "B" **Circuit Board Pins - All DC Coils**

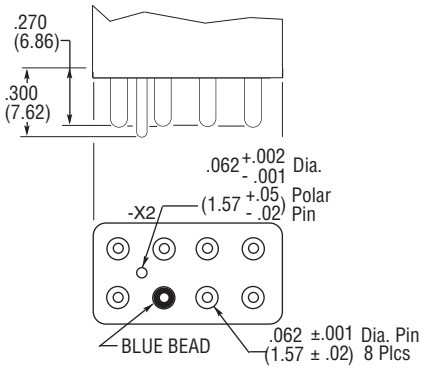

CODE "C" **Solder Hook Terminals**

HOOK TERMINALS TIN/LEAD PLATED

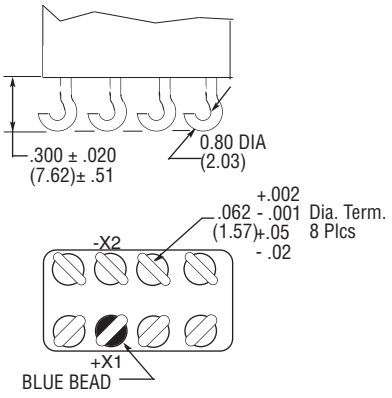

CODE "D" **Socket Pins 115 VAC**

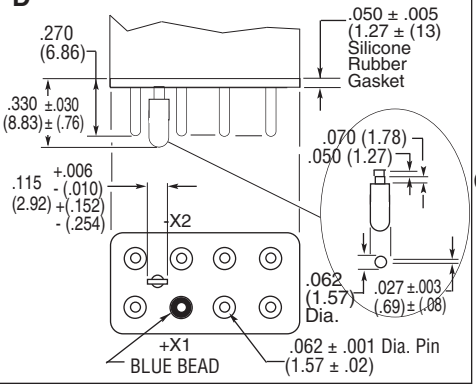

CODE "E" **Socket Pins 28 VAC Coils**

Same as Code "D" Except polarizing Pin turned 90˚ to this plane.

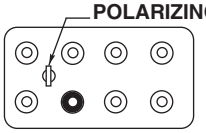

CODE "F" **Circuit Board Pins 115 VAC Coils**

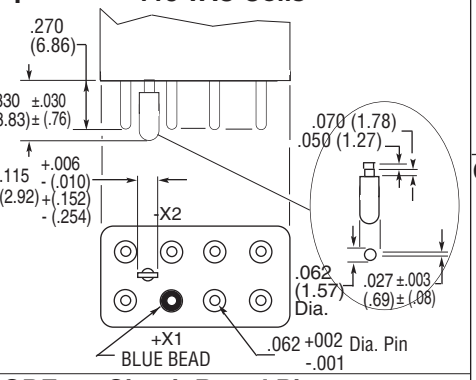

CODE "G" **Circuit Board Pins 28 VAC Coils**

Same as Code "F" Except polarizing Pin turned 90˚ to this plane.

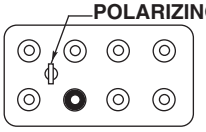

CODE "H" **90˚ Solder Pins**

All Pins Bright Acid Tin/lead

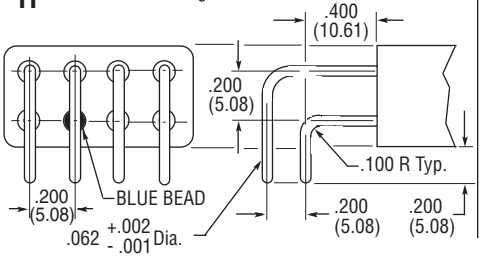

Enclosures

All Enclosures have Cupro-Nickel Cans bright acid tin/lead plated after assembly to terminal headers.

Dimensions: Inches ± .010 (mm ± .25)

"A" AC Coils 1.125 in. (28.57) Max.
DC Coils 1.010 in. (25.65) Max.

CODE "Z"

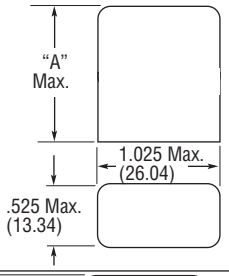

CODE "Y"

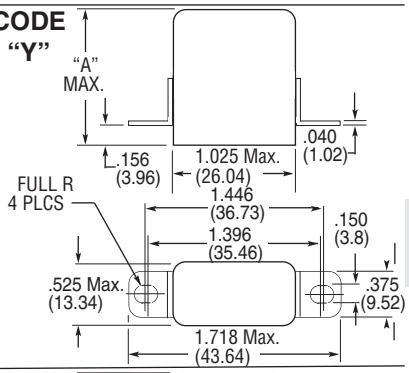

CODE "X"

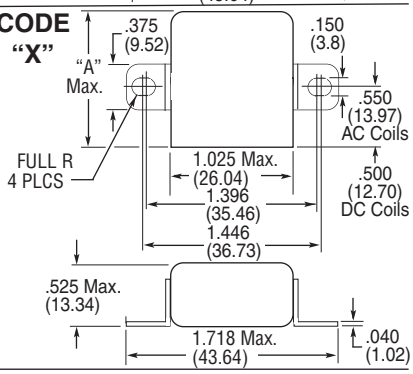

CODE "W"

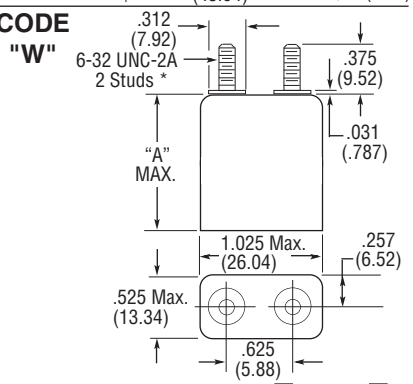

*Metric threads available,To specify use M in place of W

Dimensions are shown for reference purposes only. Specifications subject to change.

Dimensions are in millimeters unless otherwise specified.

USA: +1 800 522 6752
Asia Pacific: +86 0 400 820 6015
UK: +44 800 267 666

For additional support numbers please visit www.te.com

FCA-210 Series, 10 Amperes, DPDT (Continued)

Terminal Wiring

DC Coils with Transient Suppression | **DC Coils** | **AC Coils 115 VAC** | **AC Coils 28 VAC**

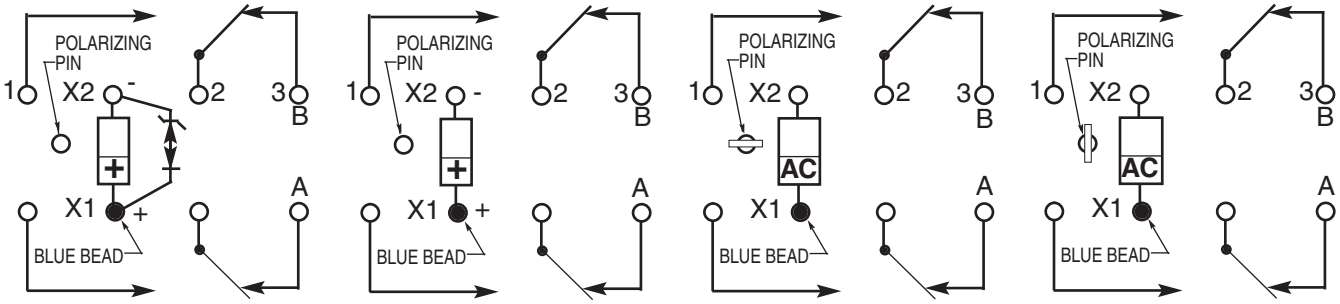

NOTE: Polarity must be observed with DC coil supply. Relay is polarized with a permanent magnet and will not operate or be damaged by reverse polarity.

Diodes used in transient suppression and in AC rectifier circuits have peak inverse voltage rating of 600 VDC minimum. Zener diodes have a minimum rating of 1 watt.

Terminal designations are for reference only and do not appear on the header.

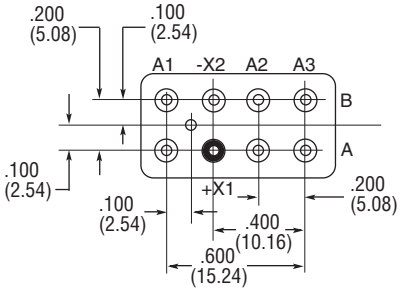

TERMINAL VIEW

HOW TO ORDER

FCA-215-
FCA-210-A Y 4

RELAY TYPE

TERMINALS (Socket Pins, DC Coil)

ENCLOSURE (With Flanges)

COIL (28 VDC With Transient Suppression).

NOTE: Only DC coil models are QPL Approved

* The part number example shown on this page is for catalog items. For a list of specific QPL part numbers, please see the index in Section 15.

Catalog 5-1773450-5
Revised 3-13

www.te.com

Dimensions are shown for reference purposes only. Specifications subject to change.

Dimensions are in millimeters unless otherwise specified.

USA: +1 800 522 6752
Asia Pacific: +86 0 400 820 6015
UK: +44 800 267 666

For additional support numbers please visit www.te.com

FCA-212 Series, 12 Amperes, DPDT

Product Facts

- **Hermetically Sealed**
- **All Welded Construction**
- **Balanced Force**
- **Permanent Magnet Drive**
- **Contacts — Silver Cadmium Oxide with Gold Plating**
- **Coils for DC, 50 to 400Hz and 400Hz AC**
- **Weight 1.6 ounces max. (45.4 grams)**

The Series FCA-212 relay is a polarized single-side stable design, where the flux from a permanent magnet provides the armature holding force in the deactivated state, and its flux path is switched and combined with the coil flux in the operated state. This results in appreciably increased contact pressure in both states over that of a spring return nonpolar design. We also manufacture other versions of this relay:

FCA-412 — 12 Amp 4PDT Relay

Contact Rating — Amperes Ratings Are Continuous Duty

Type of Load	Life (Min.) Cycles x 10^3	28 VDC	115VAC 400Hz	115/200VAC 3Ø	
				400Hz	60Hz*
Resistive	100	12	12	12	2.5
Inductive	20	8	8	8	2.5
Motor	100	4	4	4	2.0
Lamp	100	2	2	2	1

*60 Hz loads rated for 10,000 operations

Overload Current — 40 AMPS DC, 60 AMPS 400Hz
Rupture Current — 50 AMPS DC, 80 AMPS 400Hz
Contact Make Bounce —1 MILLISECOND AT NOMINAL VOLTAGE
Max. Contact Drop at 12 Amps — INITIAL 0.150 VOLTS
End of Life — 0.175 VOLTS

General Specifications

Temperature Rating —
-70˚C TO + 125˚C

Altitude — 300,000 Feet

Shock* —
Z, Y, & X Enclosures —
200 g for 6 mS
W & M Enclosures (Stud Mtg.) —
100 g for 6 mS

Vibration, Sinusoidal* —
Z, Y, & X Enclosures —
30 g 33-3000Hz
W Enclosure —
20 g 33-3000Hz

Vibration, Random* —
Z, Y, & X Enclosures —
0.4 g^2/Hz 50-2000Hz
W & M Enclosures (Stud Mtg.) —
0.2 g^2/Hz 50-2000Hz

Dielectric Strength —
At Sea Level —
All circuits to ground and circuit to circuit — 1250 V rms
Coil to ground — 1000 V rms
At 80,000 Feet — 350 V rms

Insulation Resistance —
Initial (500 VDC) — 100 MΩ Min.
After Life or Environmental Tests —
50 MΩ Min.

Operate Time at Nominal Voltage —
DC Relays — 10 ms or less
AC Relays — 15 ms or less

Release Time at Nominal Voltage —
DC Relays — 10 ms or less
AC Relays — 50 ms or less

* Max. contact opening under vibration or shock 10 microseconds

Coil Data

Coil Code	Nominal Voltages	Freq. Hz	DC Res. AC Amps (B)	Over Temperature Range		
				Pickup or Below Volts	Dropout or Above Volts	Must Hold Voltage (C)
1	6	DC	20 Ω	4.5	0.3	2.5
2	12	DC	80 Ω	9.0	0.75	4.5
3	28	DC	320 Ω	18.0	1.5	7.0
4 (A)	28	DC	320 Ω	18.0	1.5	7.0
5	48	DC	920 Ω	32.0	2.5	14.0
6	28	400Hz	180 mA	22.0	1.25	10.0
7	28	50/400Hz	100 mA	22.0	1.25	10.0
8	115	400 Hz	40 mA	90.0	5.0	40.0
9	115	50/400 Hz	30 mA	95.0	5.0	40.0

A. CODE 4 COILS HAVE BACK EMF SUPPRESSION TO 42 VOLTS MAX.
B. DC COIL RESISTANCE ± 10% AT 25˚C; AC COIL MAX. CURRENT AT NOMINAL VOLTAGE.
C. RELAY WILL STAY IN PICKED-UP STATE DOWN TO MUST HOLD VOLTAGES SHOWN.
D. MAX. OVERVOLTAGE: 6 & 12 VDC COILS 120% OF NOMINAL; ALL OTHERS 110% OF NOMINAL.
E. COILS AVAILABLE FOR OTHER VOLTAGES AND FOR AC 50/60HZ.

Catalog 5-1773450-5
Revised 3-13

www.te.com

Dimensions are shown for reference purposes only. Specifications subject to change.

Dimensions are in millimeters unless otherwise specified.

USA: +1 800 522 6752
Asia Pacific: +86 0 400 820 6015
UK: +44 800 267 666

For additional support numbers please visit www.te.com

FCA-212 Series, 12 Amperes, DPDT (Continued)

Below are shown the standard terminal types and the enclosures available. Specify the assembly as indicated under How To Order. Dimensions are shown in inches ± .010 and (Millimeters ± .25).

Terminals

SOCKET PINS ARE GOLD PLATED
POLARIZING PINS ARE TIN/LEAD PLATED
CIRCUIT BOARD PINS ARE TIN/LEAD PLATED
DIMENSIONS EXCEPT AS NOTED:
INCHES ± .010 (MILLIMETERS ± .25)

CODE "A" **Socket Pins - All DC Coils**

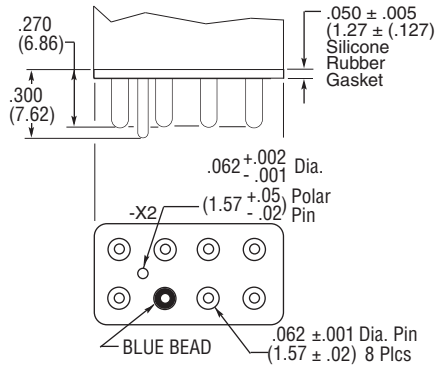

CODE "B" **Circuit Board Pins - All DC Coils**

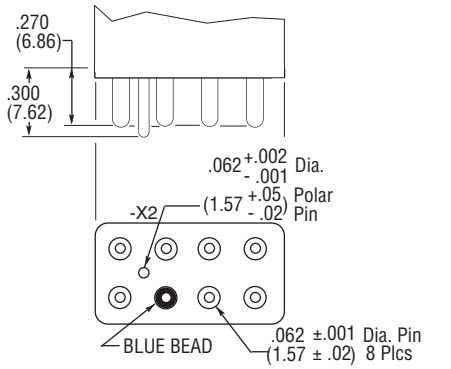

CODE "C" **Solder Hook Terminals**

HOOK TERMINALS TIN/LEAD PLATED

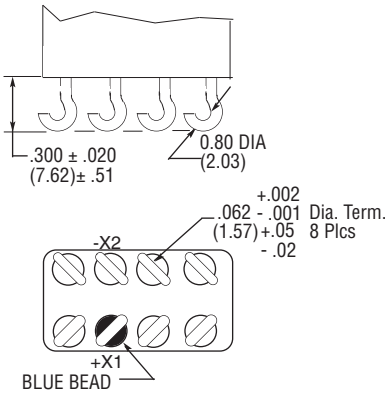

CODE "D" **Socket Pins 115 VAC**

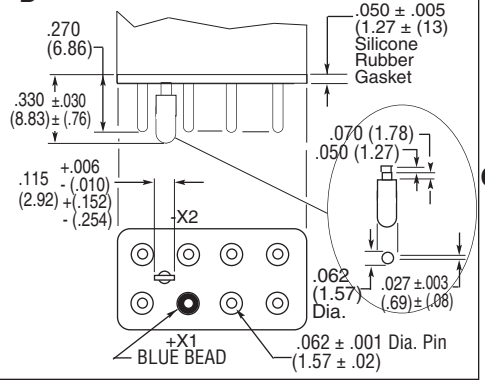

CODE "E" **Socket Pins 28 VAC Coils**

Same as Code "D" Except polarizing Pin turned 90˚ to this plane.

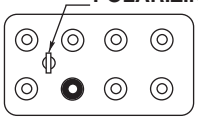

CODE "F" **Circuit Board Pins 115 VAC Coils**

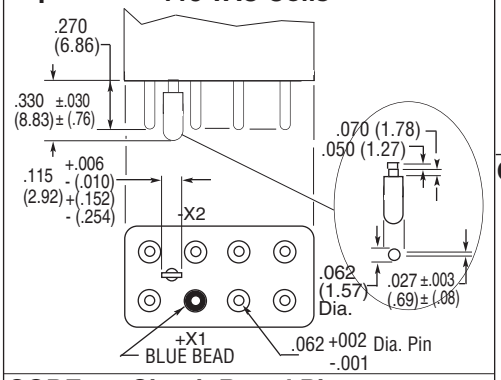

CODE "G" **Circuit Board Pins 28 VAC Coils**

Same as Code "F" Except polarizing Pin turned 90˚ to this plane.

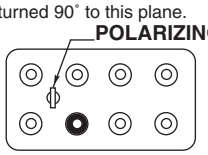

CODE "H" **90˚ Solder Pins**

All Pins Bright Acid Tin/lead

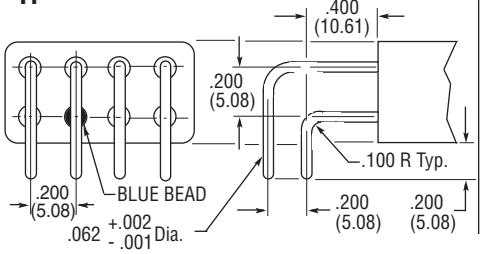

Enclosures

All Enclosures have Cupro-Nickel Cans bright acid tin/lead plated after assembly to terminal headers.

Dimensions: Inches ± .010 (mm ± .25)

"A" AC Coils 1.125 in. (28.57) Max.
DC Coils 1.010 in. (25.65) Max.

CODE "Z"

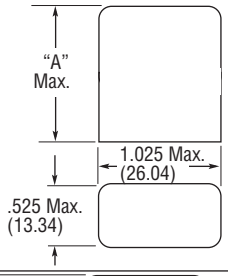

CODE "Y"

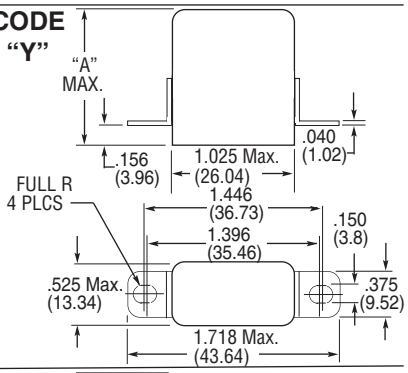

CODE "X"

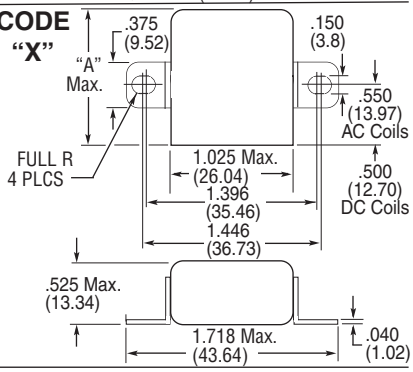

CODE "W"

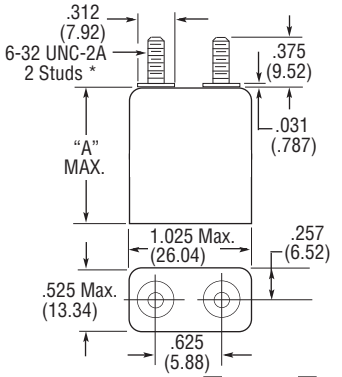

*Metric threads available,To specify use M in place of W

Catalog 5-1773450-5
Revised 3-13

www.te.com

Dimensions are shown for reference purposes only. Specifications subject to change.

Dimensions are in millimeters unless otherwise specified.

USA: +1 800 522 6752
Asia Pacific: +86 0 400 820 6015
UK: +44 800 267 666

For additional support numbers please visit www.te.com

FCA-212 Series, 12 Amperes, DPDT (Continued)

Terminal Wiring

DC Coils with Transient Suppression | **DC Coils** | **AC Coils 115 VAC** | **AC Coils 28 VAC**

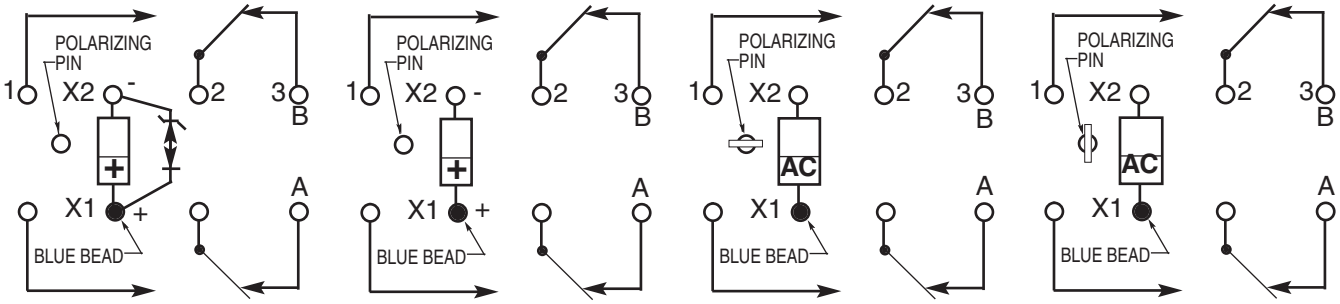

NOTE: Polarity must be observed with DC coil supply. Relay is polarized with a permanent magnet and will not operate or be damaged by reverse polarity.

Diodes used in transient suppression and in AC rectifier circuits have peak inverse voltage rating of 600 VDC minimum. Zener diodes have a minimum rating of 1 watt.

Terminal designations are for reference only and do not appear on the header.

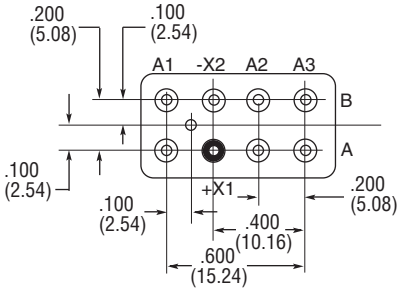

TERMINAL VIEW

HOW TO ORDER

FCA-212-A Y 4

RELAY TYPE

TERMINALS (Socket Pins, DC Coil)

ENCLOSURE (With Flanges)

COIL (28 VDC With Transient Suppression).

Catalog 5-1773450-5
Revised 3-13

www.te.com

Dimensions are shown for reference purposes only. Specifications subject to change.

Dimensions are in millimeters unless otherwise specified.

USA: +1 800 522 6752
Asia Pacific: +86 0 400 820 6015
UK: +44 800 267 666

For additional support numbers please visit www.te.com

FCA-410 Series, 10 Amperes, 4PDT

Product Facts

- **Hermetically Sealed**
- **All Welded Construction**
- **Balanced Force**
- **Permanent Magnet Drive**
- **4PDT switching in one inch cube**
- **Contacts — Silver Cadmium Oxide with Gold Plating**
- **Coils for DC and AC 50 to 400Hz or 400Hz**
- **Weight 2.72 ounces max. (77 grams max.)**
- **Qualified to M83536/15, /16**

The Series FCA-410 relay is a polarized single-side stable design, where the flux from a permanent magnet provides the armature holding force in the deactivated state, and its flux path is switched and combined with the coil flux in the operated state. This results in appreciably increased contact pressure in both states over that of a spring return nonpolar design. We also manufacture 2-pole and 6-pole versions of this relay.

FCA-210 — 10 Amp DPDT Relay

FCA-610 — 10 Amp 6PDT Relay

Available

FCA-415 — 15 Amp 4PDT, Has the same specifications as the FCA-410 except is rated at 15 amps. (Commercial Only)

Contact Rating — Amperes
Ratings Are Continuous Duty

Type of Load	Life (Min.) Cycles x 10^3	28 VDC	120VAC 400Hz	120/200VAC	
				400Hz-3Ø	60Hz-3Ø*
Resistive	100	10	10	10	2.5
Inductive	20	8	8	8	2.5
Motor	100	4	4	4	2.0
Lamp	100	2	2	2	1.0

*60 Hz loads rated for 10,000 operations

Overload Current — 40 AMPS DC, 60 AMPS 400Hz

Rupture Current — 50 AMPS DC, 80 AMPS 400Hz

Contact Make Bounce —1 MILLISECOND AT NOMINAL VOLTAGE

Max. Contact Drop at 10 Amps — INITIAL 0.100 VOLTS

End of Life — 0.125 VOLTS

General Specifications

Temperature Rating —
-70˚C TO + 125˚C

Altitude — 300,000 Feet

Shock* —
Z & Y Enclosures —
200 g for 6 mS
W, X & M Enclosures —
100 g for 6 mS

Vibration, Sinusoidal* —
Z & Y Enclosures —
0.12 DA 10 to 70Hz
30 g 70 to 3000Hz
W, X & M Enclosures —
0.12 DA 10 to 57Hz
20 g 57 to 3000Hz

Vibration, Random* —
Z & Y Enclosures —
0.4 g^2/Hz 50-2000Hz
W, X & M Enclosures —
0.2 g^2/Hz 50-2000Hz

Dielectric Strength —
At Sea Level —
All circuits to ground and circuit to circuit — 1250 V rms
Coil to ground — 1000 V rms
At 80,000 Feet — 350 V rms

Insulation Resistance —
Initial (500 VDC) — 100 MΩ Min.
After Life or Environmental Tests — 50 MΩ Min.

Operate Time at Nominal Voltage —
DC Relays — 15 ms or less
AC Relays — 20 ms or less

Release Time at Nominal Voltage —
DC Relays — 15 ms or less
AC Relays — 50 ms or less

* Max. contact opening under vibration or shock 10 microseconds

Coil Data

Coil Code	Nominal Voltages	Freq. Hz	DC Res. AC Amps (B)	Over Temperature Range		
				Pickup or Below Volts	Dropout or Above Volts	Must Hold Voltage (C)
1	6	DC	18 Ω	4.5	0.3	2.5
2	12	DC	70 Ω	9.0	0.75	4.5
3	28	DC	290 Ω	18.0	1.5	7.0
4 (A)	28	DC	290 Ω	18.0	1.5	7.0
5	48	DC	865 Ω	32.0	2.5	14.0
6	28	400Hz	225 mA	22.0	1.25	10.0
7	28	50/400Hz	120 mA	22.0	1.25	10.0
8	115	400 Hz	40 mA	90.0	5.0	40.0
9	115	50/400 Hz	30 mA	95.0	5.0	40.0

A. CODE 4 COILS HAVE BACK EMF SUPPRESSION TO 42 VOLTS MAX.
B. DC COIL RESISTANCE ± 10% AT 25˚C; AC COIL MAX. CURRENT AT NOMINAL VOLTAGE.
C. RELAY WILL STAY IN PICKED-UP STATE DOWN TO MUST HOLD VOLTAGES SHOWN.
D. MAX. OVER-VOLTAGE: 6 & 12 VDC COILS 120% OF NOMINAL; ALL OTHERS 110% OF NOMINAL.
E. COILS AVAILABLE FOR OTHER VOLTAGES AND FOR AC 50/60HZ.

NOTE: Only DC Coil Models are QPL Approved.

Catalog 5-1773450-5
Revised 3-13

www.te.com

Dimensions are shown for reference purposes only. Specifications subject to change.

Dimensions are in millimeters unless otherwise specified.

USA: +1 800 522 6752
Asia Pacific: +86 0 400 820 6015
UK: +44 800 267 666

For additional support numbers please visit www.te.com

FCA-410 Series, 10 Amperes, 4PDT (Continued)

Below are shown the standard terminal types and the enclosures available. Note that the pin configuration for coil connections is determined by the coil supply voltage. Specify the assembly as indicated under How To Order. Dimensions are shown in inches ± .010 and (Millimeters ± .25) except as noted.

Terminals

Terminals on 0.200 centers.
Coil terminals: X1-X2.
Socket Pins are Gold Plated.
Circuit Board Pins are Tin/Lead Plated.

CODE "A"
Socket Pins-All DC Coils

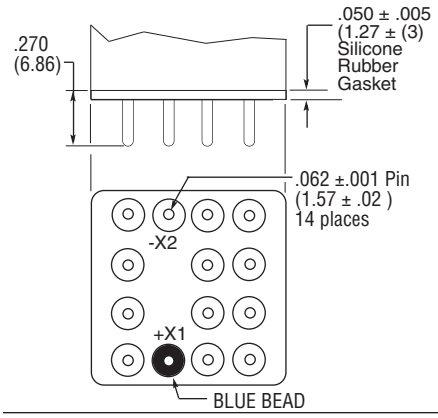

CODE "D"
Socket Pins-115 VAC Coils

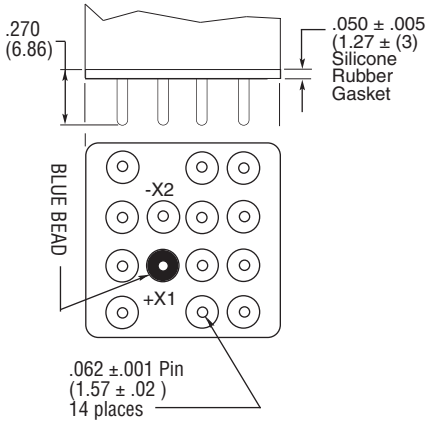

CODE "B"
Circuit Board Pins-All DC Coils

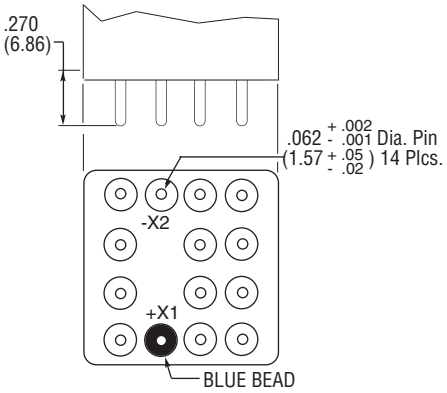

SEE NEXT PAGE

FOR MORE COIL

TERMINAL OPTIONS

CODE "C"
Solder Hooks-AC or DC Coils

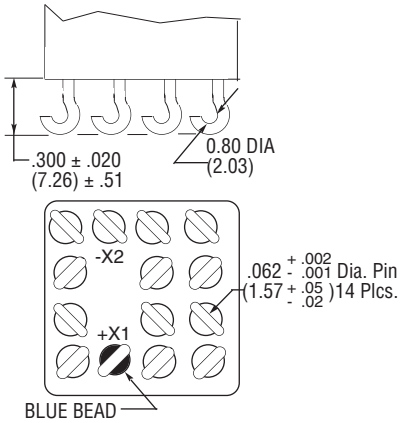

CODE "X"

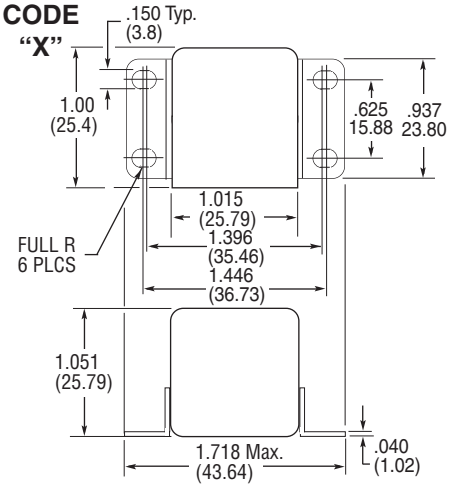

Enclosures

All Enclosures have cupro-Nickel cans bright acid tin/lead plated after assembly to terminal headers.

CODE "Z"

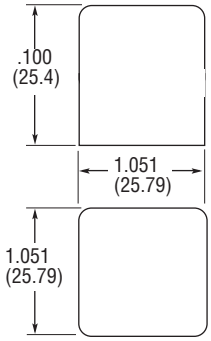

CODE "Y"

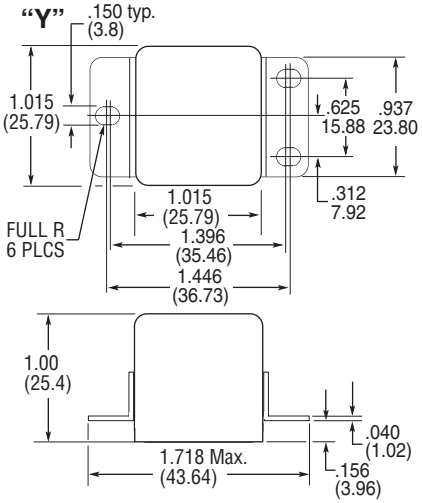

CODE "W"

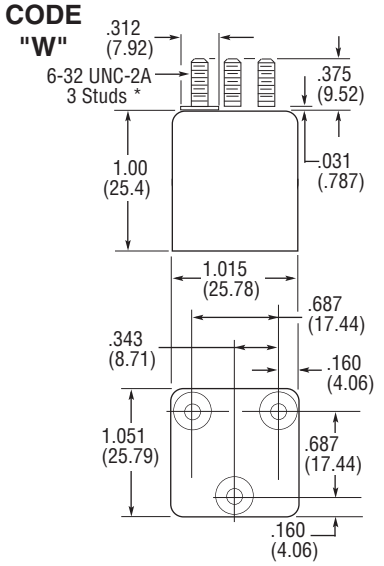

*Metric threads available,To specify use M in place of W

Catalog 5-1773450-5
Revised 3-13

www.te.com

Dimensions are shown for reference purposes only. Specifications subject to change.

Dimensions are in millimeters unless otherwise specified.

USA: +1 800 522 6752
Asia Pacific: +86 0 400 820 6015
UK: +44 800 267 666

For additional support numbers please visit www.te.com

FCA-410 Series, 10 Amperes, 4PDT (Continued)

Terminals (Continued)

CODE "E"
Socket Pins- 28 VAC Coils

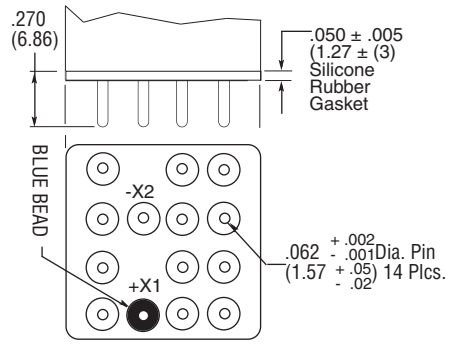

CODE "F"
Circuit Board Pins-115 VAC Coils

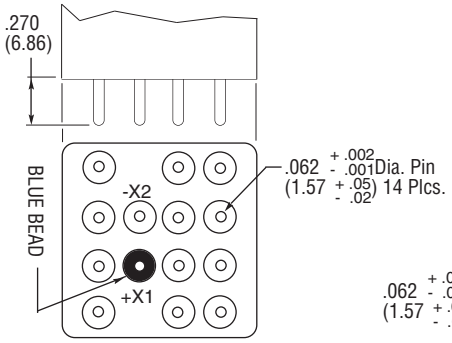

CODE "G"
Circuit Board Pins- 28 VAC Coils

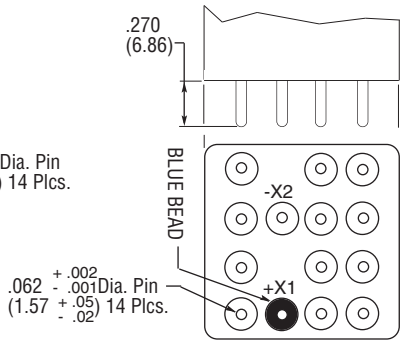

Terminal Wiring

A & B Pin Terminal
All DC Coils

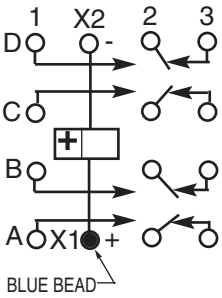

C Hook Terminal
All AC & DC Coils

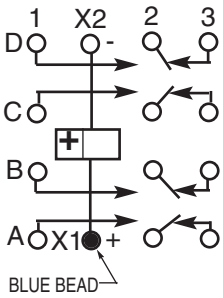

Transient Suppression
Cir.

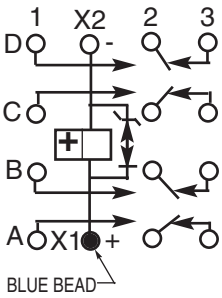

D & F Pin Terminal
115 VAC Coils

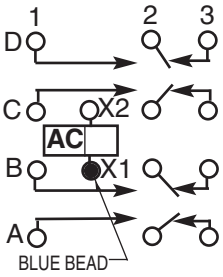

E & G Pin Terminal
28 VAC Coils

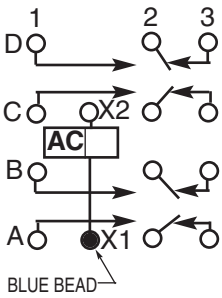

NOTE: Polarity must be observed with DC coil supply. Relay is polarized with a permanent magnet and will not operate or be damaged by reverse polarity.

Diodes used in transient suppression and in AC rectifier circuits have peak inverse voltage rating of 600 VDC minimum. Zener diodes have a minimum rating of 1 watt.

Terminal designations are for reference only and do not appear on the header.

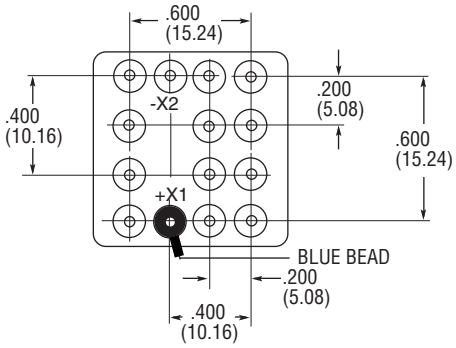

TERMINAL VIEW

HOW TO ORDER

FCA-415-
FCA-410 A Y 4

RELAY TYPE

TERMINALS (Socket Pins)

ENCLOSURE (With Flanges)

COIL (28 VDC With Transient Suppression).
NOTE: Only DC coil models are QPL Approved

* The part number example shown on this page is for catalog items. For a list of specific QPL part numbers, please see the index in Section 15.

Catalog 5-1773450-5
Revised 3-13

www.te.com

Dimensions are shown for reference purposes only. Specifications subject to change.

Dimensions are in millimeters unless otherwise specified.

USA: +1 800 522 6752
Asia Pacific: +86 0 400 820 6015
UK: +44 800 267 666

For additional support numbers please visit www.te.com

FCA-125 Series, 25 Amperes, SPDT

Product Facts

- **Hermetically Sealed**
- **All Welded Construction**
- **Balanced Force**
- **Permanent Magnet Drive**
- **Contacts — Silver Cadmium Oxide with Gold Plating**
- **Coils for DC, 50 to 400Hz and 400Hz AC**
- **Weight 1.6 ounces max. (45.4 grams)**
- **Qualified to M6106/19, M83536/36, /37**

The Series FCA-125 relay is a polarized single-side stable design, where the flux from a permanent magnet provides the armature holding force in the deactivated state, and its flux path is switched and combined with the coil flux in the operated state.

This results in appreciably increased contact pressure in both states over that of a spring return nonpolar design. We also manufacture other versions of this relay:

FCA-325 — 25 Ampere 3PDT Relay

FCAC-325 — 25 Ampere 3PST-NO Relay with 2 amp SPDT auxiliary

Contact Rating — Amperes Ratings Are Continuous Duty

Type of Load	Life (Min.) Cycles x 10^3	28 VDC	115VAC 400Hz	115VAC 60Hz*
Resistive	50	25	25	10
Inductive	10	12	—	10
Inductive	20	—	15	—
Motor	50	10	10	8
Lamp	50	5	5	—

*60 Hz loads rated for 10,000 operations

Overload Current — 50 AMPS DC, 80 AMPS 400Hz
Rupture Current — 60 AMPS DC, 100 AMPS 400Hz
Contact Make Bounce —1 MILLISECOND AT NOMINAL VOLTAGE
Max. Contact Drop at 25 Amps — INITIAL 0.150 VOLTS
End of Life — 0.175 VOLTS

General Specifications

Temperature Rating —
-70˚C TO + 125˚C

Altitude — 300,000 Feet

Shock* —
Z, Y, & X Enclosures —
200 g for 6 mS
W & M Enclosures (Stud Mtg.) —
100 g for 6 mS

Vibration, Sinusoidal* —
Z, Y, & X Enclosures —
30 g 33-3000Hz
W & M Enclosures (Stud Mtg.) —
20 g 33-3000Hz

Vibration, Random* —
Z, Y, & X Enclosures —
0.4 g^2/Hz 50-2000Hz
W & M Enclosures (Stud Mtg.) —
0.2 g^2/Hz 50-2000Hz

Dielectric Strength —
At Sea Level —
All circuits to ground and circuit to circuit — 1250 V rms
Coil to ground — 1000 V rms
At 80,000 Feet — 350 V rms

Insulation Resistance —
Initial (500 VDC) — 100 MΩ Min.
After Life or Environmental Tests —
50 MΩ Min.

Operate Time at Nominal Voltage —
DC Relays — 10 ms or less
AC Relays — 15 ms or less

Release Time at Nominal Voltage —
DC Relays — 10 ms or less
AC Relays — 50 ms or less

* Max. contact opening under vibration or shock 10 microseconds

Coil Data

Coil Code	Nominal Voltages	Freq. Hz	DC Res. AC Amps (B)	Over Temperature Range		
				Pickup or Below Volts	Dropout or Above Volts	Must Hold Voltage (C)
1	6	DC	20 Ω	4.5	0.3	2.5
2	12	DC	80 Ω	9.0	0.75	4.5
3	28	DC	320 Ω	18.0	1.5	7.0
4 (A)	28	DC	320 Ω	18.0	1.5	7.0
5	48	DC	920 Ω	32.0	2.5	14.0
6	28	400Hz	180 mA	22.0	1.25	10.0
7	28	50/400Hz	100 mA	22.0	1.25	10.0
8	115	400 Hz	40 mA	90.0	5.0	40.0
9	115	50/400 Hz	30 mA	95.0	5.0	40.0

A. CODE 4 COILS HAVE BACK EMF SUPPRESSION TO 42 VOLTS MAX.
B. DC COIL RESISTANCE ± 10% AT 25˚C; AC COIL MAX. CURRENT AT NOMINAL VOLTAGE.
C. RELAY WILL STAY IN PICKED-UP STATE DOWN TO MUST HOLD VOLTAGES SHOWN.
D. MAX. OVERVOLTAGE: 6 & 12 VDC COILS 120% OF NOMINAL; ALL OTHERS 110% OF NOMINAL.
E. COILS AVAILABLE FOR OTHER VOLTAGES AND FOR AC 50/60HZ.

NOTE: Only DC Coil Models are QPL Approved.

Catalog 5-1773450-5
Revised 3-13

www.te.com

Dimensions are shown for reference purposes only. Specifications subject to change.

Dimensions are in millimeters unless otherwise specified.

USA: +1 800 522 6752
Asia Pacific: +86 0 400 820 6015
UK: +44 800 267 666

For additional support numbers please visit www.te.com

FCA-125 Series, 25 Amperes, SPDT (Continued)

Below are shown the standard terminal types and the enclosures available. Specify the assembly as indicated under How To Order. Dimensions are shown in inches ± .010 and (Millimeters ± .25).

Terminals

CODE "A"
Socket Pins - All DC Coils
PIN TERMINALS ARE GOLD PLATED

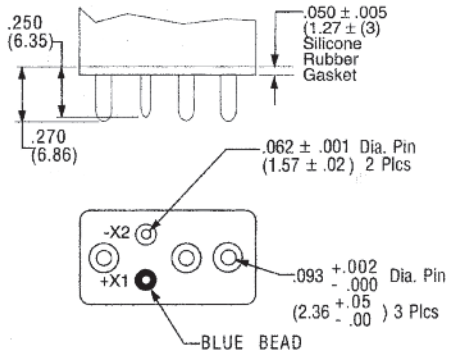

CODE "B"
Solder Pin Terminals
PIN TERMINALS TIN/LEAD PLATED

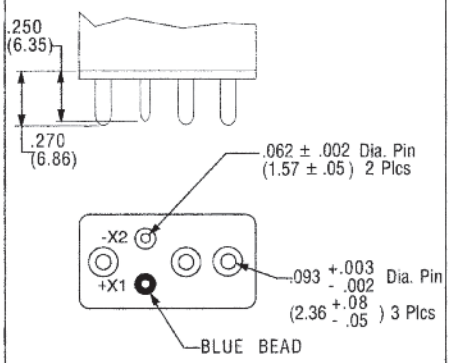

CODE "C"
Solder Hook Terminals
HOOK TERMINALS TIN/LEAD PLATED

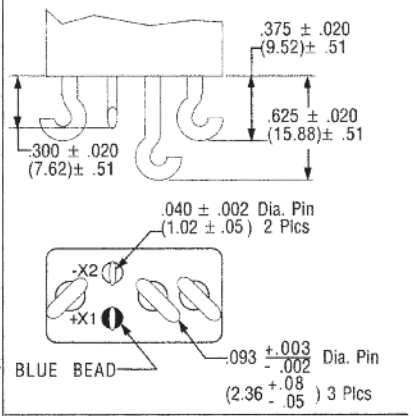

CODE "D"
Socket Pins - All AC Coils
PIN TERMINALS ARE GOLD PLATED

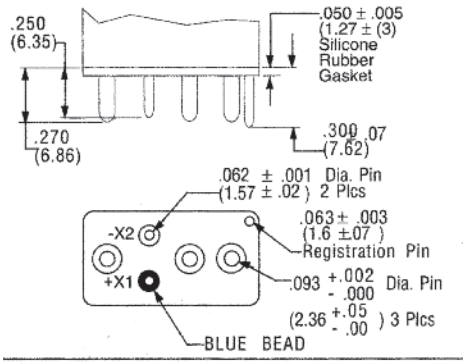

Enclosures

All Enclosures have cupro-Nickel cans bright acid tin/lead plated after assembly to terminal headers.

Dimensions: Inches ± .010 (mm ± .25)

"A" - AC Coils 1.125 in. (31.91) Max
DC Coils 1.010 in. (28.65) Max..

CODE "Z"

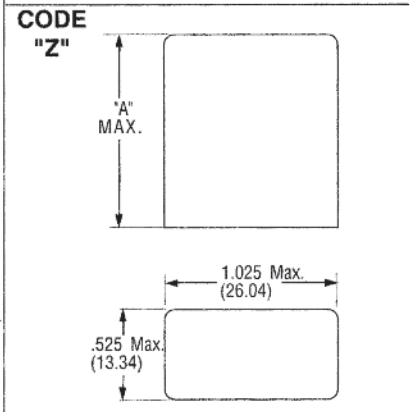

CODE "Y"

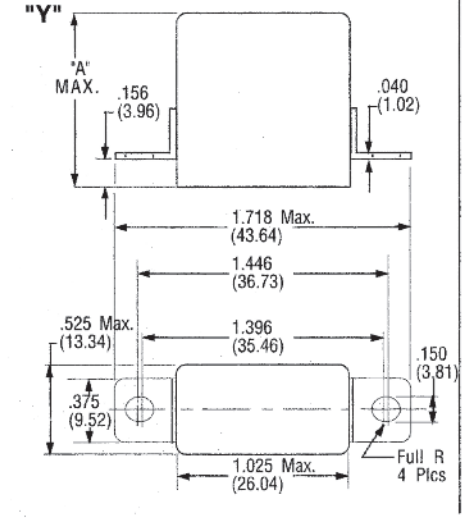

CODE "X"

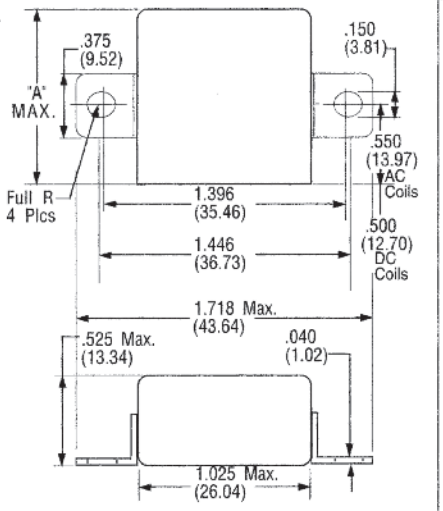

CODE "W"

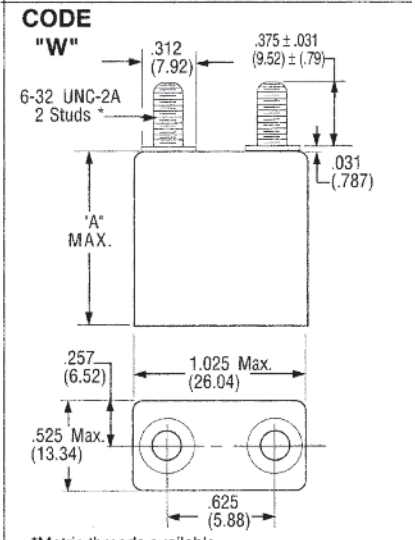

*Metric threads available.
To specify use M in place of W

Catalog 5-1773450-5
Revised 3-13

www.te.com

Dimensions are shown for reference purposes only. Specifications subject to change.

Dimensions are in millimeters unless otherwise specified.

USA: +1 800 522 6752
Asia Pacific: +86 0 400 820 6015
UK: +44 800 267 666

For additional support numbers please visit www.te.com

FCA-125 Series, 25 Amperes, SPDT (Continued)

Terminal Wiring

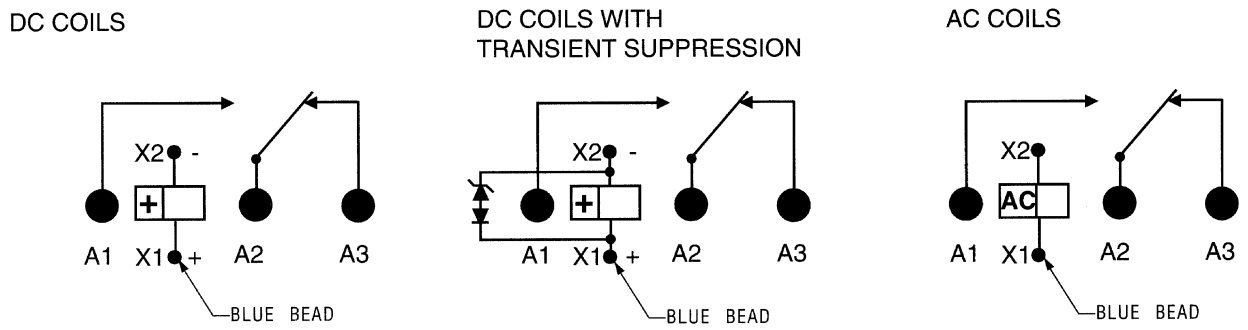

NOTE: Polarity must be observed with DC coil supply. Relay is polarized with a permanent magnet and will not operate or be damaged by reverse polarity.

Diodes used in transient suppression and in AC rectifier circuits have peak inverse voltage rating of 600 VDC minimum. Zener diodes have a minimum rating of 1 watt.

Terminal designations are for reference only and do not appear on the header.

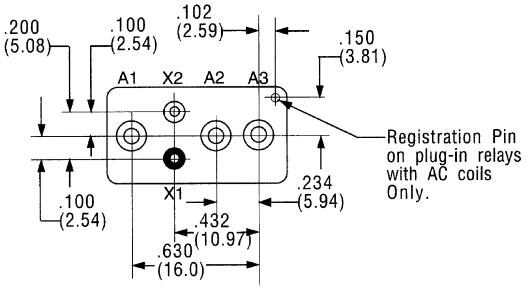

TERMINAL VIEW

HOW TO ORDER

FCA-125-A Y 4

RELAY TYPE

TERMINALS (Socket Pins, DC Coil)

ENCLOSURE (With Flanges)

COIL (28 VDC With Transient Suppression).

NOTE: Only DC coil models are QPL Approved

* The part number example shown on this page is for catalog items. For a list of specific QPL part numbers, please see the index in Section 15.

Catalog 5-1773450-5
Revised 3-13

www.te.com

Dimensions are shown for reference purposes only. Specifications subject to change.

Dimensions are in millimeters unless otherwise specified.

USA: +1 800 522 6752
Asia Pacific: +86 0 400 820 6015
UK: +44 800 267 666

For additional support numbers please visit www.te.com

FCA-325 Series, 25 Amperes, 3PDT

Product Facts

- **Hermetically Sealed**
- **All Welded Construction**
- **Balanced Force**
- **Permanent Magnet Drive**
- **Contacts — Silver Cadmium Oxide with Gold Plating**
- **Coils for DC, 50 to 400Hz and 400Hz AC**
- **Weight 2.89 ounces max. (82 grams)**
- **Qualified to M83536/32, /33**

The Series FCA-325 relay is a polarized single-side stable design, where the flux from a permanent magnet provides the armature holding force in the deactivated state, and its flux path is switched and combined with the coil flux in the operated state.

This results in appreciably increased contact pressure in both states over that of a spring return nonpolar design. We also manufacture other versions of this relay:

FCA-125 – 25 Amp SPDT Relay

FCAC-325 — 25 Ampere 3PST-NO Relay with 2 amp SPDT auxiliary

Contact Rating — Amperes
Ratings Are Continuous Duty

Type of Load	Life (Min.) Cycles x 10^3	28 VDC	115VAC 400Hz	115/200VAC	
				400Hz-3Ø	60Hz-3Ø*
Resistive	50	25	25	25	2.5
Inductive	10	12	—	—	2.5
Inductive	20	—	15	15	—
Motor	50	10	10	10	2.0
Lamp	50	5	5	5	1.0

*60 Hz loads rated for 10,000 operations

Overload Current — 50 AMPS DC, 80 AMPS 400Hz
Rupture Current — 60 AMPS DC, 100 AMPS 400Hz
Contact Make Bounce —1 MILLISECOND AT NOMINAL VOLTAGE
Max. Contact Drop at 25 Amps — INITIAL 0.150 VOLTS
End of Life — 0.175 VOLTS

General Specifications

Temperature Rating —
-70˚C TO + 125˚C

Altitude — 300,000 Feet

Shock* —
Z, Y, & V Enclosures —
200 g for 6 mS
W, X & M Enclosures —
100 g for 6 mS

Vibration, Sinusoidal* —
Z, Y, & V Enclosures —
30 g 33-3000Hz
W, X & M Enclosures —
20 g 33-3000Hz

Vibration, Random* —
Z, Y, & V Enclosures —
0.4 g^2/Hz 50-2000Hz
W, X & M Enclosures —
0.2 g^2/Hz 50-2000Hz

Dielectric Strength —
At Sea Level —
All circuits to ground and circuit to circuit — 1250 V rms
Coil to ground — 1000 V rms
At 80,000 Feet — 350 V rms

Insulation Resistance —
Initial (500 VDC) — 100 MΩ Min.
After Life or Environmental Tests —
50 MΩ Min.

Operate Time at Nominal Voltage —
DC Relays — 15 ms or less
AC Relays — 20 ms or less

Release Time at Nominal Voltage —
DC Relays — 15 ms or less
AC Relays — 50 ms or less

* Max. contact opening under vibration or shock 10 microseconds

Coil Data

Coil Code	Nominal Voltages	Freq. Hz	DC Res. AC Amps (B)	Over Temperature Range		
				Pickup or Below Volts	Dropout or Above Volts	Must Hold Voltage (C)
1	6	DC	18 Ω	4.5	0.3	2.5
2	12	DC	70 Ω	9.0	0.75	4.5
3	28	DC	290 Ω	18.0	1.5	7.0
4 (A)	28	DC	290 Ω	18.0	1.5	7.0
5	48	DC	865 Ω	32.0	2.5	14.0
6	28	400Hz	225 mA	22.0	1.25	10.0
7	28	50/400Hz	120 mA	22.0	1.25	10.0
8	115	400 Hz	40 mA	90.0	5.0	40.0
9	115	50/400 Hz	30 mA	95.0	5.0	40.0

A. CODE 4 COILS HAVE BACK EMF SUPPRESSION TO 42 VOLTS MAX.
B. DC COIL RESISTANCE ± 10% AT 25˚C; AC COIL MAX. CURRENT AT NOMINAL VOLTAGE.
C. RELAY WILL STAY IN PICKED-UP STATE DOWN TO MUST HOLD VOLTAGES SHOWN.
D. MAX. OVER-VOLTAGE: 6 & 12 VDC COILS 120% OF NOMINAL; ALL OTHERS 110% OF NOMINAL.
E. COILS AVAILABLE FOR OTHER VOLTAGES AND FOR AC 50/60HZ.

NOTE: Only DC Coil Models are QPL Approved.

Catalog 5-1773450-5
Revised 3-13

www.te.com

Dimensions are shown for reference purposes only. Specifications subject to change.

Dimensions are in millimeters unless otherwise specified.

USA: +1 800 522 6752
Asia Pacific: +86 0 400 820 6015
UK: +44 800 267 666

For additional support numbers please visit www.te.com

FCA-325 Series, 25 Amperes, 3PDT (Continued)

Below are shown the standard terminal types and the enclosures available. Specify the assembly as indicated under How To Order. Dimensions are shown in inches ± .010 and (Millimeters ± .25).

Terminals

CODE "A" Socket Pins - All DC Coils

PIN TERMINALS ARE GOLD PLATED

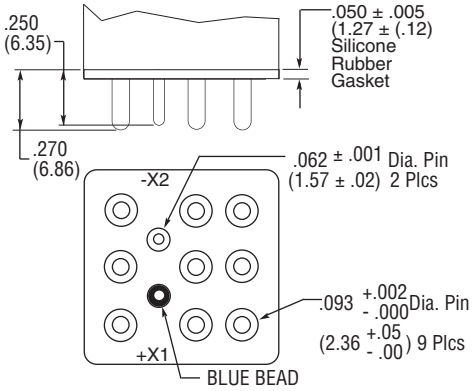

CODE "B" Solder Pin Terminals

PIN TERMINALS TIN/LEAD PLATED

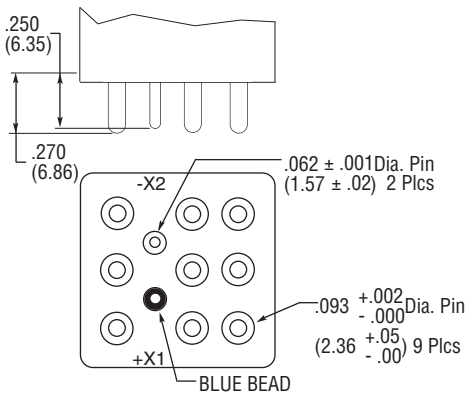

CODE "C" Solder Hook Terminals

HOOK TERMINALS TIN/LEAD PLATED

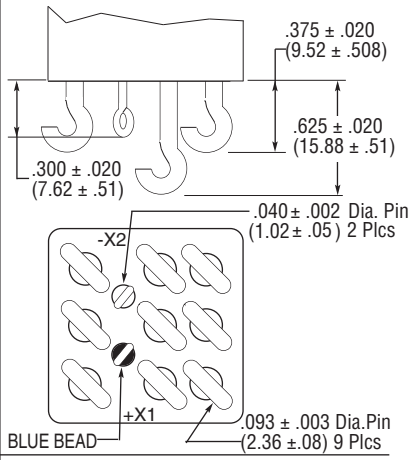

CODE "V"

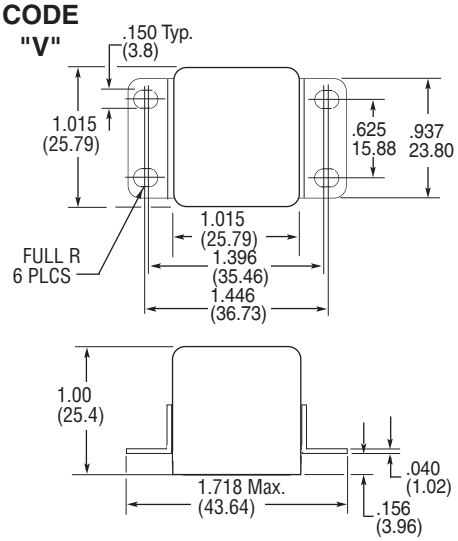

Enclosures

All Enclosures have cupro-Nickel cans bright acid tin/lead plated after assembly to terminal headers.

Dimensions: Inches ± .010 (mm ± .25)

For socket pin terminals: specify "Y" enclosures with DC coils and "V" enclosures with AC coils.

CODE "Z"

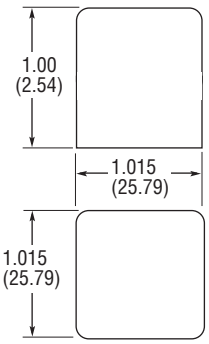

CODE "Y"

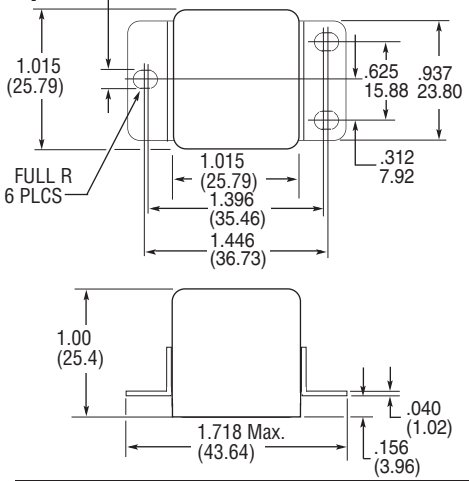

CODE "X"

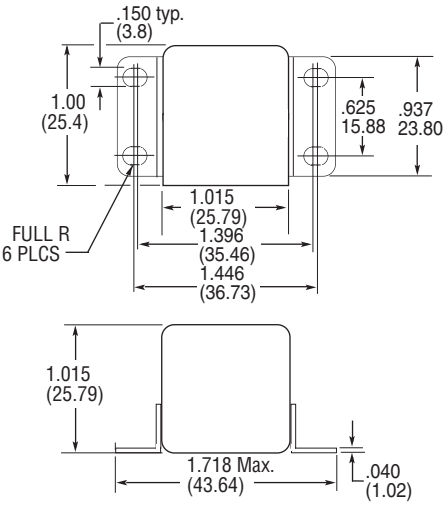

CODE "W"

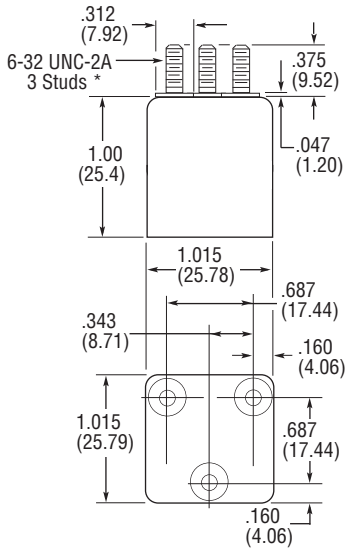

*Metric threads available,To specify use M in place of W

FCA-325 Series, 25 Amperes, 3PDT (Continued)

Terminal Wiring

DC Coils

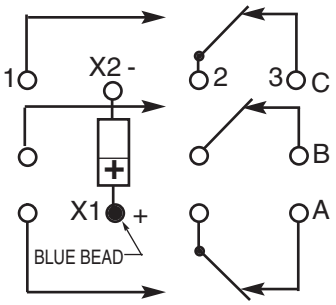

DC Coils with Transient Suppression

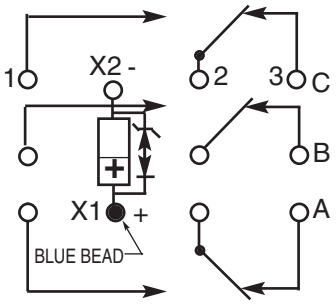

AC Coils

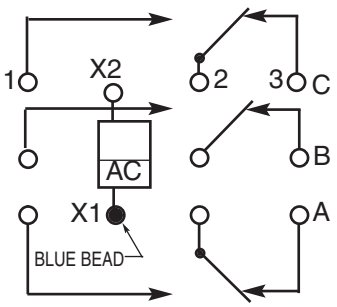

NOTE: Polarity must be observed with DC coil supply. Relay is polarized with a permanent magnet and will not operate or be damaged by reverse polarity.

Diodes used in transient suppression and in AC rectifier circuits have peak inverse voltage rating of 600 VDC minimum. Zener diodes have a minimum rating of 1 watt.

Terminal designations are for reference only and do not appear on the header.

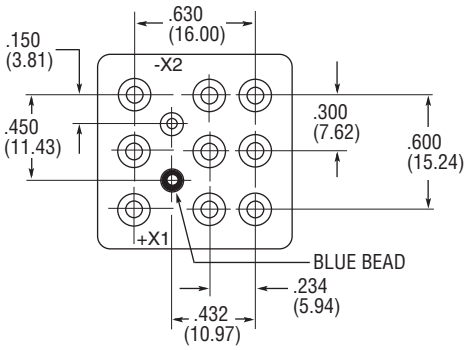

TERMINAL VIEW

HOW TO ORDER

FCA-325-A Y 4

RELAY TYPE

TERMINALS (Socket Pins, DC Coil)

ENCLOSURE (With Flanges)

COIL (28 VDC With Transient Suppression).

NOTE: Only DC coil models are QPL Approved

* The part number example shown on this page is for catalog items. For a list of specific QPL part numbers, please see the index in Section 15.

Catalog 5-1773450-5
Revised 3-13

www.te.com

Dimensions are shown for reference purposes only. Specifications subject to change.

Dimensions are in millimeters unless otherwise specified.

USA: +1 800 522 6752
Asia Pacific: +86 0 400 820 6015
UK: +44 800 267 666

For additional support numbers please visit www.te.com

FCAC-325 Series, 25 Amperes, 3PST-NO with 2 Amp SPDT Auxiliary Contacts

Product Facts

- **Hermetically Sealed**
- **All Welded Construction**
- **Balanced Force**
- **Permanent Magnet Drive**
- **Contacts — Silver Cadmium Oxide with Gold Plating**
- **Coils for DC, 50 to 400Hz and 400Hz AC**
- **Weight 2.89 ounces max. (82grams)**

The Series FCAC-325 relay is a polarized single-side stable design, where the flux from a permanent magnet provides the armature holding force in the deactivated state, and its flux path is switched and combined with the coil flux in the operated state. This results in appreciably increased contact pressure in both states over that of a spring return nonpolar design. We also manufacture other versions of this relay:

FCA-125 — 25 Ampere SPDT Relay

FCA-325 — 25 Ampere 3PDT Relay

General Specifications

Temperature Rating —
-70˚C TO + 125˚C

Altitude — 300,000 Feet

Shock* —
Z, Y, & V Enclosures —
200 g for 6 mS
W, X & M Enclosures —
100 g for 6 mS

Vibration, Sinusoidal* —
Z, Y, & VEnclosures —
30 g 33-3000Hz
W, X & M Enclosures —
20 g 33-3000Hz

Vibration, Random* —
Z, Y, & V Enclosures —
0.4 g^2/Hz 50-2000Hz
W, X & M Enclosures —
0.2 g^2/Hz 50-2000Hz

Dielectric Strength —
At Sea Level —
All circuits to ground and circuit to circuit — 1250 V rms
Coil to ground — 1000 V rms
At 80,000 Feet — 350 V rms

Insulation Resistance —
Initial (500 VDC) — 100 MΩ Min.
After Life or Environmental Tests —
50 MΩ Min.

Operate Time at Nominal Voltage —
DC Relays — 15 ms or less
AC Relays — 10 ms or less

Release Time at Nominal Voltage —
DC Relays — 15 ms or less
AC Relays — 50 ms or less

* Max. contact opening under vibration or shock 10 microseconds

Contact Rating — Amperes
Ratings Are Continuous Duty

Type of Load	Life (Min.) Cycles x10³	28 VDC Main	28 VDC Aux.	115VAC 400Hz Main	115VAC 400Hz Aux.	115/200VAC 400Hz-3Ø	115/200VAC 60Hz-3Ø*
Resistive	50	25	2	25	2	25	2.5
Inductive	10	12	1	—	—	—	2.5
Inductive	20	—	—	15	1	15	—
Motor	50	10	—	10	—	10	2.0
Lamp	50	5	.5	5	.5	.5	1.0

*60 Hz loads rated for 10,000 operations

Overload Current — 50 AMPS DC, 80 AMPS 400Hz
Rupture Current — 60 AMPS DC, 100 AMPS 400Hz
Contact Make Bounce —1 MILLISECOND AT NOMINAL VOLTAGE
Auxiliary Contact Bounce — 4 MILLISECONDS MAX.
Max. Contact Drop at 25 Amps — INITIAL 0.150 VOLTS
End of Life — 0.175 VOLTS

Coil Data

Coil Code	Nominal Voltages	Freq. Hz	DC Res. AC Amps (B)	Over Temperature Range: Pickup or Below Volts	Over Temperature Range: Dropout or Above Volts	Over Temperature Range: Must Hold Voltage (C)
1	6	DC	18 Ω	4.5	0.3	2.5
2	12	DC	70 Ω	9.0	0.75	4.5
3	28	DC	290 Ω	18.0	1.5	7.0
4 (A)	28	DC	290 Ω	18.0	1.5	7.0
5	48	DC	865 Ω	32.0	2.5	14.0
6	28	400Hz	225 mA	22.0	1.25	10.0
7	28	50/400Hz	120 mA	22.0	1.25	10.0
8	115	400 Hz	40 mA	90.0	5.0	40.0
9	115	50/400 Hz	30 mA	95.0	5.0	40.0

A. CODE 4 COILS HAVE BACK EMF SUPPRESSION TO 42 VOLTS MAX.
B. DC COIL RESISTANCE ± 10% AT 25˚C; AC COIL MAX. CURRENT AT NOMINAL VOLTAGE.
C. RELAY WILL STAY IN PICKED-UP STATE DOWN TO MUST HOLD VOLTAGES SHOWN.
D. MAX. OVERVOLTAGE: 6 & 12 VDC COILS 120% OF NOMINAL; ALL OTHERS 110% OF NOMINAL.
E. COILS AVAILABLE FOR OTHER VOLTAGES AND FOR AC 50/60HZ.

Catalog 5-1773450-5
Revised 3-13

www.te.com

Dimensions are shown for reference purposes only. Specifications subject to change.

Dimensions are in millimeters unless otherwise specified.

USA: +1 800 522 6752
Asia Pacific: +86 0 400 820 6015
UK: +44 800 267 666

For additional support numbers please visit www.te.com

FCAC-325 Series (Continued)

Below are shown the standard terminal types and the enclosures available. Specify the assembly as indicated under How To Order. Dimensions are shown in inches ± .010 and (Millimeters ± .25).

Terminals

CODE "A"
Socket Pin Terminals
Pin Terminals are Gold Plated

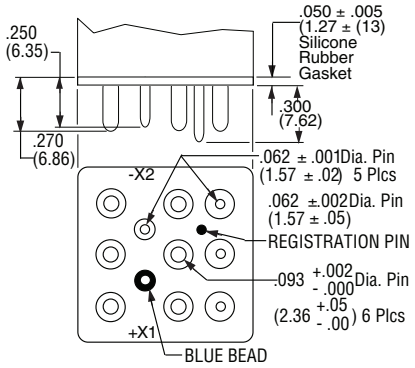

CODE "B"
Solder Pin Terminals
Pin Terminals are Tin/Lead Plated

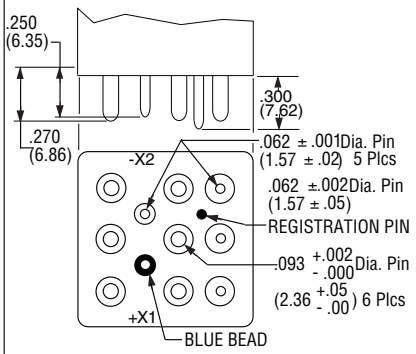

CODE "C"
Solder Hook Terminals
Hook Terminals are Tin/Lead Plated

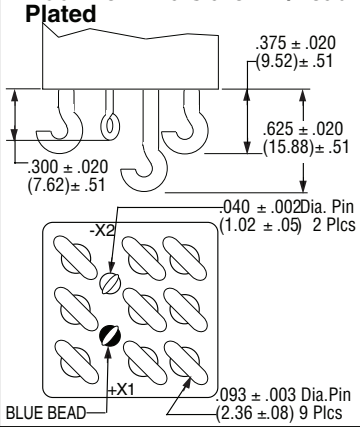

CODE "V"

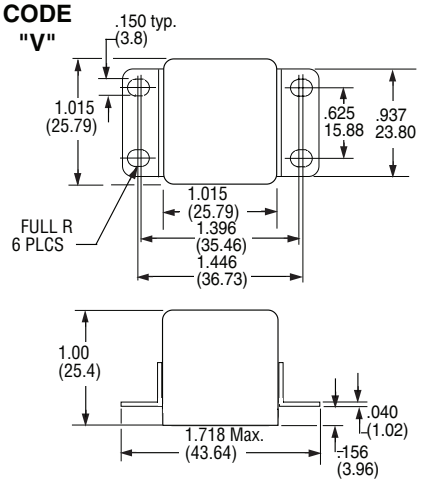

ENCLOSURES

All Enclosures have cupro-Nickel cans bright acid tin/lead plated after assembly to terminal headers.

Dimensions: Inches ± .010 (mm ± .25)

For socket pin terminals: specify "Y" enclosures with DC coils and "V" enclosures with AC coils.

CODE "Z"

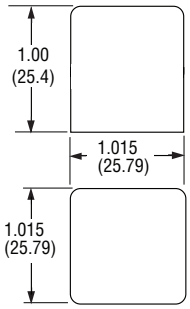

CODE "Y"

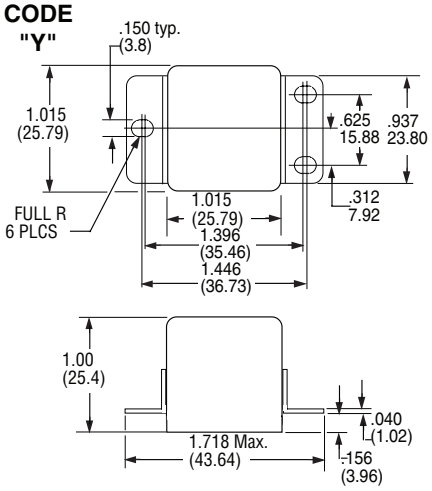

CODE "X"

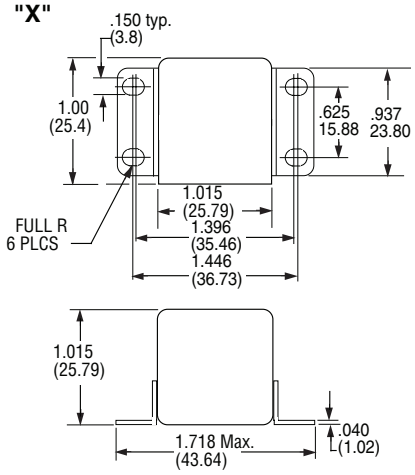

CODE "W"

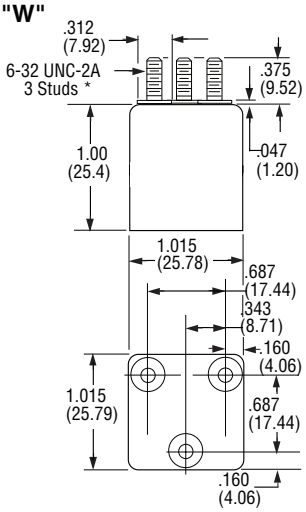

*Metric threads available, To specify use M in place of W

Catalog 5-1773450-5
Revised 3-13

www.te.com

Dimensions are shown for reference purposes only. Specifications subject to change.

Dimensions are in millimeters unless otherwise specified.

USA: +1 800 522 6752
Asia Pacific: +86 0 400 820 6015
UK: +44 800 267 666

For additional support numbers please visit www.te.com

FCAC-325 Series (Continued)

Terminal Wiring

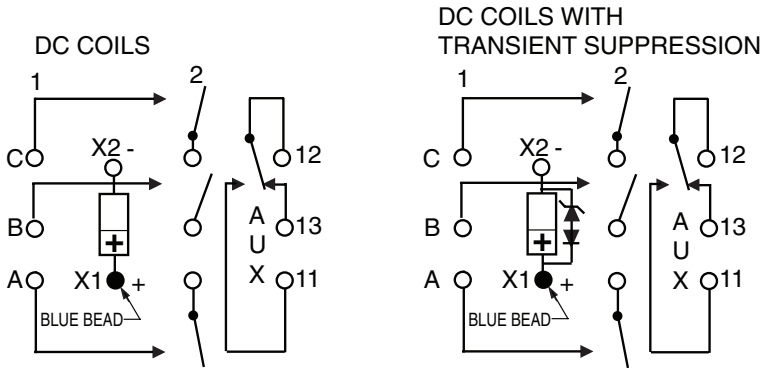

NOTE: Polarity must be observed with DC coil supply. Relay is polarized with a permanent magnet and will not operate or be damaged by reverse polarity.

Diodes used in transient suppression and in AC rectifier circuits have peak inverse voltage rating of 600 VDC minimum. Zener diodes have a minimum rating of 1 watt.

Terminal designations are for reference only and do not appear on the header.

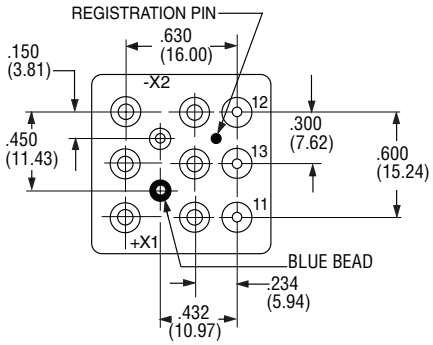

TERMINAL VIEW

HOW TO ORDER

FCAC-325 -A Y 4

RELAY TYPE

TERMINALS (Socket Pins, DC Coil)

ENCLOSURE (With Flanges and DC Coil)

COIL (28 VDC With Transient Suppression)

Catalog 5-1773450-5
Revised 3-13

www.te.com

Dimensions are shown for reference purposes only. Specifications subject to change.

Dimensions are in millimeters unless otherwise specified.

USA: +1 800 522 6752
Asia Pacific: +86 0 400 820 6015
UK: +44 800 267 666

For additional support numbers please visit www.te.com

FCA-150 Series, 50 Amps, 1PST/NO (DM) Relay

Product Facts

- **Non-latching relay**
- **Balanced force design**
- **Corrosion protected metal enclosure**
- **All welded hermetically sealed enclosure occupies about 1 in³ (16.4 cm³)**
- **1 Form X (SPST-NO-DM)**
- **6, 12 and 28 Vdc coils**
- **Weight: 90 grams**
- **Designed and built in accordance to MIL-PRF-6106**

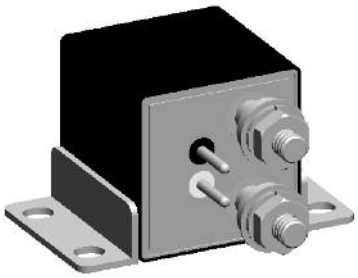

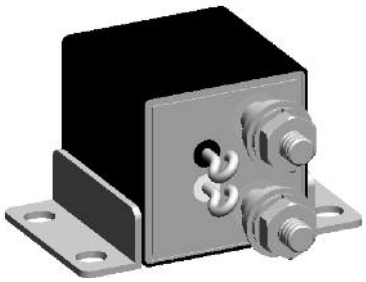

The FCA-150 series relay is a polarized, single-side stable design, where the flux from a permanent magnet provides the armature holding force in the deactivated state, and its flux path is switched and combined with the coil flux in the operated state. This results in appreciably increased contact pressure in both states over that of a spring return non-polar design.

1 Form X (SPST-NO-DM) configuration with main contacts rated 50 Amps.

Specifications

Contact Data				
Contact Form	1 Form X (SPST-NO-DM)			
Contact Rating in Amps (Continuous Duty)				
	Type of Load	Life (Min.) Cycles	28 Vdc	
	Resistive	50,000	50	
	Inductive (L/R=5ms)	20,000	20	
	Motor	20,000	20	
	None	100,000	–	
Overload Current (Resistive)	200 A, 50 cycles			
Max. Contact Drop at 10A	Initial 30mV; After Life 175mV			
Operate Time at Nominal Voltage	15ms			
Release Time	15ms			
Bounce Time	1ms			
Coil Data				
Coil Code	1	2	3	4
Nominal Operating Voltage (Vdc)	6	12	28	28
Maximum Operating Voltage (Vdc)	7.3	14.5	29	29
Maximum Pick-Up Voltage at +125°C	4.5	9	18	18
Maximum Pick-Up Voltage at +125°C, continuous current test (Vdc)	5.7	11.25	22.5	22.5
Drop-Out Voltage at OTR	0.3 – 2.5	0.75 – 4.5	1.5 – 7.0	1.5 – 7.0
Maximum Coil Current at +25°C (A)	.50	.26	.15	.15
Back EMF Suppressed to (Vdc) (Max)	N/A	N/A	N/A	-42
Coil Resistance ±10%	18Ω	70Ω	290Ω	290Ω

Catalog 5-1773450-5
Revised 3-13

www.te.com

Dimensions are shown for reference purposes only. Specifications subject to change.

Dimensions are in millimeters unless otherwise specified.

USA: +1 800 522 6752
Asia Pacific: +86 0 400 820 6015
UK: +44 800 267 666

For additional support numbers please visit www.te.com

FCA-150 Series, 50 Amps, 1PST/NO (DM) Relay (Continued)

Specifications

Electrical Data	
Initial Insulation Resistance (note 1)	100 megohms, minimum, at 500Vdc, between each pin and case
Insulation Resistance After Life or Environmental Test (note 1)	50 megohms, minimum, at 500Vdc, between each pin and case
Dielectric Strength At Sea Level	
Contacts to Ground and Between Contacts	1,250Vrms, 60 Hz.
Coil to Ground	1,000Vrms, 60 Hz.
Dielectric Strength at 80,000 ft (25,000m), All Points (note 4)	500Vrms, 60 Hz
Environmental Data	
Ambient Temperature Range, Operating	-70°C to +125°C
Altitude	300,000 feet
Shock Resistance	50 G's, 11 ms.
Vibration Resistance, Sinusoidal	20 G's, 75-3000Hz.
Mechanical Data	
Approximate Weight	3.2 oz. (90g) Max.

NOTES

1. All wired terminals must be connected together during this test. Dielectric withstanding voltage and insulation resistance are measured between all mutually insulated wired terminals and between all these terminals and case.

Terminals

CODE "B"

Solder Pin Terminals
Tin/Lead Plated

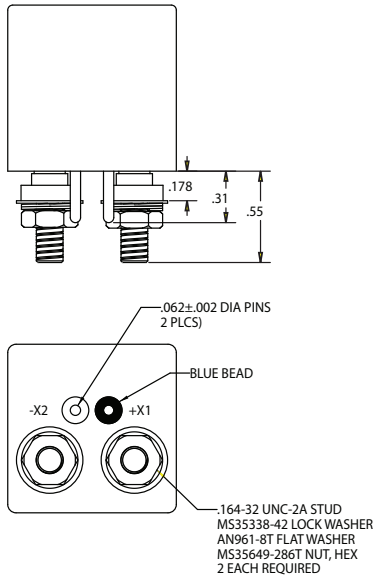

CODE "C"

Solder Hook Terminals
Tin/Lead Plated

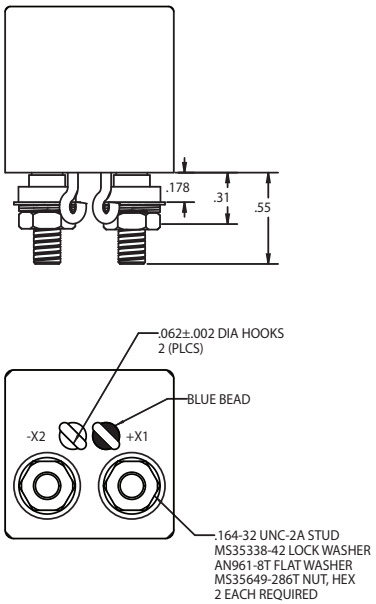

CODE "K"

Terminal Shield

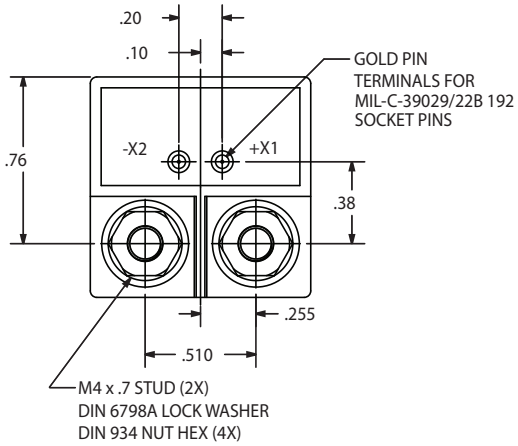

Catalog 5-1773450-5
Revised 3-13

www.te.com

Dimensions are shown for reference purposes only. Specifications subject to change.

Dimensions are in millimeters unless otherwise specified.

USA: +1 800 522 6752
Asia Pacific: +86 0 400 820 6015
UK: +44 800 267 666

For additional support numbers please visit www.te.com

FCA-150 Series, 50 Amps, 1PST/NO (DM) Relay (Continued)

Outline Dimensions

The standard terminal types and enclosures are illustrated below with dimensions in inches ± 0.010 and (millimeters ±0.25).

Enclosures

CODE "U"

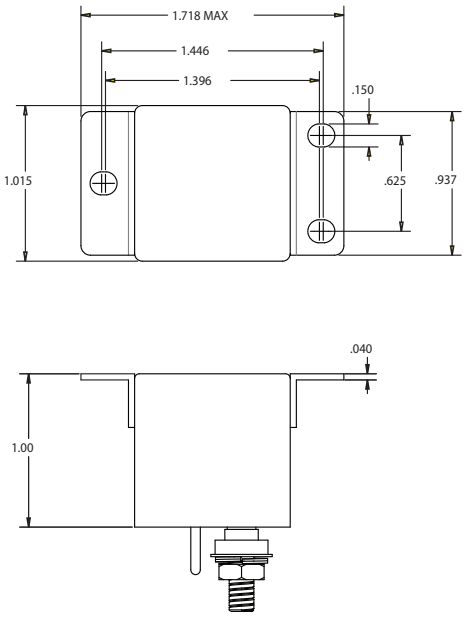

CODE "Y"

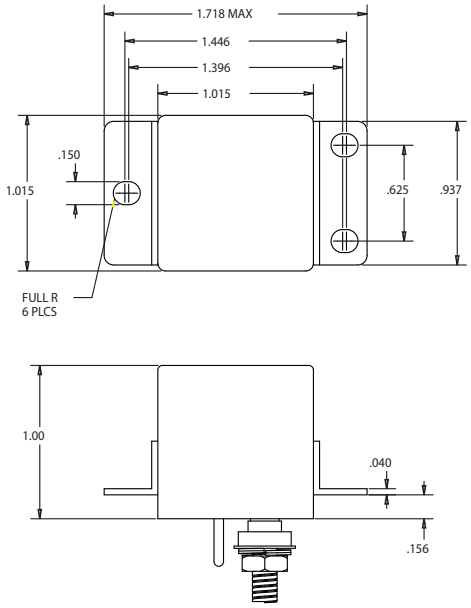

CODE "X"

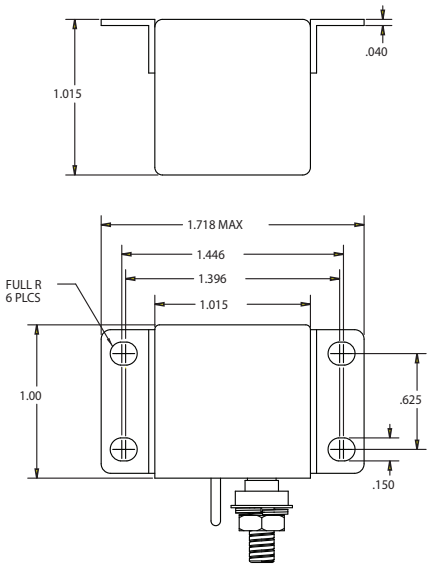

CODE "R"

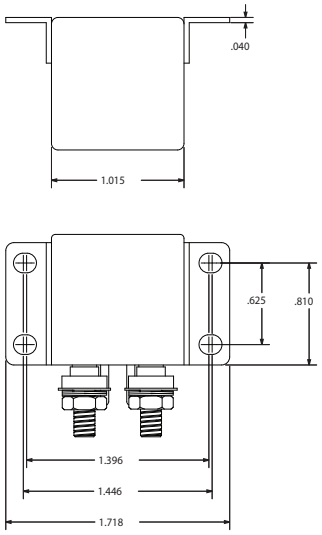

CODE "Z"

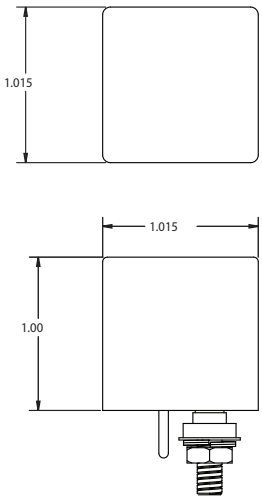

Catalog 5-1773450-5
Revised 3-13

www.te.com

Dimensions are shown for reference purposes only. Specifications subject to change.

Dimensions are in millimeters unless otherwise specified.

USA: +1 800 522 6752
Asia Pacific: +86 0 400 820 6015
UK: +44 800 267 666

For additional support numbers please visit www.te.com

FCA-150 Series, 50 Amps, 1PST/NO (DM) Relay (Continued)

Terminal Wiring

DC Coils

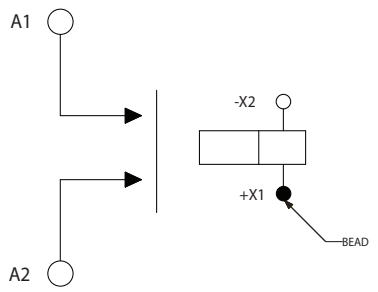

DC Coils with Transient Suppression

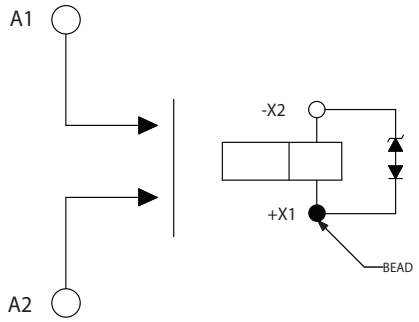

NOTE: Polarity must be observed with DC coil supply. Relay is polarized with a permanent magnet and will not operate or be damaged by reverse polarity.

Diodes used in transient suppression and in AC rectifier circuits have peak inverse voltage rating of 600 VDC minimum. Zener diodes have a minimum rating of 1 watt.

Terminal designations are for reference only and do not appear on the header.

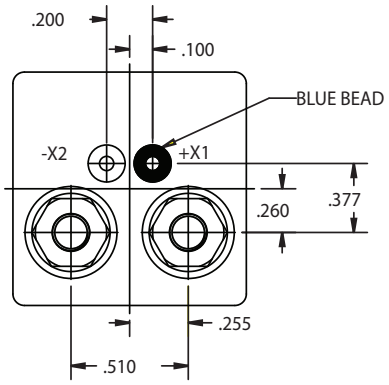

TERMINAL VIEW

How to Order

Typical Part Number	FCA-150	-A	Y	3

Series and Contact Arrangement:
FCA-150 = Relay with 1 Form X Main Contacts

Terminals (see drawings for details):
B = Solder Pin Coil Terminals, Stud Power Terminals
C = Solder Hook Coil Terminals, Stud Power Terminals
K = Terminal Block, Stud Power Terminals

Enclosure (see drawings for details):
R = Horizontal Flange Mount, Rotated
Y = Raised Vertical Flange Mount
U = Flush Vertical Flange Mount
Z = No Mount
X = Horizontal Flange Mount

Coil:
1 = 6Vdc nominal
2 = 12Vdc nominal
3 = 28Vdc nominal
4 = 28Vdc nominal, with back EMF suppression

Catalog 5-1773450-5
Revised 3-13

www.te.com

Dimensions are shown for reference purposes only. Specifications subject to change.

Dimensions are in millimeters unless otherwise specified.

USA: +1 800 522 6752
Asia Pacific: +86 0 400 820 6015
UK: +44 800 267 666

For additional support numbers please visit www.te.com

FCA-150NC Series, 50 Amps, 1PST/NC (DB) Relay

Product Facts

- **Non latching hermetically sealed relay**
- **Balanced force design**
- **Hermetically sealed, corrosion protected metal can**
- **All welded construction**
- **6, 12 and 28Vdc coils available.**
- **Weight 90 grams**
- **Designed and built in accordance to MIL-PRF-6106**

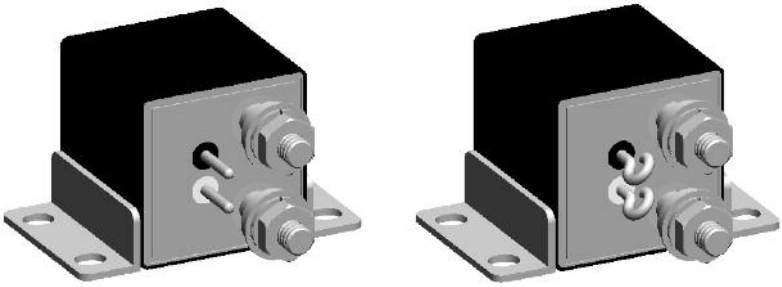

Specifications

General Characteristics				
Temperature range			-70° C to +125° C	
Altitude			300,000 feet	
Dielectric strength at sea level - Contacts to ground and between contacts - Coil to ground			 1250 Vrms / 60 Hz 1000 Vrms / 60 Hz	
Dielectric strength at altitude 25000 m (80,000 ft) (all points)			500 Vrms / 60 Hz	
Initial insulation resistance at 500 Vdc			100 MΩ min.	
Initial insulation after life or environmental test			50 MΩ min.	
Sinusoidal vibration			20g / 75 to 3000 Hz	
Shock			50g / 11 ms	
Operate time at nominal voltage			15 ms max.	
Release time			15 ms max.	
Bounce time			1 ms max.	
Contact voltage drop at nominal current -initial value -after life			 150 mV max. 175 mV max.	
Coil Data				
Coil Code	1	2	3	4(A)
Nominal Operating Voltage (Vdc)	6	12	28	28
Maximum Operating Voltage (Vdc)	7.3	14.5	29	29
Maximum Pick-Up Voltage at +125°C	4.5	9	18	18
Maximum Pick-Up Voltage at +125°C, continuous current test (Vdc)	5.7	11.25	22.5	22.5
Drop-Out Voltage at OTR	0.3 – 2.5	0.75 – 4.5	1.5 – 7.0	1.5 – 7.0
Maximum Coil Current at +25°C (mA)	.50	.26	.15	.15
Back EMF Suppressed to (Vdc)	N/A	N/A	N/A	-42
Coil Resistance	18Ω	70Ω	290Ω	290Ω

For other coil voltages, consult factory.

Catalog 5-1773450-5
Revised 3-13

www.te.com

Dimensions are shown for reference purposes only. Specifications subject to change.

Dimensions are in millimeters unless otherwise specified.

USA: +1 800 522 6752
Asia Pacific: +86 0 400 820 6015
UK: +44 800 267 666

For additional support numbers please visit www.te.com

FCA-150NC Series, 50 Amps, 1PST/NC (DB) Relay (Continued)

Contact Electrical Characteristics

Contact Type	Rated Current	Rated Voltage
Main Contact	50A	28Vdc
Minimum Operating cycles	**Contact rating per pole and load type MAIN Contact**	**Load Currents in Amps**
50,000 cycles	Resistive load	50
20,000 cycles	Inductive load (L/R=5ms)	20
20,000 cycles	Motor load	20
50 cycles	Resistive overload	200
100,000 cycles	No Load	

All endurance ratings are subject to validation - consult factory

Terminals

CODE "B"

Solder Pin Terminals
Tin/Lead Plated

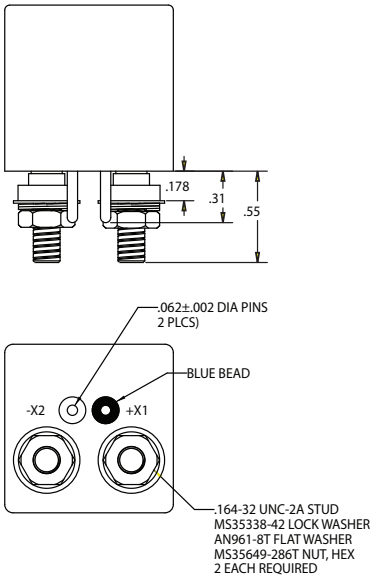

CODE "C"

Solder Hook Terminals
Tin/Lead Plated

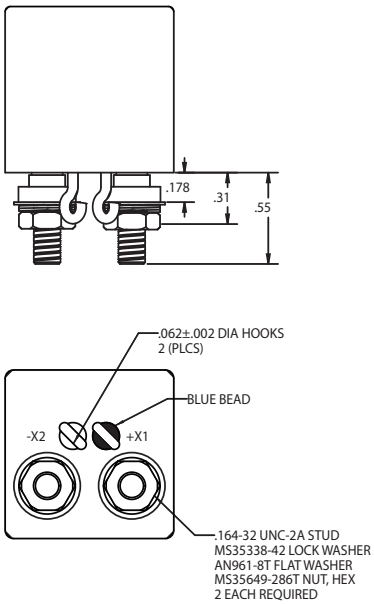

CODE "K"

Terminal Shield

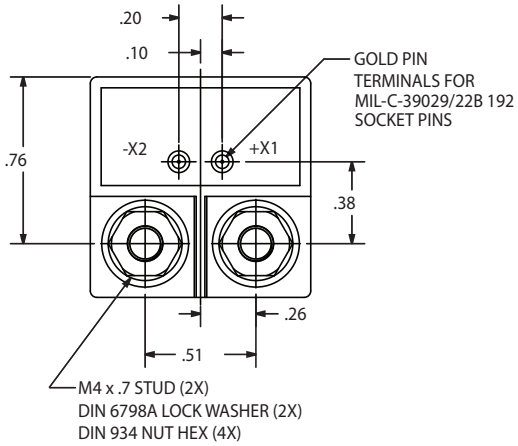

Catalog 5-1773450-5
Revised 3-13

www.te.com

Dimensions are shown for reference purposes only. Specifications subject to change.

Dimensions are in millimeters unless otherwise specified.

USA: +1 800 522 6752
Asia Pacific: +86 0 400 820 6015
UK: +44 800 267 666

For additional support numbers please visit www.te.com

FCA-150NC Series, 50 Amps, 1PST/NC (DB) Relay (Continued)

Outline Dimensions

The standard terminal types and enclosures are illustrated below with dimensions in inches ± 0.010 and (millimeters ±0.25).

Enclosures

CODE "U"

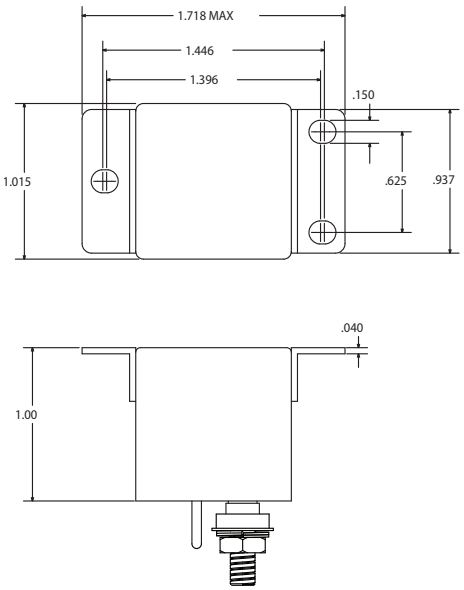

CODE "Y"

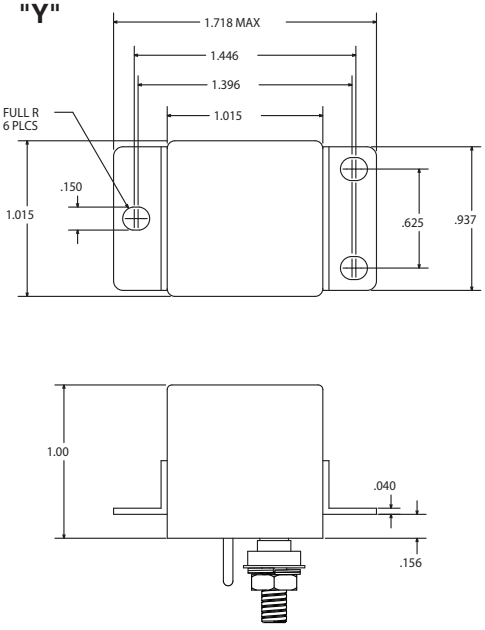

CODE "Z"

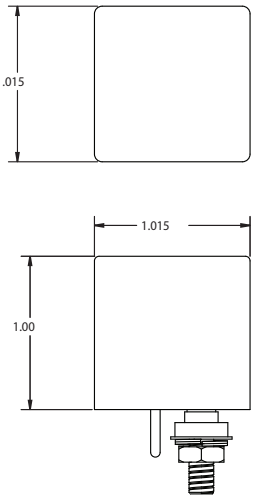

CODE "X"

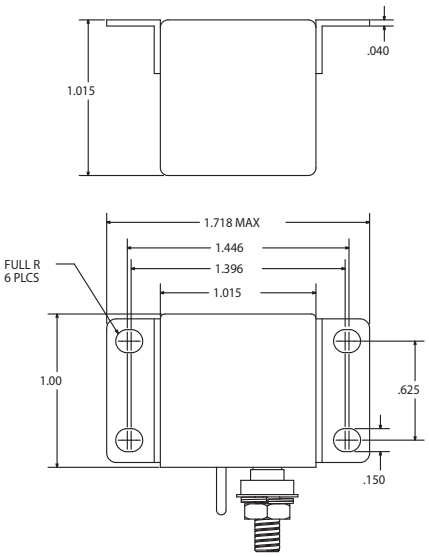

CODE "V"

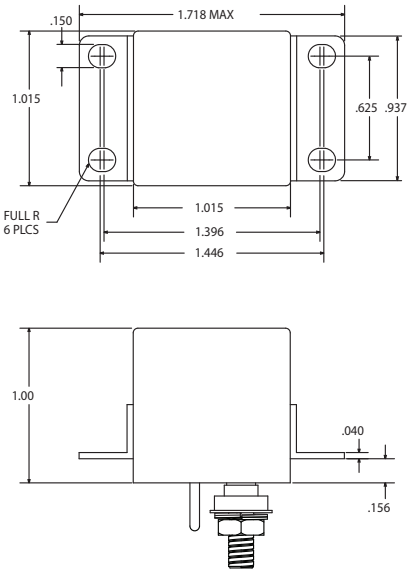

CODE "R"

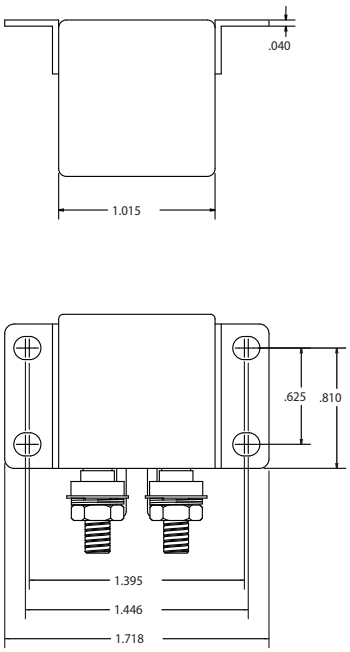

Catalog 5-1773450-5
Revised 3-13

www.te.com

Dimensions are shown for reference purposes only. Specifications subject to change.

Dimensions are in millimeters unless otherwise specified.

USA: +1 800 522 6752
Asia Pacific: +86 0 400 820 6015
UK: +44 800 267 666

For additional support numbers please visit www.te.com

FCA-150NC Series, 50 Amps, 1PST/NC (DB) Relay (Continued)

Terminal Wiring

DC Coils

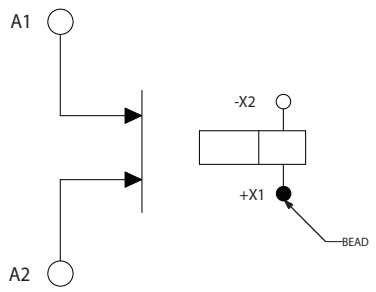

DC Coils with Transient Suppression

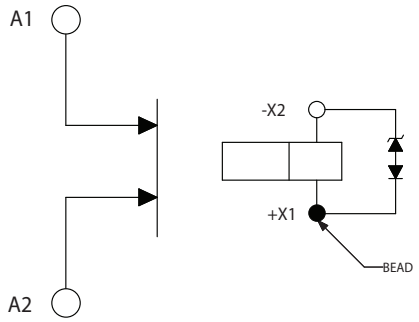

NOTE: Polarity must be observed with DC coil supply. Relay is polarized with a permanent magnet and will not operate or be damaged by reverse polarity.

Diodes used in transient suppression and in AC rectifier circuits have peak inverse voltage rating of 600 VDC minimum. Zener diodes have a minimum rating of 1 watt.

Terminal designations are for reference only and do not appear on the header.

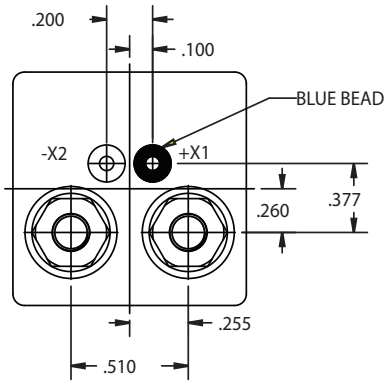

TERMINAL VIEW

PART NUMBERING SYSTEM

FCA - 150NC | B | Y | 4

RELAY TYPE — FCA - 150NC

TERMINALS — B

ENCLOSURE — Y

COIL — 4

Catalog 5-1773450-5
Revised 3-13

www.te.com

Dimensions are shown for reference purposes only. Specifications subject to change.

Dimensions are in millimeters unless otherwise specified.

USA: +1 800 522 6752
Asia Pacific: +86 0 400 820 6015
UK: +44 800 267 666

For additional support numbers please visit www.te.com

FCAC-150 Series, 50 Amps, 1PST/NO (DM) with 1PDT Auxiliary Contacts

Product Facts

- **Non-latching relay**
- **Balanced force design**
- **Corrosion protected metal enclosure**
- **All welded hermetically sealed enclosure occupies about 1 in³ (16.4 cm³)**
- **1 Form C (SPDT) auxiliary contact**
- **6, 12 and 28 Vdc coils**
- **Weight: 90 grams**
- **Designed and built in accordance to MIL-PRF-6106**

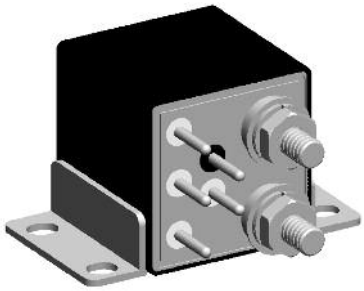

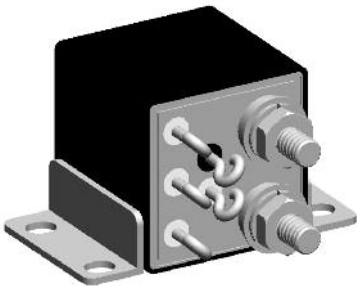

The FCAC-150 series relay is a polarized, single-side stable design, where the flux from a permanent magnet provides the armature holding force in the deactivated state, and its flux path is switched and combined with the coil flux in the operated state. This results in appreciably increased contact pressure in both states over that of a spring return non-polar design.

A 1 form C (SPDT) auxiliary contact set rated 2 amps is available.

Specifications

Auxiliary Contact Data

Contact Form		1 Form X (SPDT-NO-DM) with 1 Form C (SPDT) Auxiliary		
Contact Rating in Amps (Continuous Duty)				
	Type of Load	Life (Min.) Cycles	28 Vdc	115 Vac 400Hz
	Resistive	50,000	50	50
	Inductive (L/R=5ms)	20,000	20	20
	Motor	20,000	20	20
	None	100,000	–	–

Coil Data

Coil Code	1	2	3	4(A)
Nominal Operating Voltage (Vdc)	6	12	28	28
Maximum Operating Voltage (Vdc)	7.3	14.5	29	29
Maximum Pick-Up Voltage at +125°C	4.5	9	18	18
Maximum Pick-Up Voltage at +125°C, continuous current test (Vdc)	5.7	11.25	22.5	22.5
Drop-Out Voltage at OTR	0.3 – 2.5	0.75 – 4.5	1.5 – 7.0	1.5 – 7.0
Maximum Coil Current at +25°C (mA)	.50	.26	.15	.15
Back EMF Suppressed to (Vdc) (max)	N/A	N/A	N/A	-42
Coil Resistance ±10%	18Ω	70Ω	290Ω	290Ω

Catalog 5-1773450-5
Revised 3-13

www.te.com

Dimensions are shown for reference purposes only. Specifications subject to change.

Dimensions are in millimeters unless otherwise specified.

USA: +1 800 522 6752
Asia Pacific: +86 0 400 820 6015
UK: +44 800 267 666

For additional support numbers please visit www.te.com

FCAC-150 Series, 50 Amps, 1PST/NO (DM) with 1PDT Auxiliary Contacts (Continued)

Specifications

Electrical Data	
Initial Insulation Resistance (note 1)	100 megohms, minimum, at 500Vdc, between each pin and case
Insulation Resistance After Life or Environmental Test (note 1)	50 megohms, minimum, at 500Vdc, between each pin and case
Dielectric Strength At Sea Level	
Contacts to Ground and Between Contacts	1,250Vrms, 60 Hz.
Coil to Ground	1,000Vrms, 60 Hz.
Dielectric Strength at 80,000 ft (25,000m), All Points (note 4)	500Vrms, 60 Hz
Environmental Data	
Ambient Temperature Range, Operating	-70°C to +125°C
Altitude	300,000 feet
Shock Resistance	50 G's, 11 ms.
Vibration Resistance, Sinusoidal	20 G's, 75-3000Hz.
Mechanical Data	
Approximate Weight	3.2 oz. (90g) Max.

NOTES

1. All wired terminals must be connected together during this test. Dielectric withstanding voltage and insulation resistance are measured between all mutually insulated wired terminals and between all these terminals and case.

Terminals

CODE "B"

Solder Pin Terminals
Tin/Lead Plated

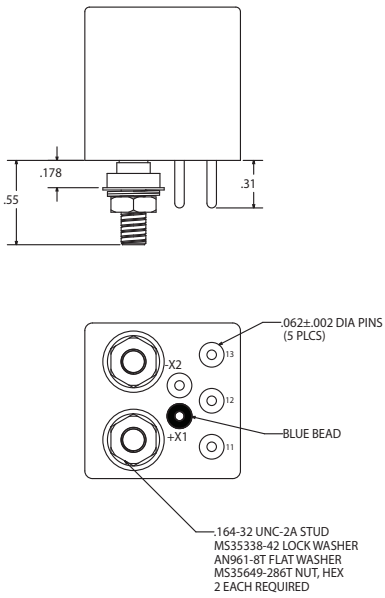

CODE "C"

Solder Hook Terminals
Tin/Lead Plated

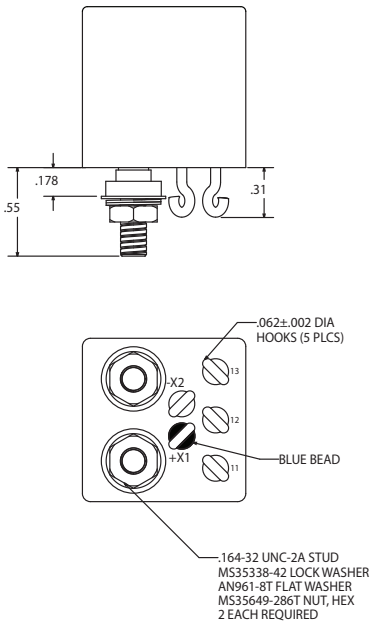

CODE "K"

Terminal Shield

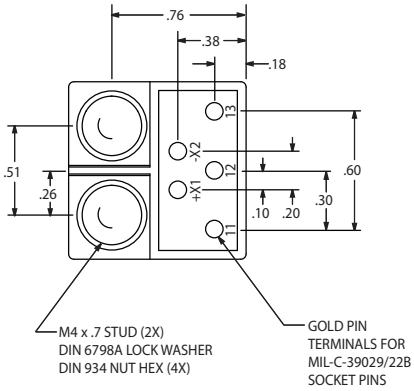

Dimensions are shown for reference purposes only. Specifications subject to change.

Dimensions are in millimeters unless otherwise specified.

USA: +1 800 522 6752
Asia Pacific: +86 0 400 820 6015
UK: +44 800 267 666

For additional support numbers please visit www.te.com

FCAC-150 Series, 50 Amps, 1PST/NO (DM) with 1PDT Auxiliary Contacts (Continued)

Outline Dimensions

The standard terminal types and enclosures are illustrated below with dimensions in inches ± 0.010 and (millimeters ±0.25).

Enclosures

CODE "U"

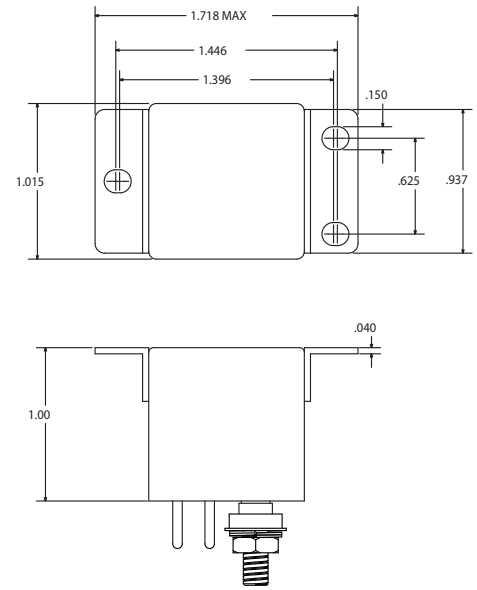

CODE "Y"

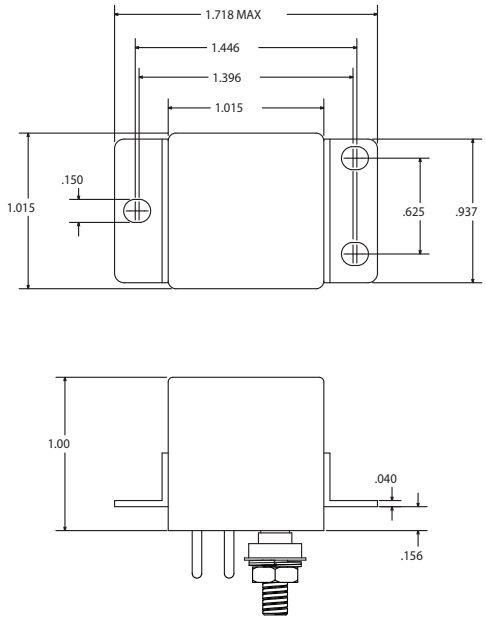

CODE "X"

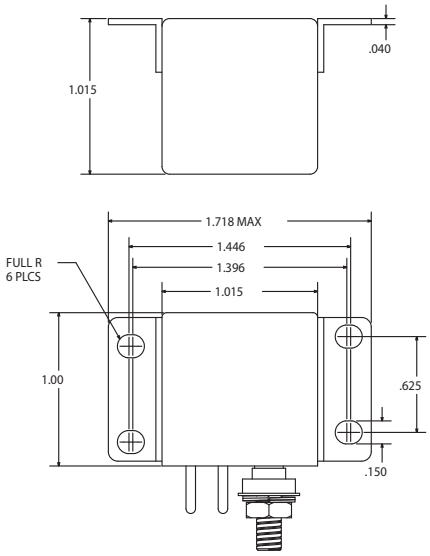

CODE "R"

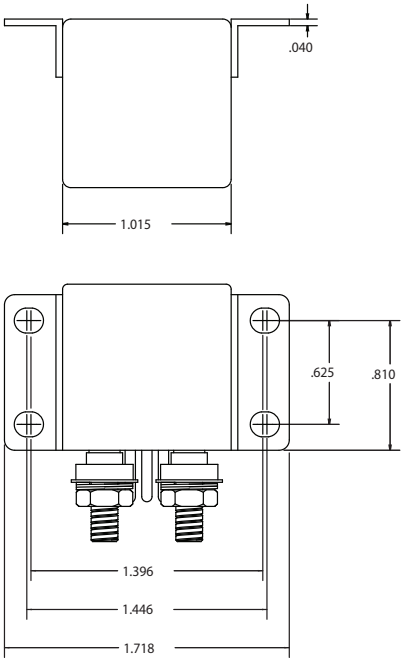

Dimensions are shown for reference purposes only. Specifications subject to change.

Dimensions are in millimeters unless otherwise specified.

USA: +1 800 522 6752
Asia Pacific: +86 0 400 820 6015
UK: +44 800 267 666

For additional support numbers please visit www.te.com

FCAC-150 Series, 50 Amps, 1PST/NO (DM) with 1PDT Auxiliary Contacts (Continued)

Terminal Wiring

DC Coils

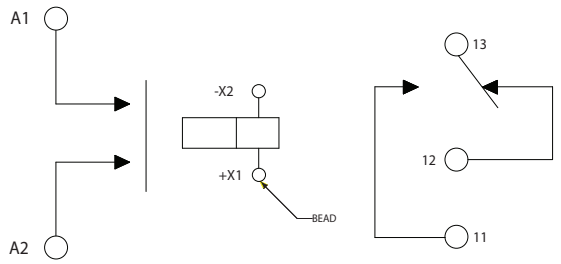

DC Coils with Transient Suppression

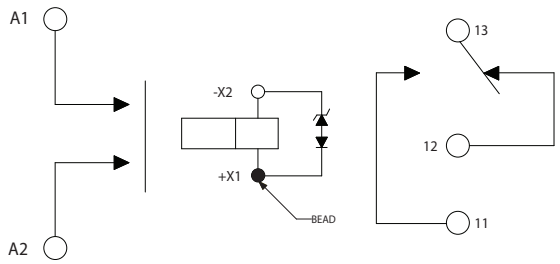

NOTE: Polarity must be observed with DC coil supply. Relay is polarized with a permanent magnet and will not operate or be damaged by reverse polarity.

Diodes used in transient suppression and in AC rectifier circuits have peak inverse voltage rating of 600 VDC minimum. Zener diodes have a minimum rating of 1 watt.

Terminal designations are for reference only and do not appear on the header.

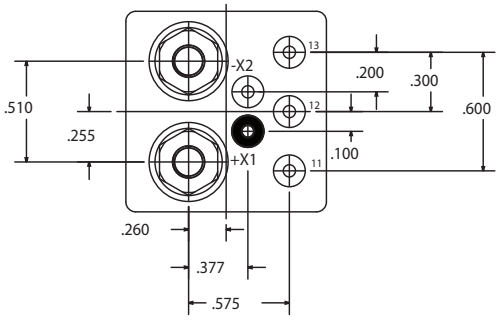

TERMINAL VIEW

How to Order

Typical Part Number	FCAC-150	B	Y	3

Series and Contact Arrangement:
FCAC-150 = Relay with 1 Form X Main Contacts, 1 Form C Aux. Contacts

Terminals (see drawings for details):
B = Solder Pin Coil Terminals, Stud Power Terminals
C = Solder Hook Coil Terminals, Stud Power Terminals
K = Terminal Block, Stud Power Terminals

Enclosure (see drawings for details):
R = Horizontal Flange Mount, Rotated
U = Flush Vertical Flange Mount
X = Horizontal Flange Mount
Y = Raised Vertical Flange Mount
Z = No Mount

Coil:
1 = 6Vdc nominal
2 = 12Vdc nominal
3 = 28Vdc nominal
4 = 28Vdc nominal, with back EMF suppression

Catalog 5-1773450-5
Revised 3-13

www.te.com

Dimensions are shown for reference purposes only. Specifications subject to change.

Dimensions are in millimeters unless otherwise specified.

USA: +1 800 522 6752
Asia Pacific: +86 0 400 820 6015
UK: +44 800 267 666

For additional support numbers please visit www.te.com

Selection and Application Guide

This selection and application guide is suggested practices from ARP (Aerospace Recommended Practice) 4005 Concerning proper performance of relays.

Caution:
The use of any coil voltage less than the rated coil voltage may compromise the operation of the relay. Choosing the proper relay depends primarily on matching the relay to the load, power supply, and environment. Selection should be limited to items that meet the following requirements:

A. **Contacts** must be rated for the load. Current rating, type of load (resistive, lamp, motor, inductive, and so forth), impedance range, voltage rating, DC or AC, frequency, single phase or polyphase, polyphase load balance, and type of switching or transfer should all be considered. Each of the following switching and transfer functions places a different requirement on each of the relay contacts and must be considered when selecting a relay with the proper contact rating:
(1) On-Off Switching - DC, single phase or polyphase
(2) Motor Reversing (AC or DC)
(3) Transferring load between phases of same source
(4) Transferring load between unsynchronized AC sources

B. **Power supply characteristics** must be taken into account. Voltage regulation, variations in frequency, ripples and spikes, as well as steady state conditions, should be included. If more than one power supply is involved, not only must each be suitable but interaction between them also should be investigated.

C. **Coil (or coils)** should be rated so as to have proper operation under all anticipated conditions.

D. **Consideration of environmental conditions** anticipated throughout the service of life, as well as those expected during storage and transportation before installing the relays in equipment, is mandatory. Electrical parameters, environmental factors, mechanical stresses, and compatibility are among the categories for which the relay must be reviewed.

E. **The circuit in which the relay is used,** the interlocking feature employed, the wiring harness, and the associated components should all be reviewed for assuring mutual suitability.

F. **Relays should be hard wired** whenever possible, to avoid the need for additional contact points associated with the relay plug-in socket arrangement. (Plug-in types should be considered for quick turnaround times).

G. **To permit "safe" isolation** of relay circuit in the OFF condition, and better eliminate an electrical shock hazard, an electromechanical switching device should be placed between the positive terminal of the power source and relay coil.

H. **Proper transistor control** of the relay coil requires a stable |reference voltage. This can be done by connecting the plus side of the coil to the positive side of the power source, the minus side of the relay coil to the collector of an NPN transistor, the emitter of the transistor to the grounded side of the power source, and the transistor base to the control voltage. For example, see MIL-R-28776/1.

I. **Any switching device** controlling the relay coil circuit must be capable of withstanding, without damage, the sum of the maximum coil circuitry voltage and the peak value of transient voltage that results when the coil circuit is opened; for example, a switch controlling a relay coil that is supplied with a 28V DC line and subjected to a transient voltage suppressed to 42V must be capable of withstanding 28V + 42V or a 70V surge without damage.

J. **In selecting solid state electronic switching devices** to control relay coil circuits, care must be used in selecting a solid state device with a leakage current (in the "off state") that is sufficiently low to permit the relay to drop out.

K. **Control of the relay coil circuit** by other than step-function switching may invalidate published relay performance properties such as pickup and dropout voltages, pickup, dropout, and bounce times.

Catalog 5-1773450-5
Revised 3-13

www.te.com

Dimensions are shown for reference purposes only. Specifications subject to change.

Dimensions are in millimeters unless otherwise specified.

USA: +1 800 522 6752
Asia Pacific: +86 0 400 820 6015
UK: +44 800 267 666

For additional support numbers please visit www.te.com

Cross Reference - Socket to Relay

NOTE:
TE Connectivity Does Not Manufacture Relay Sockets.

This Socket to Relay cross reference is provided for additional design assistance. Several of TE Authorized Distributors carry relay sockets for your convenience. Relay sockets come with a variety of profiles, mounting styles, and mounting hardware options, so please contact the relay socket supplier of your choice or one of our Authorized Distributors who carry relay sockets for additional information.

Military Socket P/N	Relay Part Number	Relay Type
M12883/40-01 M12883/40-05 M12883/40-07 M12883/40-11 M12883/40-13 M12883/40-17 M12883/40-19 M12883/40-23	M83536/15-022 M83536/16-006, 014, 031, 034	4 Pole, 10 Amp
M12883/40-02 M12883/40-08 M12883/40-14 M12883/40-20	FCA-410-DY8 (Catalog Version) FCA-410-DY9 (Catalog Version)	4 Pole, 10 Amp, AC
M12883/41-01 M12883/41-04 M12883/41-06 M12883/41-09 M12883/41-11 M12883/41-14 M12883/41-16 M12883/41-19	M83536/9-006, 015, 024, 035 M83536/10-006, 015, 024, 034, 038	2 Pole, 10 Amp
M12883/41-02 M12883/41-07 M12883/41-12 M12883/41-17	FCA-210-DY8 (Catalog Version) FCA-210-DY9 (Catalog Version)	2 Pole, 10 Amp, AC
M12883/44-01	M83536/5-006, 014, 022, 030 M83536/6-006, 014, 022, 032	4 Pole, 5 Amp
M12883/45-01	M83536/1-006, 015, 024, 033 M83536/2-006, 015, 024, 035	2 Pole, 5 Amp
M12883/47-01 M12883/47-04 M12883/47-07 M12883/47-10	FCA-610-AY3 (Catalog Version) FCA-610-AY4 (Catalog Version)	6 Pole, 10 Amp
M12883/47-02 M12883/47-05 M12883/47-08 M12883/47-11	FCA-610-DY8 (Catalog Version)	6 Pole, 10 Amp AC
M12883/48-01 M12883/48-02 M12883/48-03 M12883/48-04	M83536/32-003L M83536/33-003L	3 Pole, 25 Amp
M12883/48-05 M12883/48-06 M12883/48-07 M12883/48-08	FCA-325-AV8 (Catalog Version) FCA-325-AV9 (Catalog Version)	3 Pole, 25 Amp AC
M12883/52-01	M83536/2-028	2 Pole, 5 Amp Track Mount
M12883/52-02	M83536/6-025	4 Pole, 5 Amp Track Mount
M12883/55-01 M12883/55-02	M6106/19-004, 007, 012, 017, 022	1 Pole, 25 Amp

Catalog 5-1773450-5
Revised 3-13

www.te.com

Dimensions are shown for reference purposes only. Specifications subject to change.

Dimensions are in millimeters unless otherwise specified.

USA: +1 800 522 6752
Asia Pacific: +86 0 400 820 6015
UK: +44 800 267 666

For additional support numbers please visit www.te.com

Engineering Notes

Catalog 5-1773450-5
Revised 3-13

www.te.com

Dimensions are shown for reference purposes only. Specifications subject to change.

Dimensions are in millimeters unless otherwise specified.

USA: +1 800 522 6752
Asia Pacific: +86 0 400 820 6015
UK: +44 800 267 666

For additional support numbers please visit www.te.com

Table of Contents

AC Contactors (115/208 Volt 400 Hz unless otherwise noted)

25 Ampere

DH-14 and DHR-14 Series, 3PDT, Latching . . . . . .6-6 – 6-8

30 Ampere

DHR-18 Series, 3PDT, Latching 6-9

50 Ampere

D7, DH7, DHR7, DR7 Series, 3PDT and 3PST NO . . . . . .6-10 – 6-15

D18, DH18 and DHR18 Series, 3PDT, Center Off . . . . . .6-16 – 6-18

BH-316 Series, 3PST NO, Double Break . . . . . .6-19 – 6-21

60 Ampere

B-138 Series, TPST NO and TPDT NC 6-22, 6-23

B-140 Series, 3PDT NO, Center Off 6-24, 6-25

DH-7 Series, 3PDT 6-26

100 Ampere

D25, DH25 and DHR25 Series, 3PDT . . . . . .6-27 – 6-29

120 Ampere

D25 and DH25 Series, 3PST NO, Latching 6-30, 6-31

D31 Series, 3PDT, Center Off 6-32

D31, DH-31 and DHL-31 Series, 3PDT, Center Off . . . . . .6-33 – 6-35

125 Ampere

D-25 Series, 3PDT, Side Stable 6-36

130 Ampere

B-309 Series, 3PST NO, Single Break 6-37

175 Ampere

B-451 Series, 3PDT, Latching 6-38

B-312 Series, 3PST NO, Double Break 6-39, 6-40

KA175 Series, 3PST NO Side Stable 6-41

SA136F Series, 3PST NO, Double Break 6-42

200 Amperes

B-312 Series, 3PST NO, Double Break 6-43

B-393 Series, 3PDT, Center Off, Double Break 6-44

260/350 Amperes

B-429 Series, 3PST NO, Double Break . . . . . .6-45 – 6-47

275 Amperes

B-430 Series, 3PST, Double Break, Latching 6-48, 6-49

500 Amperes

B-484 Series, 3PDT, Latching 6-50, 6-51

Cross Reference 6-52, 6-53

Table of Contents (Continued)

Lightweight High Performance DC Contactors

Introduction 6-54

200 Amperes

K Series, SPST NO, Double Break . . . . . .6-55 – 6-57

400 Amperes

K Series, SPST NO, Double Break . . . . . .6-58 – 6-61

500 Amperes

K Series, SPST NO, Double Break . . . . . .6-62 – 6-64

K Series, 500 Amps, 28 Vdc 6-64

1000 Amperes

K-1000 Series, SPST NO, Double Break 6-65

Cross Reference 6-66

DC Contactors (28 Vdc unless otherwise noted)

25 Amperes

DH-14 and DH-21 Series, SPDT, 1NO, 1NC, Double Break . . . . . .6-67 – 6-69

50 Amperes

D-7, DH-7 and DH-18 Series, 2SPST, 1NO, 1NC, Latching . . . . . .6-70 – 6-73

100 Amperes

A-1077 Series, SPST NO (DD Series), SPDT (S Series) 6-74, 6-75

D-31 Series, SPDT, Center Off, Double Break 6-76

D-32A Series, 2PST, Center Off 6-77

DH-25 Series, SPDT 1 NO, 1NC, Double Break 6-78

DHR-31BA Series, SPDT, Center Off 6-79

200 Amperes

A1077 Series, SPDT NO, Double Break or SPDT Double Break . . . . . .6-80 – 6-82

A876 Series, SPST NC, Double Break 6-83

230 Amperes

A1077 Series, SPST NO, Double Break, or SPDT Double Break 6-84

300 Amperes

A-770 and AR-770 Series, SPST NO, Double Break . . . . . .6-85 – 6-89

A-848 Series, SPST NO, DPST NC, Double Break, 24/48 Vdc 6-90

A-848 Series, DPST NO, Double Break, 28 Vdc . . . . . .6-91 – 6-92

AH-965 Series, SPDT, Double Break 6-93, 6-94

400 Amperes

A-400 Series, SPST NO, Double Break . . . . . .6-95 – 6-99

A-703 and AH-703 Series, SPST NO, Double Break . . . . . .6-100 – 6-104

A-981 Series, SPDT, Double Break 6-105, 6-106

Table of Contents (Continued)

DC Contactors (continued)

500 Amperes

A-792 Series, SPST NO, Quad. Break 6-107

600 Amperes

A-712 Series, SPDT NO, Double Break 6-108, 6-109

A-882 Series, 2PDT, Double Break 6-110

A-931 Series, SPST NC, Double Break 6-111

A-981 Series, SPST NC, Double Break or 1PST NO, 1PST NC 6-112, 6-113

Cross Reference . . . . . .6-114 – 6-116

Sensors and Protective Devices

AC Low Voltage Warning Relay

E-328-2 Series, DPDT 6-117

Battery Contactor

A-772 Series, SPST NO 6-118

Current Sensor, 25 AMP Single Phase 400 Hz

E-387 Series, SPDT 6-119

Cutout, Reverse Current 100 Amp

A-700 Series, SPST NO 6-120

Cutout, Reverse Current, 200 Amps

A-700 Series, SPST NO 6-121

Cutout, Reverse Current, 300 Amperes

A-700 Series, SPST NO 6-122, 6-123

Cutout, Reverse Current, 400 Amperes

A-701 Series, SPST NO, Double Break 6-124, 6-125

Cutout, Reverse Current, 600 Amperes

A-702 Series, SPST NO 6-126

Monitor, External Power, 3 Phase, 400 Hz

B-188 Series, SPST 6-127

Relay, Automatic Dropout, 600 Amperes

A-711 Series, SPST NO, Double Break 6-128, 6-129

Relay, Automatic Cutout, 200 Amperes

A-957 Series, SPST NO, Double Break 6-130

Relay, Automatic Cutout, 300 Amperes

A-957 Series, SPST NO, Double Break 6-131

Relay, Automatic Cutout, 350 Amperes

A-957 Series, SPST NO, Double Break 6-132

Table of Contents (Continued)

Relay, Current Indicator, 2 Amperes
Q-50 Series, SPST NC 6-133
Relay, Current Indicator, 3.5 Amperes
Q-50 Series, SPDT 6-134
Relay, Current Indicator, 6.25 Amperes
Q-50 Series, SPST NC 6-135
Relay, Current Indicator, 10 Amperes
Q-50 Series, SPST NO 6-136
Relay, Current Indicator, 15 Amperes
Q-50 Series, SPST 6-137
Relay, Current Indicator, 16 Amperes
Q-50 Series, SPST NC 6-138
Relay, Current Indicator, 20 Amperes
Q-50 Series, SPST NC or SPST NO 6-139, 6-140
Relay, AC Current Indicator, 5 Amperes
QR-50 Series, SPST NC 6-141
Relay, AC Current Indicator, 15 Amperes
QR-50 Series, SPST 6-142
Relay, Undervoltage AC 3 Phase, 10 Amperes
E-316C Series, DPDT 6-143
Relay, Undervoltage, Time Delay, 10 Amperes
E-311PB Series, 2PDT 6-144
Relay, Voltage Sensing, 10 Amperes
E-329 Series, 3PDT 6-145
Remote Power Controller, 100 Amperes
RA-3100 Series, 3PST NO 6-146
Remote Power Controller, 110 Amperes
RA-3100 Series, 3PST NO 6-147
Remote Power Controller, 60 Amperes
RA-3100 Series, 3PST NO 6-148
Remote Power Controller, 70 Amperes
RA-3100 Series, 3PST NO 6-149
Undervoltage Sensor, 10 Amperes
E-308TA Series, DPDT 6-150
Cross Reference 6-151, 6-152

Catalog 5-1773450-5
Revised 3-13

www.te.com

Dimensions are shown for reference purposes only. Specifications subject to change.

Dimensions are in millimeters unless otherwise specified.

USA: +1 800 522 6752
Asia Pacific: +86 0 400 820 6015
UK: +44 800 267 666

For additional support numbers please visit www.te.com

Engineering Notes

Catalog 5-1773450-5
Revised 3-13

www.te.com

Dimensions are shown for reference purposes only. Specifications subject to change.

Dimensions are in millimeters unless otherwise specified.

USA: +1 800 522 6752
Asia Pacific: +86 0 400 820 6015
UK: +44 800 267 666

For additional support numbers please visit www.te.com

DH-14 and DHR-14 Series Contactors, Rated up to 25 Amps, 115/200 VAC, 400 Hz

Product Facts

- **3PDT**
- **Hermetically sealed**
- **Auxiliary contacts available**
- **Meets many requirements of MIL-PRF-6106**

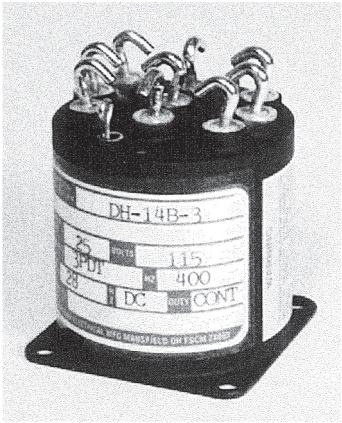

Performance Data

Electrical Characteristics

Contact Arrangement — 3PDT

Rated Operating Voltage — 115/200 VAC, 400 Hz

Resistive Rating — 25 Amps

Inductive Rating — 20 Amps

Motor Rating — 15 Amps

General Characteristics

Temperature Range — -55°C to +71°C

Operating Cycles (Life) at Rated Resistive Load, Min. — 50,000 cycles

Operating Cycles (Life) Mechanical, Min. — 100,000 cycles

Dielectric Strength —
All Circuits to Ground — 1,500 Vrms
Circuit to Circuit — 1,500 Vrms
Coil to Ground and Aux. Contacts — 1,000 Vrms

Insulation Resistance, Initial — 100 megohm min.

Altitude — 80,000 ft.

Weight, Max. — .41 to .50 lbs

Duty Cycle —
VAC 400 Hz — AC Continuous (Type A, See diagram below)
Vdc — Continuous or continuous with suppression (See diagram B & C below)

Operating Voltage, Nom. —
VAC 400 Hz — 115 VAC
Vdc — 28 Vdc

Pickup Voltage @ 25°C, Max. —
VAC 400 Hz — 95 VAC
Vdc — 18 Vdc

Dropout Voltage @ 25°C, Max. —
VAC 400 Hz — 25 VAC
Vdc — 1.5 to 7 Vdc

Coil Resistance ±20% @ 25°C —
VAC 400 Hz — N/A
Vdc — 290 Ohms

Coil Characteristics

Coil Type

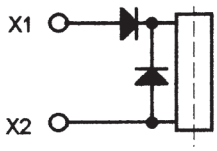

A — AC Continuous

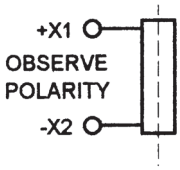

B — Continuous

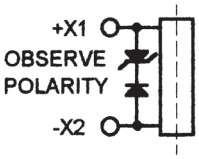

C — Continuous with Suppression

For factory-direct application assistance, phone 419-521-9500 or fax 419-526-2749.

Catalog 5-1773450-5
Revised 3-13

www.te.com

Dimensions are shown for reference purposes only. Specifications subject to change.

Dimensions are in millimeters unless otherwise specified.

USA: +1 800 522 6752
Asia Pacific: +86 0 400 820 6015
UK: +44 800 267 666

For additional support numbers please visit www.te.com

DH-14 and DHR-14 Series Contactors, Rated up to 25 Amps, 115/200 VAC, 400 Hz (Continued)

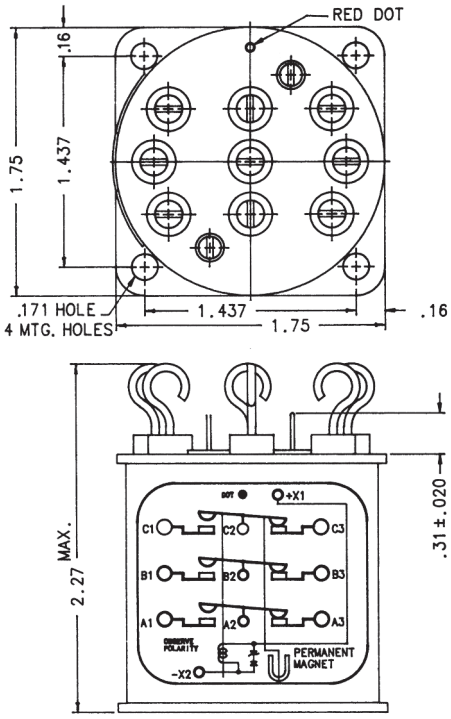

Mounting Style A

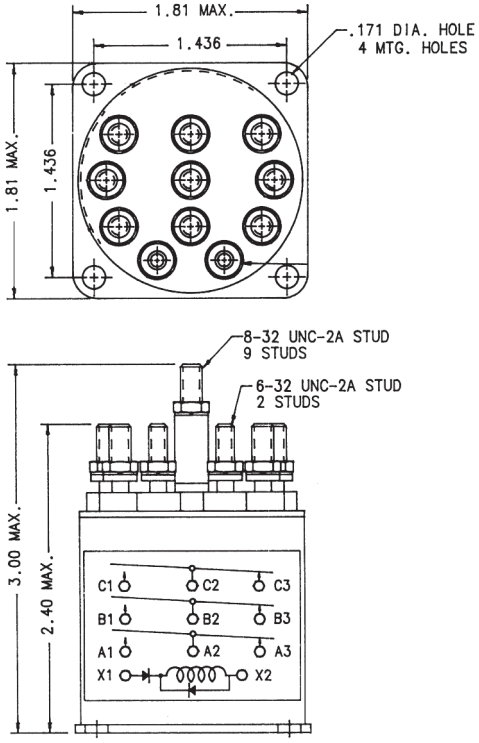

Mounting Style B

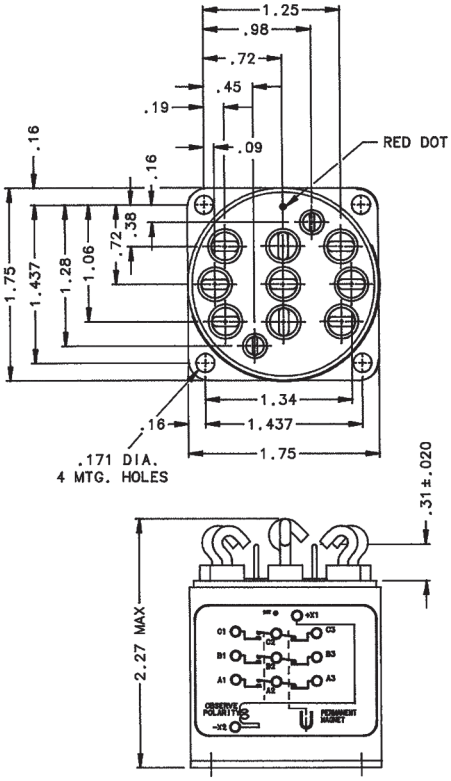

Mounting Style C

For factory-direct application assistance, phone 419-521-9500 or fax 419-526-2749.

DH-14 and DHR-14 Series Contactors, Rated up to 25 Amps, 115/200 VAC, 400 Hz (Continued)

Circuit Configurations (Consult factory for other available circuit configurations)

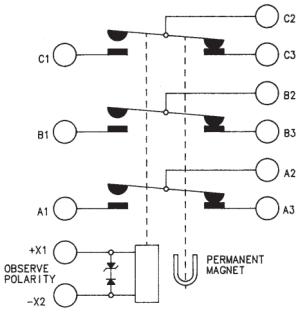

Circuit Configuration 1

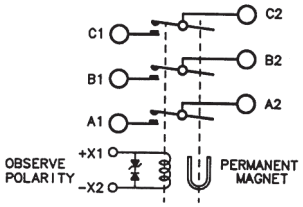

Circuit Configuration 2

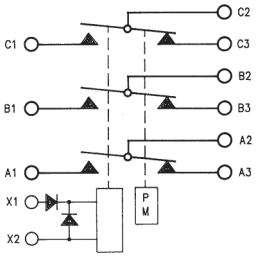

Circuit Configuration 3

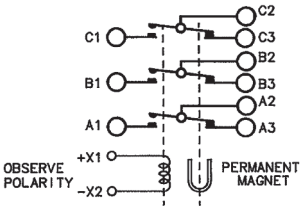

Circuit Configuration 4

HARTMAN Part Number	Construction Type	Mounting Style	Coil Type	Circuit Config.	TE Connectivity Part Number
DH-14B	Hermetically Sealed	C	B	4	1-1616522-4
DH-14B-3	Hermetically Sealed	A	C	1	1616037-1
DH-14CE	Hermetically Sealed	A	C	2	1616017-1
DHR-14B	Hermetically Sealed	A	A	3	1-1616037-2
DHR-14BA	Hermetically Sealed	B	A	3	1-1616037-3

For factory-direct application assistance, phone 419-521-9500 or fax 419-526-2749.

DHR-18 Series, Rated up to 30 Amps, 115 VAC, 400 Hz

Product Facts

- **3PDT, Center off**
- **Hermetically sealed**

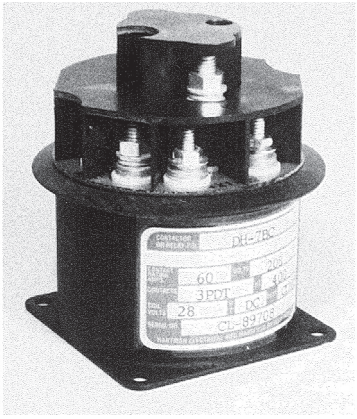

Performance Data

Electrical Characteristics

Contact Arrangement — 3PDT, Center Off

Rated Operating Voltage — 115 VAC, 400 Hz

Resistive Rating — 30 Amps

Inductive Rating — 20 Amps

General Characteristics

Operating Temperature — 71°C

Weight, Max. — 14 oz.

Coil Characteristics

Duty Cycle — Continuous

Coil Rating — 115 VAC, 400 Hz

Pickup Voltage, Max. — 90 Vdc, Hot

Dropout Voltage — 45 ± 20 Vdc

Current at 115 Vdc & 25°C — 0.28 Amp max.

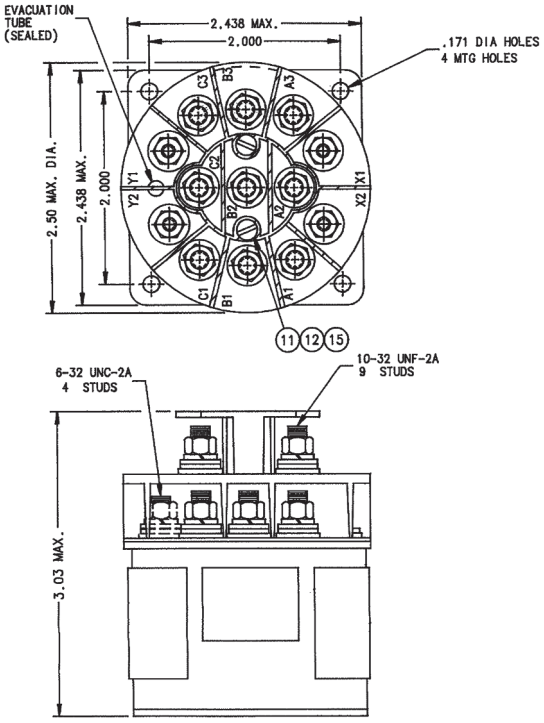

Mounting Style A

Circuit Configurations (Consult factory for other available circuit configurations)

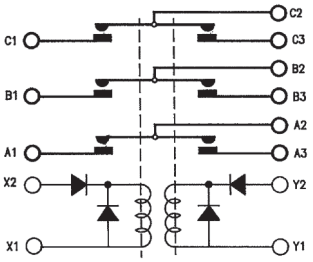

Circuit Configuration 1

For factory-direct application assistance, phone 419-521-9500 or fax 419-526-2749.

HARTMAN Part Number	Construction Type	Mounting Style	Coil Type	Circuit Config.	TE Part Number
DHR-18-1	Hermetically Sealed	A	Continuous	1	1616050-9

Catalog 5-1773450-5
Revised 3-13

www.te.com

Dimensions are shown for reference purposes only. Specifications subject to change.

Dimensions are in millimeters unless otherwise specified.

USA: +1 800 522 6752
Asia Pacific: +86 0 400 820 6015
UK: +44 800 267 666

For additional support numbers please visit www.te.com

D7, DH7, DHR7, DR7 Series, Rated up to 50 Amps, 115/200 VAC, 400 Hz

Product Facts

- 3PDT and 3PST NO
- Gasket sealed or Hermetically sealed
- Auxiliary contacts available
- Meets many requirements of MIL-PRF-6106

Performance Data

Electrical Characteristics

Contact Arrangement — 3PDT and 3PST NO

Rated Operating Voltage — 115/200 VAC, 400 Hz, 3 phase

Resistive Rating — 50 Amps

Inductive Rating — 50 Amps

Motor Rating — 30 Amps

Lamp Rating — 15 Amps

General Characteristics

Temperature Range — -55°C to +71°C

Operating Cycles (Life) at Rated Resistive Load, Min. — 50,000 cycles

Operating Cycles (Life) Mechanical, Min. — 100,000 cycles

Dielectric Strength —
All Circuits to Ground — 1,500 Vrms
Circuit to Circuit — 1,500 Vrms
Coil to Ground and Aux. Contacts — 1,000 Vrms

Insulation Resistance, Initial — 100 megohm min.

Altitude —
D7, DR7 — 50,000 ft
DH7, DHR7 — 80,000 ft

Weight, Max. — .94 to 1.20 lbs

Coil Characteristics

Duty Cycle —
VAC 400 Hz — AC Continuous (Type A & E, See diagram below)
Vdc — Continuous (Type B, See diagram below)
Vdc — Continuous with suppression (Type C & D, See diagram below)

Operating Voltage, Nom. —
VAC 400 Hz — 115 VAC
Vdc — 28 Vdc

Pickup Voltage @ 25°C, Max. —
VAC 400 Hz — 75 VAC
Vdc — 18 Vdc

Dropout Voltage @ 25°C, Max. —
VAC 400 Hz — 12 to 38 VAC
Vdc — 1 to 7 Vdc

Coil Resistance ±20% @ 25°C —
VAC 400 Hz — 505 Ohms
Vdc — 126 Ohms

Coil Current @ 25°C, Max. —
VAC 400 Hz — .065 Amp
Vdc — .28 Amp

Coil Type

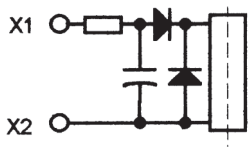

A — AC Continuous

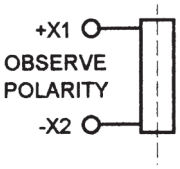

B — Continuous

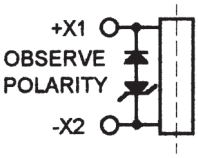

C — Continuous with Suppression

D — Continuous with Suppression

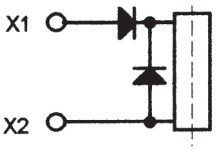

E — AC Continuous

For factory-direct application assistance, phone 419-521-9500 or fax 419-526-2749.

Catalog 5-1773450-5
Revised 3-13

www.te.com

Dimensions are shown for reference purposes only. Specifications subject to change.

Dimensions are in millimeters unless otherwise specified.

USA: +1 800 522 6752
Asia Pacific: +86 0 400 820 6015
UK: +44 800 267 666

For additional support numbers please visit www.te.com

D7, DH7, DHR7, DR7 Series, Rated up to 50 Amps, 115/200 VAC, 400 Hz (Continued)

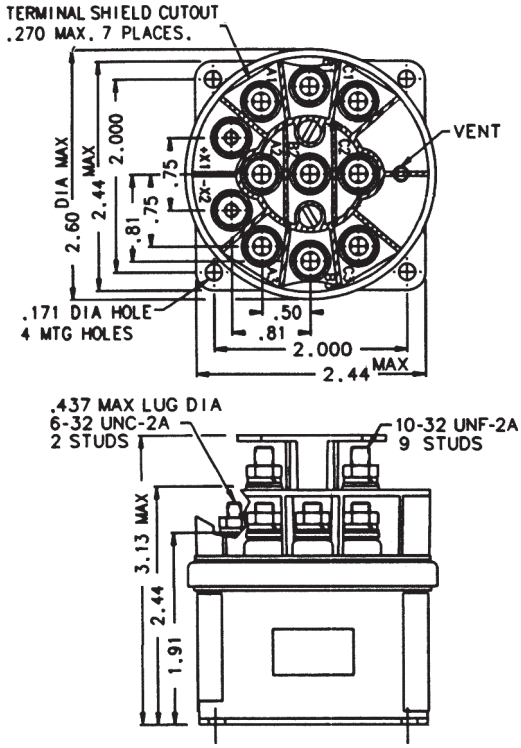

Mounting Style A

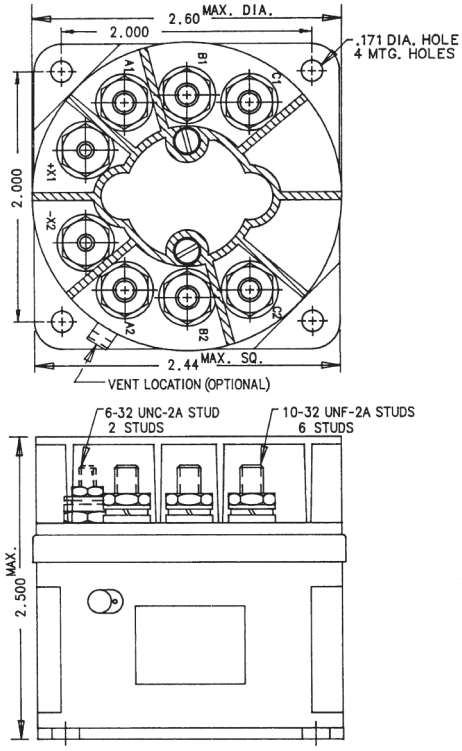

Mounting Style B

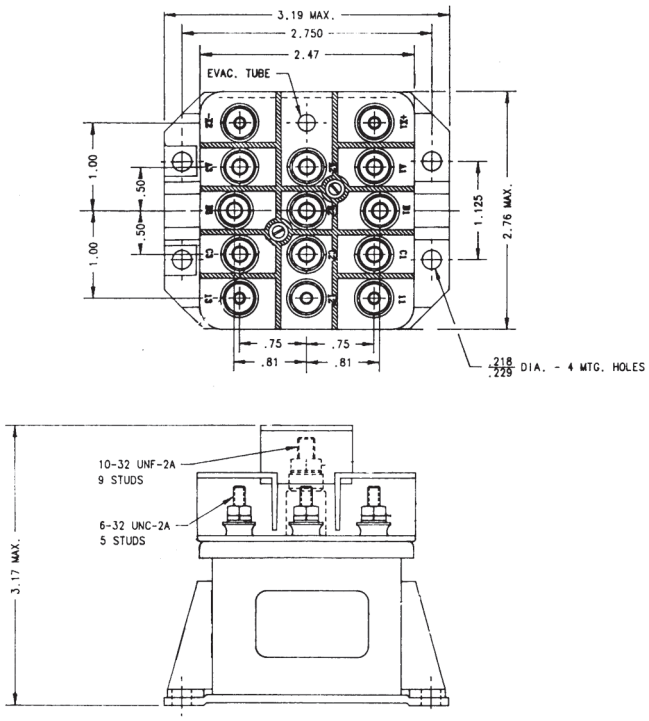

Mounting Style C

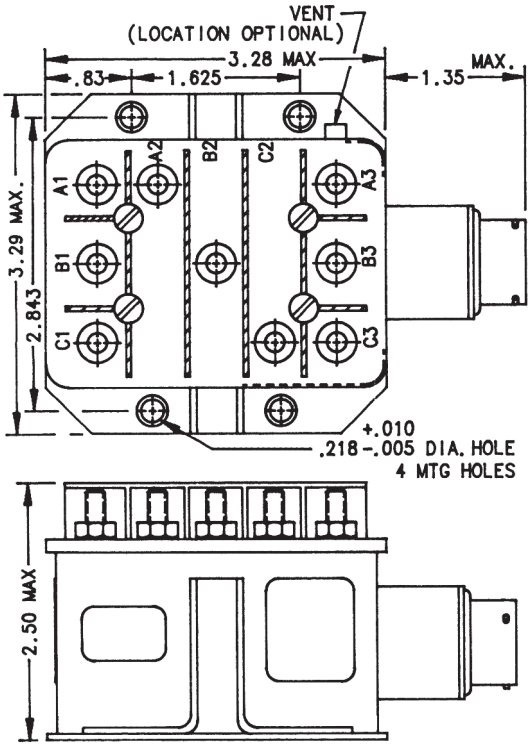

Mounting Style D

For factory-direct application assistance, phone 419-521-9500 or fax 419-526-2749.

D7, DH7, DHR7, DR7 Series, Rated up to 50 Amps, 115/200 VAC, 400 Hz (Continued)

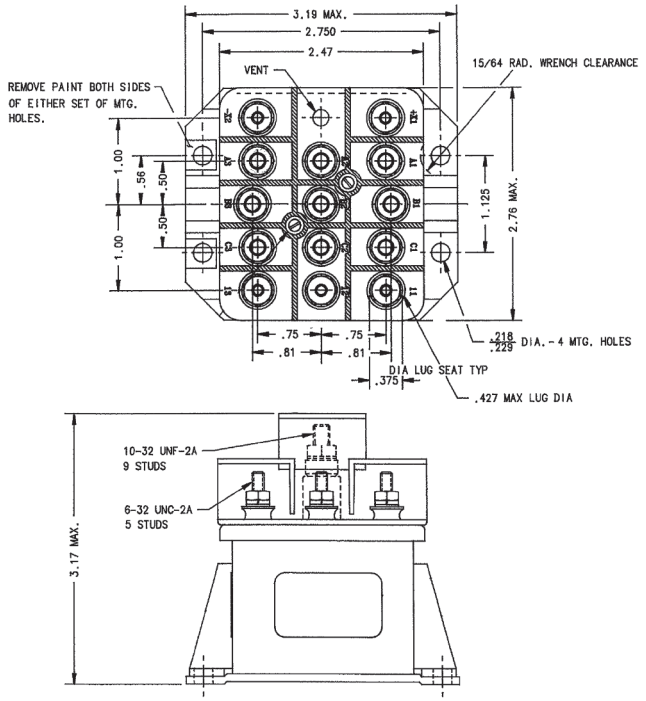

Mounting Style E

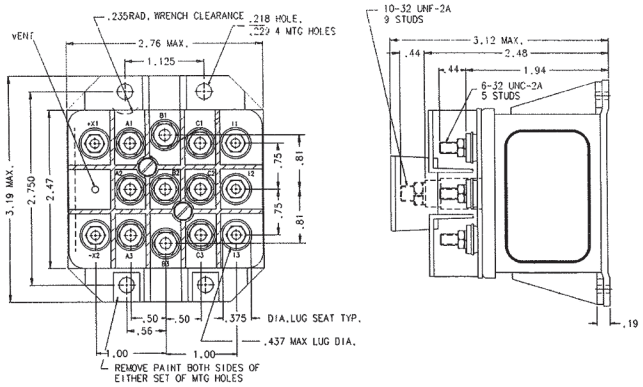

Mounting Style F

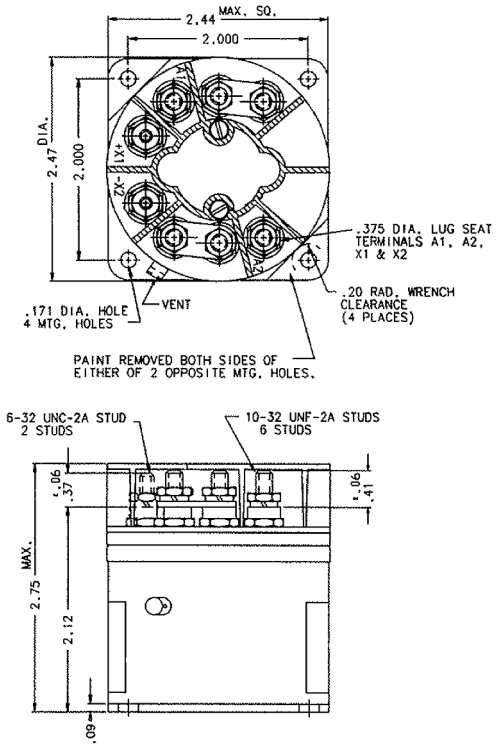

Mounting Style G

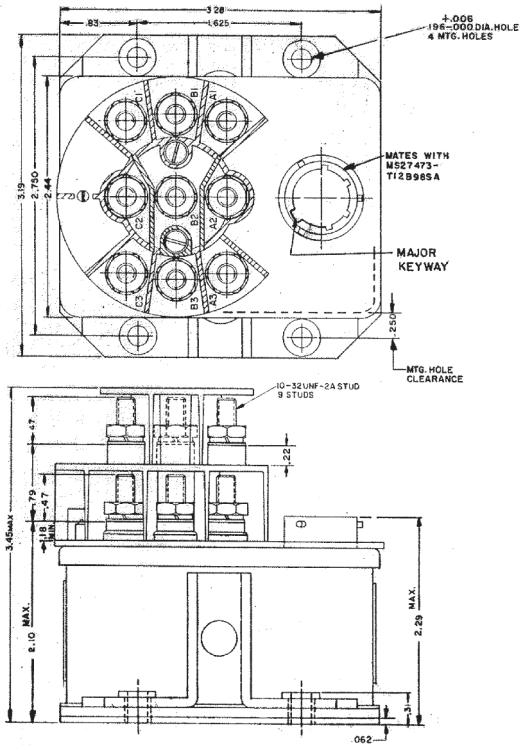

Mounting Style H

For factory-direct application assistance, phone 419-521-9500 or fax 419-526-2749.

Dimensions are shown for reference purposes only. Specifications subject to change.

Dimensions are in millimeters unless otherwise specified.

USA: +1 800 522 6752
Asia Pacific: +86 0 400 820 6015
UK: +44 800 267 666

For additional support numbers please visit www.te.com

D7, DH7, DHR7, DR7 Series, Rated up to 50 Amps, 115/200 VAC, 400 Hz (Continued)

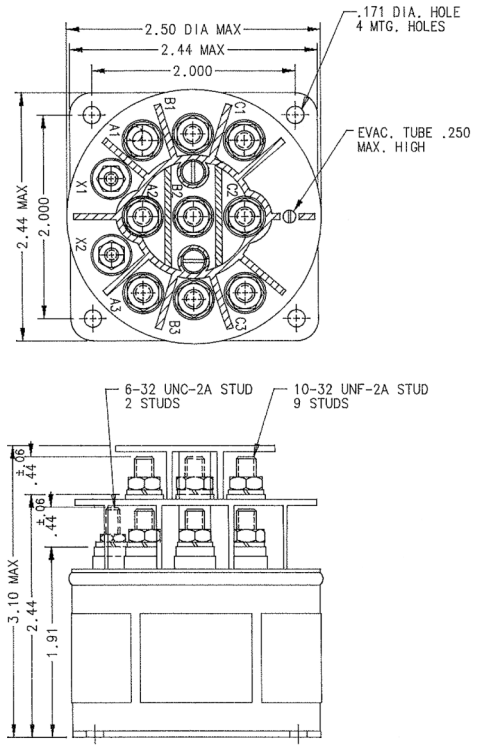

Mounting Style I

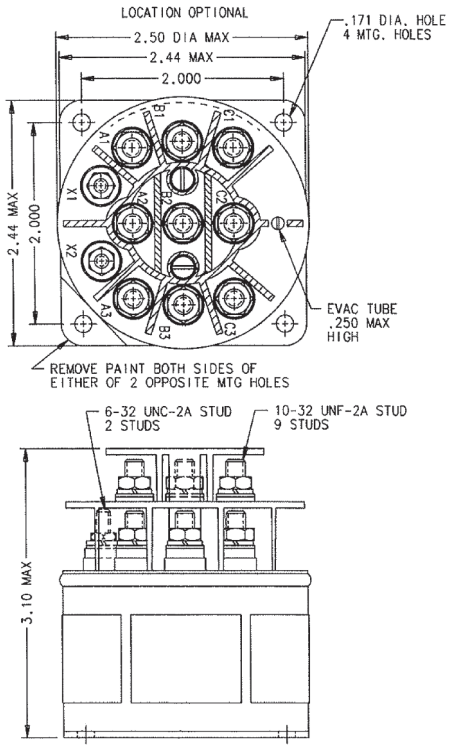

Mounting Style J

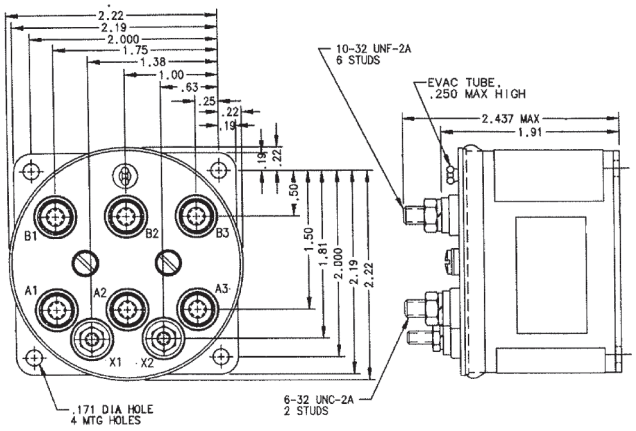

Mounting Style K

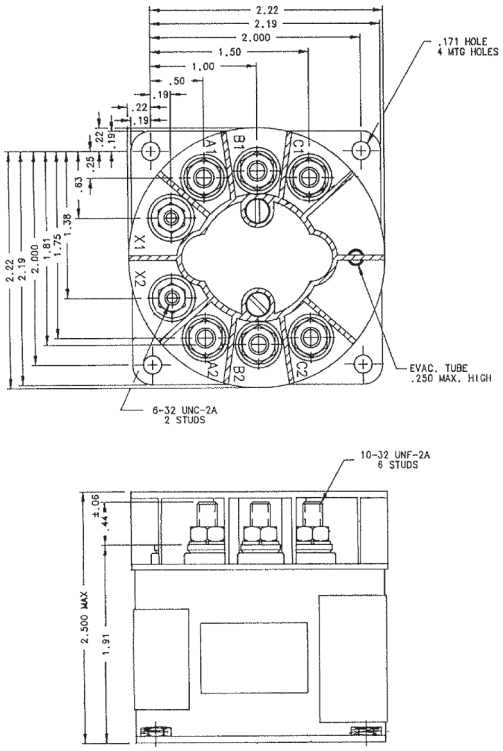

Mounting Style L

For factory-direct application assistance, phone 419-521-9500 or fax 419-526-2749.

Dimensions are shown for reference purposes only. Specifications subject to change.

Dimensions are in millimeters unless otherwise specified.

USA: +1 800 522 6752
Asia Pacific: +86 0 400 820 6015
UK: +44 800 267 666

For additional support numbers please visit www.te.com

D7, DH7, DHR7, DR7 Series, Rated up to 50 Amps, 115/200 VAC, 400 Hz (Continued)

Circuit Configurations (Consult factory for other available circuit configurations)

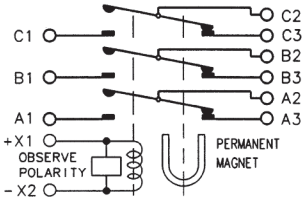

Circuit Configuration 1

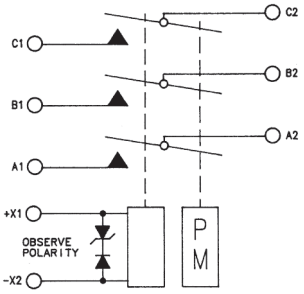

Circuit Configuration 2

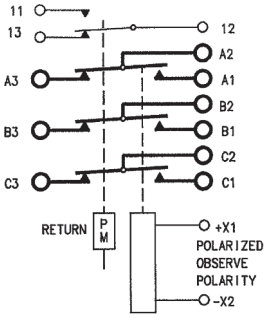

Circuit Configuration 3

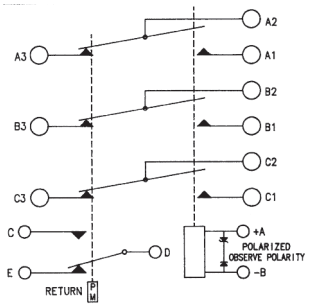

Circuit Configuration 4

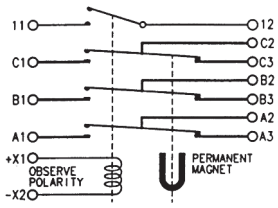

Circuit Configuration 5

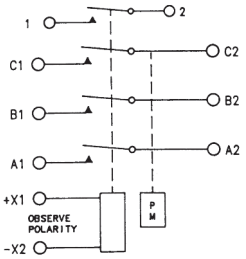

Circuit Configuration 6

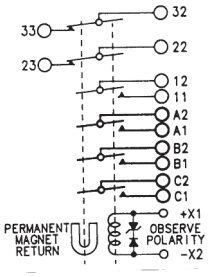

Circuit Configuration 7

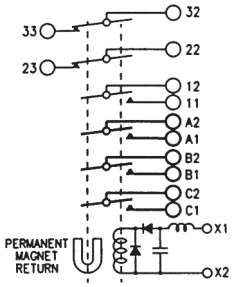

Circuit Configuration 8

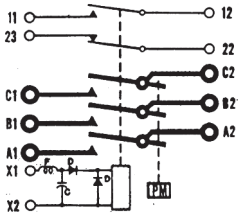

Circuit Configuration 9

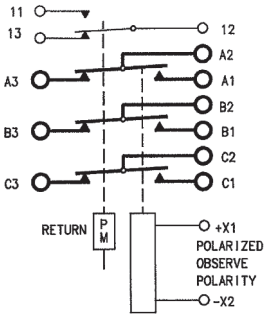

Circuit Configuration 10

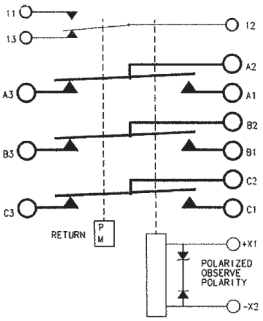

Circuit Configuration 11

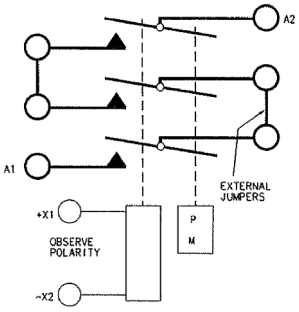

Circuit Configuration 12

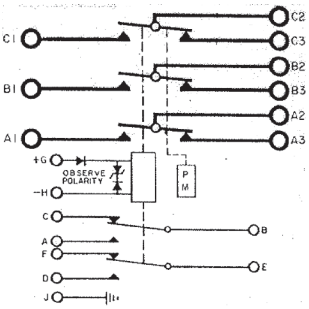

Circuit Configuration 13

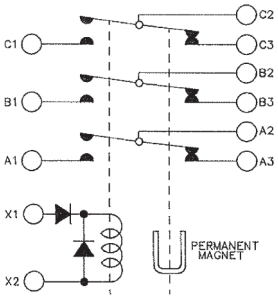

Circuit Configuration 14

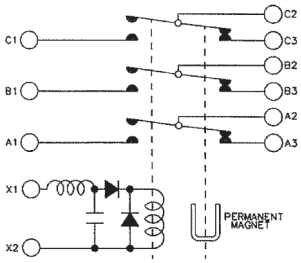

Circuit Configuration 15

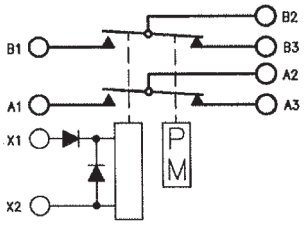

Circuit Configuration 16

For factory-direct application assistance, phone 419-521-9500 or fax 419-526-2749.

D7, DH7, DHR7, DR7 Series, Rated up to 50 Amps, 115/200 VAC, 400 Hz (Continued)

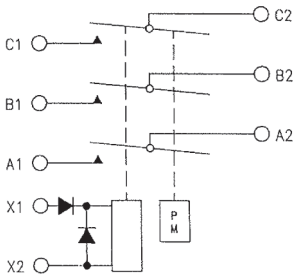

Circuit Configuration 17

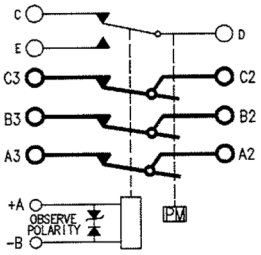

Circuit Configuration 18

HARTMAN Part Number	Construction Type	Mounting Style	Coil Type	Circuit Config.	TE Part Number
D-7BS	Gasket/Vented	A	C	1	1616036-1
D-7M	Gasket/Vented	B	C	2	1616016-2
D-7GR-2	Gasket/Vented	C	B	3	1616036-3
D-7GRZ	Gasket/Vented	D	C	4	1616036-5
DH-7BB	Hermetically Sealed	A	B	5	1616037-7
DH-7N	Hermetically Sealed	B	B	6	1616017-9
DH-7ZG-1	Hermetically Sealed	C	C	7	1-1616017-1
DHR-7ZG	Hermetically Sealed	C	A	8	1-1616017-2
DR-7VC	Hermetically Sealed	B	A	9	1616018-1
D-7GR	Gasket/Vented	E	B	10	1616036-2
D-7GR-3	Gasket/Vented	F	B	11	1616036-4
D-7MA	Gasket/Vented	G	B	12	1616016-3
D-7MM	Gasket/Vented	H	C	18	1616016-4
DH-7GR	Hermetically Sealed	E	C	11	1616037-9
DH-7ZAB	Hermetically Sealed	H	D	13	1-1616037-1
DHR-7B	Hermetically Sealed	I	E	14	1-1616037-6
DHR-7BE	Hermetically Sealed	J	A	15	1-1616037-7
DHR-7K	Hermetically Sealed	K	E	16	1616522-2
DHR-7M	Hermetically Sealed	L	E	17	1616518-2

D18, DH18 and DHR18 Series, Rated up to 50 Amps, 115/200 VAC, 400 Hz

Product Facts

- **3PDT, Center off**
- **Gasket sealed or Hermetically sealed**
- **Meets many requirements of MIL-PRF-6106**

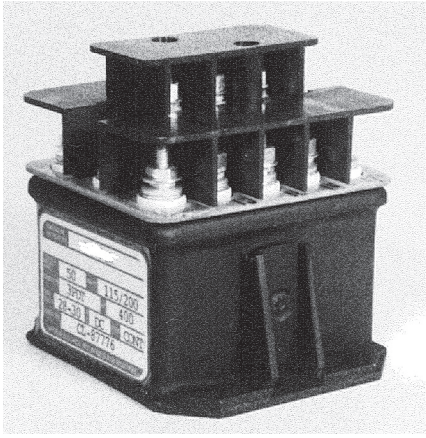

For factory-direct application assistance, phone 419-521-9500 or fax 419-526-2749.

Performance Data

Electrical Characteristics

Contact Arrangement — 3PDT, Center Off

Rated Operating Voltage — 115/200 VAC, 400 Hz

Resistive Rating — 50 Amps

Inductive Rating — 50 Amps

Motor Rating — 30 Amps

Lamp Rating — 15 Amps

Rupture Rating — 400 Amps

General Characteristics

Temperature Range — -55°C to +71°C

Operating Cycles (Life) at Rated Resistive Load, Min. — 50,000 cycles

Operating Cycles (Life) Mechanical, Min. — 100,000 cycles

Dielectric Strength —
All Circuits to Ground — 1,500 Vrms
Circuit to Circuit — 1,500 Vrms
Coil to Ground and Aux. Contacts — 1,000 Vrms

Insulation Resistance, Initial — 100 megohm min.

Altitude —
D-18 — 50,000 ft.
DH-18, DHR-18 — 80,000 ft.

Weight, Max. — .94 to 1.50 lbs

Sinusoidal Vibration — 10 G @ 70 to 2,000 Hz

Shock, Max. — 25 G

Operate Time @ Nom. Voltage, Max. — 35 msec

Release Time @ Nom. Voltage, Max. — 15 msec

Bounce Time @ Nom. Voltage, Max. — 5 msec

Coil Characteristics

Duty Cycle —
AC Continuous (Type E, See diagram below)
DC Continuous (Type A-D, See diagram below)

Operating Voltage, Nom. — 28 Vdc

Pickup Voltage @ 25°C, Max. —
Coil Type A — 18 Vdc
Coil Type B — 15 Vdc

Dropout Voltage @ 25°C, Max. —
Coil Type A — 1.5 to 7 Vdc
Coil Type B — 2.5 to 6.5 Vdc

Coil Resistance ±20% @ 25°C — 175 Ohms

Coil Current @ 25°C, Max. — .175 Amp

Coil Type

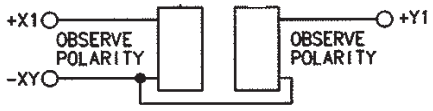

A — DC Continuous

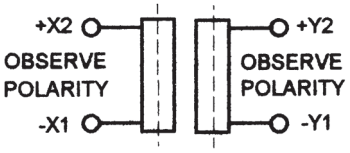

B — DC Continuous

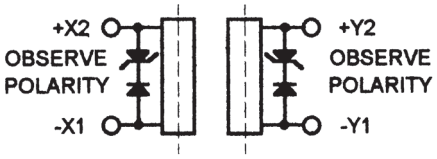

C – DC Continuous with Suppression

D — DC Continuous - Economical w/Suppression

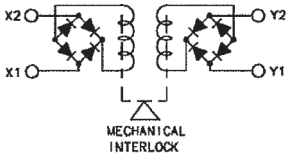

E – AC Continuous

For factory-direct application assistance, phone 419-521-9500 or fax 419-526-2749.

Catalog 5-1773450-5
Revised 3-13

www.te.com

Dimensions are shown for reference purposes only. Specifications subject to change.

Dimensions are in millimeters unless otherwise specified.

USA: +1 800 522 6752
Asia Pacific: +86 0 400 820 6015
UK: +44 800 267 666

For additional support numbers please visit www.te.com

D18, DH18 and DHR18 Series Contactors, Rated up to 50 Amps, 115/200 VAC, 400 Hz (Continued)

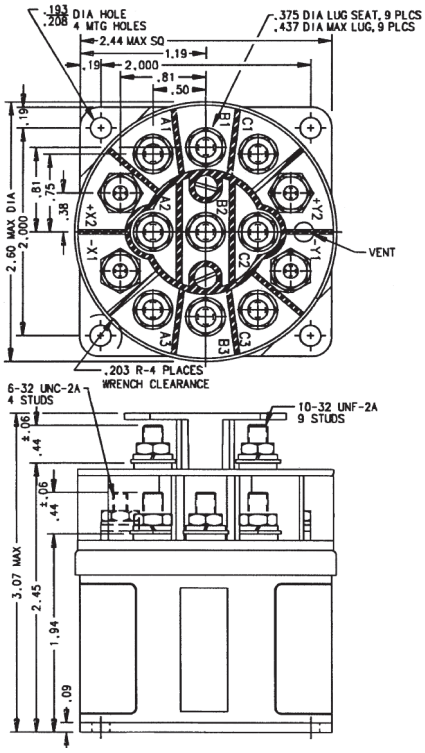

Mounting Style A

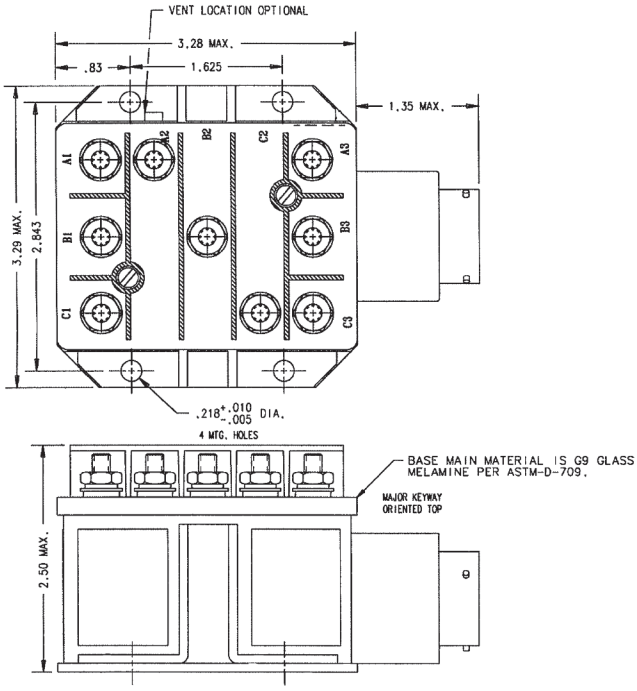

Mounting Style B

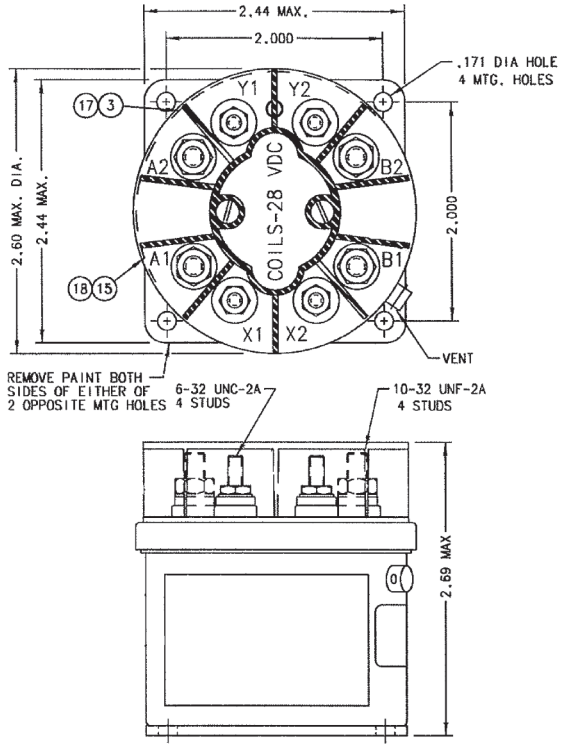

Mounting Style C

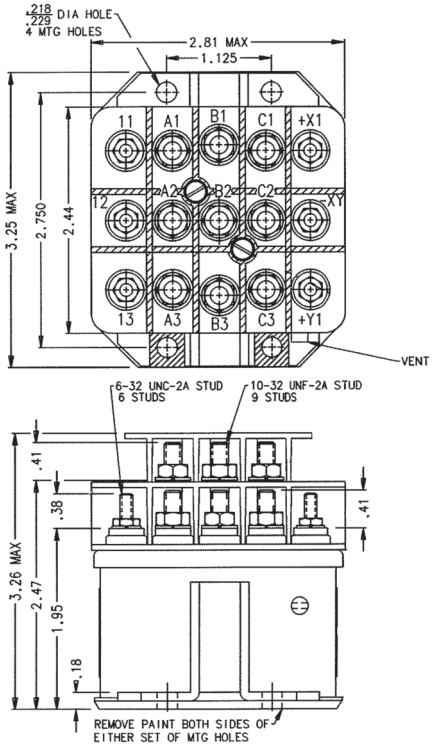

Mounting Style D

For factory-direct application assistance, phone 419-521-9500 or fax 419-526-2749.

D18, DH18 and DHR18 Series Contactors, Rated up to 50 Amps, 115/200 VAC, 400 Hz (Continued)

Circuit Configurations (Consult factory for other available circuit configurations)

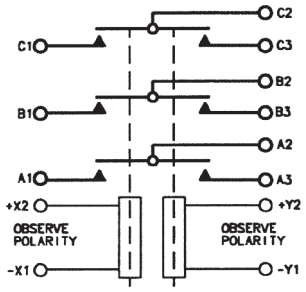

Circuit Configuration 1

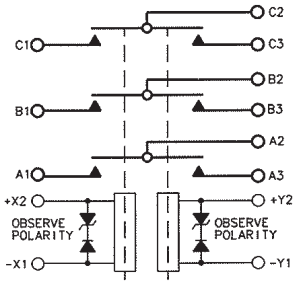

Circuit Configuration 2

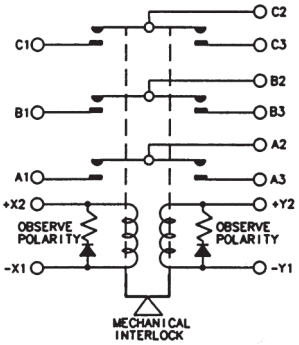

Circuit Configuration 3

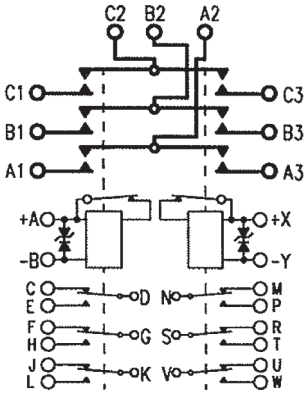

Circuit Configuration 4

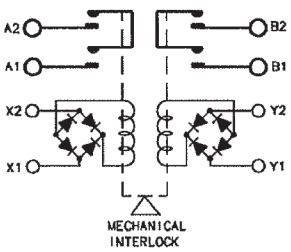

Circuit Configuration 5

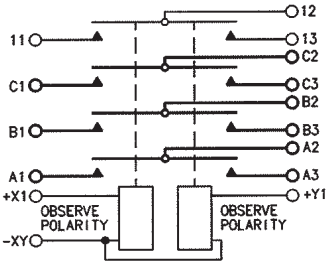

Circuit Configuration 6

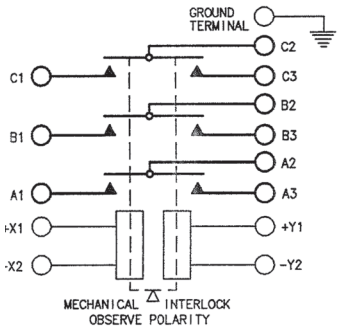

Circuit Configuration 7

HARTMAN Part Number	Construction Type	Mounting Style	Coil Type	Circuit Config.	TE Part Number
D-18	Gasket/Vented	A	A	1	1616048-1
D-180A	Gasket/Vented	D	C	6	1616048-2
D-18AA	Gasket/Vented	A	B	2	1616048-3
D-18F	Gasket/Vented	A	B	3	1616048-4
D-18ZZC	Gasket/Vented	B	D	4	1-1616957-3
DH-18	Hermetically Sealed	A	A	1	1616050-1
DH-18Y	Hermetically Sealed	A	A	7	1616524-3
DR-18E-5	Gasket/Vented	C	E	5	1616099-1

For factory-direct application assistance, phone 419-521-9500 or fax 419-526-2749.

Dimensions are shown for reference purposes only. Specifications subject to change.

Dimensions are in millimeters unless otherwise specified.

USA: +1 800 522 6752
Asia Pacific: +86 0 400 820 6015
UK: +44 800 267 666

For additional support numbers please visit www.te.com

BH-316 Series, Rated up to 50 Amps, 115/200 VAC, 400 Hz or 28 Vdc

Product Facts

- **3PST NO, Double break**
- **Hermetically sealed**
- **Auxiliary contacts available**
- **Meets many requirements of MIL-PRF-6106**

Performance Data

Electrical Characteristics

Contact Arrangement — 3PST NO, Double Break

Rated Operating Voltage — 28 Vdc or 115/200 VAC, 400 Hz, 3 phase

Resistive Rating — 50 Amps

Inductive Rating — 115/200 VAC, 400 Hz, 3 phase — 50 Amps
At 28 Vdc — 25 Amps

Motor Rating — 50 Amps

General Characteristics

Temperature Range — -55°C to +125°C

Operating Cycles (Life) at Rated Resistive Load, Min. — 100,000 cycles

Operating Cycles (Life) Mechanical, Min. — 200,000 cycles

Dielectric Strength —
All Circuits to Ground — 1,500 Vrms
Circuit to Circuit — 1,500 Vrms
Coil to Ground and Aux. Contacts — 1,000 Vrms

Insulation Resistance, Initial — 100 megohm min.

Weight, Max. — 1.20 lbs

Impact Shock — 5 G

Close Time @ 28 Vdc and 25°C, Max. — 25 msec

Release Time @ 28 Vdc and 25°C, Max. — 10 msec

Coil Characteristics

Duty Cycle — Continuous

Operating Voltage, Nom. — 28 Vdc

Pickup Voltage, Max. — 18 Vdc

Dropout Voltage — 1.5 to 7 Vdc

Coil Current, Holding, Max. — 0.5 Amp

Coil Type

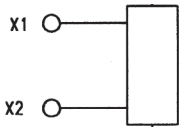

A — Continuous

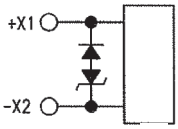

B — Continuous w/Suppression

For factory-direct application assistance, phone 419-521-9500 or fax 419-526-2749.

Catalog 5-1773450-5
Revised 3-13

www.te.com

Dimensions are shown for reference purposes only. Specifications subject to change.

Dimensions are in millimeters unless otherwise specified.

USA: +1 800 522 6752
Asia Pacific: +86 0 400 820 6015
UK: +44 800 267 666

For additional support numbers please visit www.te.com

BH-316 Series, Rated up to 50 Amps, 115/200 VAC, 400 Hz or 28 Vdc (Continued)

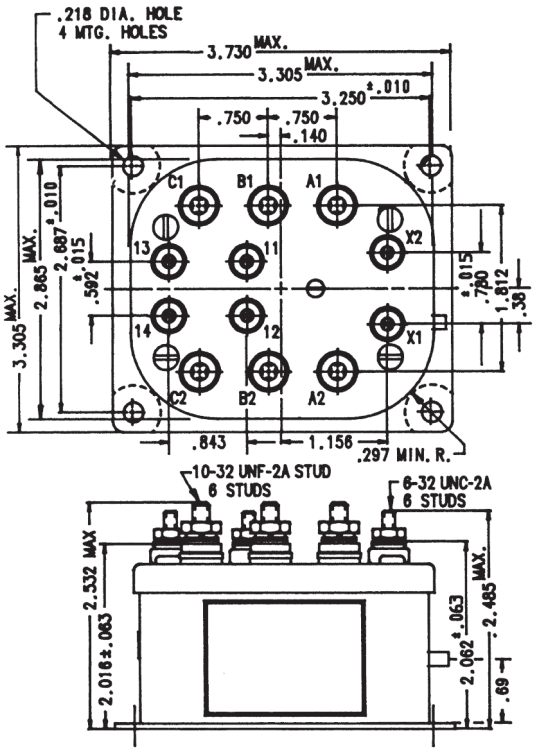

Mounting Style A

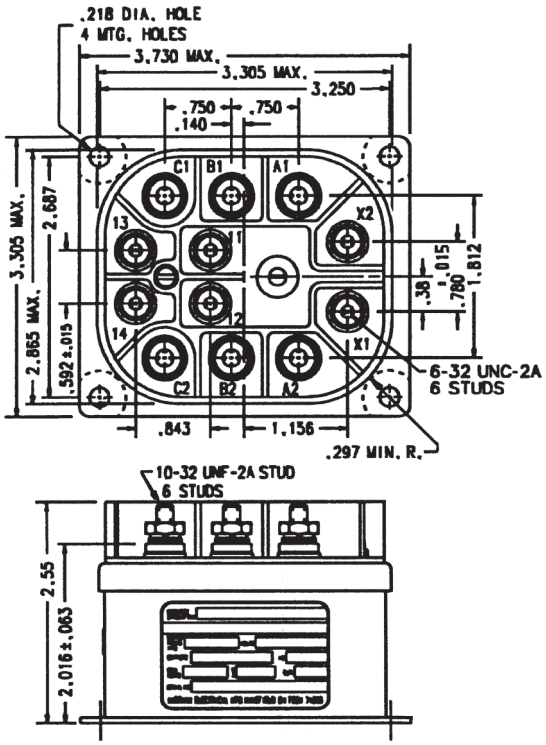

Mounting Style B

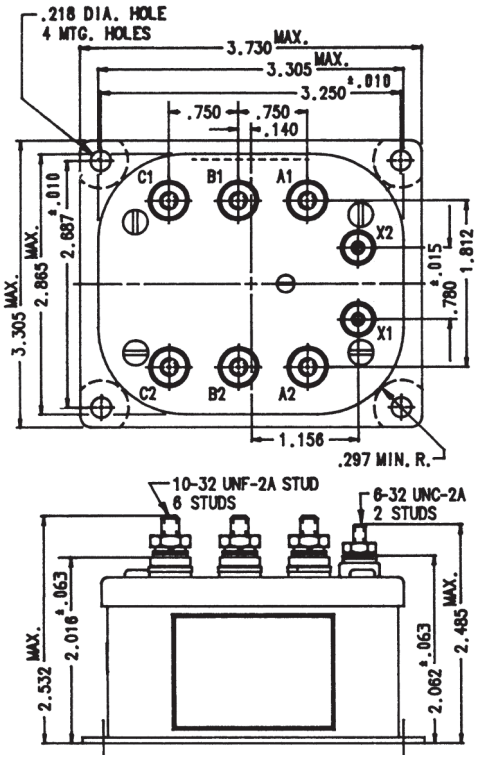

Mounting Style C

For factory-direct application assistance, phone 419-521-9500 or fax 419-526-2749.

BH-316 Series, Rated up to 50 Amps, 115/200 VAC, 400 Hz or 28 Vdc (Continued)

Circuit Configurations (Consult factory for other available circuit configurations)

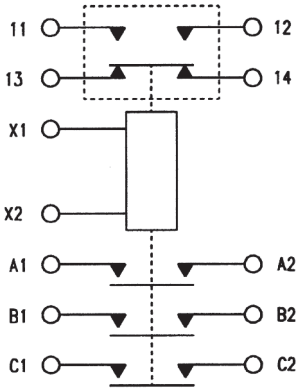

Circuit Configuration 1

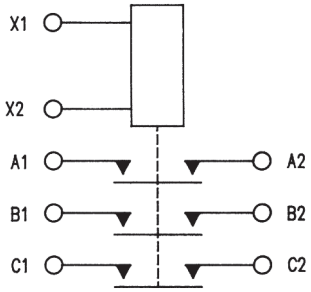

Circuit Configuration 2

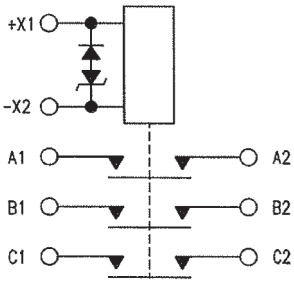

Circuit Configuration 3

HARTMAN Part Number	Construction Type	Mounting Style	Coil Type	Circuit Config.	TE Part Number
BH-316	Hermetically Sealed	A	Continuous	2	1616008-4
BH-316A	Hermetically Sealed	A	Continuous	1	1616008-5
BH-316D	Hermetically Sealed	A	Continuous	1	1616008-6
BH-316C	Hermetically Sealed	B	Continuous	3	1-1616520-0

For factory-direct application assistance, phone 419-521-9500 or fax 419-526-2749.

Catalog 5-1773450-5
Revised 3-13

www.te.com

Dimensions are shown for reference purposes only. Specifications subject to change.

Dimensions are in millimeters unless otherwise specified.

USA: +1 800 522 6752
Asia Pacific: +86 0 400 820 6015
UK: +44 800 267 666

For additional support numbers please visit www.te.com

B-138 Series, Rated up to 60 Amps, 115/200 VAC, 400 Hz

Product Facts

- **TPST NO and TPDT NC**
- **Gasket sealed or Hermetically sealed**
- **115/200 VAC, 400 Hz, 3 phase**
- **Auxiliary contacts available**
- **Meets the requirements of MIL-PRF-6106**

Performance Data

Electrical Characteristics

Contact Arrangement — TPST NO and TPDT NC

Rated Operating Voltage — 115/200 VAC, 400 Hz, 3 phase

Current, Resistive — 60 Amps

Current, Inductive — 60 Amps

Current, Motor — 60 Amps

Current, Rupture — 600 Amps

General Characteristics

Temperature Range — -55°C to +71°C

Operating Cycles (Life) at Rated Resistive Load, Min. — 50,000 cycles

Operating Cycles (Life) Mechanical, Min. — 100,000 cycles

Dielectric Strength — All Circuits to Ground — 1,500 Vrms
Circuit to Circuit — 1,500 Vrms
Coil to Ground and Aux. Contacts — 1,000 Vrms

Altitude Max. — 50,000 ft.

Weight, Nominal — 1.50 to 2.0 lbs

Coil Characteristics

Duty Cycle — Continuous or continuous with suppression

Operating Voltage, Nom. — 28 Vdc

Pickup Voltage, Max. @ 85°C — 18 Vdc

Dropout Voltage, Max. — 1.5 to 7 Vdc

Coil Current @ 29 Vdc Max. @ 25°C — 0.5 Amps

Inrush — 5 Amps

Coil Type

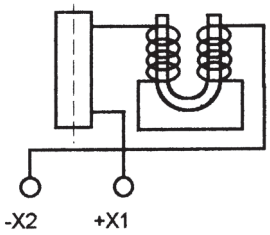

A — Continuous

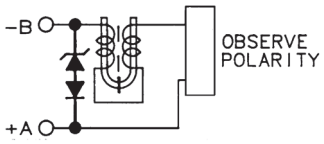

B — Continuous with Suppression

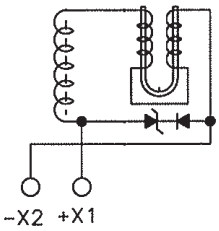

C — Continuous with Suppression

For factory-direct application assistance, phone 419-521-9500 or fax 419-526-2749.

Catalog 5-1773450-5
Revised 3-13

www.te.com

Dimensions are shown for reference purposes only. Specifications subject to change.

Dimensions are in millimeters unless otherwise specified.

USA: +1 800 522 6752
Asia Pacific: +86 0 400 820 6015
UK: +44 800 267 666

For additional support numbers please visit www.te.com

B-138 Series, Rated up to 60 Amps, 115/200 VAC, 400 Hz (Continued)

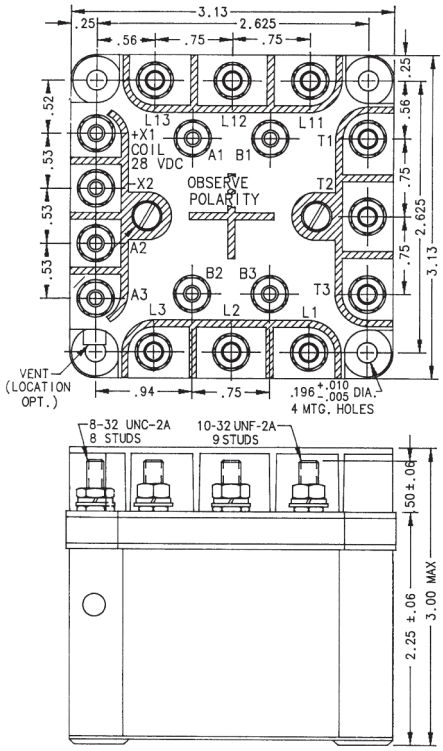

Mounting Style A

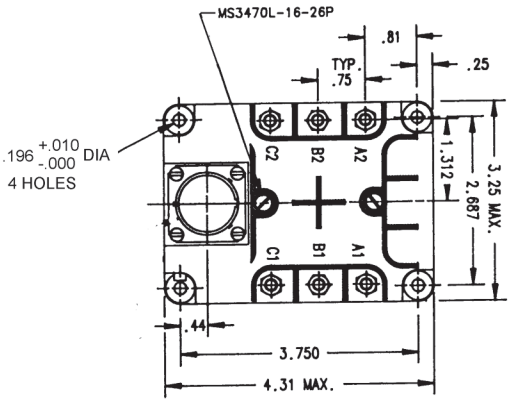

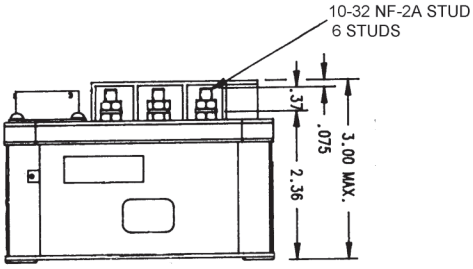

Mounting Style B

Circuit Configurations (Consult factory for other available circuit configurations)

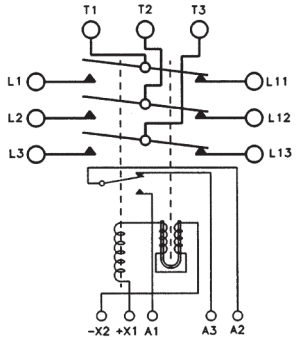

Circuit Configuration 1

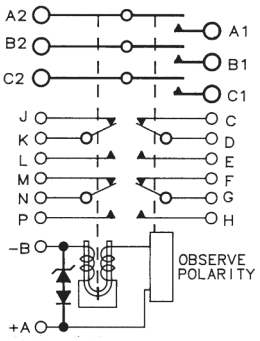

Circuit Configuration 2

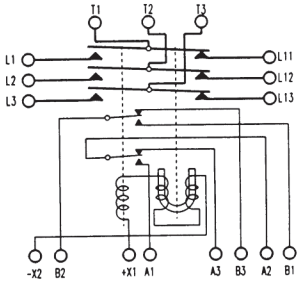

Circuit Configuration 3

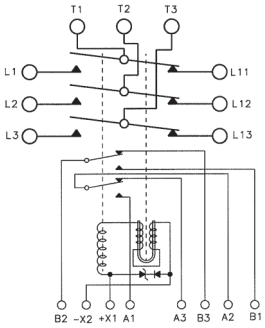

Circuit Configuration 4

HARTMAN Part Number	Construction Type	Mounting Style	Coil Type	Circuit Config.	TE Part Number
B-138S	Gasket/Vented	B	B	2	1616002-5
B-138XEH	Gasket/Vented	A	C	4	1616028-3
B-138BH	Gasket/Vented	A	A	1	1616028-1
B-138XAH	Gasket/Vented	A	A	3	1616028-2

For factory-direct application assistance, phone 419-521-9500 or fax 419-526-2749.

Catalog 5-1773450-5
Revised 3-13

www.te.com

Dimensions are shown for reference purposes only. Specifications subject to change.

Dimensions are in millimeters unless otherwise specified.

USA: +1 800 522 6752
Asia Pacific: +86 0 400 820 6015
UK: +44 800 267 666

For additional support numbers please visit www.te.com

B-140 Series, Rated up to 60 Amps, 115/200 VAC, 400 Hz

Product Facts

- **3PDT NO, Center off**
- **Gasket sealed or Hermetically sealed**
- **115/200 VAC, 400 Hz, 3 phase**
- **Auxiliary contacts available**
- **Meets the requirements of MIL-PRF-6106**

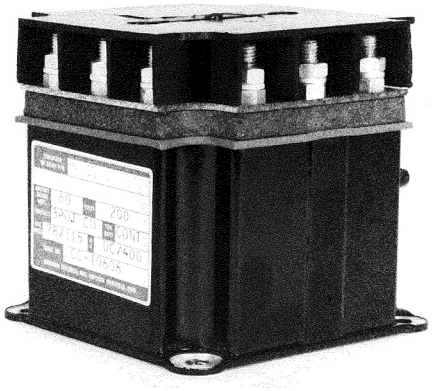

Performance Data

Electrical Characteristics

Contact Arrangement — 3PDT NO, Center Off

Rated Operating Voltage — 115/200 VAC, 400 Hz, 3 phase

Current, Resistive — 60 Amps

Current, Inductive — 60 Amps

Current, Motor — 60 Amps

Current, Rupture — 600 Amps

General Characteristics

Temperature Range — -55°C to +120°C

Operating Cycles (Life) at Rated Resistive Load, Min. — 50,000 cycles

Operating Cycles (Life) Mechanical, Min. — 100,000 cycles

Dielectric Strength —
All Circuits to Ground — 1,500 Vrms
Circuit to Circuit — 1,500 Vrms
Coil to Ground and Aux. Contacts — 1,000 Vrms

Insulation Resistance, Initial — 100 megohm min.

Altitude Max. — 50,000 ft.

Weight, Nominal — 1.50 to 2.31 lbs

Sinusoidal Vibration — 10 G @ 70 to 2,000 Hz

Shock, Max. — 15 G

Coil Characteristics

Duty Cycle — Continuous (Type A or B, See diagram below)

Operating Voltage, Nom. — 28 Vdc

Pickup Voltage, Max. @ 85°C — 18 Vdc

Dropout Voltage, Max. — 1.5 to 7 Vdc

Coil Current @ 29 Vdc Max. @ 25°C — 0.35 Amps

Inrush — 5 Amps

Coil Type

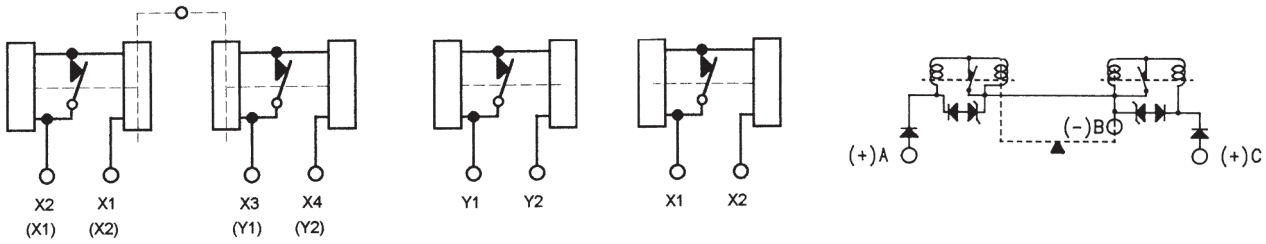

A — Continuous **B — Continuous** **C — Continuous w/Suppression**

For factory-direct application assistance, phone 419-521-9500 or fax 419-526-2749.

Catalog 5-1773450-5
Revised 3-13

www.te.com

Dimensions are shown for reference purposes only. Specifications subject to change.

Dimensions are in millimeters unless otherwise specified.

USA: +1 800 522 6752
Asia Pacific: +86 0 400 820 6015
UK: +44 800 267 666

For additional support numbers please visit www.te.com

B-140 Series, Rated up to 60 Amps, 115/200 VAC, 400 Hz (Continued)

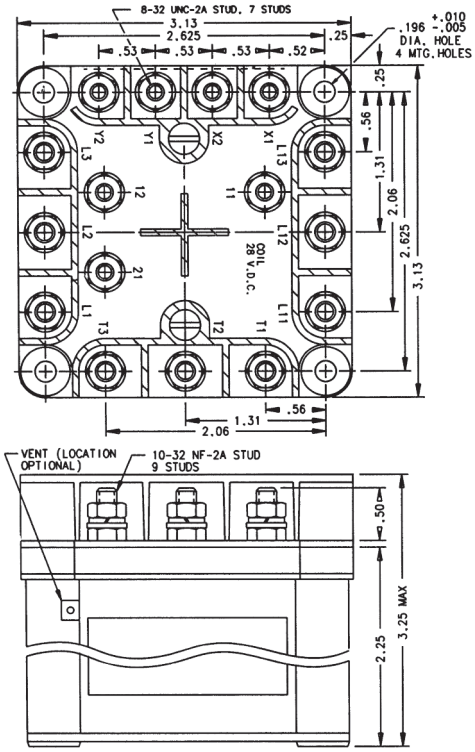

Mounting Style A

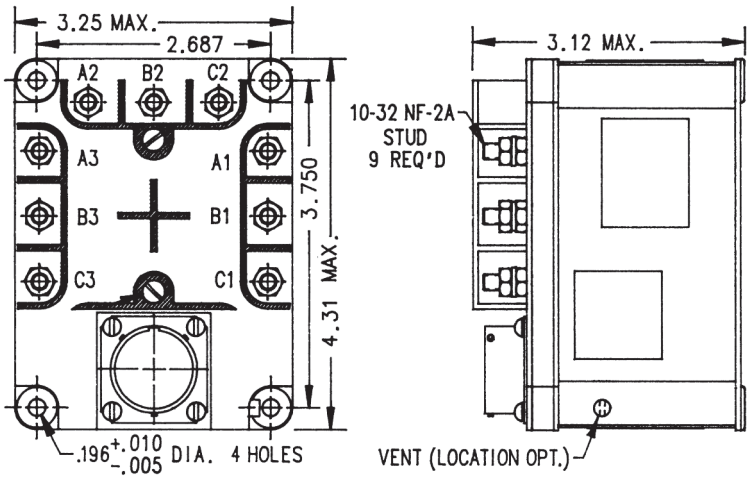

Mounting Style B

Circuit Configurations (Consult factory for other available circuit configurations)

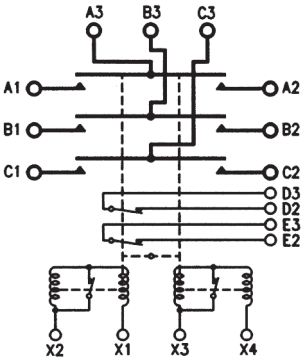

Circuit Configuration 1

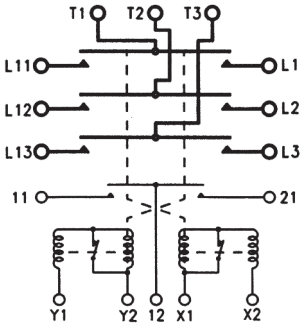

Circuit Configuration 2

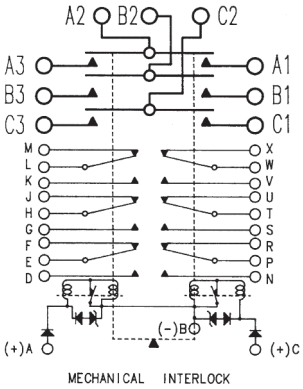

Circuit Configuration 3

HARTMAN Part Number	Construction Type	Mounting Style	Coil Type	Circuit Config.	TE Part Number
B-140AP-1	Gasket/Vented	B	Continuous	3	1616043-7
B-140BH	Gasket/Vented	A	Continuous	1	1616043-9
B-140V	Gasket/Vented	A	Continuous	2	1-1616043-0

For factory-direct application assistance, phone 419-521-9500 or fax 419-526-2749.

Catalog 5-1773450-5
Revised 3-13

www.te.com

Dimensions are shown for reference purposes only. Specifications subject to change.

Dimensions are in millimeters unless otherwise specified.

USA: +1 800 522 6752
Asia Pacific: +86 0 400 820 6015
UK: +44 800 267 666

For additional support numbers please visit www.te.com

DH-7 Series, Rated up to 60 Amps, 115/200 VAC, 400 Hz

Product Facts

- 3PDT
- Hermetically sealed
- Auxiliary contacts available
- Meets many requirements of MIL-PRF-6106

Performance Data

Electrical Characteristics

Contact Arrangement — 3PDT

Rated Operating Voltage — 115/200 VAC, 400 Hz, 3 phase

Resistive Rating — 60 Amps

General Characteristics

Temperature Range — -55°C to +71°C

Operating Cycles (Life) at Rated Resistive Load, Min. — 50,000 cycles

Operating Cycles (Life) Mechanical, Min. — 100,000 cycles

Dielectric Strength —
All Circuits to Ground — 1,500 Vrms
Circuit to Circuit — 1,500 Vrms
Coil to Ground and Aux. Contacts — 1,000 Vrms

Altitude — 80,000 ft

Weight, Max. — .91 lbs

Coil Characteristics

Duty Cycle — Continuous

Operating Voltage, Nom. — 28 Vdc

Pickup Voltage @ 25°C, Max. — 18 Vdc

Dropout Voltage @ 25°C, Max. — 1.5 to 7 Vdc

Coil Resistance ±20% @ 25°C — 126 Ohms

Coil Current @ 25°C, Max. — .28 Amp

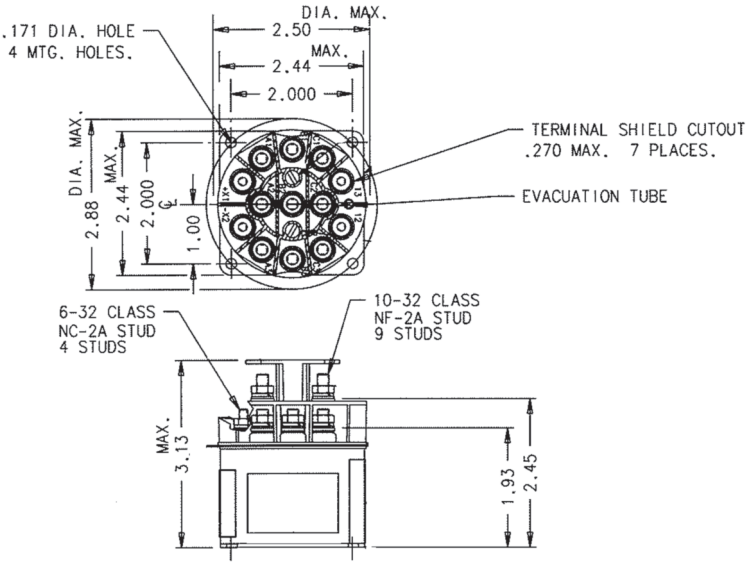

Mounting Style A

Circuit Configurations (Consult factory for other available circuit configurations)

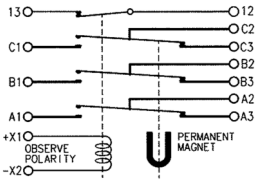

Circuit Configuration 1

For factory-direct application assistance, phone 419-521-9500 or fax 419-526-2749.

HARTMAN Part Number	Construction Type	Mounting Style	Coil Type	Circuit Config.	TE Part Number
DH-7BC	Hermetically Sealed	A	Continuous	1	1616037-8

Catalog 5-1773450-5
Revised 3-13

www.te.com

Dimensions are shown for reference purposes only. Specifications subject to change.

Dimensions are in millimeters unless otherwise specified.

USA: +1 800 522 6752
Asia Pacific: +86 0 400 820 6015
UK: +44 800 267 666

For additional support numbers please visit www.te.com

D25, DH25 and DHR25 Series, Rated up to 100 Amps, 115/200 VAC, 400 Hz

Product Facts

- **3PDT NO**
- **Gasket sealed or Hermetically sealed**
- **Auxiliary contacts available**
- **Meets many requirements of MIL-PRF-6106**

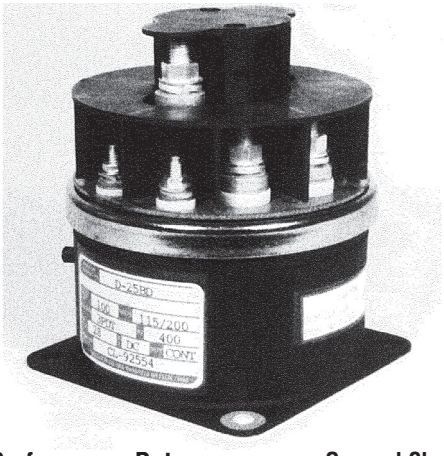

Performance Data

Electrical Characteristics

Contact Arrangement — 3PDT NO

Rated Operating Voltage — 115/200 VAC, 400 Hz, 3 phase

Resistive Rating — 100 Amps

Inductive Rating — 100 Amps

General Characteristics

Temperature Range — -55°C to +85°C

Operating Cycles (Life) at Rated Resistive Load, Min. — 50,000 cycles

Operating Cycles (Life) Mechanical, Min. — 100,000 cycles

Dielectric Strength —
All Circuits to Ground — 1,500 Vrms
Circuit to Circuit — 1,500 Vrms
Coil to Ground and Aux. Contacts — 1,000 Vrms

Insulation Resistance, Initial — 100 megohm min.

Altitude —
D-25 — 50,000 ft.
DH-25, DHR-25 — 80,000 ft.

Weight, Max. — 2.20 to 2.75 lbs

Sinusoidal Vibration — 10 G @ 70 to 2,000 Hz

Shock, Max. — 25 G

Operate Time @ Nom. Voltage, Max. — 35 msec

Release Time @ Nom. Voltage, Max. — 35 msec

Bounce Time @ Nom. Voltage, Max. — 5 msec

Coil Characteristics

Duty Cycle —
VAC 400 Hz — AC (Type A, See diagram below)
Vdc — Continuous (Type B, See diagram below)
Vdc — Continuous with suppression (Type C, See diagram below)

Operating Voltage, Nom. —
VAC 400 Hz — 115 VAC
Vdc — 28 Vdc

Pickup Voltage @ 25°C, Max. —
VAC 400 Hz — 103.5 VAC
Vdc — 18 Vdc

Dropout Voltage @ 25°C, Max. —
VAC 400 Hz — 5 to 45 VAC
Vdc — 1.5 to 7 Vdc

Coil Resistance ±20% @ 25°C —
VAC 400 Hz — N/A
Vdc — 175 Ohms

Coil Type

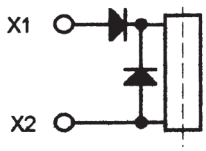

A — AC

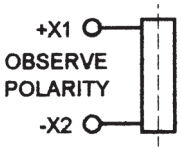

B — Continuous

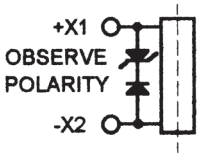

C — Continuous with Suppression

For factory-direct application assistance, phone 419-521-9500 or fax 419-526-2749.

Catalog 5-1773450-5
Revised 3-13

www.te.com

Dimensions are shown for reference purposes only. Specifications subject to change.

Dimensions are in millimeters unless otherwise specified.

USA: +1 800 522 6752
Asia Pacific: +86 0 400 820 6015
UK: +44 800 267 666

For additional support numbers please visit www.te.com

D25, DH25 and DHR25 Series, Rated up to 100 Amps, 115/200 VAC, 400 Hz (Continued)

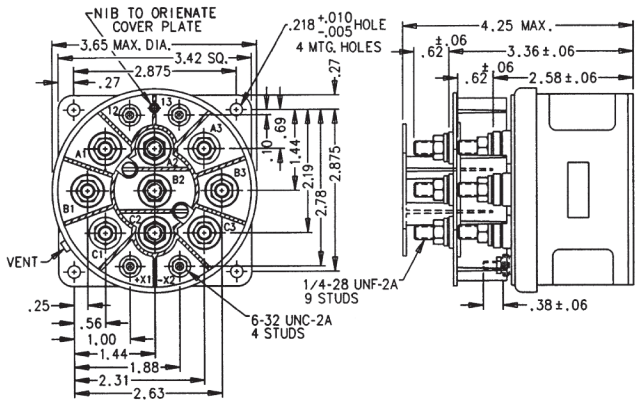

Mounting Style A

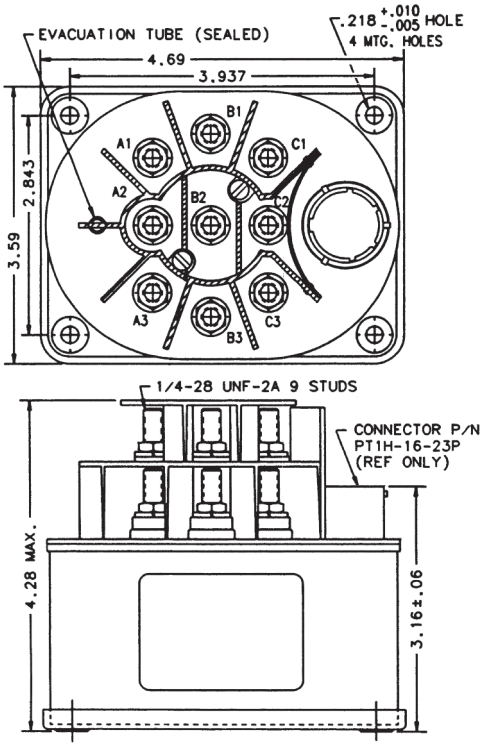

Mounting Style B

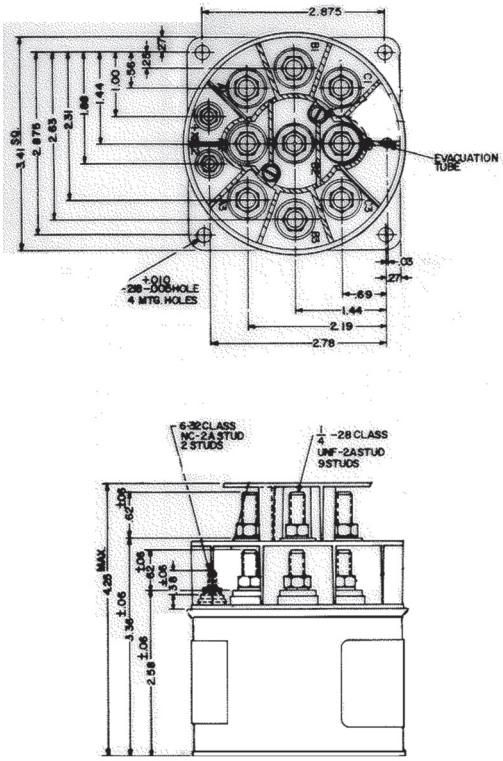

Mounting Style C

For factory-direct application assistance, phone 419-521-9500 or fax 419-526-2749.

Dimensions are shown for reference purposes only. Specifications subject to change.

Dimensions are in millimeters unless otherwise specified.

USA: +1 800 522 6752
Asia Pacific: +86 0 400 820 6015
UK: +44 800 267 666

For additional support numbers please visit www.te.com

D25, DH25 and DHR25 Series, Rated up to 100 Amps, 115/200 VAC, 400 Hz (Continued)

Circuit Configurations (Consult factory for other available circuit configurations)

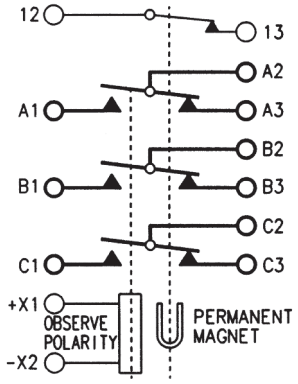

Circuit Configuration 1

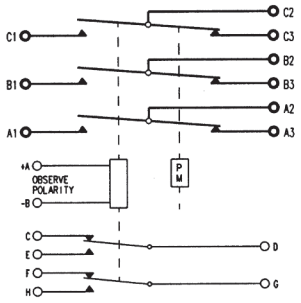

Circuit Configuration 2

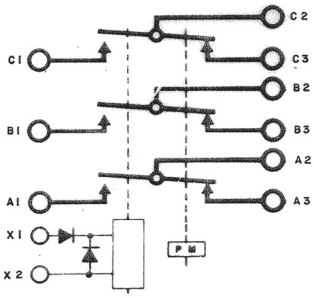

Circuit Configuration 3

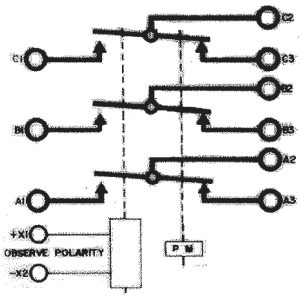

Circuit Configuration 4

HARTMAN Part Number	Construction Type	Mounting Style	Coil Type	Circuit Config.	TE Part Number
D-25BD	Gasket/Vented	A	B	1	1616034-3
DH-25B	Hermetically Sealed	C	B	4	1616037-2
DH-25BA	Hermetically Sealed	B	B	2	1616037-3
DHR-25BG	Hermetically Sealed	A	A	3	1-1616037-5

For factory-direct application assistance, phone 419-521-9500 or fax 419-526-2749.

Catalog 5-1773450-5
Revised 3-13

www.te.com

Dimensions are shown for reference purposes only. Specifications subject to change.

Dimensions are in millimeters unless otherwise specified.

USA: +1 800 522 6752
Asia Pacific: +86 0 400 820 6015
UK: +44 800 267 666

For additional support numbers please visit www.te.com

D25 and DH25 Series, Rated up to 120 Amps, 115/200 VAC, 400 Hz

Product Facts

- **3PST NO**
- **Gasket sealed or Hermetically sealed**
- **Auxiliary contacts available**
- **Meets many requirements of MIL-PRF-6106**

Performance Data

Electrical Characteristics

Contact Arrangement — 3PST NO

Rated Operating Voltage — 115/200 VAC, 400 Hz, 3 phase

Resistive Rating — 120 Amps

Inductive Rating — 120 Amps

Motor Rating — 100 Amps

Rupture Rating — 1,000 Amps

General Characteristics

Temperature Range — -55°C to +85°C

Operating Cycles (Life) at Rated Resistive Load, Min. — 50,000 cycles

Operating Cycles (Life) Mechanical, Min. — 100,000 cycles

Dielectric Strength —
All Circuits to Ground — 1,500 Vrms
Circuit to Circuit — 1,500 Vrms
Coil to Ground and Aux. Contacts — 1,000 Vrms

Altitude —
D-25 — 50,000 ft.
DH-25 — 80,000 ft.

Weight, Max. — 2.10 lbs

Coil Characteristics

Duty Cycle —
Vdc — Continuous (Type A, See diagram below)
Vdc — Continuous with suppression (Type B, See diagram below)

Operating Voltage, Nom. — 28 Vdc

Pickup Voltage @ 25°C, Max. — 18 Vdc

Dropout Voltage @ 25°C, Max. — 1.5 to 7 Vdc

Coil Resistance ±20% @ 25°C — 113 Ohms

Coil Type

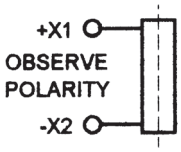

A — Continuous

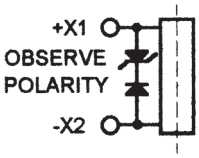

B — Continuous with Suppression

For factory-direct application assistance, phone 419-521-9500 or fax 419-526-2749.

D25 and DH25 Series, Rated up to 120 Amps, 115/200 VAC, 400 Hz (Continued)

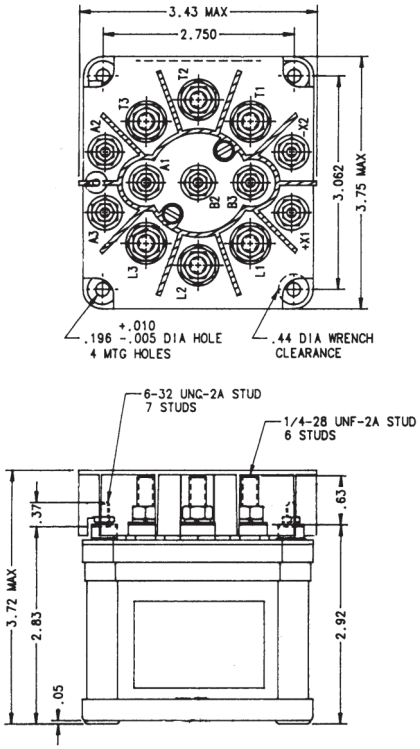

Mounting Style A

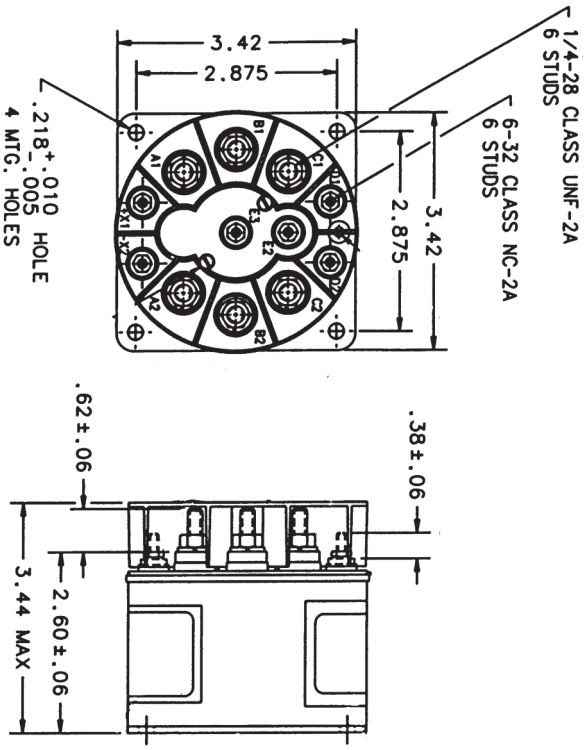

Mounting Style B

Circuit Configurations (Consult factory for other available circuit configurations)

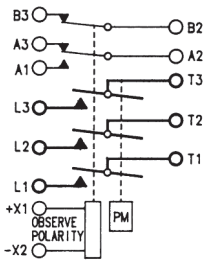

Circuit Configuration 1

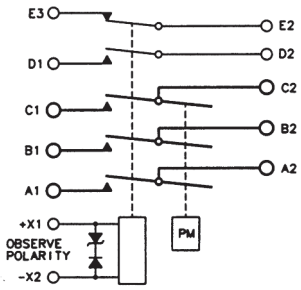

Circuit Configuration 2

HARTMAN Part Number	Construction Type	Mounting Style	Coil Type	Circuit Config.	TE Part Number
D-25CF	Gasket/Vented	A	A	1	1616015-1
DH-25CU	Hermetically Sealed	B	B	2	1616017-4

For factory-direct application assistance, phone 419-521-9500 or fax 419-526-2749.

Catalog 5-1773450-5
Revised 3-13

www.te.com

Dimensions are shown for reference purposes only. Specifications subject to change.

Dimensions are in millimeters unless otherwise specified.

USA: +1 800 522 6752
Asia Pacific: +86 0 400 820 6015
UK: +44 800 267 666

For additional support numbers please visit www.te.com

D-31 Series, Rated up to 100 Amps, 115/200 VAC, 400 Hz

Product Facts

- **3PDT, Center off**
- **Hermetically sealed**
- **Auxiliary contacts available**
- **Meets many requirements of MIL-PRF-6106**

Performance Data

Electrical Characteristics

Contact Arrangement — 3PDT, Center Off

Rated Operating Voltage — 115/200 VAC, 400 Hz, 3 phase

Resistive Rating — 100 Amps

General Characteristics

Temperature Range — -55°C to +71°C

Operating Cycles (Life) at Rated Resistive Load, Min. — 50,000 cycles

Operating Cycles (Life) Mechanical, Min. — 100,000 cycles

Dielectric Strength —
All Circuits to Ground — 1,500 Vrms
Circuit to Circuit — 1,500 Vrms
Coil to Ground and Aux. Contacts — 1,000 Vrms

Altitude — 50,000 ft

Weight, Max. — 2.31 lbs

Coil Characteristics

Duty Cycle — Continuous

Operating Voltage, Nom. — 28 Vdc

Pickup Voltage @ 71°C, Max. — 18 Vdc

Dropout Voltage, Max. — 1.5 to 7 Vdc

Coil Resistance ±20% @ 25°C — 160 Ohms

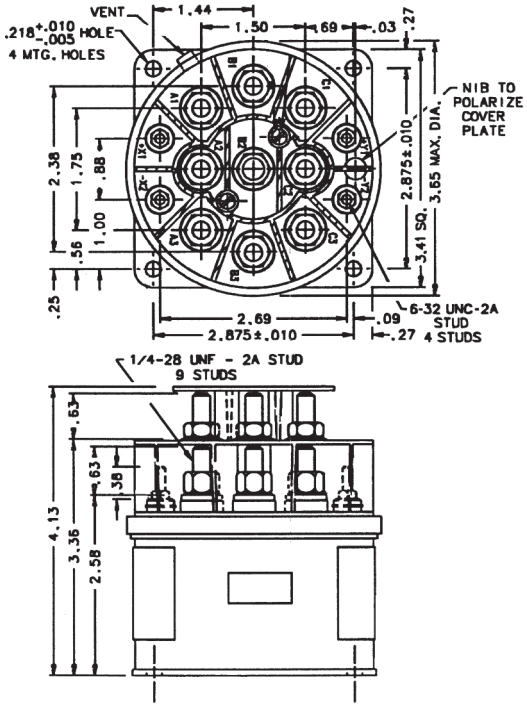

Mounting Style A

Circuit Configurations (Consult factory for other available circuit configurations)

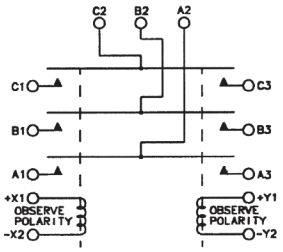

Circuit Configuration 1

For factory-direct application assistance, phone 419-521-9500 or fax 419-526-2749.

HARTMAN Part Number	Construction Type	Mounting Style	Coil Type	Circuit Config.	TE Part Number
D-31C	Gasket/Vented	A	Continuous	1	1616049-1

Catalog 5-1773450-5
Revised 3-13

www.te.com

Dimensions are shown for reference purposes only. Specifications subject to change.

Dimensions are in millimeters unless otherwise specified.

USA: +1 800 522 6752
Asia Pacific: +86 0 400 820 6015
UK: +44 800 267 666

For additional support numbers please visit www.te.com

D-31, DH-31, and DHL-31 Series, Rated up to 120 Amps, 115/200 VAC, 400 Hz

Product Facts

- **3PDT, Center off**
- **Gasket sealed or Hermetically sealed**
- **Auxiliary contacts available**
- **Meets many requirements of MIL-PRF-6106**

Performance Data

Electrical Characteristics

Contact Arrangement — 3PDT, Center Off

Rated Operating Voltage — 115/200 VAC, 400 Hz, 3 phase

Resistive Rating — 120 Amps

Inductive Rating — 120 Amps

Motor Rating — 80 Amps

Rupture Rating — 1,000 Amps

General Characteristics

Temperature Range — -55°C to +71°C

Operating Cycles (Life) at Rated Resistive Load, Min. — 50,000 cycles

Operating Cycles (Life) Mechanical, Min. — 100,000 cycles

Dielectric Strength —
All Circuits to Ground — 1,500 Vrms
Circuit to Circuit — 1,500 Vrms
Coil to Ground and Aux. Contacts — 1,000 Vrms

Altitude —
D-31 — 50,000 ft
DH-31, DHL-31 — 70,000 ft

Weight — 2.60 lbs

Coil Characteristics

Duty Cycle —
Continuous (Type A, See diagram below)
Continuous with suppression (Type B or Type C, See diagram below)

Operating Voltage, Nom. — 28 Vdc

Pickup Voltage @ 25°C, Max. —
Coil Type A and C — 18 Vdc
Coil Type B — 15 Vdc

Dropout Voltage @ 25°C, Max. —
Coil Type A and C — 1.5 to 7 Vdc
Coil Type B — 2 to 7 Vdc

Coil Resistance ±20% @ 25°C —
Coil Type A — N/A
Coil Type B — 100 Ohms
Coil Type C — 132 Ohms

Coil Current @ 25°C, Max. — .350 Amp

Coil Type

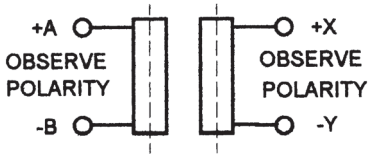

A — Continuous

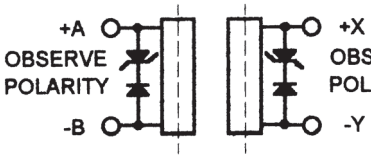

B — Continuous with Suppression

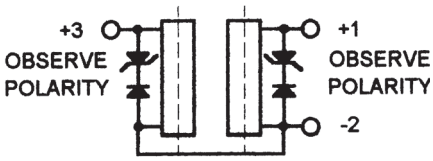

C — Continuous with Suppression

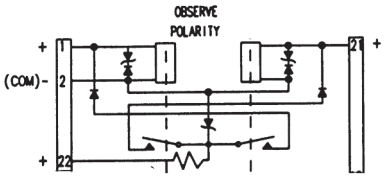

D — Latching

For factory-direct application assistance, phone 419-521-9500 or fax 419-526-2749.

Catalog 5-1773450-5
Revised 3-13

www.te.com

Dimensions are shown for reference purposes only. Specifications subject to change.

Dimensions are in millimeters unless otherwise specified.

USA: +1 800 522 6752
Asia Pacific: +86 0 400 820 6015
UK: +44 800 267 666

For additional support numbers please visit www.te.com

D-31, DH-31, and DHL-31 Series, Rated up to 120 Amps, 115/200 VAC, 400 Hz (Continued)

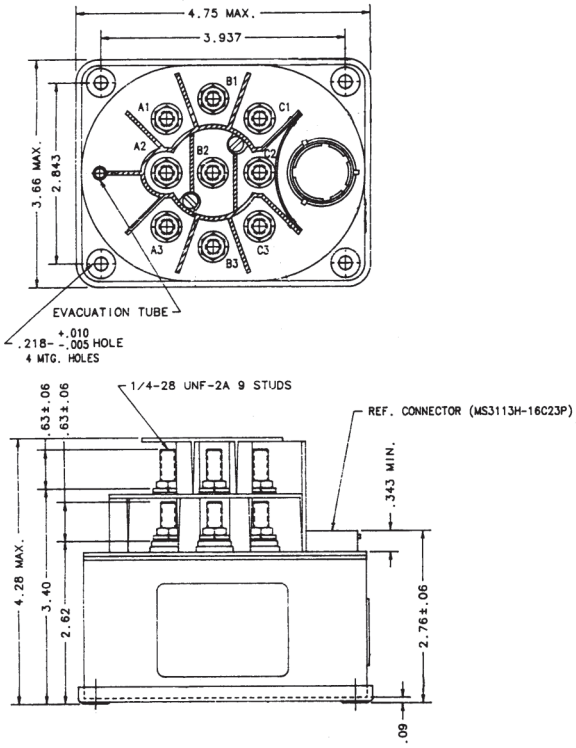

Mounting Style A

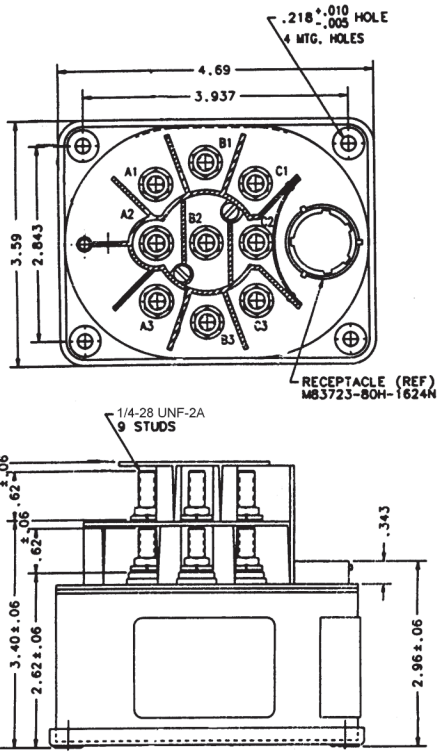

Mounting Style B

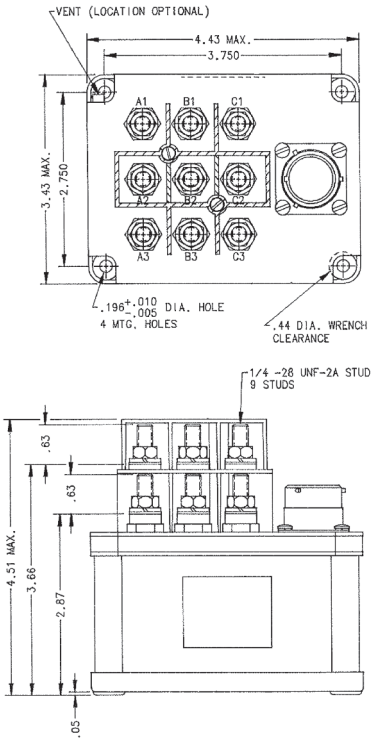

Mounting Style C

For factory-direct application assistance, phone 419-521-9500 or fax 419-526-2749.

Dimensions are shown for reference purposes only. Specifications subject to change.

Dimensions are in millimeters unless otherwise specified.

USA: +1 800 522 6752
Asia Pacific: +86 0 400 820 6015
UK: +44 800 267 666

For additional support numbers please visit www.te.com

D-31, DH-31, and DHL-31 Series, Rated up to 120 Amps, 115/200 VAC, 400 Hz (Continued)

Circuit Configurations (Consult factory for other available circuit configurations)

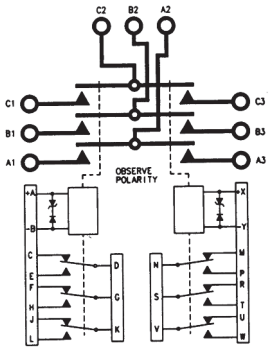

Circuit Configuration 1

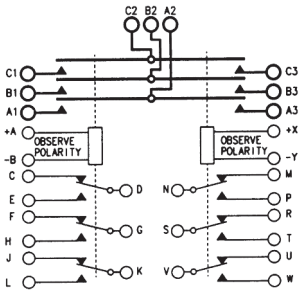

Circuit Configuration 2

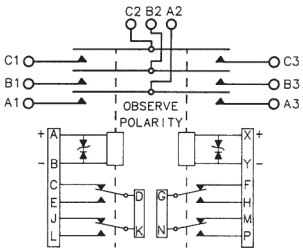

Circuit Configuration 3

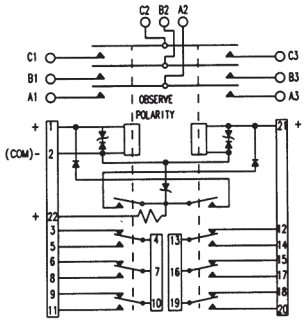

Circuit Configuration 4

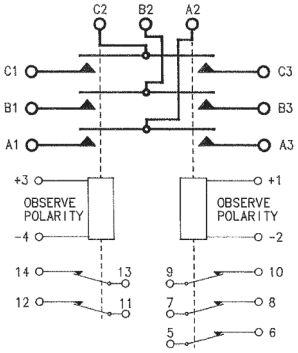

Circuit Configuration 4

HARTMAN Part Number	Construction Type	Mounting Style	Coil Type	Circuit Config.	TE Part Number
D-31DB	Gasket/Vented	A	B	1	1616049-2
D-31TH	Gasket/Vented	C	A	5	1616524-5
DH-31A	Hermetically Sealed	A	A	2	1616050-4
DH-31DA	Hermetically Sealed	A	B	3	1616050-5
DH-31DAA	Hermetically Sealed	A	A	3	1616050-6
DHL-31B	Hermetically Sealed	B	D	4	1616050-8

For factory-direct application assistance, phone 419-521-9500 or fax 419-526-2749.

Catalog 5-1773450-5
Revised 3-13

www.te.com

Dimensions are shown for reference purposes only. Specifications subject to change.

Dimensions are in millimeters unless otherwise specified.

USA: +1 800 522 6752
Asia Pacific: +86 0 400 820 6015
UK: +44 800 267 666

For additional support numbers please visit www.te.com

D-25 Series, Rated up to 125 Amps, 115/200 VAC, 400 Hz

Product Facts

- 3PDT, Side stable
- Gasket sealed

Performance Data

Electrical Characteristics

Main Contacts —

Contact Arrangement — 3PDT, Side Stable

Rated Operating Voltage — 115/200 VAC, 400 Hz

Resistive Rating — 125 Amps

Inductive Rating — 100 Amps

Motor Load — 60 Amps

Rupture Rating — 600 Amps

Overload Rating — 600 Amps

Auxiliary Contacts —

Contact Arrangement — 2PDT

Voltage — 28 Vdc or 115 VAC, 400 Hz

Resistive Rating — 3 Amps

General Characteristics

Temperature Range — -55°F to +71°F

Altitude, Max. — 50,000 ft

Weight, Nominal — 2.75 lbs

Coil Characteristics

Duty Cycle — Continuous

Operating Voltage, Nom. — 28 Vdc

Pickup Voltage @ 25°C, Max. — 18 Vdc

Dropout Voltage @ 25°C — 2.5 to 7 Vdc

Coil Resistance @ 25°C — 113 Ohms ± 20%

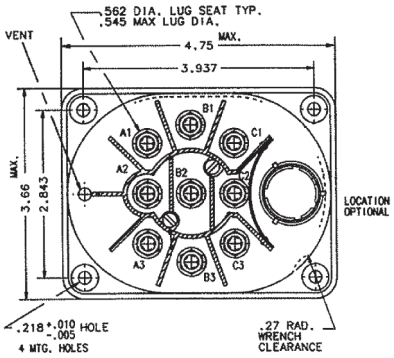

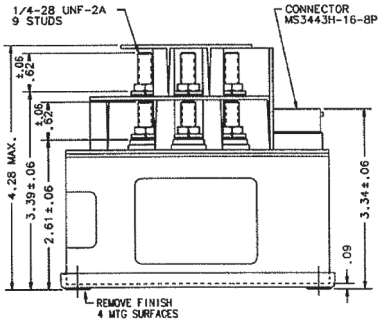

Mounting Style A

Circuit Configurations (Consult factory for other available circuit configurations)

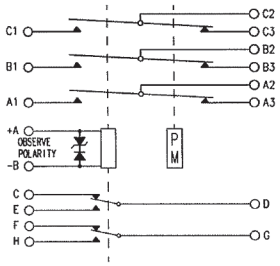

Circuit Configuration 1

For factory-direct application assistance, phone 419-521-9500 or fax 419-526-2749.

HARTMAN Part Number	Construction Type	Mounting Style	Coil Type	Circuit Config.	TE Part Number
D-25BAH	Gasket/Vented	A	Continuous	1	1616034-2

Catalog 5-1773450-5
Revised 3-13

www.te.com

Dimensions are shown for reference purposes only. Specifications subject to change.

Dimensions are in millimeters unless otherwise specified.

USA: +1 800 522 6752
Asia Pacific: +86 0 400 820 6015
UK: +44 800 267 666

For additional support numbers please visit www.te.com

B309 Series, Rated up to 130 Amps, 115 VDC

Product Facts

- **3PST NO, Single break main contacts**
- **2PDT Auxiliary contacts (note 1)**
- **Gasket sealed**
- **Meets many requirements of MIL-PRF-6106**

Performance Data

Electrical Characteristics

Contact Arrangement — 3PST NO, Single Break

Rated Operating Voltage — 115 VDC

Resistive Currant Rating — 130 Amps (see note 2)

Rupture Rating — 1300 Amps (see note 3)

General Characteristics

Temperature Range — -55°C to +85°C

Minimum Electrical Cycles — 50,000

Minimum Mechanical Cycles — 100,000 @ 32.5 A

Dielectric Strength — 1500 Vrms

Altitude — 50,000 ft

Weight, Max. — 1.35 lbs

Duty Cycle — Continuous (Electronically Economized)

Coil Operating Voltage — 28 Vdc

Drop Out Voltage — 1.5 to 7 Vdc

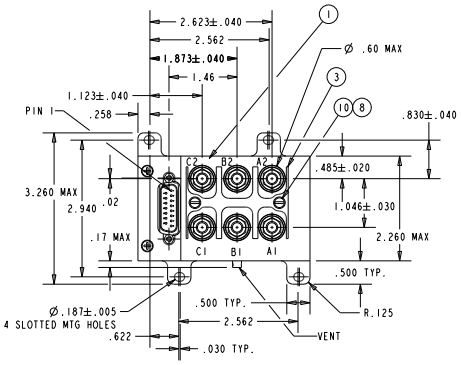

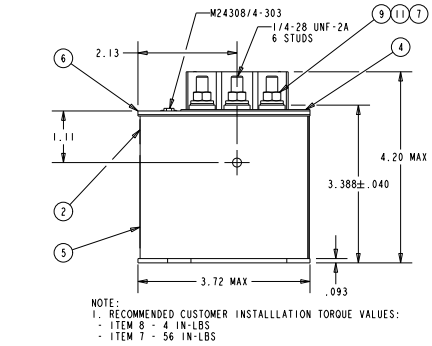

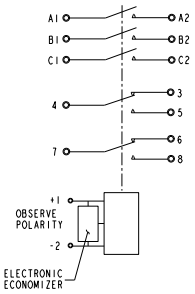

HARTMAN Part Number	Construction Type	Mounting Style	Coil Type	Circuit Config.	TE Part Number
B309A	Gasket Sealed	A	Continuous, Electronically Economized	1	1-1616975-7

NOTES

1. Other aux contact configurations available. Consult Factory.
2. Units with current ratings to 175A are available. Consult Factory.
3. Units with rupture ratings to 1750A are available. Consult Factory.

For factory-direct application assistance, phone 419-521-9500 or fax 419-526-2749.

Catalog 5-1773450-5
Revised 3-13

www.te.com

Dimensions are shown for reference purposes only. Specifications subject to change.

Dimensions are in millimeters unless otherwise specified.

USA: +1 800 522 6752
Asia Pacific: +86 0 400 820 6015
UK: +44 800 267 666

For additional support numbers please visit www.te.com

B-451 Series, Rated up to 175 Amps, 115/200 VAC, 400 Hz

Product Facts

- **3PDT, Magnetic latching**
- **Gasket sealed**
- **Auxiliary contacts available**
- **Meets many requirements of MIL-PRF-6106**

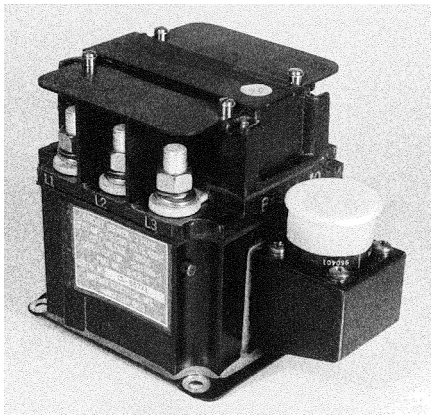

Performance Data

Electrical Characteristics

Contact Arrangement — 3PDT, Magnetic Latching

Rated Operating Voltage — 115/200 VAC, 400 Hz

Resistive Rating — 175 Amps

General Characteristics

Temperature Range — -55°C to +71°C

Operating Cycles (Life) at Rated Resistive Load, Min. — 50,000 cycles

Operating Cycles (Life) Mechanical, Min. — 100,000 cycles

Dielectric Strength —
All Circuits to Ground — 1,500 Vrms
Circuit to Circuit — 1,500 Vrms
Coil to Ground and Aux. Contacts — 1,000 Vrms

Insulation Resistance, Initial — 100 megohm min.

Altitude — 50,000 ft.

Weight, Max. — 2.44 lbs

Coil Characteristics

Duty Cycle — Continuous, self-deenergizing

Operating Voltage, Max. — 30 Vdc

Close Voltage @ 15 to 30 Vdc —
Resistance — 4.4 +10% Ohms
Current — 5 Amp Max.

Trip Voltage @ 15 to 30 Vdc —
Resistance — 5.0 +10% Ohms
Current — 5 Amp Max.

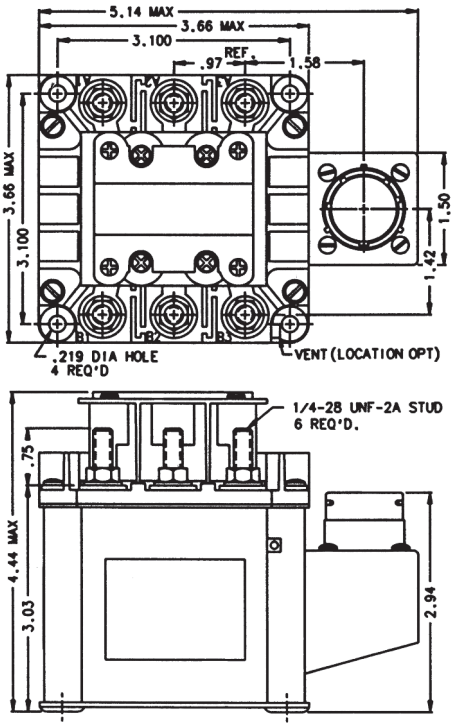

Mounting Style A

Circuit Configurations (Consult factory for other available circuit configurations)

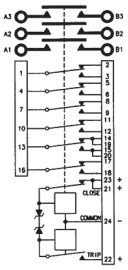

Circuit Configuration 1

HARTMAN Part Number	Construction Type	Mounting Style	Coil Type	Circuit Config.	TE Part Number
B451	Gasket/Vented	A	Continuous, Self-Deenergizing	1	1616023-3

For factory-direct application assistance, phone 419-521-9500 or fax 419-526-2749.

Catalog 5-1773450-5
Revised 3-13

www.te.com

Dimensions are shown for reference purposes only. Specifications subject to change.

Dimensions are in millimeters unless otherwise specified.

USA: +1 800 522 6752
Asia Pacific: +86 0 400 820 6015
UK: +44 800 267 666

For additional support numbers please visit www.te.com

B-312 Series, Rated up to 175 Amps, 253/440 VAC, 50-60 Hz

Product Facts

- **3PST NO, Double break**
- **Gasket sealed**
- **235/440 VAC, 50-60 Hz, 3 phase**
- **Auxiliary contacts available**
- **Meets many requirements of MIL-PRF-6106**

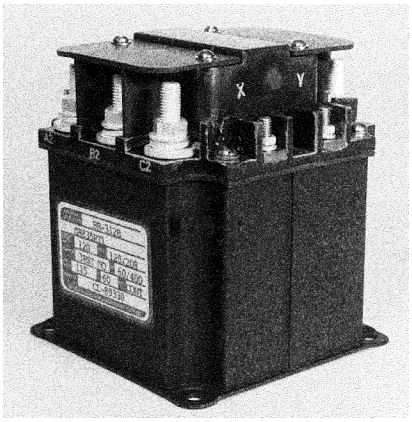

Performance Data

Electrical Characteristics

Contact Arrangement — 3PST NO, Double Break

Rated Operating Voltage — 253/440 VAC, 50-60 Hz, 3 phase

Current, Resistive — 175 Amps

Current, Inductive — B312DB — 70 Amps

Current, Motor — 150 Amps

Current, Rupture — 1,500 Amps

General Characteristics

Temperature Range — -55°C to +71°C

Operating Cycles (Life) at Rated Resistive Load, Min. — 50,000 cycles

Operating Cycles (Life) Mechanical, Min. — 100,000 cycles

Dielectric Strength —
All Circuits to Ground — 1,500 Vrms
Circuit to Circuit — 1,500 Vrms
Coil to Ground and Aux. Contacts — 1,000 Vrms

Weight, Max. — 3.0 lbs

Coil Characteristics

Duty Cycle — Continuous, economizing

Operating Voltage, Nom. — 28 Vdc

Pickup Voltage — 18 Vdc

Dropout Voltage —
B312DB — 1.5 to 7 Vdc
B312CH — 1 to 7 Vdc

For factory-direct application assistance, phone 419-521-9500 or fax 419-526-2749.

Catalog 5-1773450-5
Revised 3-13

www.te.com

Dimensions are shown for reference purposes only. Specifications subject to change.

Dimensions are in millimeters unless otherwise specified.

USA: +1 800 522 6752
Asia Pacific: +86 0 400 820 6015
UK: +44 800 267 666

For additional support numbers please visit www.te.com

B-312 Series, Rated up to 175 Amps, 253/440 VAC, 50-60 Hz (Continued)

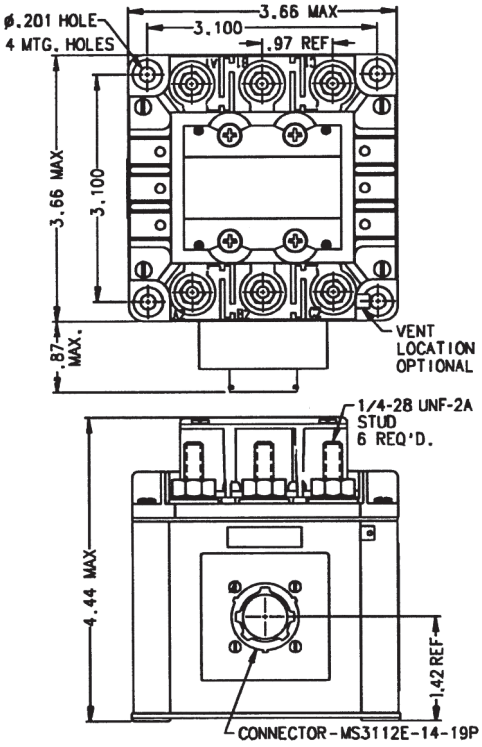

Mounting Style A

Circuit Configurations (Consult factory for other available circuit configurations)

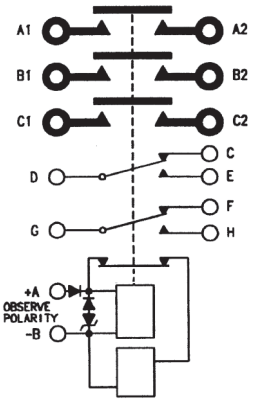

Circuit Configuration 1

HARTMAN Part Number	Construction Type	Mounting Style	Coil Type	Circuit Config.	TE Part Number
B-312DB	Gasket/Vented	A	Continuous, Economizing	1	1616004-7

For factory-direct application assistance, phone 419-521-9500 or fax 419-526-2749.

Dimensions are shown for reference purposes only. Specifications subject to change.

Dimensions are in millimeters unless otherwise specified.

USA: +1 800 522 6752
Asia Pacific: +86 0 400 820 6015
UK: +44 800 267 666

For additional support numbers please visit www.te.com

KA175 Series, Rated up to 175 Amps, 115 or 230 VAC, 400-800 Hz

Lightweight, High Performance

Product Facts

- 3PST NO, Side stable
- Gasket sealed
- Buss bar mount

Performance Data

Electrical Characteristics

Contact Arrangement — 3PST NO, Side Stable

Rated Operating Voltage — 115/230 VAC, 230/460 VAC 400-800 Hz

Resistive Rating — 175 Amps

General Characteristics

Temperature Range — -55°C to +85°C

Operating Cycles (Life) at Rated Resistive Load, Min. — 50,000 cycles

Operating Cycles (Life) Mechanical, Min. — 100,000 cycles

Weight, Max. — 1.25 lbs

Coil Characteristics

Duty Cycle — Continuous, economizing

Operating Voltage, Nom. — 28 Vdc

Pickup Voltage — 18 Vdc

Dropout Voltage — 1.0 to 7 Vdc

Circuit Configurations

(Consult factory for other available circuit configurations)

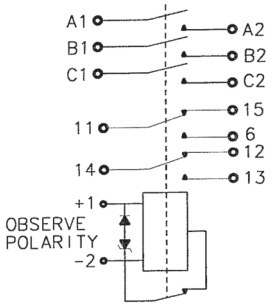

Circuit Configuration 1

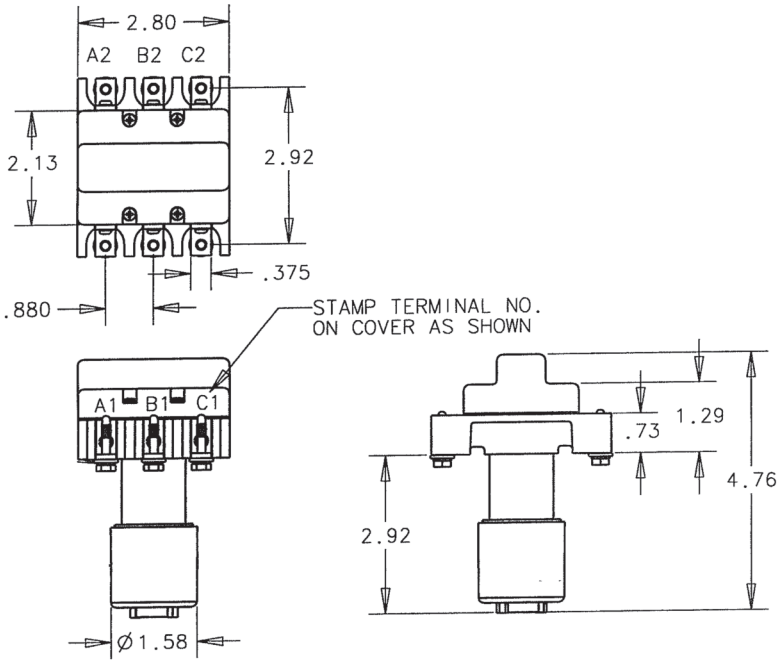

Mounting Style A

For factory-direct application assistance, phone 419-521-9500 or fax 419-526-2749.

HARTMAN Part Number	Construction Type	Mounting Style	Coil Type	Circuit Config.	TE Part Number
KA175B3C	Gasket/Vented	A	Continuous, Economizing	1	2-1616960-7

Catalog 5-1773450-5
Revised 3-13

www.te.com

Dimensions are shown for reference purposes only. Specifications subject to change.

Dimensions are in millimeters unless otherwise specified.

USA: +1 800 522 6752
Asia Pacific: +86 0 400 820 6015
UK: +44 800 267 666

For additional support numbers please visit www.te.com

SA136F Series, Rated up to 175 Amps, 240/416 VAC

Product Facts

- **3PST NO, Side stable**
- **Gasket/Vented sealed**

Performance Data

Electrical Characteristics

Main Contacts —

Contact Arrangement — 3PST NO, Double Break

Rated Operating Voltage — 240/416 VAC, 50/60/400 Hz

Resistive Rating — 240 Amps

Rupture Rating — 2400 Amps

Auxiliary Contacts — 1SPST NO

Contact Arrangement — 4PST NC

Voltage, Nom. — 28 Vdc

Resistive Rating — 5 Amps, 28 Vdc; 10 Amps, 120 VAC

General Characteristics

Operating Cycles (Life) at Rated Resistive Load, Min. — 50,000 cycles

Operating Cycles (Life) Mechanical, Min. — 100,000 cycles

Weight, Max. — 2.8 lbs

Coil Characteristics

Duty Cycle — Continuous, economizing

Operating Voltage, Nom. — 24 Vdc

Pickup Voltage, Max. — 18 Vdc

Dropout Voltage — 1 to 10 Vdc

Coil Resistance — 240A
Rupture — 2400A

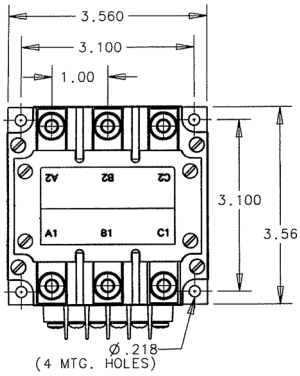

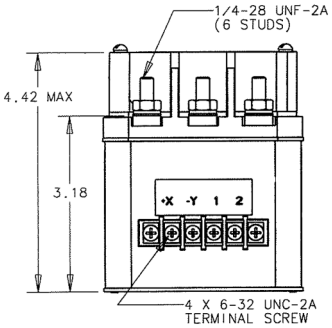

Mounting Style A

Circuit Configurations (Consult factory for other available circuit configurations)

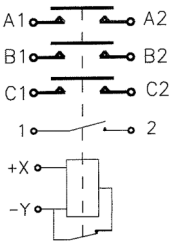

Circuit Configuration 1

HARTMAN Part Number	Construction Type	Mounting Style	Coil Type	Circuit Config.	TE Part Number
SA136F	Gasket/Vented	A	Continuous	1	1616948-7

For factory-direct application assistance, phone 419-521-9500 or fax 419-526-2749.

Catalog 5-1773450-5
Revised 3-13

www.te.com

Dimensions are shown for reference purposes only. Specifications subject to change.

Dimensions are in millimeters unless otherwise specified.

USA: +1 800 522 6752
Asia Pacific: +86 0 400 820 6015
UK: +44 800 267 666

For additional support numbers please visit www.te.com

B-312 Series, Rated up to 200 Amps, 115 VAC, 400 Hz

Product Facts

- 3PST NO
- Gasket sealed
- 115 VAC, 400 Hz

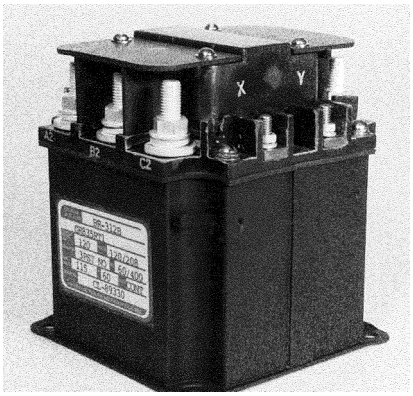

Performance Data

Electrical Characteristics

Main Contacts —

Contact Arrangement — 3PST NO, Double Break

Rated Operating Voltage — 115 VAC, 400 Hz

Resistive Rating — 200 Amps

Inductive Rating — 200 Amps

Rupture Rating — 2000 Amps

Auxiliary Contacts —

Contact Arrangement — 4PST NC

Voltage, Nom. — 28 Vdc or 115 VAC, 400 Hz

Resistive Rating — 5 Amps

General Characteristics

Temperature Range — -55°C to +71°C

Operating Cycles (Life) at Rated Resistive Load, Min. — 50,000 cycles

Operating Cycles (Life) Mechanical, Min. — 100,000 cycles

Weight, Max. — 3 lbs

Coil Characteristics

Duty Cycle — Continuous, economizing

Operating Voltage, Nom. — 28 Vdc

Pickup Voltage, Max. — 18 Vdc

Dropout Voltage — 1 to 7 Vdc

Coil Resistance —
Pickup — 12 Ohms ± 20%
Holding — 60 Ohms ± 20%

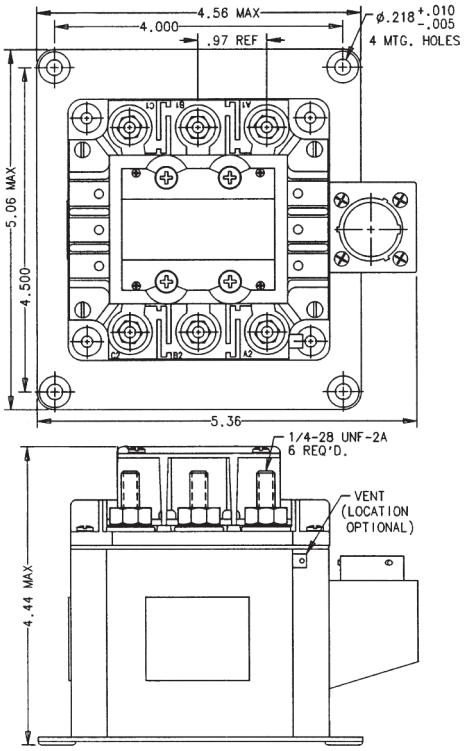

Mounting Style A

Circuit Configurations (Consult factory for other available circuit configurations)

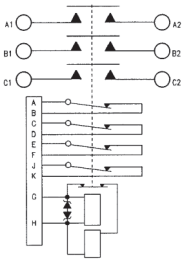

Circuit Configuration 1

HARTMAN Part Number	Construction Type	Mounting Style	Coil Type	Circuit Config.	TE Part Number
B-312CV	Gasket/Vented	A	Continuous, Economizing	1	1616004-5

For factory-direct application assistance, phone 419-521-9500 or fax 419-526-2749.

Catalog 5-1773450-5
Revised 3-13

www.te.com

Dimensions are shown for reference purposes only. Specifications subject to change.

Dimensions are in millimeters unless otherwise specified.

USA: +1 800 522 6752
Asia Pacific: +86 0 400 820 6015
UK: +44 800 267 666

For additional support numbers please visit www.te.com

B-393 Series, Rated up to 260 Amps, 120/208 VAC, 400 Hz

Product Facts

- **3PDT, Center off, double break**
- **Gasket sealed**

Performance Data

Electrical Characteristics

Main Contacts —

Contact Arrangement — 3PDT, Center Off, Double Break

Rated Operating Voltage — 120/208 VAC, 400 Hz

Resistive Rating — 260 Amps

Inductive Rating — 260 Amps

Rupture Rating — 2600 Amps

Auxiliary Contacts —

Contact Arrangement — 4PST NO, 2PST NC

Resistive Rating — 5 Amps

Inductive Rating — 5 Amps

Lamp Rating — 5 Amps

General Characteristics

Temperature Range — -55°C to +71°C

Operating Cycles (Life) at Rated Resistive Load — 50,000 cycles

Operating Cycles (Life) Mechanical — 100,000 cycles

Altitude Max. — 40,000 ft.

Weight — 5 lbs

Coil Characteristics

Duty Cycle — Continuous, economizing

Operating Voltage, Nom. — 28 Vdc

Pickup Voltage, Max. — 18 Vdc

Dropout Voltage —
R-S Coil — 14 Vdc
W-H Coil — 7 Vdc

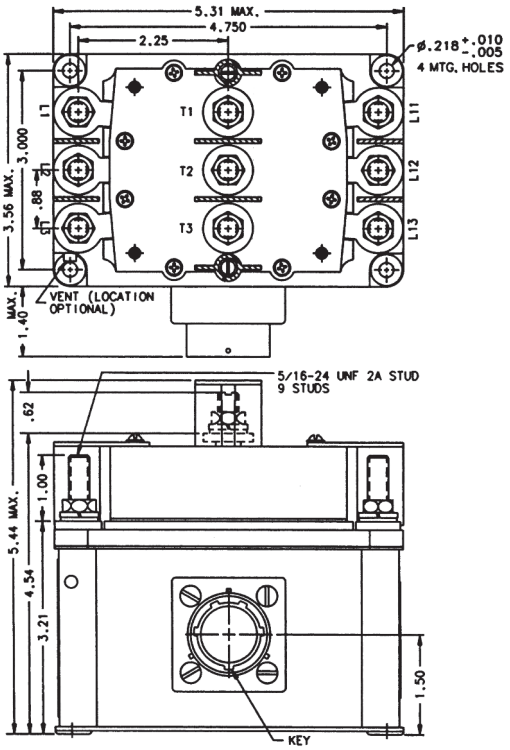

Mounting Style A

Circuit Configurations (Consult factory for other available circuit configurations)

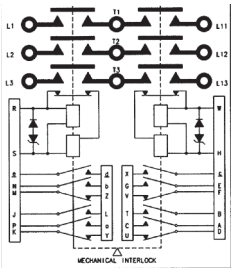

Circuit Configuration 1

HARTMAN Part Number	Construction Type	Mounting Style	Coil Type	Circuit Config.	TE Part Number
B-393T	Gasket/Vented	A	Continuous, Economizing	1	1616044-5

For factory-direct application assistance, phone 419-521-9500 or fax 419-526-2749.

Catalog 5-1773450-5
Revised 3-13

www.te.com

Dimensions are shown for reference purposes only. Specifications subject to change.

Dimensions are in millimeters unless otherwise specified.

USA: +1 800 522 6752
Asia Pacific: +86 0 400 820 6015
UK: +44 800 267 666

For additional support numbers please visit www.te.com

B-429 Series, 260/350 Amps, 115/200 VAC or 120/208 VAC

Product Facts

- **3PST NO, Double break**
- **Gasket sealed**
- **Auxiliary contacts available**
- **Meets many requirements of MIL-PRF-6106**

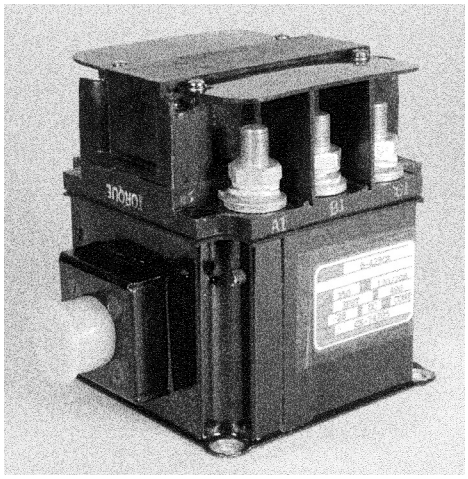

Performance Data

Electrical Characteristics

Contact Arrangement — 3PST NO, Double Break

Rated Operating Voltage —
B-429-1 and B-429W — 115/200 VAC, 400 Hz, 3 phase
B-429CA — 120/208 VAC

Resistive Rating —
B-429-1 — 275 Amps
B-429CA — 350 Amps
B-429W — 260 Amps

General Characteristics

Temperature Range — -55°C to +85°C

Operating Cycles (Life) at Rated Resistive Load, Min. — 50,000 cycles

Operating Cycles (Life) Mechanical, Min. — 100,000 cycles

Dielectric Strength —
All Circuits to Ground — 1,500 Vrms
Circuit to Circuit — 1,500 Vrms
Coil to Ground and Aux. Contacts — 1,000 Vrms

Insulation Resistance, Initial — 100 megohm min.

Altitude — 50,000 ft.

Weight, Max. — 4.0 lbs

Coil Characteristics

Duty Cycle — Continuous, economized with suppression (Type A or B, See diagram below)

Operating Voltage, Nom. — 28 Vdc

Pickup Voltage, Max. —
Coil Type A — 15 Vdc
Coil Type B — 18 Vdc

Dropout Voltage, Max. —
Coil Type A — 1.5 to 10 Vdc
Coil Type B — 1 to 7 Vdc

Coil Current Inrush —
Coil Type A — 6 Amps
Coil Type B — 2.7 Amps

Coil Current Holding —
Coil Type A — 0.6 Amps
Coil Type B — 0.56 Amps

Coil Type

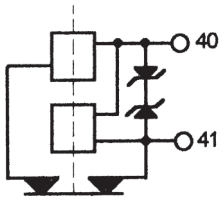

A — Continuous, Economized with Suppression

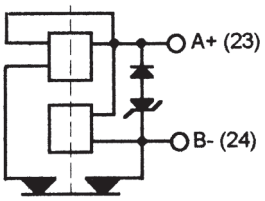

B — Continuous, Economized with Suppression

For factory-direct application assistance, phone 419-521-9500 or fax 419-526-2749.

Catalog 5-1773450-5
Revised 3-13

www.te.com

Dimensions are shown for reference purposes only. Specifications subject to change.

Dimensions are in millimeters unless otherwise specified.

USA: +1 800 522 6752
Asia Pacific: +86 0 400 820 6015
UK: +44 800 267 666

For additional support numbers please visit www.te.com

B-429 Series, 260/350 Amps, 115/200 VAC or 120/208 VAC (Continued)

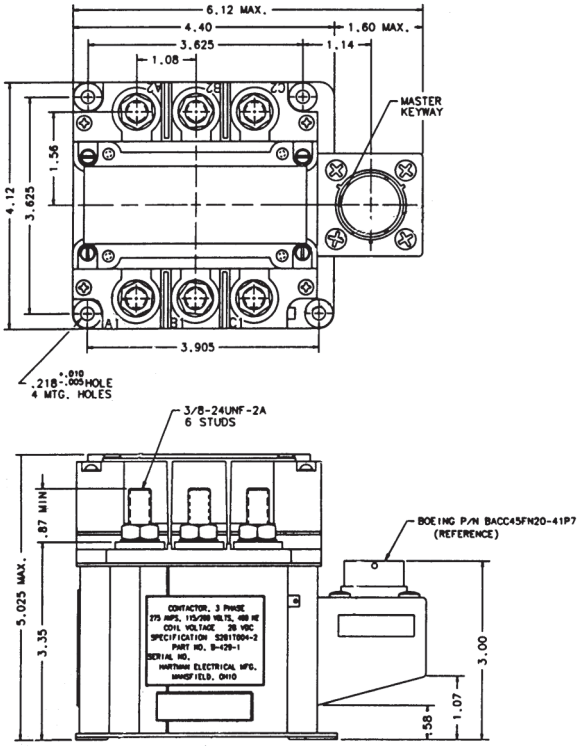

Mounting Style A

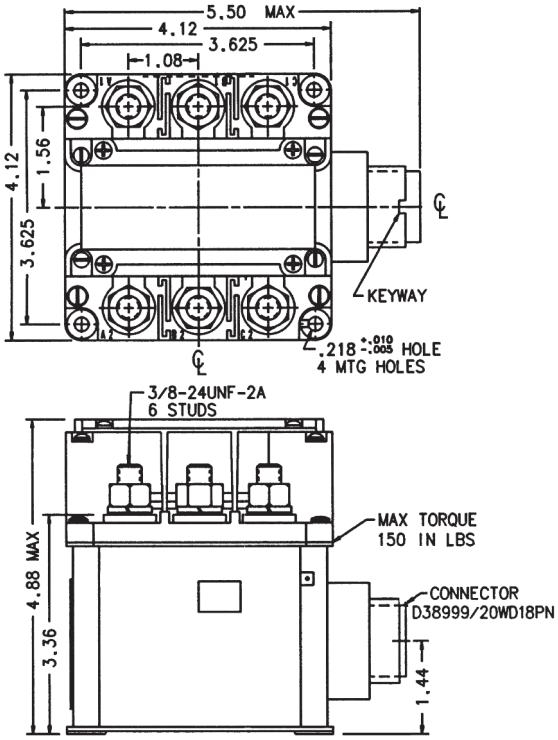

Mounting Style B

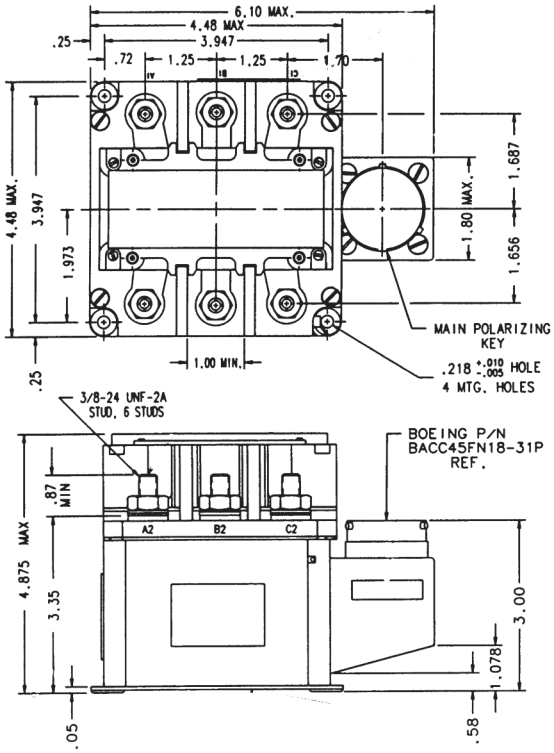

Mounting Style C

For factory-direct application assistance, phone 419-521-9500 or fax 419-526-2749.

Dimensions are shown for reference purposes only. Specifications subject to change.

Dimensions are in millimeters unless otherwise specified.

USA: +1 800 522 6752
Asia Pacific: +86 0 400 820 6015
UK: +44 800 267 666

For additional support numbers please visit www.te.com

B-429 Series, 260/350 Amps, 115/200 VAC or 120/208 VAC (Continued)

Circuit Configurations (Consult factory for other available circuit configurations)

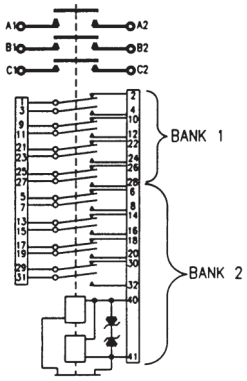

Circuit Configuration 1

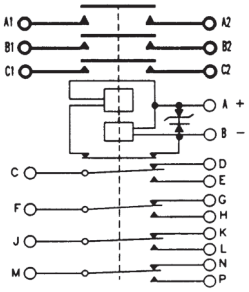

Circuit Configuration 2

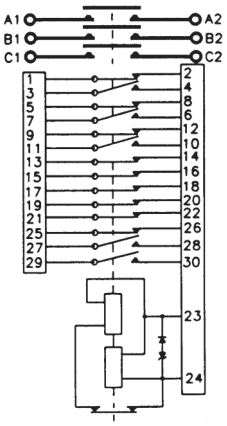

Circuit Configuration 3

HARTMAN Part Number	Construction Type	Mounting Style	Coil Type	Circuit Config.	TE Part Number
B-429W	Gasket/Vented	B	B	3	1616005-6
B-429-1	Gasket/Vented	A	A	1	1616005-1
B-429CA	Gasket/Vented	A	B	2	1616005-4

B-430 Series, Rated up to 275 Amps, 115/200 VAC, 400 Hz

Product Facts

- **3PST, Double break, magnetic latching**
- **Gasket sealed**
- **Auxiliary contacts available**
- **Meets many requirements of MIL-PRF-6106**

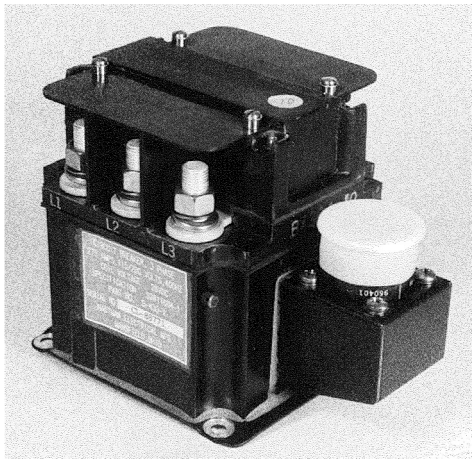

Performance Data

Electrical Characteristics

Contact Arrangement — 3PST, Double Break, Magnetic Latching

Rated Operating Voltage — 115/200 VAC, 400 Hz, 3 phase

Resistive Rating — 275 Amps

Interrupt Rating — 2,000 Amps

General Characteristics

Temperature Range — -55°C to +85°C

Operating Cycles (Life) at Rated Resistive Load, Min. — 50,000 cycles

Operating Cycles (Life) Mechanical, Min. — 100,000 cycles

Dielectric Strength —
All Circuits to Ground — 1,500 Vrms
Circuit to Circuit — 1,500 Vrms
Coil to Ground and Aux. Contacts — 1,000 Vrms

Insulation Resistance, Initial — 100 megohm min.

Altitude — 45,000 ft.

Weight, Max. — 4.0 lbs

Coil Characteristics

Duty Cycle —
B-430-1 — Continuous, self-deenergizing (Type A, See diagram below)
B-430Z — Continuous, self-deenergizing with suppression (Type B, See diagram below)

Operating Voltage Close, @ 85°C —
Min. — 15 Vdc
Max. — B-430-1 — 28 Vdc
B-430Z — 29 Vdc

Operating Voltage Trip, @ 85°C —
Min. — 15 Vdc
Max. — B-430-1 — 28 Vdc
B-430Z — 29 Vdc

Coil Current Closing, Max. — 6 Amps

Coil Current Trip, Max. — 6 Amps

Coil Type

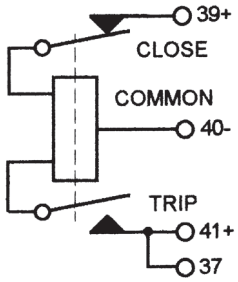

A — Continuous, Self-Deenergizing

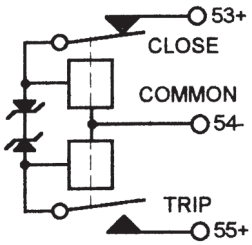

B — Continuous, Self-Deenergizing with Suppression

For factory-direct application assistance, phone 419-521-9500 or fax 419-526-2749.

Catalog 5-1773450-5
Revised 3-13

www.te.com

Dimensions are shown for reference purposes only. Specifications subject to change.

Dimensions are in millimeters unless otherwise specified.

USA: +1 800 522 6752
Asia Pacific: +86 0 400 820 6015
UK: +44 800 267 666

For additional support numbers please visit www.te.com

B-430 Series, Rated up to 275 Amps, 115/200 VAC, 400 Hz (Continued)

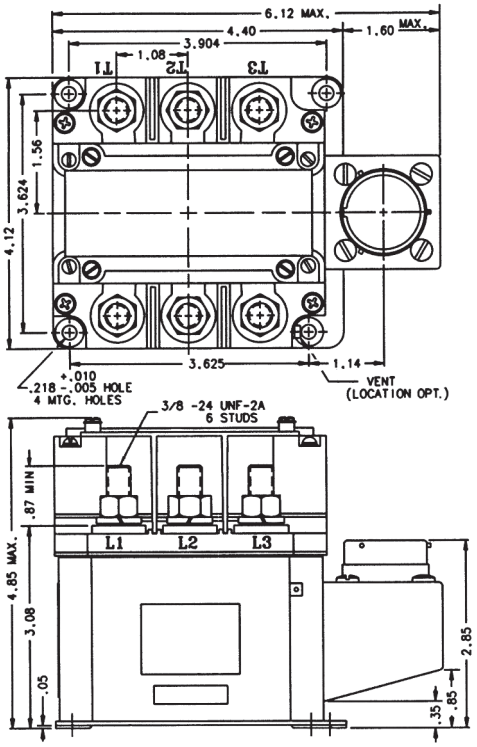

Mounting Style A

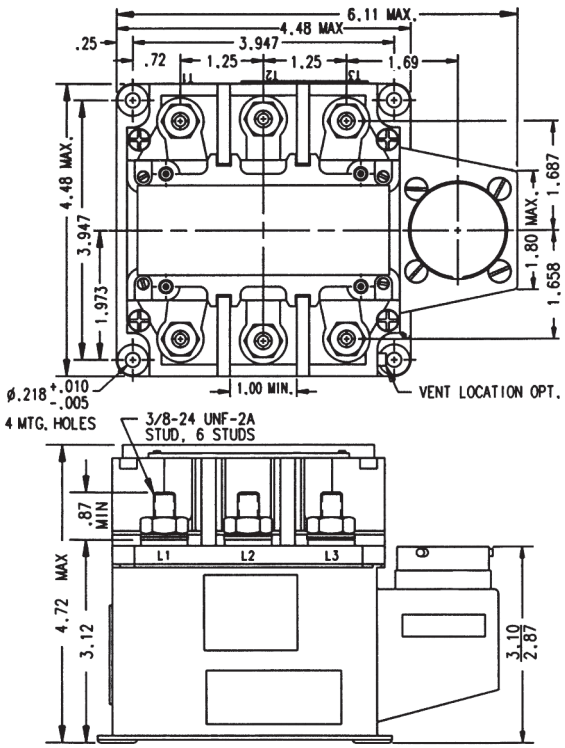

Mounting Style B

Circuit Configurations (Consult factory for other available circuit configurations)

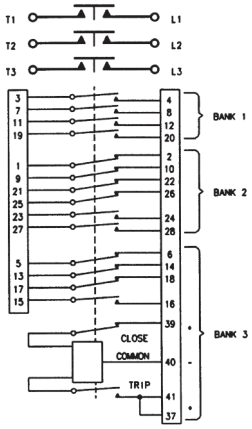

Circuit Configuration 1

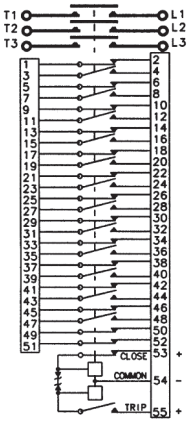

Circuit Configuration 2

HARTMAN Part Number	Construction Type	Mounting Style	Coil Type	Circuit Config.	TE Part Number
B-430-1	Gasket/Vented	A	A	1	1616023-1
B-430Z	Gasket/Vented	B	B	2	1616023-2

For factory-direct application assistance, phone 419-521-9500 or fax 419-526-2749.

Dimensions are shown for reference purposes only. Specifications subject to change.

Dimensions are in millimeters unless otherwise specified.

USA: +1 800 522 6752
Asia Pacific: +86 0 400 820 6015
UK: +44 800 267 666

For additional support numbers please visit www.te.com

B-484 Series, Rated up to 500 Amps, 115/200 VAC, 400 Hz

Product Facts

- **3PDT, Magnetic latching**
- **Gasket sealed**
- **Auxiliary contacts available**
- **Meets many requirements of MIL-PRF-6106**

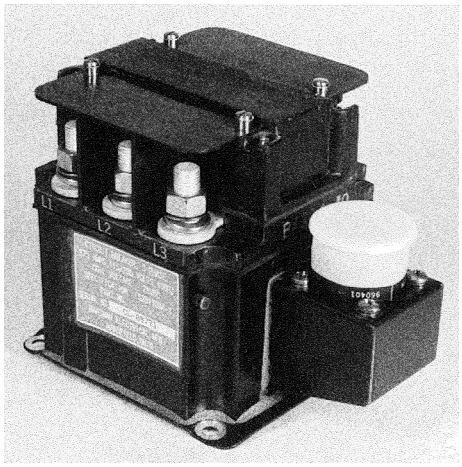

Performance Data

Electrical Characteristics

Contact Arrangement — 3PDT, Magnetic Latching

Rated Operating Voltage — 115/200 VAC, 400 Hz, 3 phase

Resistive Rating, Continuous — 500 Amps

Inductive Rating — 500 Amps

Interrupt Rating — 6,500 Amps

General Characteristics

Temperature Range — -54°C to +71°C

Operating Cycles (Life) at Rated Resistive Load, Min. — 50,000 cycles

Operating Cycles (Life) Mechanical, Min. — 100,000 cycles

Dielectric Strength —
All Circuits to Ground — 1,500 Vrms
Circuit to Circuit — 1,500 Vrms
Coil to Ground and Aux. Contacts — 1,000 Vrms

Insulation Resistance, Initial — 100 megohm min.

Altitude — 45,000 ft.

Weight, Max. — 4.5 lbs

Coil Characteristics

Duty Cycle — Continuous, self-deenergizing

Close Voltage —
Min. — 15 Vdc
Max. — 29 Vdc

Trip Voltage —
Min. — 15 Vdc
Max. — 29 Vdc

For factory-direct application assistance, phone 419-521-9500 or fax 419-526-2749.

Catalog 5-1773450-5
Revised 3-13

www.te.com

Dimensions are shown for reference purposes only. Specifications subject to change.

Dimensions are in millimeters unless otherwise specified.

USA: +1 800 522 6752
Asia Pacific: +86 0 400 820 6015
UK: +44 800 267 666

For additional support numbers please visit www.te.com

B-484 Series, Rated up to 500 Amps, 115/200 VAC, 400 Hz (Continued)

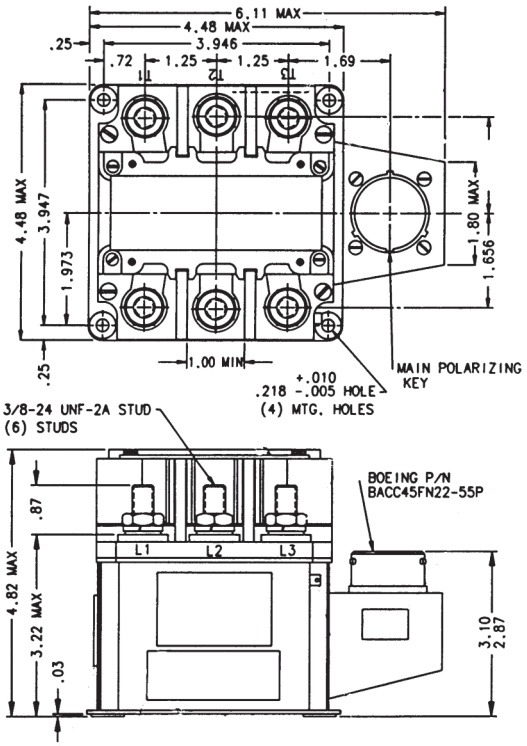

Mounting Style A

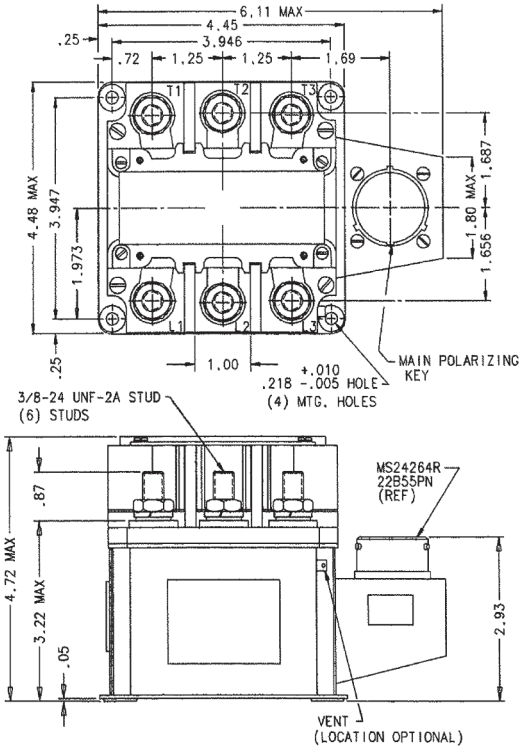

Mounting Style B

Circuit Configurations (Consult factory for other available circuit configurations)

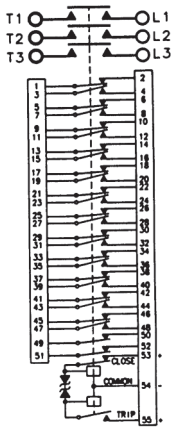

Circuit Configuration 1

HARTMAN Part Number	Construction Type	Mounting Style	Coil Type	Circuit Config.	TE Part Number
B-484	Gasket/Vented	A	Continuous, Self-Deenergizing	1	1616023-4
B-484C	Gasket/Vented	B	Continuous, Self-Deenergizing	1	1616023-5

For factory-direct application assistance, phone 419-521-9500 or fax 419-526-2749.

Dimensions are shown for reference purposes only. Specifications subject to change.

Dimensions are in millimeters unless otherwise specified.

USA: +1 800 522 6752
Asia Pacific: +86 0 400 820 6015
UK: +44 800 267 666

For additional support numbers please visit www.te.com

Cross Reference

Main Current Rating	AC/DC	Rating	Main Contact Config.	Operating Mode	Aux. Contact Config.	Coil Voltage (VDC)	Seal Type	Duty Cycle	Coil Trans. Voltage	Hartman Part No.	TE Part No.
25	AC	115	3PDT	Side Stable	–	28	Hermetic	Cont.	–	DH-14B	1-1616522-4
		115	3PDT	Side Stable	–	115V	Hermetic	Cont.	–	DHR-14B	1-1616037-2
		115/200	3PDT	Side Stable	–	28-31	Hermetic	Cont.	42	DH-14B-3	1616037-1
		115/200	3PDT	Side Stable	–	115V	Hermetic	Cont.	–	DHR-14BA	1-1616037-3
		115/200	3PST NO	Side Stable	–	28	Hermetic	Cont.	42	DH-14CE	1616017-1
30	AC	115	3PDT	Center Off	–	115V	Hermetic	Cont.	–	DHR-18-1	1616050-9
50	AC	115	DPDT	Side Stable	–	115V	Hermetic	Cont.	–	DHR-7K	1616522-2
		115	3PDT	Side Stable	SPST NO	28	Hermetic	Cont.	–	DH-7BB	1616037-7
		115/200	3PDT	Side Stable	DPDT	18-32	Hermetic	Cont.	50	DH-7ZAB	1-1616037-1
		120/208	3PDT	Side Stable	–	115V	Hermetic	Cont.	–	DHR-7B	1-1616037-6
		120/208	3PDT	Side Stable	–	115V	Hermetic	Cont.	–	DHR-7BE	1-1616037-7
		115	3PST	Center Off	–	28	Gasket/Vented	Cont.	20	D-18F	1616048-4
		115/200	3PDT	Center Off	–	28	Gasket/Vented	Cont.	–	D-18	1616048-1
		115/200	3PDT	Center Off	SPST NO Each Side	28	Gasket/Vented	Cont.	–	D-180A	1616048-2
		115/200	3PDT	Center Off	–	28	Gasket/Vented	Cont.	45	D-18AA	1616048-3
		115/200	3PDT	Center Off	6PDT	28	Gasket/Vented	Cont.	45	D-18ZZC	1-1616957-3
		115	3PDT	Center Off	–	28	Hermetic	Cont.	–	DH-18	1616050-1
		115/200	3PDT	Center Off	–	28-30	Hermetic	Cont.	–	DH-18Y	1616524-3
		115	SPDT	Center Off	–	35	Gasket/Vented	Cont.	–	DR-18E-5	1616099-1
50	AC	115/200	3PST	Side Stable	–	28	Gasket/Vented	Cont.	50	D-7M	1616016-2
		115/230	SPST	Side Stable	–	28	Gasket/Vented	Cont.	–	D7MA	1616016-3
		115/200	3PST NC	Side Stable	SPDT	28	Gasket/Vented	Cont.	45	D-7MM	1616016-4
		115/200	3PST NO	Side Stable	SPST NO SPST NC	115	Gasket/Vented	Cont.	–	DR-7VC	1616018-1
		115	3PST NO	Side Stable	SPST NO	28	Hermetic	Cont.	–	DH-7N	1616017-9
		115	3PST NO	Side Stable	SPST NO(2) SPST NC	28	Hermetic	Cont.	50	DH-7ZG-1	1-1616017-0
		115	3PST NO	Side Stable	–	120V	Hermetic	Cont.	–	DHR-7M	1616518-2
		115	3PST NO	Side Stable	DPST NC SPST NO	115V	Hermetic	Cont.	–	DHR-7ZG	1-1616017-2
		115/200	3PDT	Side Stable	SPDT	28-30	Hermetic	Cont.	50	DH-7GR	1616037-9
		115/200	3PDT	Side Stable	SPDT	28	Gasket/Vented	Cont.	45	D-7GRZ	1616036-5
		115/208	3PDT	Side Stable	–	18-30	Gasket/Vented	Cont.	–	D-7BS	1616036-1
		115/208	3PDT	Side Stable	SPDT	28	Gasket/Vented	Cont.	–	D-7GR	1616036-2
		115/208	SPDT	Side Stable	SPDT	28	Gasket/Vented	Cont.	–	D-7GR-2	1616036-3
		115/208	3PDT	Side STable	SPDT	28	Gasket/Vented	Cont.	45	D-7GR-3	1616036-4
		115	3PDT	Side Stable	SPST NC	18-30	Hermetic	Cont.	–	DH-7BC	1616037-8
50	AC	115	3PST NO	Side Stable	–	28	Hermetic	Cont.	–	BH-316	1616008-4
		115	3PST NO	Side Stable	1NO, 1NC	28	Hermetic	Cont.	–	BH-316A	1616008-5
		115	3PST NO	Side Stable	–	28	Hermetic	Cont.	45	BH-316C	1-1616520-0
		115/200	TPST NO	Side Stable	–	28	Hermetic	Cont.	–	BH-316D	1616008-6
60	AC	200	3PDT	Side Stable	SPDT	28	Gasket/Vented	Cont.	–	B-138BH	1616028-1
		200	3PDT	Side Stable	DPDT	28	Gasket/Vented	Cont.	–	B-138XAH	1616028-2
		115/200	3PDT	Side Stable	DPDT	28	Gasket/Vented	Cont.	42	B-138XEH	1616028-3
		200	3PDT	Center Off	SPST NO	28	Gasket/Vented	Cont.	–	B-140V	1-1616043-0
		115/200	3PDT NO	Center Off	DPST NC	28	Gasket/Vented	Cont.	–	B-140BH	1616043-9
		120/208	3PDT NO	Center Off	6PDT	28	Gasket/Vented	Cont.	75	B-140AP-1	1616043-7
		115/200	3PST NO	Side Stable	4PDT	28	Gasket/Vented	Cont.	45	B-138S	1616002-5

For factory-direct application assistance, phone 419-521-9500 or fax 419-526-2749.

Catalog 5-1773450-5
Revised 3-13

www.te.com

Dimensions are shown for reference purposes only. Specifications subject to change.

Dimensions are in millimeters unless otherwise specified.

USA: +1 800 522 6752
Asia Pacific: +86 0 400 820 6015
UK: +44 800 267 666

For additional support numbers please visit www.te.com

Cross Reference (Continued)

Main Current Rating	AC/DC	Rating	Main Contact Config.	Operating Mode	Aux. Contact Config.	Coil Voltage (VDC)	Seal Type	Duty Cycle	Coil Trans. Voltage	Hartman Part No.	TE Part No.
100	AC	115/200	3PDT	Side Stable	SPST NC	28	Gasket/Vented	Cont.	–	D-25BD	1616034-3
		115/200	3PDT	Side Stable	–	28	Hermetic	Cont.	–	DH-25B	1616037-2
		115/200	3PDT NC	Side Stable	DPDT	28	Hermetic	Cont.	–	DH-25BA	1616037-3
		115/200	3PDT	Side Stable	–	115	Hermetic	Cont.	–	DHR-25BG	1-1616037-5
		115/200	3PDT	Center Off	–	28	Gasket/Vented	Cont.	–	D-31C	1616049-1
120	AC	115/200	3PDT	Center Off	5PST NC	28	Gasket/Vented	Cont.	–	D-31TH	1616524-5
		115/208	3PDT	Center Off	6PDT	28	Gasket/Vented	Cont.	42	D-31DB	1616049-2
		115/208	3PDT	Center Off	4PDT	18-30	Hermetic	Cont.	42	DH-31DAA	1616050-6
		115/200	3PDT	Center Off	6PDT	28	Hermetic	Cont.	–	DH-31A	1616050-4
		115/208	3PDT	Center Off	4PDT	18-30	Hermetic	Cont.	42	DH-31DA	1616050-5
		115/200	3PDT	Center Off Latching	6PDT	18-30	Hermetic	Cont.	50	DHL-31B	1616050-8
		115/200	3PST NO	Side Stable	(1)SPST NC (1) SPDT	28	Gasket/Vented	Cont.	–	D-25CF	1616015-1
		115/200	3PST NO	Side Stable	(1)SPST NO (1) SPST NC	28	Hermetic	Cont.	42	DH-25CU	1616017-4
125	AC	115/200	3PDT	Side Stable	DPDT	28	Gasket/Vented	Cont.	45	D-25BAH	1616034-2
130	AC	115/200	3PST NO	–	3PST NO	28	Gasket	Cont.Econ	–	B309A	1-1616975-7
175	AC	115/200	3PST	Mag Latching	6PDT	15-30	Gasket/Vented	Cont.	42	B-451	1616023-3
175	AC	253/440	3PST NO	–	DPDT	28	Gasket/Vented	Cont.Econ.	45	B-312DB	1616004-7
		115	3PST NO	Side Stable	2PDT	28	Gasket/Vented	Cont. Econ.	–	SA-136F	1616948-7
		115/200	3ST NO	Side Stable	2DT	28	Gasket	Cont. Econ.	42	KA175B3C	2-1616960-7
200	AC	115	3PST NO	–	4PST NC	28	Gasket/Vented	Cont. Econ.	45	B-312CV	1616004-5
260	AC	120/208	3PDT	Center Off	4PST NO 2PST NC	28	Gasket/Vented	Cont. Econ.	45	B-393T	1616044-5
		115/200	3PST NO	Side Stable	(5)SPST NO (9 SPST NC	28	Gasket/Vented	Cont. Econ.	45	B-429W	1616005-6
275	AC	115/200	3PST	Mag Latching	(7)SPST NO (7)2PST NC	28	Gasket/Vented	Cont. Econ.	45	B-430-1	1616023-1
		115/200	3PST	Mag Latching	(12)SPST NO (14 SPST NC	28	Gasket/Vented	Cont. Econ.	45	B-430Z	1616023-2
275	AC	115/200	3PST NO	Side Stable	(8)SPST NO	28	Gasket/Vented	Cont. Econ	45	B-429-1	1616005-1
350	AC	120/208	3PST NO	Side Stable	4SPDT	28	Gasket/Vented	Cont.	45	B-429CA	1616005-4
500	AC	115/200	3PST	Mag Latching	(12)SPST NO (14)2PST NC	15-29	Gasket/Vented	Cont.	45	B-484	1616023-4
		115/200	3PST	Mag Latching	(12)SPST NO (14 SPST NC	15-29	Gasket/Vented	Cont.	45	B-484C	1616023-5

For factory-direct application assistance, phone 419-521-9500 or fax 419-526-2749.

Catalog 5-1773450-5
Revised 3-13

www.te.com

Dimensions are shown for reference purposes only. Specifications subject to change.

Dimensions are in millimeters unless otherwise specified.

USA: +1 800 522 6752
Asia Pacific: +86 0 400 820 6015
UK: +44 800 267 666

For additional support numbers please visit www.te.com

K Series Connectors

Product Facts

- Light weight
- Small package size
- Small footprint
- Easy to package in panel assemblies
- Buss bar mount or chassis mount
- Designed to meet the applicable portions of MIL-PRF-6106
- 10X rupture current

TE HARTMAN brand of K Series contactors offer outstanding performance and reliability in a highly efficient package. The HARTMAN brand K-Series are among the smallest and lightest 200-1000 ampere DC contactors available in the aerospace industry.

These highly flexible buss bar mounted or chassis mounted units are designed for either continuous or start duty applications in the DC power distribution systems of military and commercial aircraft and ground vehicles.

For factory-direct application assistance, phone 419-521-9500 or fax 419-526-2749.

Dimensions are shown for reference purposes only. Specifications subject to change.

Dimensions are in millimeters unless otherwise specified.

USA: +1 800 522 6752
Asia Pacific: +86 0 400 820 6015
UK: +44 800 267 666

For additional support numbers please visit www.te.com

K Series, Rated up to 200 Amps, 28 Vdc

Product Facts

- **SPST NO, Double break**
- **Buss bar or chassis mount available**
- **Gasket sealed**
- **Auxiliary contacts available**
- **Meets many requirements of MIL-PRF-6106**

Performance Data

Electrical Characteristics

Contact Arrangement — SPST NO, Double Break

Rated Operating Voltage — 28 Vdc

Resistive Rating — 200 Amps

Rupture Rating — 2,000 Amps

General Characteristics

Temperature Range — -40°C to +85°C

Operating Cycles (Life) at Rated Resistive Load, Min. — 50,000 cycles

Operating Cycles (Life) Mechanical, Min. — 100,000 cycles

Dielectric Strength —
All Circuits to Ground — 1,500 Vrms
Circuit to Circuit — 1,500 Vrms
Coil to Ground and Aux. Contacts — 1,000 Vrms

Insulation Resistance, Initial — 100 megohm min.

Altitude Max. — 50,000 ft.

Weight, Max. — .31-.41 lbs

Coil Characteristics

Duty Cycle —
AC (Type A, See diagram below), Economized (Type B, See diagram below), Economized with suppression (Type C, See diagram below), Continuous or Intermittent (Type D & F, See diagram below), Continuous or Intermittent with suppression (Type E & G, See diagram below)

Operating Voltage, Nom. — 28 Vdc

Pickup Voltage @ 20°C, Max. — 18 Vdc

Coil Type

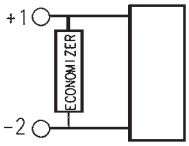

A — Electronic Economized with Suppression

Circuit Configurations
(Consult factory for other available circuit configurations)

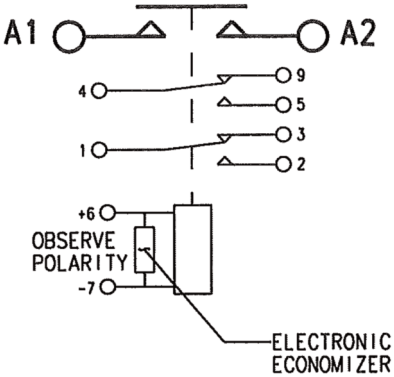

Circuit Configuration 1

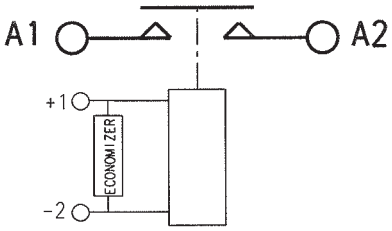

Circuit Configuration 2

HARTMAN Part Number	Construction Type	Mounting Style	Coil Type	Circuit Config.	TE Part Number
K200A1C	Gasket	B	A	2	5-1616970-9
K200B3C02	Gasket	A	A	1	4-1616968-7
K200B1C	Gasket	C	A	2	6-1616970-0
K200A3C	Gasket	E	A	1	8-1616977-1

For factory-direct application assistance, phone 419-521-9500 or fax 419-526-2749.

Catalog 5-1773450-5
Revised 3-13

www.te.com

Dimensions are shown for reference purposes only. Specifications subject to change.

Dimensions are in millimeters unless otherwise specified.

USA: +1 800 522 6752
Asia Pacific: +86 0 400 820 6015
UK: +44 800 267 666

For additional support numbers please visit www.te.com

K Series, Rated up to 200 Amps, 28 Vdc (Continued)

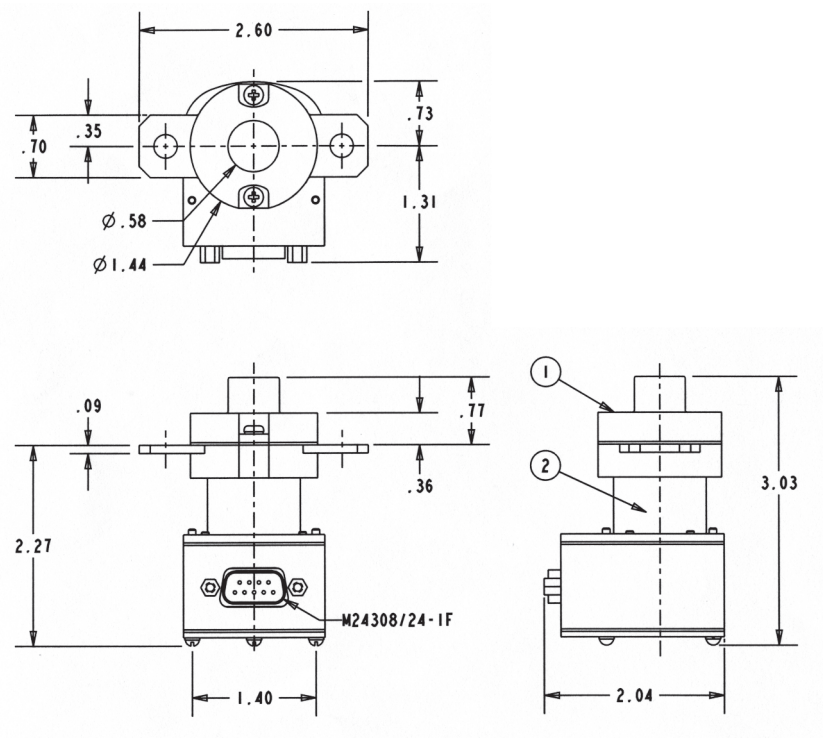

Mounting Style A

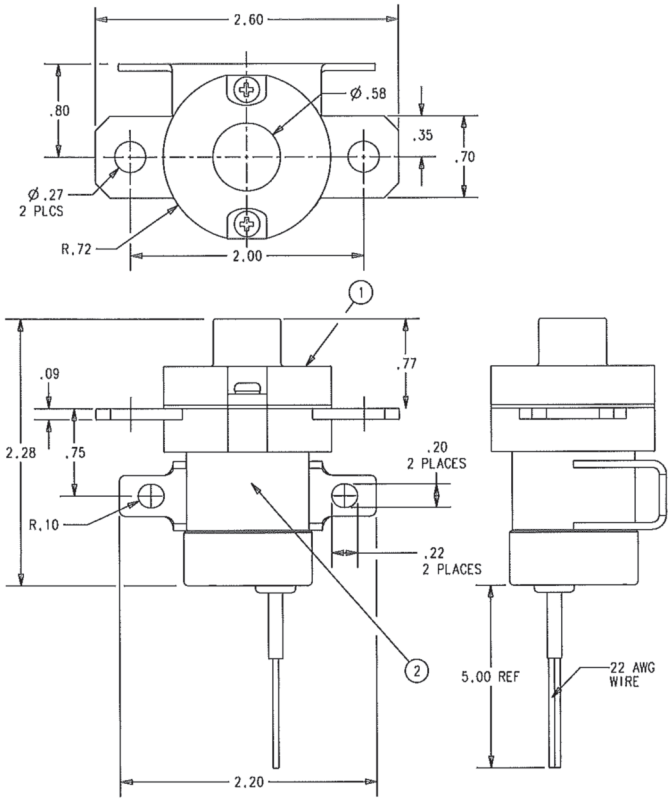

Mounting Style B

For factory-direct application assistance, phone 419-521-9500 or fax 419-526-2749.

Dimensions are shown for reference purposes only. Specifications subject to change.

Dimensions are in millimeters unless otherwise specified.

USA: +1 800 522 6752
Asia Pacific: +86 0 400 820 6015
UK: +44 800 267 666

For additional support numbers please visit www.te.com

K Series, Rated up to 200 Amps, 28 Vdc (Continued)

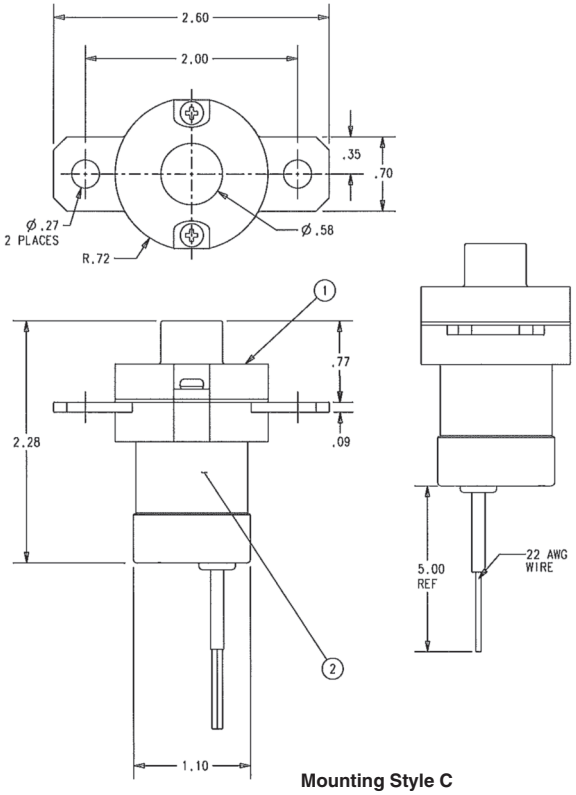

Mounting Style C

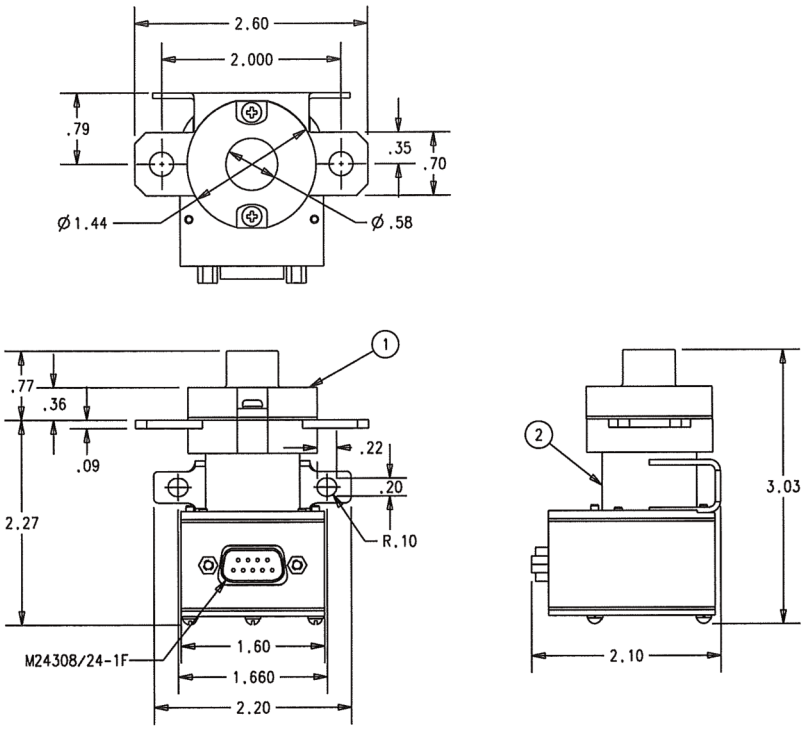

Mounting Style E

For factory-direct application assistance, phone 419-521-9500 or fax 419-526-2749.

K Series, Rated up to 400 Amps, 28 Vdc

Performance Data

Electrical Characteristics

Contact Arrangement — SPST NO, Double Break

Rated Operating Voltage — 28 Vdc

Resistive Rating — 400 Amps

Overload Rating — 3,200 Amps

Rupture Rating — 4,000 Amps

General Characteristics

Temperature Range — -40°C to +85°C

Operating Cycles (Life) at Rated Resistive Load, Min. — 50,000 cycles

Operating Cycles (Life) Mechanical, Min. — 100,000 cycles

Dielectric Strength —
All Circuits to Ground — 1,250 Vrms
Circuit to Circuit — 1,250 Vrms
Coil to Ground and Aux. Contacts — 1,000 Vrms

Altitude, Max. — 50,000 ft.

Weight, Max. — .59 -.75 lbs

Coil Characteristics

Duty Cycle — Economized with suppression (Type A, See diagram below), Continuous (Type B, See diagram below), Intermittent (Type C, See diagram below)

Operating Voltage, Nom. — 28 Vdc

Pickup Voltage @ 250°C, Max. — 18 Vdc - Economized and continuous duty coil

12 Vdc - Intermittent duty coil

Dropout Voltage, Max. —

7 Vdc - Economized and continuous duty

5 Vdc - Intermittent duty coil

Product Facts

- **SPST NO, Double break**
- **Buss bar or chassis mount design**
- **Gasket sealed**
- **Auxiliary contacts available**
- **Meets many requirements of MIL-PRF-6106**

Coil Type

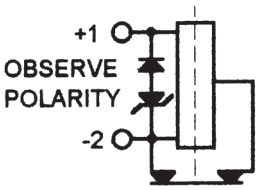

A — Economized with Suppression

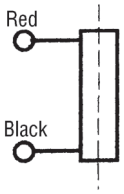

B — Continuous

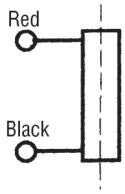

C— Intermittent

HARTMAN Part Number	Construction Type	Mounting Style	Coil Type	Circuit Config.	TE Part Number
K4001A3C	Gasket Sealed	F	A	4	6-1616968-5
K4001B3C	Gasket Sealed	A	A	4	4-1616959-0
K400A1D	Gasket Sealed	B	C	1	—
K400A1F	Gasket Sealed	B	B	1	6-1616945-7
K400A4C1	Gasket Sealed	K	A	2	6-1616965-1
K400B1D	Gasket Sealed	E	C	1	8-1616968-4
K400B1F	Gasket Sealed	E	B	1	2-1616921-3
K400B3C05	Gasket Sealed	C	A	6	7-1616941-3
K400B712C	Gasket Sealed	D	A	7	5-1616946-6
K4001B7C	Gasket Sealed	A	A	5	4-1616959-8
K4001A7C	Gasket Sealed	F	A	5	6-1616970-7
K4001B2C	Gasket Sealed	A	A	3	6-1616970-8
K4001A2C	Gasket Sealed	F	A	3	6-1616970-6
K400A1F1	Gasket Sealed	G	B	1	4-1616964-5

For factory-direct application assistance, phone 419-521-9500 or fax 419-526-2749.

Catalog 5-1773450-5
Revised 3-13

www.te.com

Dimensions are shown for reference purposes only. Specifications subject to change.

Dimensions are in millimeters unless otherwise specified.

USA: +1 800 522 6752
Asia Pacific: +86 0 400 820 6015
UK: +44 800 267 666

For additional support numbers please visit www.te.com

K Series, Rated up to 400 Amps, 28 Vdc (Continued)

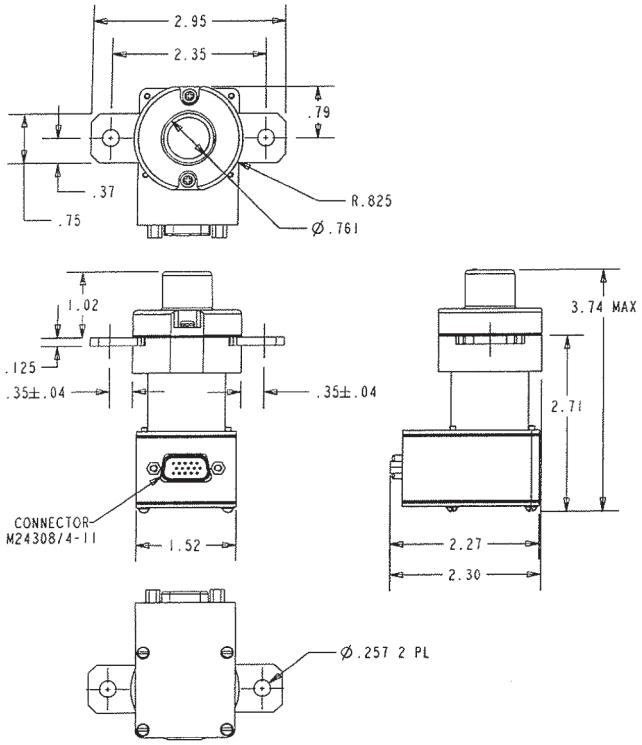

Mounting Style A

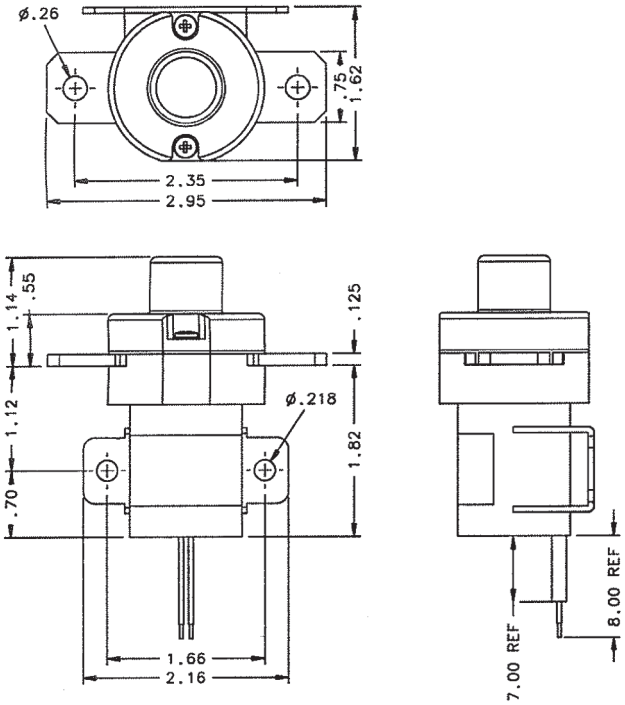

Mounting Style B

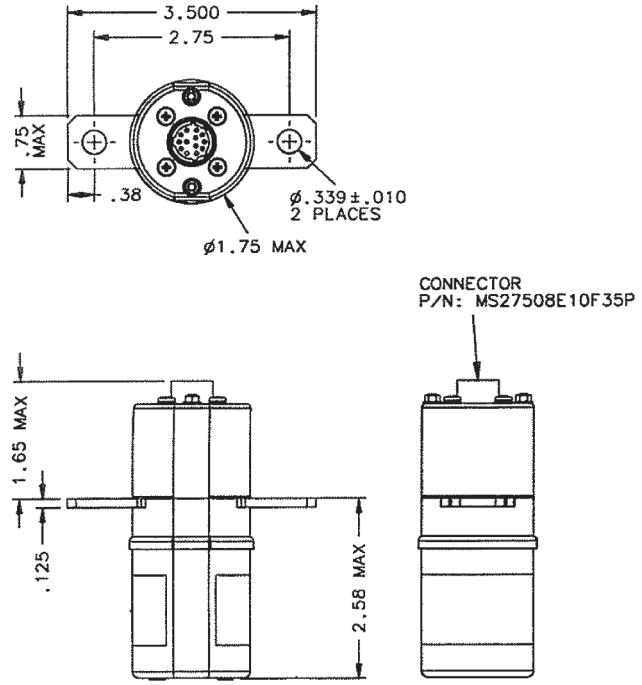

Mounting Style C

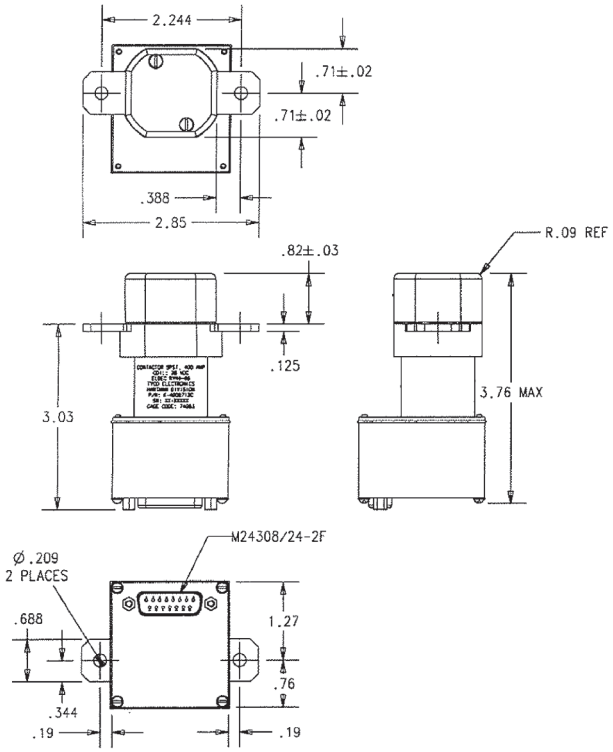

Mounting Style D

For factory-direct application assistance, phone 419-521-9500 or fax 419-526-2749.

K Series, Rated up to 400 Amps, 28 Vdc (Continued)

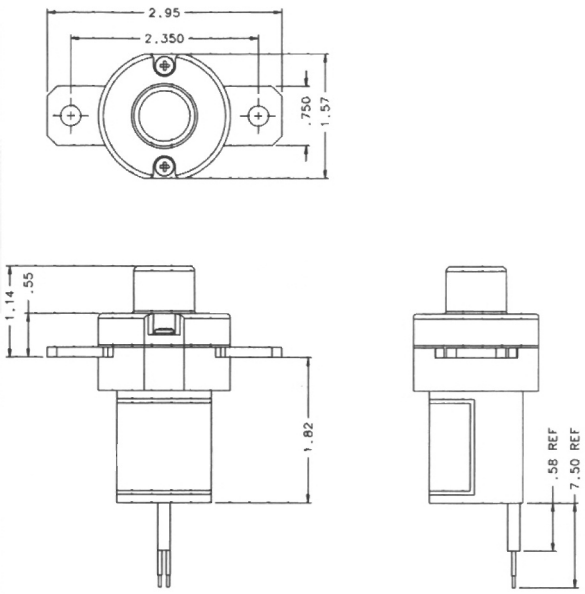

Mounting Style E

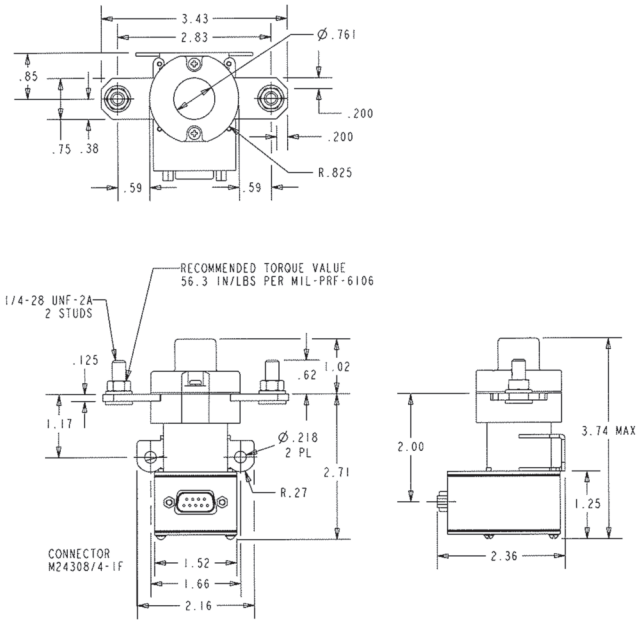

Mounting Style F

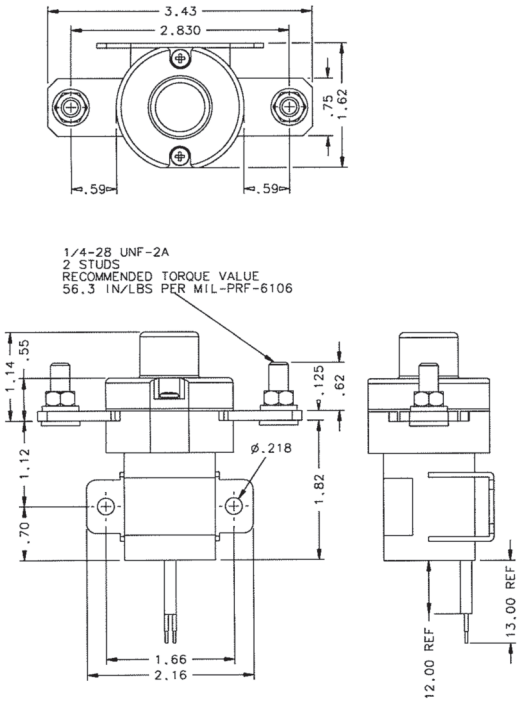

Mounting Style G

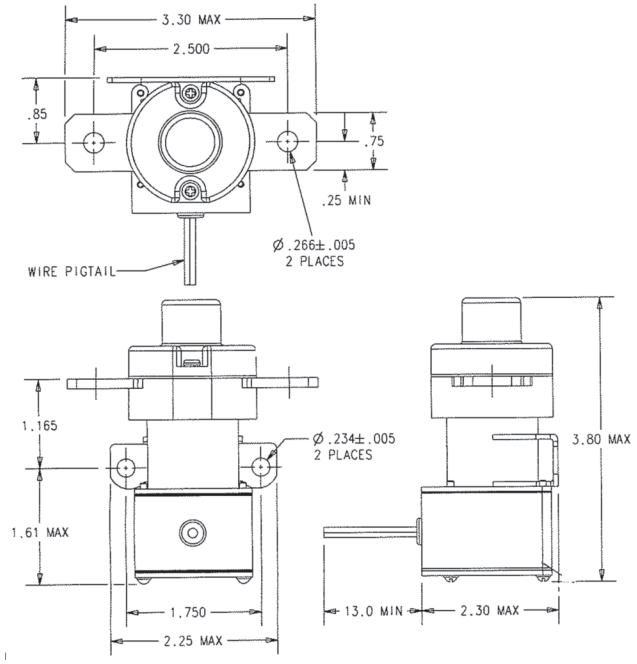

Mounting Style K

For factory-direct application assistance, phone 419-521-9500 or fax 419-526-2749.

K Series, Rated up to 400 Amps, 28 Vdc (Continued)

Circuit Configurations (Consult factory for other available circuit configurations)

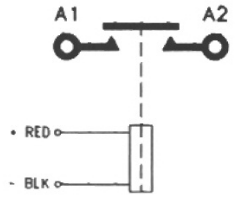

Circuit Configuration 1

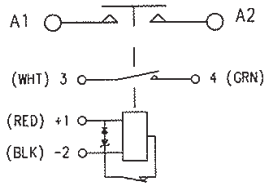

Circuit Configuration 2

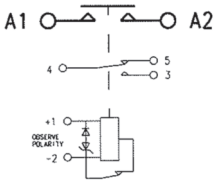

Circuit Configuration 3

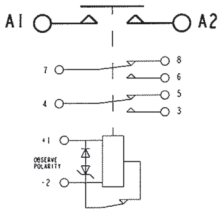

Circuit Configuration 4

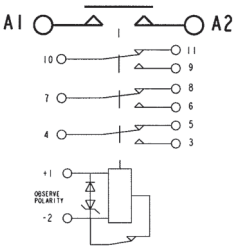

Circuit Configuration 5

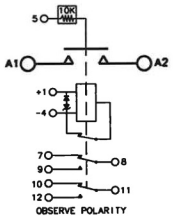

Circuit Configuration 6

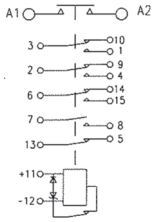

Circuit Configuration 7

For factory-direct application assistance, phone 419-521-9500 or fax 419-526-2749.

Catalog 5-1773450-5
Revised 3-13

www.te.com

Dimensions are shown for reference purposes only. Specifications subject to change.

Dimensions are in millimeters unless otherwise specified.

USA: +1 800 522 6752
Asia Pacific: +86 0 400 820 6015
UK: +44 800 267 666

For additional support numbers please visit www.te.com

K Series, Rated up to 500 Amps, 28 Vdc

Product Facts

- **SPST NO, Double break**
- **Buss bar or chassis mount designs**
- **Gasket sealed**
- **Multiple auxiliary contact choices**
- **Meets many requirements of MIL-PRF-6106**

Performance Data

Electrical Characteristics

Main Contacts —

Contact Arrangement — SPST NO, Double Break

Rated Operating Voltage — 28 Vdc

Resistive Rating — 500 Amps

Rupture Rating — 5,000 Amps

Auxiliary Contacts —

Aux. Contact Arrangement — 3 SPDT

Rated Operating Voltage — 28 Vdc

Resistive Rating — 5 Amps

Lamp Rating — 1 Amps

Low Level — 1 mA @ 28 Vdc

General Characteristics

Temperature Range — -55°C to +85°C

Operating Cycles (Life) at Rated Resistive Load — 50,000 cycles

Operating Cycles (Life) Mechanical — 100,000 cycles

Altitude — 50,000 ft.

Weight, Max. — .88 lbs

Operate Time @ 18 Vdc & 85°C, Max. — 45 msec

Dropout Time @ 32 Vdc, Max. — 25 msec

Coil Characteristics

Duty Cycle — Continuous, economizing

Operating Voltage, Nom. — 28 Vdc

Pickup Voltage, Max. — 18 Vdc

Dropout Voltage — 1 to 7 Vdc

Inrush — 5 Amps

Hold @ 32 Vdc & -55°C — 0.272 mA max.

Coil Type

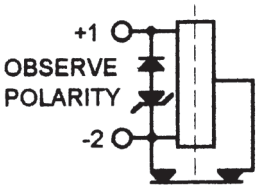

A — Economized with Suppression

For factory-direct application assistance, phone 419-521-9500 or fax 419-526-2749.

Catalog 5-1773450-5
Revised 3-13

www.te.com

Dimensions are shown for reference purposes only. Specifications subject to change.

Dimensions are in millimeters unless otherwise specified.

USA: +1 800 522 6752
Asia Pacific: +86 0 400 820 6015
UK: +44 800 267 666

For additional support numbers please visit www.te.com

K Series, Rated up to 500 Amps, 28 Vdc (Continued)

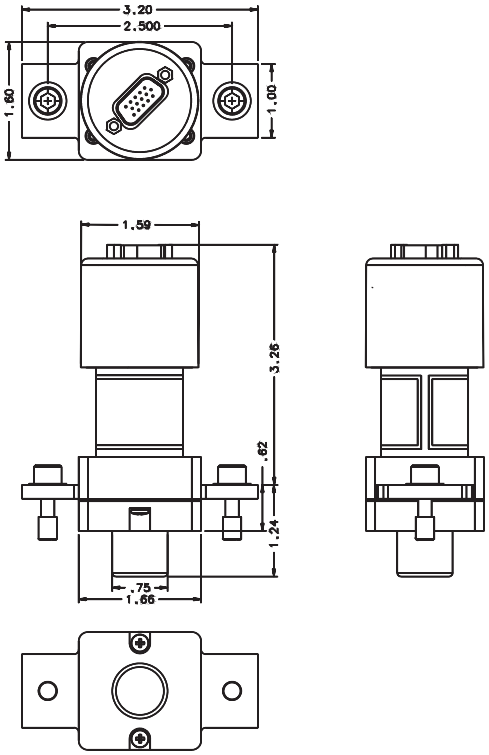

Mounting Style A

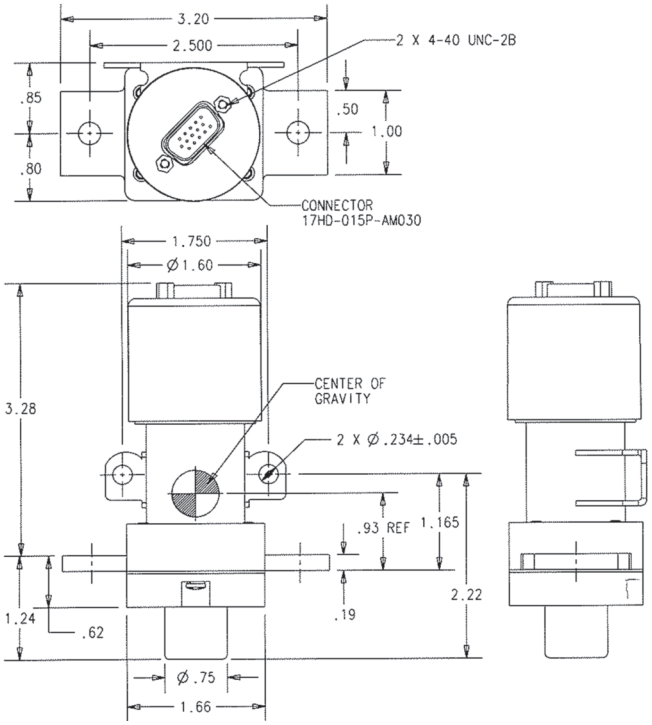

Mounting Style B

For factory-direct application assistance, phone 419-521-9500 or fax 419-526-2749.

Dimensions are shown for reference purposes only. Specifications subject to change.

Dimensions are in millimeters unless otherwise specified.

USA: +1 800 522 6752
Asia Pacific: +86 0 400 820 6015
UK: +44 800 267 666

For additional support numbers please visit www.te.com

K Series, Rated up to 500 Amps, 28 Vdc (Continued)

Circuit Configurations (Consult factory for other available circuit configurations)

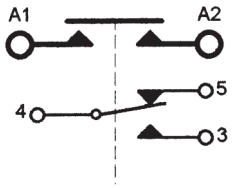

Circuit Configuration 1

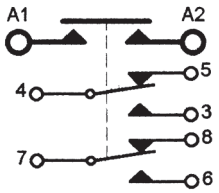

Circuit Configuration 2

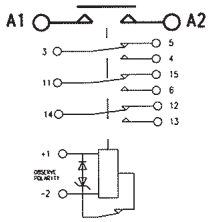

Circuit Configuration 3

HARTMAN Part Number	Construction Type	Mounting Style	Coil Type	Circuit Config.	TE Part Number
K500B2C	Gasket Sealed	A	A	1	7-1616927-0
K500A2C	Gasket Sealed	B	A	1	4-1616951-4
K500B3C	Gasket Sealed	A	A	2	7-1616970-0
K500A3C	Gasket Sealed	B	A	2	6-1616970-9
K500B7C01	Gasket Sealed	A	A	3	9-1616965-0
K500A7C01	Gasket Sealed	B	A	3	2-1616970-8

K Series, Rated up to 500 Amps, 28 Vdc — Time Delay

Product Facts

- **SPST NO, Double break**
- **Delay on operator or release**
- **Chassis Mount (bus bar mount available)**
- **Gasket sealed**
- **Meets many requirements of MIL-PRF-6106**

Performance Data

Electrical Characteristics

Contact Arrangement — SPST NO, Double Break

Rated Operating Voltage — 28 VDC

Resistive Rating — 500A

Rupture Rating — 5000A

Delay on operate or release — See note 1

General Characteristics

Temperature Range — -55°C to +85°C

Minimum Electrical Cycles — 50,000

Minimum Mechanical Cycles — 100,000 @ 125A

Dielectric Strength — 1000 Vrms

Altitude — 50,000 ft

Weight, Max. — 1.0 lbs

Duty Cycle — Intermittent or Continuous (See note 2)

Operating Voltage Range — 21 - 32 Vdc

Drop Out Voltage — 1 to 7 Vdc

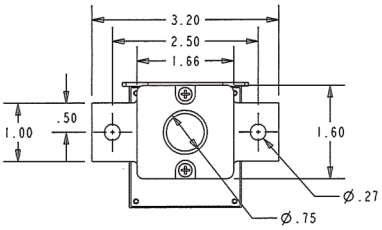

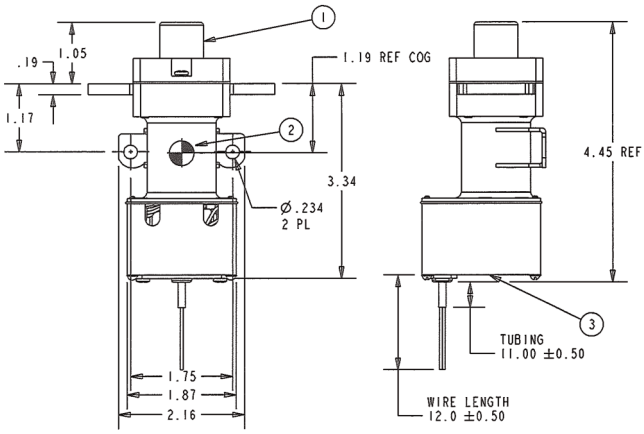

NOTES

1. Delay can be tailored to meet customer need. Consult Factory.
2. Intermittent duty coil is recommended for starting applications where significant control voltage sags are possible. Consult factory to specify correct coil duty for your application.

For factory-direct application assistance, phone 419-521-9500 or fax 419-526-2749.

Dimensions are shown for reference purposes only. Specifications subject to change.

Dimensions are in millimeters unless otherwise specified.

USA: +1 800 522 6752
Asia Pacific: +86 0 400 820 6015
UK: +44 800 267 666

For additional support numbers please visit www.te.com

K-1000 Series, Rated up to 1,000 Amps, 28 Vdc

Product Facts

- **SPST NO, Double break**
- **Gasket sealed**
- **Meets many requirements of MIL-PRF-6106**

Performance Data

Electrical Characteristics

Contact Arrangement — SPST NO, Double Break

Rated Operating Voltage — 28 Vdc

Resistive Rating — 1,000 Amps

General Characteristics

Temperature Range — -55°C to +71°C

Operating Cycles (Life) at Rated Resistive Load — 50,000 cycles

Operating Cycles (Life) Mechanical — 100,000 cycles

Weight, Max. — 2.75 lbs

Coil Characteristics

Duty Cycle — Continuous, economizing

Operating Voltage, Nom. — 28 Vdc

Pickup Voltage, Max. @25°C — 18 Vdc

Dropout Voltage — 1 to 8 Vdc

Current, Inrush, Max. @ 30 Vdc — 7.0 Amps

Current, Hold, Max. @ 30 Vdc — 1.0 Amps

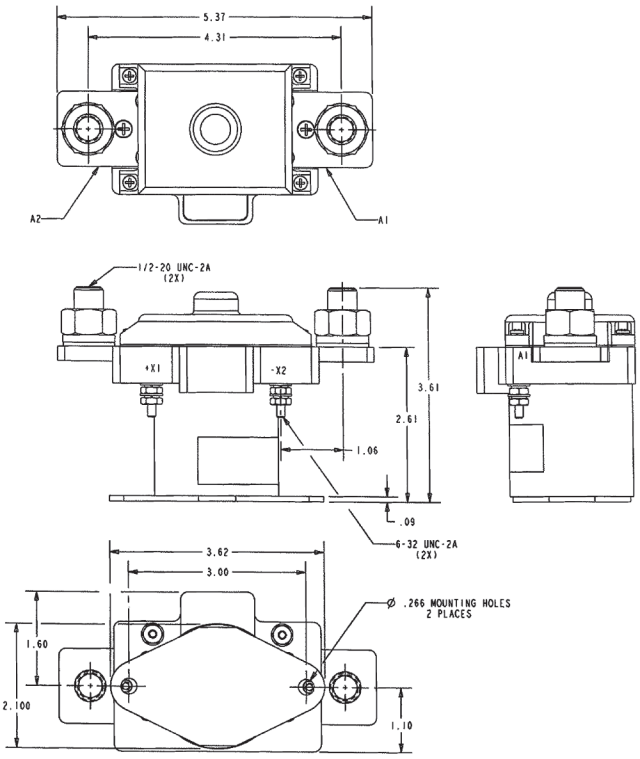

Mounting Style A

Circuit Configurations (Consult factory for other available circuit configurations)

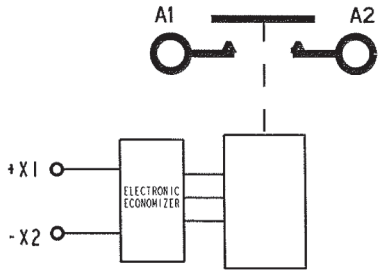

Circuit Configuration 1

HARTMAN Part Number	Construction Type	Mounting Style	Coil Type	Circuit Config.	TE Part Number
K-1000A1F03	Gasket Sealed	A	Continuous	1	4-1616966-1

For factory-direct application assistance, phone 419-521-9500 or fax 419-526-2749.

Catalog 5-1773450-5
Revised 3-13

www.te.com

Dimensions are shown for reference purposes only. Specifications subject to change.

Dimensions are in millimeters unless otherwise specified.

USA: +1 800 522 6752
Asia Pacific: +86 0 400 820 6015
UK: +44 800 267 666

For additional support numbers please visit www.te.com

Cross Reference

Main Current Rating	AC/DC	Rating	Main Contact Config.	Operating Mode	Aux. Contact Config.	Coil Voltage	Seal Type	Duty Cycle	Coil Trans. Voltage (VDC)	Hartman Part No.	TE Part No.
200	DC	28	SPST NO	Side Stable	2PDT	28	Gasket	Cont. Econ.	42	K200A1C	5-1616970-9
		28	SPST NO	Side Stable	2PDT	28	Gasket	Cont. Econ.	42	K200B3C02	4-1616968-7
		28	SPST NO	Side Stable	2PDT	28	Gasket	Cont. Econ.	42	K200B1C	6-1616970-0
		28	SPST NO	Side Stable	2PDT	28	Gasket	Cont. Econ.	42	K200A3C	8-1616977-1
400	DC	28	SPST NO	Side Stable	2PDT	28	Gasket	Cont. Econ.	42	K4001A3C	6-1616968-5
		28	SPST NO	Side Stable	2PDT	28	Gasket	Cont. Econ.	42	K4001B3C	4-1616959-0
		28	SPST NO	Side Stable	None	28	Gasket	Intermittent	–	K400A1D	—
		28	SPST NO	Side Stable	None	28	Gasket	Continuous	–	K400A1F	6-1616945-7
		28	SPST NO	Side Stable	1PST NO	28	Gasket	Cont. Econ.	42	K400A4C1	6-1616965-1
		28	SPST NO	Side Stable	None	28	Gasket	Intermittent	–	K400B1D	8-1616968-4
		28	SPST NO	Side Stable	None	28	Gasket	Continuous	–	K400B1F	2-1616921-3
		28	SPST NO	Side Stable	2PDT	28	Gasket	Cont. Econ.	42	K400B3C05	7-1616941-3
		28	SPST	Side Stable	3PDT	28	Gasket	Cont. Econ.	42	K4001B7C	4-1616959-8
		28	SPST	Side Stable	3PDT	28	Gasket	Cont. Econ.	42	K4001A7C	6-1616970-7
		28	SPST	Side Stable	1PDT	28	Gasket	Cont. Econ.	42	K4001B2C	6-1616970-8
		28	SPST	Side Stable	1PDT	28	Gasket	Cont. Econ.	42	K4001A2C	6-1616970-6
		28	SPST	Side Stable	None	28	Gasket	Continuous	–	K400A1F1	4-1616964-5
		28	SPST NO	Side Stable	3PDT, 1PST NO, 1PST NC	28	Gasket	Cont. Econ.	42	K400B712C	5-1616946-6
500	DC	28	SPST NO	Side Stable	1PDT	28	Gasket	Cont. Econ.	42	K500B2C	7-1616927-0
		28	SPST NO	Side Stable	2PDT	28	Gasket	Cont. Econ.	42	K500B3C	7-1616970-0
		28	SPST NO	Side Stable	2PDT	28	Gasket	Cont. Econ.	42	K500A3C	6-1616970-9
		28	SPST NO	Side Stable	1PDT	28	Gasket	Cont. Econ.	42	K500A2C	4-1616951-4
		28	SPST NO	Side Stable	3PDT	28	Gasket	Cont. Econ.	42	K500A7C01	2-1616970-8
		28	SPST NO	Side Stable	3PDT	28	Gasket	Cont. Econ.	42	K500B7C01	9-1616965-0
1000	DC	28	SPST NO	Side Stable	N/A	28	Gasket	Continuous	–	K1000A1F03	4-1616966-1

For factory-direct application assistance, phone 419-521-9500 or fax 419-526-2749.

Dimensions are shown for reference purposes only. Specifications subject to change.

Dimensions are in millimeters unless otherwise specified.

USA: +1 800 522 6752
Asia Pacific: +86 0 400 820 6015
UK: +44 800 267 666

For additional support numbers please visit www.te.com

DH-14 and DH-21 Series, Rated up to 25 Amps, 28 Vdc

Product Facts

- **SPDT, 1 NO, 1 NC, Double Break**
- **Hermetically Sealed**
- **DH21 Series has magnetically latched contacts**
- **Meets many requirements of MIL-PRF-6106**

Performance Data

Electrical Characteristics

Contact Arrangement — SPDT, 1 NO, 1 NC, Double Break

Rated Operating Voltage — 28 Vdc

Resistive Rating — 25 Amps

Inductive Rating — 25 Amps

Motor Rating — 15 Amps

General Characteristics

Temperature Range — -55°C to +71°C

Operating Cycles (Life) at Rated Resistive Load, Min. — 50,000 cycles

Operating Cycles (Life) Mechanical, Min. — 100,000 cycles

Dielectric Strength —
All Circuits to Ground — 1,250 Vrms
Circuit to Circuit — 1,250 Vrms
Coil to Ground and Aux. Contacts — 1,000 Vrms

Altitude Max. — 80,000 ft.

Weight — .39 lbs

Coil Characteristics

Duty Cycle — Continuous (Type A, See diagram below), Continuous with suppression (Type B, See diagram below) or Intermittent (Type C)

Operating Voltage, Nom. — 28 Vdc

Pickup Voltage @ 25°C, Max. — 18 Vdc

Dropout Voltage @ 25°C, Max. — 1.0 to 7 Vdc

Coil Type

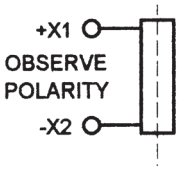

A — Continuous

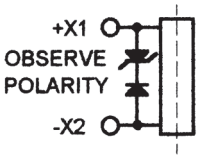

B — Continuous with Suppression

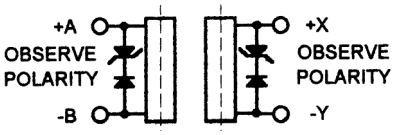

C — Intermittent

For factory-direct application assistance, phone 419-521-9500 or fax 419-526-2749.

Catalog 5-1773450-5
Revised 3-13

www.te.com

Dimensions are shown for reference purposes only. Specifications subject to change.

Dimensions are in millimeters unless otherwise specified.

USA: +1 800 522 6752
Asia Pacific: +86 0 400 820 6015
UK: +44 800 267 666

For additional support numbers please visit www.te.com

DH-14 and DH-21 Series, Rated up to 25 Amps, 28 Vdc (Continued)

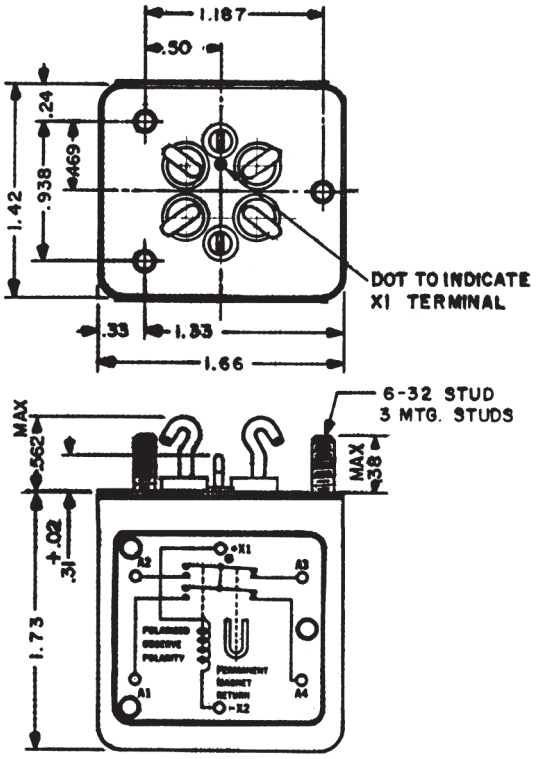

Mounting Style A

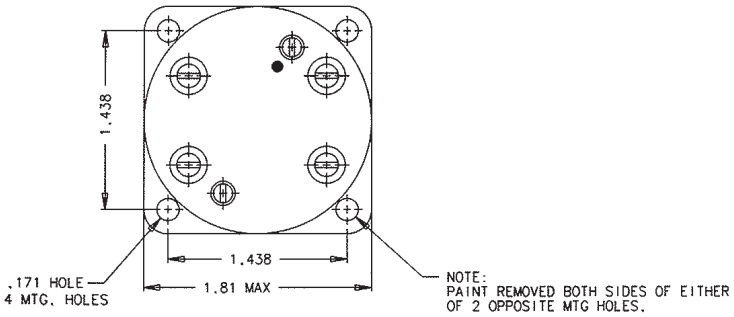

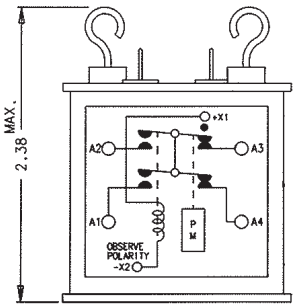

Mounting Style B

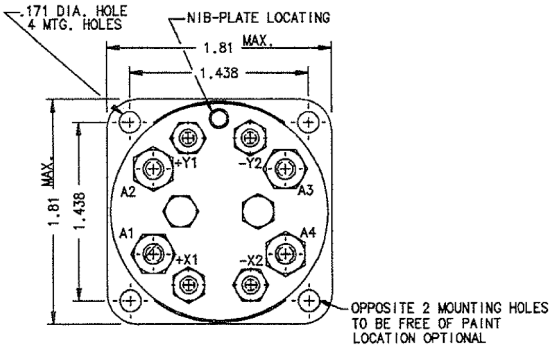

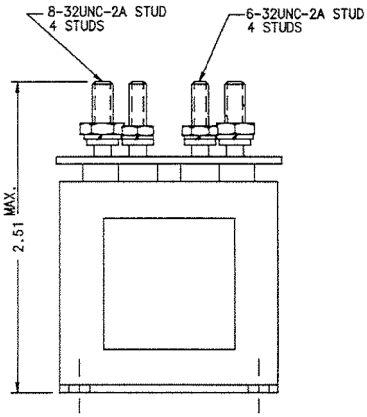

Mounting Style C

For factory-direct application assistance, phone 419-521-9500 or fax 419-526-2749.

Dimensions are shown for reference purposes only. Specifications subject to change.

Dimensions are in millimeters unless otherwise specified.

USA: +1 800 522 6752
Asia Pacific: +86 0 400 820 6015
UK: +44 800 267 666

For additional support numbers please visit www.te.com

DH-14 and DH-21 Series, Rated up to 25 Amps, 28 Vdc (Continued)

Circuit Configurations (Consult factory for other available circuit configurations)

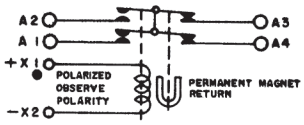

Circuit Configuration 1

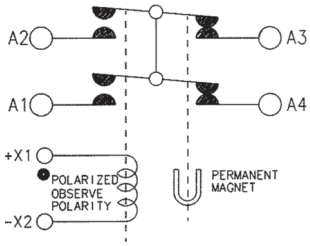

Circuit Configuration 2

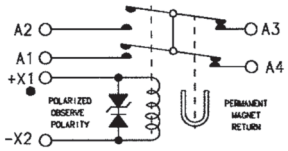

Circuit Configuration 3

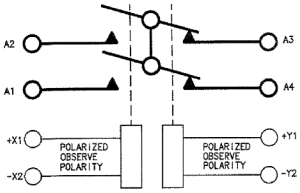

Circuit Configuration 4

HARTMAN Part Number	Construction Type	Mounting Style	Coil Type	Circuit Config.	TE Part Number
DH-14A	Hermetically Sealed	A	A	1	1616089-1
DH-14AL	Hermetically Sealed	B	A	2	1616089-2
DH-14AT	Hermetically Sealed	A	B	3	1616089-3
DH-21N*	Hermetically Sealed	C	C	4	1616026-2

*DH21N is a magnetically latched unit. Contacts will remain in position until the opposing coil is pulsed.

For factory-direct application assistance, phone 419-521-9500 or fax 419-526-2749.

Catalog 5-1773450-5
Revised 3-13

www.te.com

Dimensions are shown for reference purposes only. Specifications subject to change.

Dimensions are in millimeters unless otherwise specified.

USA: +1 800 522 6752
Asia Pacific: +86 0 400 820 6015
UK: +44 800 267 666

For additional support numbers please visit www.te.com

D-7, DH-7 and DH-18 Series, Rated up to 50 Amps, 28 Vdc

Product Facts

- **2 SPST, 1 NO, 1 NC**
- **DH-18 Series are center-off double-throw units**
- **Gasket Sealed or Hermetically Sealed**
- **Auxiliary contacts available**
- **Meets many requirements of MIL-R-6106**

Performance Data

Electrical Characteristics

Contact Arrangement — 2 SPST, 1 NO, 1 NC, Electrically Latched

Rated Operating Voltage — 28 Vdc

Resistive Rating — 50 Amps

Inductive Rating — 25 Amps

General Characteristics

Temperature Range — -55°C to +71°C

Operating Cycles (Life) at Rated Resistive Load, Min. — 50,000 cycles

Operating Cycles (Life) Mechanical, Min. — 100,000 cycles

Dielectric Strength —
All Circuits to Ground — 1,500 Vrms
Circuit to Circuit — 1,500 Vrms
Coil to Ground and Aux. Contacts — 1,000 Vrms

Altitude Max. — 50,000 ft.

Weight — .72 to .94 lbs

Coil Characteristics

Duty Cycle — Continuous (Type A, See diagram below) or Continuous with suppression (Type B, See diagram below) or Continuous (Type C)

Operating Voltage, Nom. — 28 Vdc

Pickup Voltage @ 25°C, Max. — 18 Vdc

Dropout Voltage @ 25°C, Max. — 1.5 to 7 Vdc

Coil Current @ 25°C, Max. — 0.28 Amp

Coil Type

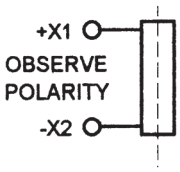

A — Continuous

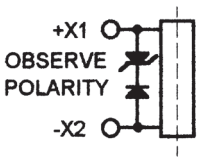

B — Continuous with Suppression

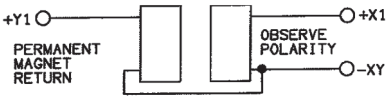

C — Continuous

For factory-direct application assistance, phone 419-521-9500 or fax 419-526-2749.

Dimensions are shown for reference purposes only. Specifications subject to change.

Dimensions are in millimeters unless otherwise specified.

USA: +1 800 522 6752
Asia Pacific: +86 0 400 820 6015
UK: +44 800 267 666

For additional support numbers please visit www.te.com

D-7, DH-7 and DH-18 Series, Rated up to 50 Amps, 28 Vdc (Continued)

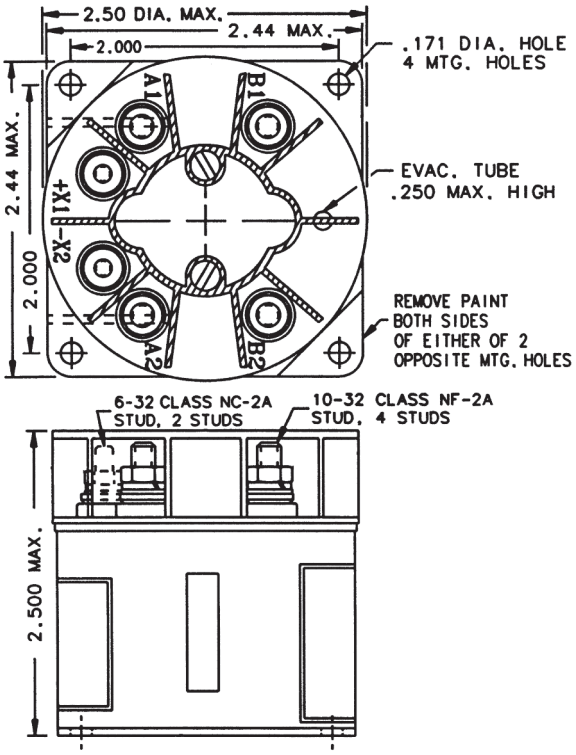

Mounting Style A

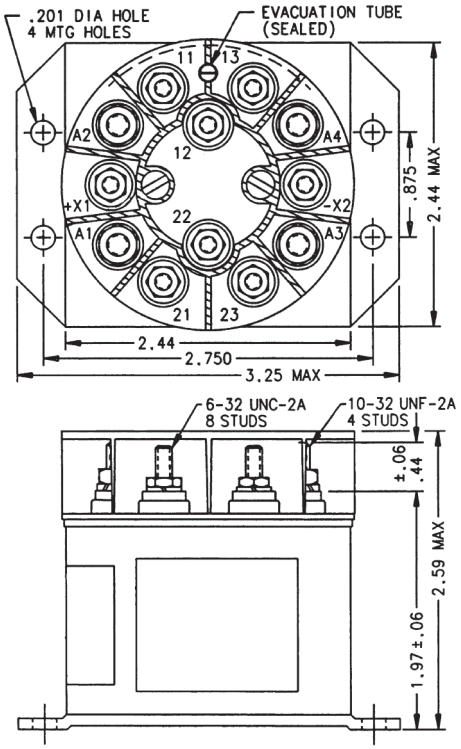

Mounting Style B

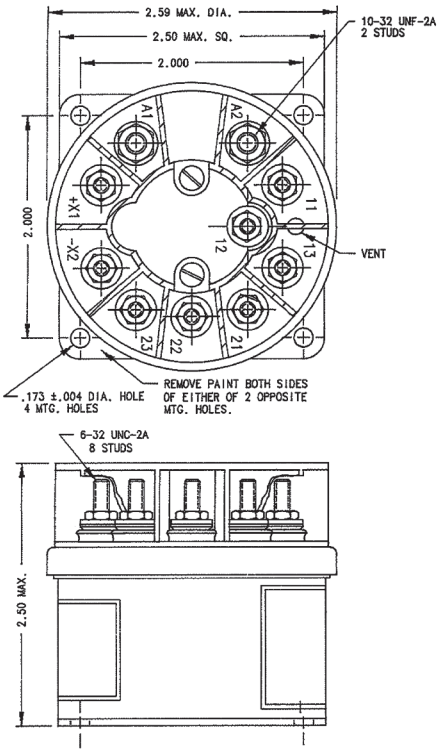

Mounting Style C

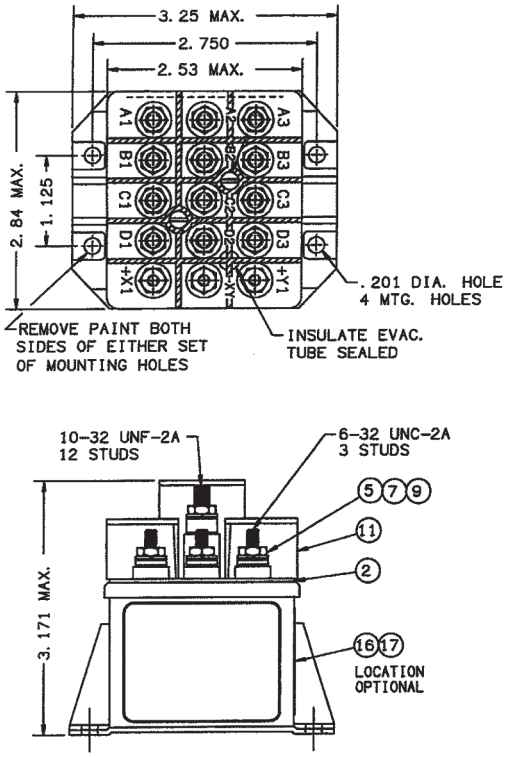

Mounting Style D

For factory-direct application assistance, phone 419-521-9500 or fax 419-526-2749.

Dimensions are shown for reference purposes only. Specifications subject to change.

Dimensions are in millimeters unless otherwise specified.

USA: +1 800 522 6752
Asia Pacific: +86 0 400 820 6015
UK: +44 800 267 666

For additional support numbers please visit www.te.com

D-7, DH-7 and DH-18 Series, Rated up to 50 Amps, 28 Vdc (Continued)

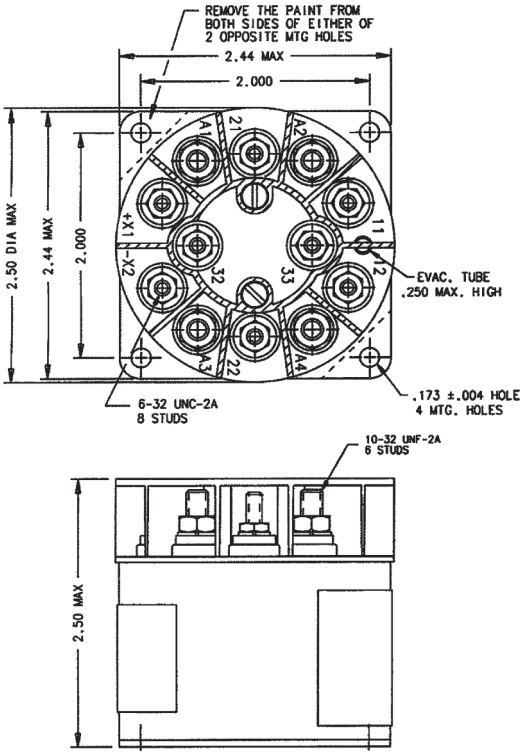

Mounting Style E

For factory-direct application assistance, phone 419-521-9500 or fax 419-526-2749.

Dimensions are shown for reference purposes only. Specifications subject to change.

Dimensions are in millimeters unless otherwise specified.

USA: +1 800 522 6752
Asia Pacific: +86 0 400 820 6015
UK: +44 800 267 666

For additional support numbers please visit www.te.com

D-7, DH-7 and DH-18 Series, Rated up to 50 Amps, 28 Vdc (Continued)

Circuit Configurations (Consult factory for other available circuit configurations)

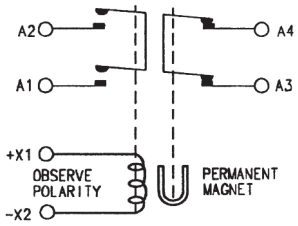

Circuit Configuration 1

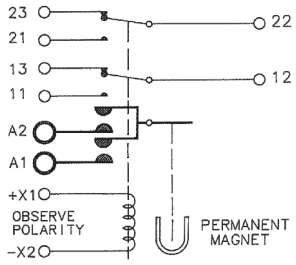

Circuit Configuration 2

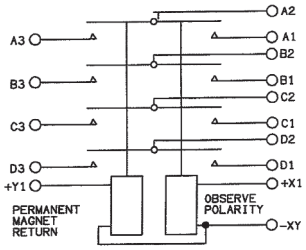

Circuit Configuration 3

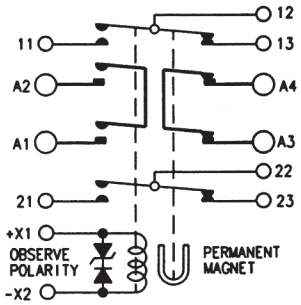

Circuit Configuration 4

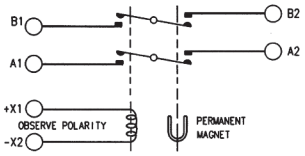

Circuit Configuration 5

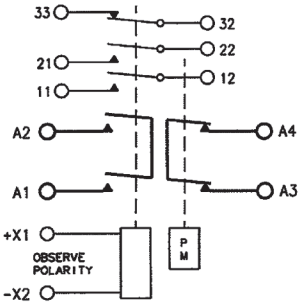

Circuit Configuration 6

HARTMAN Part Number	Construction Type	Mounting Style	Coil Type	Circuit Config.	TE Part Number
D-7AC	Gasket Sealed	A	A	1	1616088-1
D-7LHB	Gasket Sealed	C	A	2	1616064-1
DH-18DA*	Hermetically Sealed	D	C	3	1616050-2
DH-7ATK	Hermetically Sealed	B	B	4	1616089-7
DH-7MN	Hermetically Sealed	A	A	5	1616103-2
DH-7TB	Hermetically Sealed	E	A	6	1-1616089-3

*DH-18DA is a 4PDT center-off unit. Contacts will return to the center position when coil power is removed.

For factory-direct application assistance, phone 419-521-9500 or fax 419-526-2749.

Catalog 5-1773450-5
Revised 3-13

www.te.com

Dimensions are shown for reference purposes only. Specifications subject to change.

Dimensions are in millimeters unless otherwise specified.

USA: +1 800 522 6752
Asia Pacific: +86 0 400 820 6015
UK: +44 800 267 666

For additional support numbers please visit www.te.com

A-1077 Series, Rated up to 100 Amps, 28 Vdc

Product Facts

- **SPST NO, Double Break or SPDT Double Break**
- **Gasket Sealed**
- **Auxiliary contacts available**
- **Meets many requirements of MIL-PRF-6106**

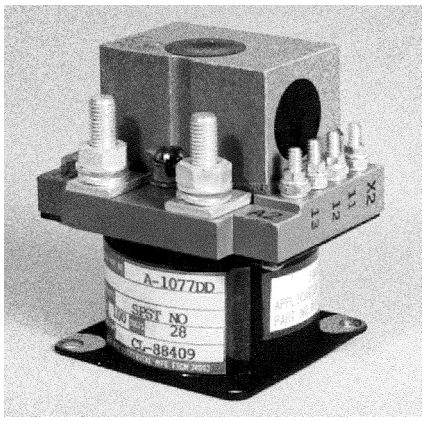

Performance Data

Electrical Characteristics

Main Contact Configuration —
A-1077DD — SPST NO
A-1077S — SPDT

Rated Operating Voltage —
28 Vdc

Main Contact Rating —

Resistive Rating — 100 Amps

Inductive Rating — 100 Amps

Motor Rating — 100 Amps

Interrupt Rating — 1,200 Amps

Auxiliary Contacts —

Resistive Rating —
5 Amp, 28 VAC/115 VAC

General Characteristics

Temperature Range —
-55°C to +71°C

Operating Cycles (Life) at Rated Resistive Load, Min. —
50,000 cycles

Operating Cycles (Life) Mechanical, Min. — 100,000 cycles

Dielectric Strength —
All Circuits to Ground — 1,250 Vrms
Circuit to Circuit — 1,250 Vrms
Coil to Ground and Aux. Contacts —
1,000 Vrms

Altitude, Max. — 50,000 ft.

Weight, Max. — 1.5 to 2 lbs

Coil Characteristics

Coil Characteristics

Duty Cycle — Continuous

Operating Voltage, Max. — 32 Vdc

Operating Voltage, Min. — 24 Vdc

Pickup Voltage @ 25°C, Max. —
16.5 Vdc

Dropout Voltage — 1 to 7 Vdc

For factory-direct application assistance, phone 419-521-9500 or fax 419-526-2749.

Catalog 5-1773450-5
Revised 3-13

www.te.com

Dimensions are shown for reference purposes only. Specifications subject to change.

Dimensions are in millimeters unless otherwise specified.

USA: +1 800 522 6752
Asia Pacific: +86 0 400 820 6015
UK: +44 800 267 666

For additional support numbers please visit www.te.com

A-1077 Series, Rated up to 100 Amps, 28 Vdc (Continued)

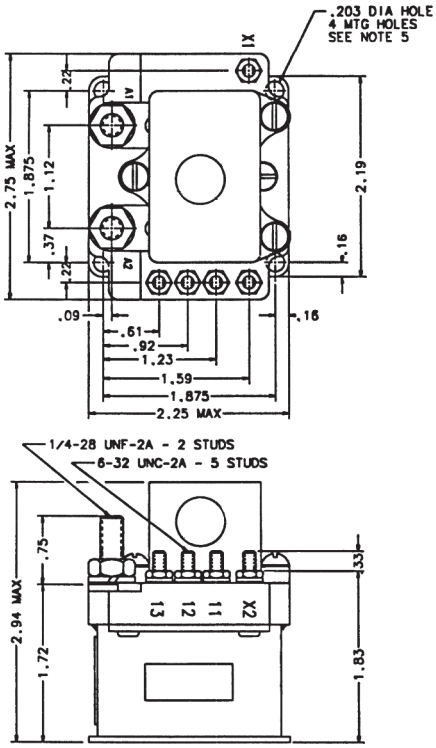

Mounting Style A

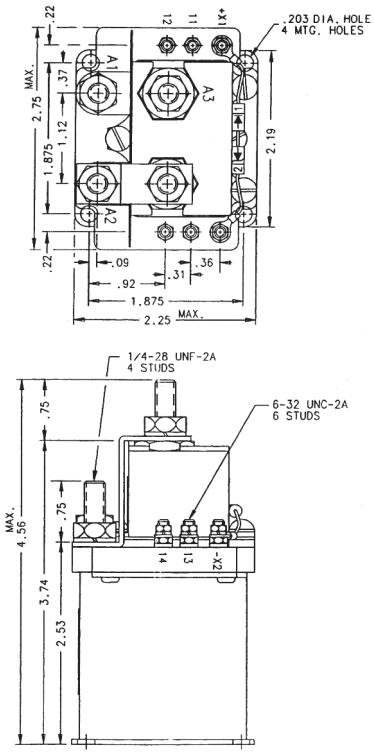

Mounting Style B

Circuit Configurations (Consult factory for other available circuit configurations)

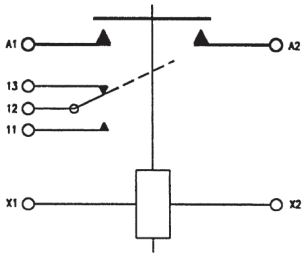

Circuit Configuration 1

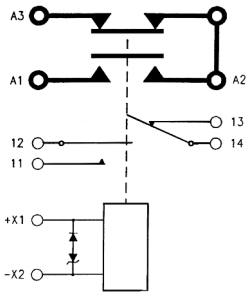

Circuit Configuration 2

HARTMAN Part Number	Construction Type	Mounting Style	Coil Type	Circuit Config.	TE Part Number
A-1077DD	Gasket Sealed	A	Continuous	1	1616055-3
A-1077S	Gasket Sealed	B	Continuous, w/ Suppression	2	1616081-3

For factory-direct application assistance, phone 419-521-9500 or fax 419-526-2749.

Catalog 5-1773450-5
Revised 3-13

www.te.com

Dimensions are shown for reference purposes only. Specifications subject to change.

Dimensions are in millimeters unless otherwise specified.

USA: +1 800 522 6752
Asia Pacific: +86 0 400 820 6015
UK: +44 800 267 666

For additional support numbers please visit www.te.com

D-31 Series, Rated up to 100 Amps, 28 Vdc

Product Facts

- **SPDT, Center Off, Double Break**
- **Gasket Sealed, Vented**
- **Meets many requirements of MIL-PRF-6106**

Performance Data

Electrical Characteristics

Main Contacts —

Main Contact Configuration — SPDT, Center Off, Double Break

Voltage, Nom. — 28 Vdc

Resistive Rating — 100 Amps

Inductive Rating — 100 Amps

Motor Rating — 80 Amps

Overload Rating — 800 Amps

Rupture Rating — 1,000 Amps

Auxiliary Contacts —

Aux. Contact Configuration — SPST, NO

Voltage, Nom. — 115 VAC, 400 Hz or 28 Vdc

Resistive Rating — 3 Amp

Inductive Rating — 3 Amp

Lamp Rating — 1 Amp

General Characteristics

Temperature Range — -55°C to +71°C

Operating Cycles (Life) at Rated Resistive Load, Min. — 50,000 cycles

Operating Cycles (Life) Mechanical, Min. — 100,000 cycles

Altitude — 50,000 ft.

Weight, Max. — 1 lb 15 oz

Coil Characteristics

Duty Cycle — Continuous

Coil Data, X Coil —

Operating Voltage, Nominal — 115 VAC, 400 Hz

Pickup Voltage @ 25°C, Max., Initial — 75 VAC, 400 Hz

Dropout Voltage @ 25°C — 12 V to 38 V

Coil Resistance ±20% @ 25°C — 655 Ohms

Coil Current @ 25°C — .050 Amp DC AV @ 115 VAC, 400 Hz

Coil Data, Y Coil —

Operating Voltage, Nominal — 28 Vdc

Pickup Voltage @ 25°C, Max., Initial — 15 VDC

Dropout Voltage @ 25°C — 2.0 V to 6.5 V

Coil Resistance ±20% @ 25°C — 163 Ohms

Coil Current @ 25°C — .215 Amp Max. @ 28 Vdc

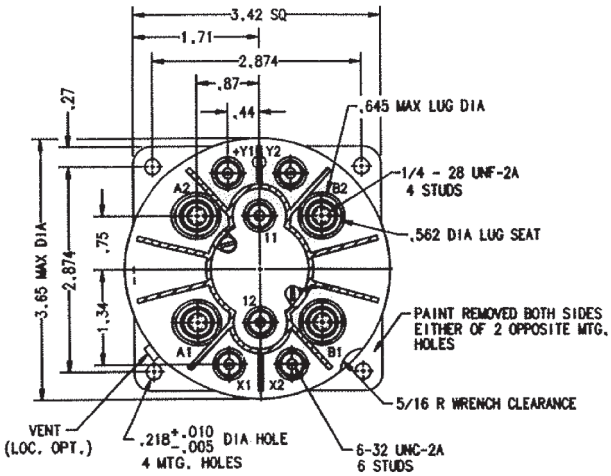

Mounting Style A

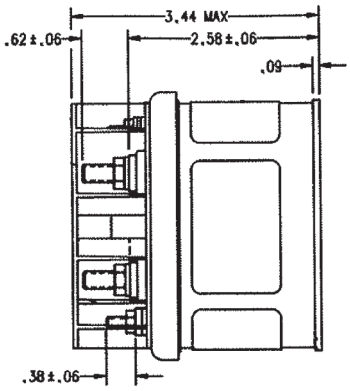

Circuit Configurations

(Consult factory for other available circuit configurations)

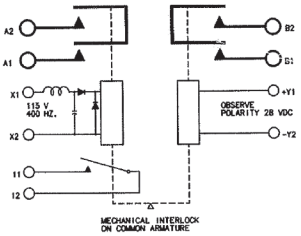

Circuit Configuration 1

HARTMAN Part Number	Construction Type	Mounting Style	Coil Type	Circuit Config.	TE Part Number
D-31BAA	Gasket/Vented	A	Continuous	1	1616097-1

For factory-direct application assistance, phone 419-521-9500 or fax 419-526-2749.

Catalog 5-1773450-5
Revised 3-13

www.te.com

Dimensions are shown for reference purposes only. Specifications subject to change.

Dimensions are in millimeters unless otherwise specified.

USA: +1 800 522 6752
Asia Pacific: +86 0 400 820 6015
UK: +44 800 267 666

For additional support numbers please visit www.te.com

D-32A Series, Rated up to 100 Amps, 28 Vdc

Product Facts

- **2PST, Center Off, Double Break**
- **Gasket Sealed, Vented**
- **Meets many requirements of MIL-PRF-6106**

Performance Data

Electrical Characteristics

Main Contacts —

Main Contact Configuration — 2PST, Center Off

Voltage, Nom. — 28 Vdc

Resistive Rating — 100 Amps

Inductive Rating — 100 Amps

Motor Rating — 80 Amps

Lamp Rating — 50 Amps

Overload Rating — 800 Amps

Rupture Rating — 1,000 Amps

Auxiliary Contacts —

Aux. Contact Configuration — SPST

Voltage, Nom. — 28 Vdc

Resistive Rating — 0.1 Amps

Inductive Rating — 0.1 Amps

Lamp Rating — 0.1 Amps

General Characteristics

Temperature Range — -55°C to +71°C

Operating Cycles (Life) at Rated Resistive Load, Min. — 50,000 cycles

Operating Cycles (Life) Mechanical, Min. — 100,000 cycles

Dielectric Strength —
All Circuits to Ground — 1,250 Vrms
Circuit to Circuit — 1,250 Vrms
Coil to Ground and Aux. Contacts — 1,000 Vrms

Altitude — 50,000 ft.

Weight, Max. — 1.9 lbs

Coil Characteristics

Duty Cycle — Continuous with suppression

Operating Voltage, Nom. — 28 Vdc

Operating Voltage, Max. — 30 Vdc

Pickup Voltage, Max. — 18 Vdc

Dropout Voltage, Max. — 1.5 to 7.5 Vdc

Hold Voltage — 8.0 Vdc

Coil Resistance ±10% @ 77°F — 163 Ohms

Coil Current @ 77°F & 30 Vdc, Max. — 0.215 Amp

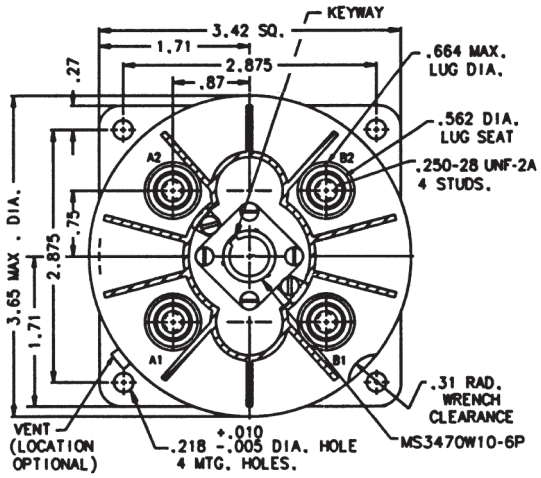

Mounting Style A

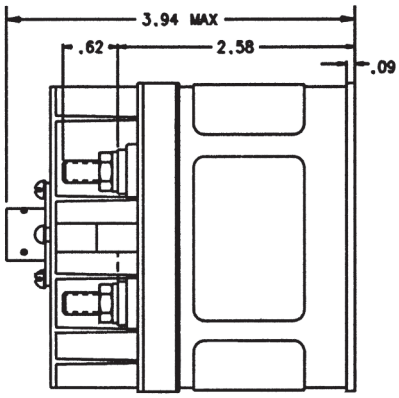

Circuit Configurations

(Consult factory for other available circuit configurations)

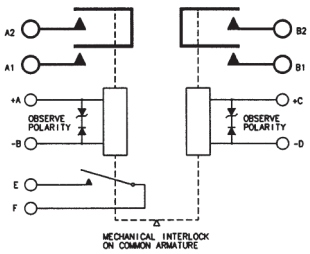

Circuit Configuration 1

HARTMAN Part Number	Construction Type	Mounting Style	Coil Type	Circuit Config.	TE Part Number
D-32A	Gasket/Vented	A	Continuous w/ Suppression	1	1616097-2

For factory-direct application assistance, phone 419-521-9500 or fax 419-526-2749.

Catalog 5-1773450-5
Revised 3-13

www.te.com

Dimensions are shown for reference purposes only. Specifications subject to change.

Dimensions are in millimeters unless otherwise specified.

USA: +1 800 522 6752
Asia Pacific: +86 0 400 820 6015
UK: +44 800 267 666

For additional support numbers please visit www.te.com

DH-25 Series, Rated up to 100 Amps, 28 Vdc

Product Facts

- **SPDT, 1 NO, 1 NC, Double Break**
- **Gasket Sealed or Hermetically Sealed**
- **Meets many requirements of MIL-PRF-6106**

Performance Data

Electrical Characteristics

Contact Arrangement — SPDT, 1 NO, 1 NC, Double Break

Rated Operating Voltage — 28 Vdc

Resistive Rating — 100 Amps

Inductive Rating — 100 Amps

Motor Rating — 60 Amps

Interrupt Rating — 600 Amps

General Characteristics

Temperature Range — -55°C to +85°C

Operating Cycles (Life) at Rated Resistive Load, Min. — 50,000 cycles

Operating Cycles (Life) Mechanical, Min. — 100,000 cycles

Dielectric Strength — All Circuits to Ground — 1,250 Vrms
Circuit to Circuit — 1,250 Vrms
Coil to Ground and Aux. Contacts — 1,000 Vrms

Altitude Max. — 80,000 ft.

Weight — 1.81 lbs

Coil Characteristics

Duty Cycle — Continuous

Operating Voltage, Max. — 32 Vdc

Operating Voltage @ 21°C, Min. — 18 Vdc

Dropout Voltage @ 25°C, Max. — 1.0 to 7 Vdc

Coil Resistance ±20% @ 25°C — 180 Ohms

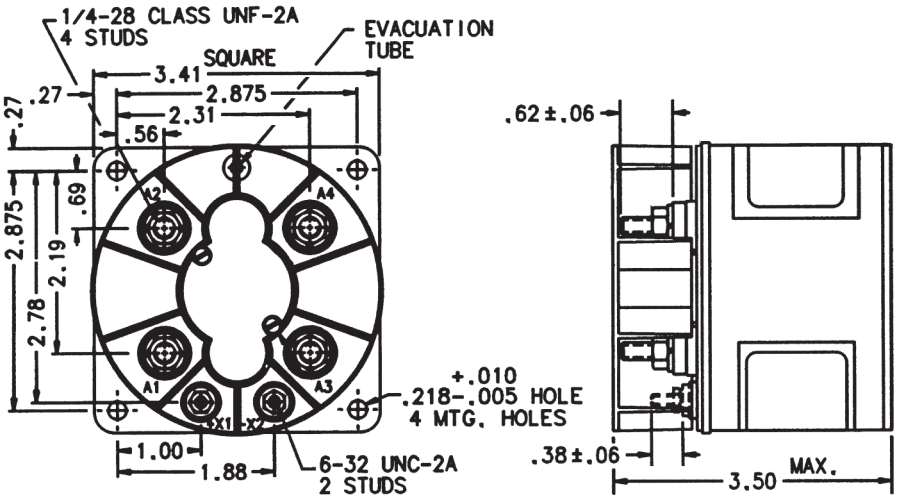

Mounting Style A

Circuit Configurations

(Consult factory for other available circuit configurations)

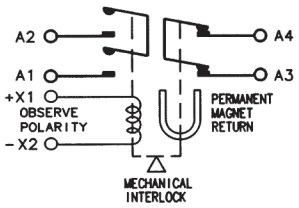

Circuit Configuration 1

HARTMAN Part Number	Construction Type	Mounting Style	Coil Type	Circuit Config.	TE Part Number
DH-25EA	Hermetically Sealed	A	Continuous	1	1616089-4

For factory-direct application assistance, phone 419-521-9500 or fax 419-526-2749.

Catalog 5-1773450-5
Revised 3-13

www.te.com

Dimensions are shown for reference purposes only. Specifications subject to change.

Dimensions are in millimeters unless otherwise specified.

USA: +1 800 522 6752
Asia Pacific: +86 0 400 820 6015
UK: +44 800 267 666

For additional support numbers please visit www.te.com

DHR-31BA Series, Rated up to 100 Amps, 28 Vdc

Product Facts

- **SPDT, Center Off**
- **Hermetically Sealed**

Performance Data

Electrical Characteristics

Main Contacts —

Main Contact Arrangement — SPDT, Center Off

Rated Operating Voltage — 28 Vdc

Resistive Rating — 100 Amps

Inductive Rating — 100 Amps

Motor Rating — 100 Amps

Inrush, Max. — 500 Amps

Auxiliary Contacts —

Aux. Contact Configuration — SPST, NO

Resistive Rating — 5 Amp

Inductive Rating — 5 Amp

General Characteristics

Temperature Range — -55°C to +120°C

Operating Cycles (Life) at Rated Resistive Load, Min. — 50,000 cycles

Weight — 1 lb 13 oz

Coil Characteristics

Duty Cycle — Continuous

Operating Voltage, Nom. —
Coil X1-X2 (120 V, 400 Hz) —
Pickup 100 V Max. Hot
Dropout 25 V ± 20 V
Nom. Resistance 1050 Ohms ± 10%
Coil Y1-Y2 (28 Vdc) —
Pickup 20 Vdc Max. Hot
Dropout 1.5 to 7 Vdc
Nom. Resistance 163 Ohms ± 10%

Coil Current @ Nom. 120 V — X1-X2 — 0.12 Amp at 25°C

Coil Current @ Nom. 28 Vdc — Y1-Y2 — 0.19 Amp at 25°C

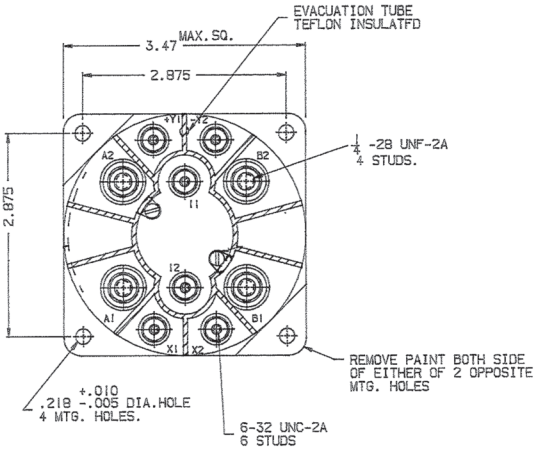

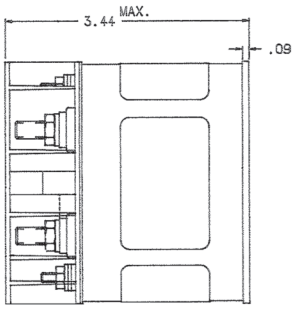

Mounting Style A

Circuit Configurations

(Consult factory for other available circuit configurations)

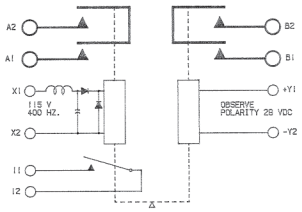

Circuit Configuration 1

For factory-direct application assistance, phone 419-521-9500 or fax 419-526-2749.

HARTMAN Part Number	Construction Type	Mounting Style	Coil Type	Circuit Config.	TE Part Number
DHR-31BA	Hermetically Sealed	A	Continuous	1	1616098-1

Dimensions are shown for reference purposes only. Specifications subject to change.

Dimensions are in millimeters unless otherwise specified.

USA: +1 800 522 6752
Asia Pacific: +86 0 400 820 6015
UK: +44 800 267 666

For additional support numbers please visit www.te.com

A1077 Series, Rated up to 200 Amps, 28 Vdc

Product Facts

- **SPST NO, Double Break or SPDT Double Break**
- **Gasket Sealed**
- **Auxiliary contacts available**
- **Meets many requirements of MIL-PRF-6106**

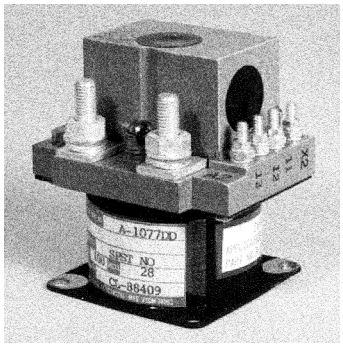

For factory-direct application assistance, phone 419-521-9500 or fax 419-526-2749.

Performance Data

Electrical Characteristics

Contact Arrangement — SPST NO, Double Break or SPDT Double Break

Rated Operating Voltage — 28 Vdc

Resistive Rating — 200 Amps

Inrush Rating — 800 Amps

General Characteristics

Temperature Range — -55°C to +71°C

Operating Cycles (Life) at Rated Resistive Load, Min. — 50,000 cycles

Operating Cycles (Life) Mechanical, Min. — 100,000 cycles

Dielectric Strength —
All Circuits to Ground — 1,250 Vrms
Circuit to Circuit — 1,250 Vrms
Coil to Ground and Aux. Contacts — 1,000 Vrms

Weight — 1.50 to 1.90 lbs

Coil Characteristics

Duty Cycle — Continuous

Operating Voltage, Max. — 32 Vdc

Operating Voltage, Nom. — 24 Vdc

Pickup Voltage @ 25°C, Max. — 16.5 Vdc

Dropout Voltage — 1.0 to 7 Vdc

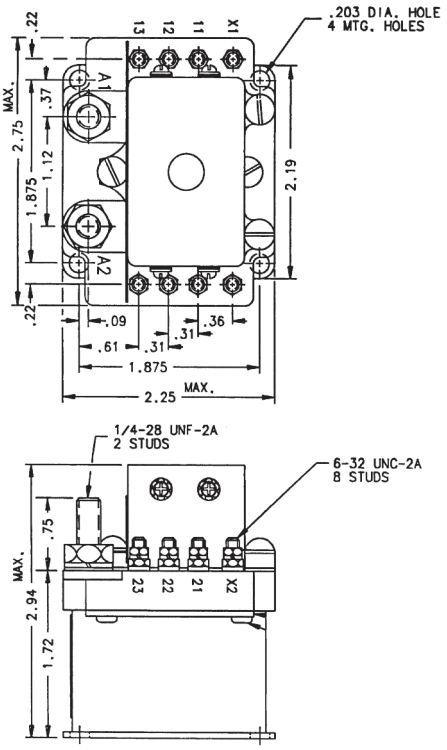

Mounting Style A

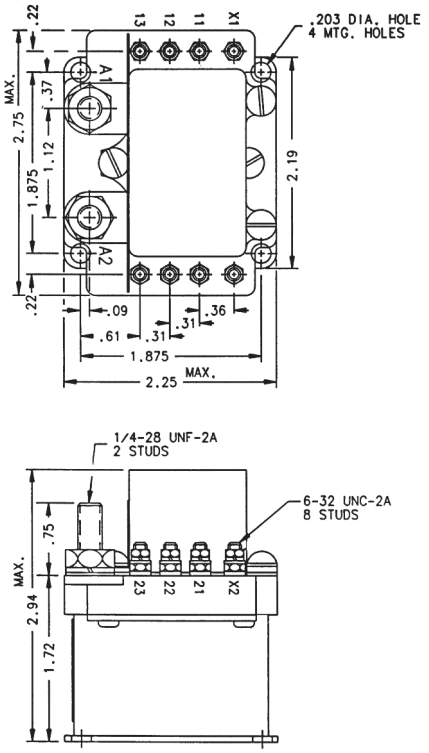

Mounting Style B

For factory-direct application assistance, phone 419-521-9500 or

Catalog 5-1773450-5
Revised 3-13

www.te.com

Dimensions are shown for reference purposes only. Specifications subject to change.

Dimensions are in millimeters unless otherwise specified.

USA: +1 800 522 6752
Asia Pacific: +86 0 400 820 6015
UK: +44 800 267 666

For additional support numbers please visit www.te.com

A1077 Series, Rated up to 200 Amps, 28 Vdc (Continued)

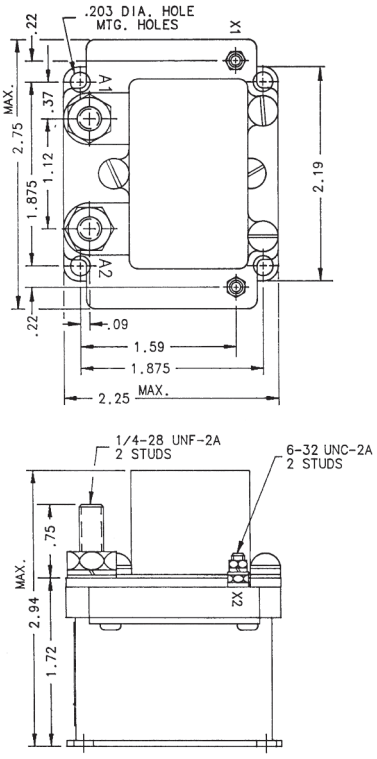

Mounting Style C

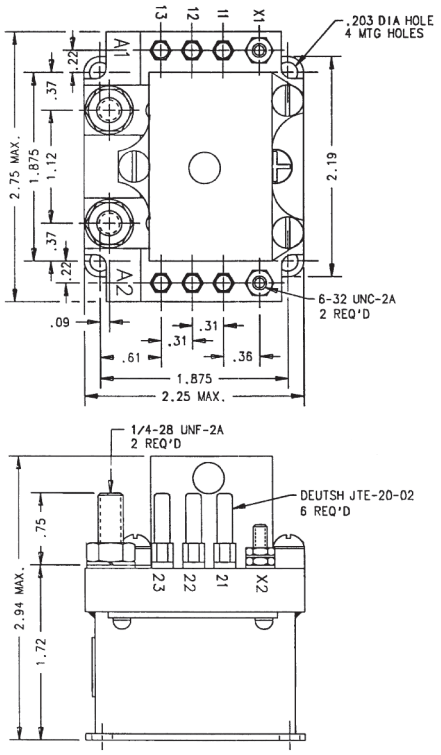

Mounting Style D

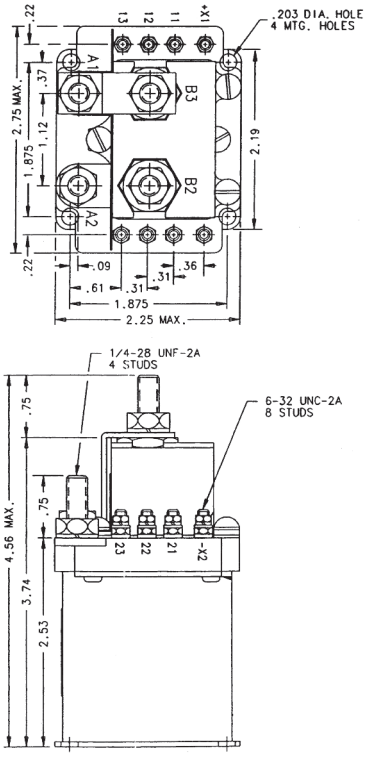

Mounting Style E

For factory-direct application assistance, phone 419-521-9500 or fax 419-526-2749.

Dimensions are shown for reference purposes only. Specifications subject to change.

Dimensions are in millimeters unless otherwise specified.

USA: +1 800 522 6752
Asia Pacific: +86 0 400 820 6015
UK: +44 800 267 666

For additional support numbers please visit www.te.com

A1077 Series, Rated up to 200 Amps, 28 Vdc (Continued)

Circuit Configurations (Consult factory for other available circuit configurations)

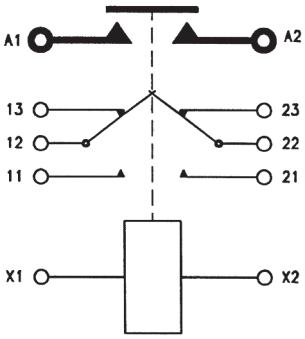

Circuit Configuration 1

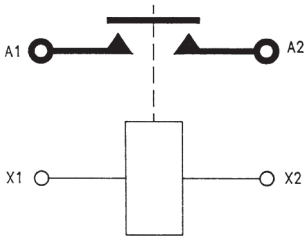

Circuit Configuration 2

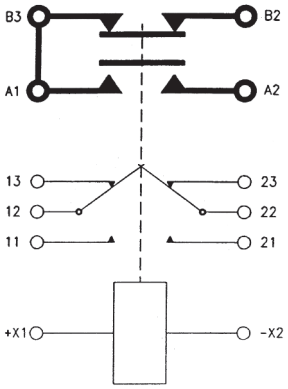

Circuit Configuration 3

HARTMAN Part Number	Construction Type	Mounting Style	Coil Type	Circuit Config.	TE Part Number
A-1077D	Gasket Sealed	A	Intermittent	1	1616055-2
A-1077F	Gasket Sealed	B	Continuous	1	1616055-4
A-1077G	Gasket Sealed	C	Continuous	2	1616055-5
A-1077V	Gasket Sealed	D	Continuous	1	1616055-6
A-1077W	Gasket Sealed	E	Continuous	3	1616081-4

A876 Series, Rated up to 200 Amps, 28 Vdc

Product Facts

- **SPST NC, Double Break**
- **Gasket Sealed**
- **Auxiliary contacts available**
- **Meets many requirements of MIL-PRF-6106**

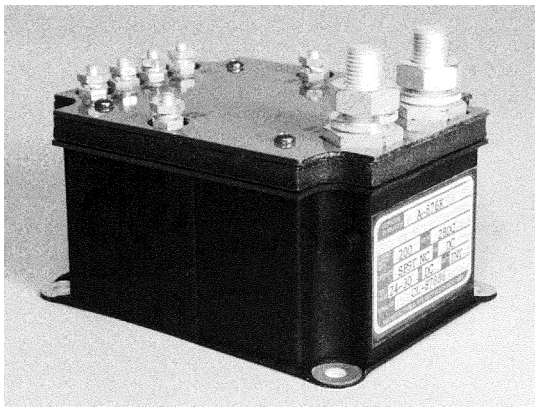

Performance Data

Electrical Characteristics

Main Contacts —

Main Contact Configuration — SPST NC, Double Break

Rated Operating Voltage — 28 Vdc

Resistive Rating — 200 Amps

Inrush, Carry Only — 900 Amps

Auxiliary Contacts —

Aux. Contact Configuration — DPST NO

Voltage, Nom. — 28 Vdc

Resistive Rating — 5 Amps

General Characteristics

Temperature Range — -55°C to +71°C

Operating Cycles (Life) at Rated Resistive Load, Min. — 50,000 cycles

Operating Cycles (Life) Mechanical, Min. — 100,000 cycles

Dielectric Strength —
All Circuits to Ground — 1,250 Vrms
Circuit to Circuit — 1,250 Vrms
Coil to Ground and Aux. Contacts — 1,000 Vrms

Weight — 3.00 lbs

Coil Characteristics

Duty Cycle — Intermittent

Operating Voltage — 24 to 30 Vdc

Pickup Voltage, Max. — 18 Vdc

Dropout Voltage — 1 to 7 Vdc

Coil Resistance ± 20% @ 25°C — 19.7 Ohms

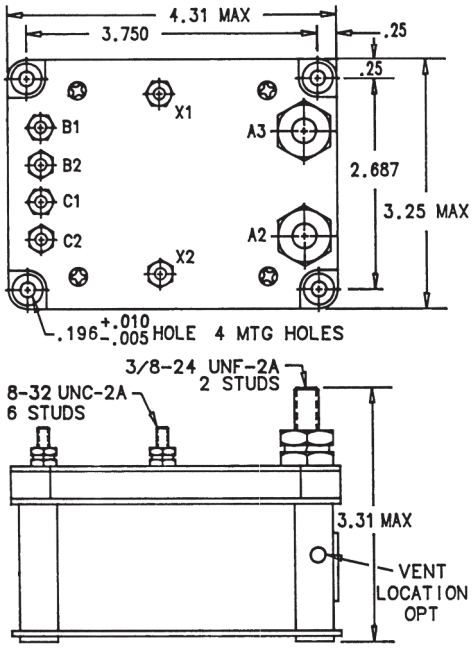

Mounting Style A

Circuit Configurations (Consult factory for other available circuit configurations)

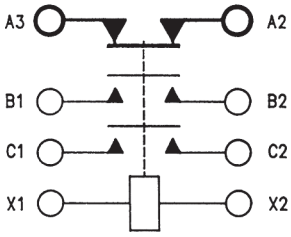

Circuit Configuration 1

For factory-direct application assistance, phone 419-521-9500 or fax 419-526-2749.

HARTMAN Part Number	Construction Type	Mounting Style	Coil Type	Circuit Config.	TE Part Number
A-876K	Gasket/Vented	A	Intermittent	1	1616059-1

Catalog 5-1773450-5
Revised 3-13

www.te.com

Dimensions are shown for reference purposes only. Specifications subject to change.

Dimensions are in millimeters unless otherwise specified.

USA: +1 800 522 6752
Asia Pacific: +86 0 400 820 6015
UK: +44 800 267 666

For additional support numbers please visit www.te.com

A1077 Series, Rated up to 230 Amps, 28 Vdc

Product Facts

- **Gasket Sealed**
- **Auxiliary contacts available**
- **Meets many requirements of MIL-PRF-6106**

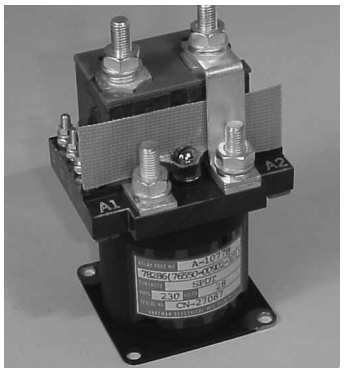

Performance Data

Electrical Characteristics

Contact Arrangement — SPST NO, Double Break or SPDT Double Break

Rated Operating Voltage — 28 Vdc

Resistive Rating — 230 Amps

Inrush Rating — 600 Amps

General Characteristics

Temperature Range — -55°C to +71°C

Operating Cycles (Life) at Rated Resistive Load, Min. — 50,000 cycles

Operating Cycles (Life) Mechanical, Min. — 100,000 cycles

Dielectric Strength —
All Circuits to Ground — 1,250 Vrms
Circuit to Circuit — 1,250 Vrms
Coil to Ground and Aux. Contacts — 1,000 Vrms

Weight — 1.90 lbs

Coil Characteristics

Duty Cycle — Continuous

Operating Voltage, Max. — 30 Vdc

Operating Voltage, Nom. — 24 Vdc

Pickup Voltage @ 25°C, Max. — 16.5 Vdc

Dropout Voltage — 0.5 to 7 Vdc

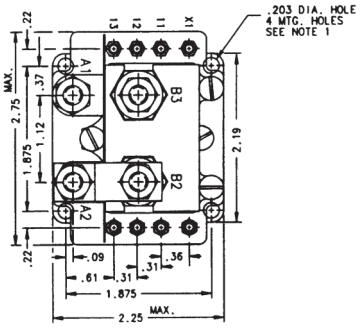

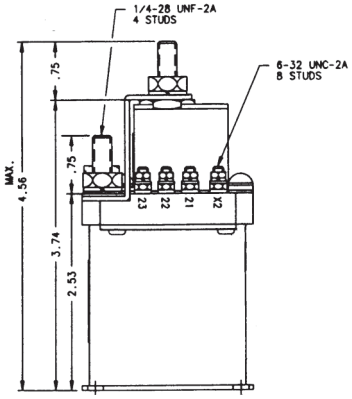

Mounting Style A

Circuit Configurations (Consult factory for other available circuit configurations)

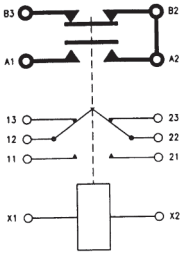

Circuit Configuration 1

For factory-direct application assistance, phone 419-521-9500 or fax 419-526-2749.

HARTMAN Part Number	Construction Type	Mounting Style	Coil Type	Circuit Config.	TE Part Number
A-1077B	Gasket Sealed	A	Continuous	1	1616081-1

Catalog 5-1773450-5
Revised 3-13

www.te.com

Dimensions are shown for reference purposes only. Specifications subject to change.

Dimensions are in millimeters unless otherwise specified.

USA: +1 800 522 6752
Asia Pacific: +86 0 400 820 6015
UK: +44 800 267 666

For additional support numbers please visit www.te.com

A-770 and AR-770 Series, Rated up to 300 Amps, 28 Vdc

Product Facts

- **SPST NO, Double Break**
- **Gasket Sealed**
- **Auxiliary contacts available**
- **Meets many requirements of MIL-PRF-6106**

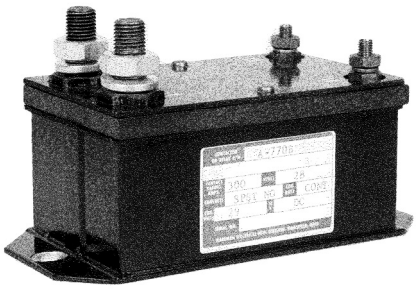

Performance Data

Electrical Characteristics

Contact Arrangement — SPST NO, Double Break

Rated Operating Voltage — 28 Vdc

Resistive Rating — 300 Amps

Motor Load — 300 Amps

Rupture Rating — 3,000 Amps

General Characteristics

Temperature Range — -55°C to +71°C

Operating Cycles (Life) at Rated Resistive Load, Min. — 50,000 cycles

Operating Cycles (Life) Mechanical, Min. — 100,000 cycles

Dielectric Strength —
All Circuits to Ground — 1,250 Vrms
Circuit to Circuit — 1,250 Vrms
Coil to Ground and Aux. Contacts — 1,000 Vrms

Altitude Max. — 50,000 ft.

Weight — 2.00 lbs

Coil Characteristics

Duty Cycle — DC Continuous or Intermittent or Continuous or Intermittent with suppression

Operating Voltage, Nom. — 28 Vdc

Pickup Voltage @ 25°C, Max. — 16 Vdc

Dropout Voltage @ 25°C — 1.5 to 5 Vdc

Coil Current, Max., Holding —
Coil Type A — 0.4 Amp
Coil Type B — 0.625 Amp

For factory-direct application assistance, phone 419-521-9500 or fax 419-526-2749.

Catalog 5-1773450-5
Revised 3-13

www.te.com

Dimensions are shown for reference purposes only. Specifications subject to change.

Dimensions are in millimeters unless otherwise specified.

USA: +1 800 522 6752
Asia Pacific: +86 0 400 820 6015
UK: +44 800 267 666

For additional support numbers please visit www.te.com

A-770 and AR-770 Series, Rated up to 300 Amps, 28 Vdc (Continued)

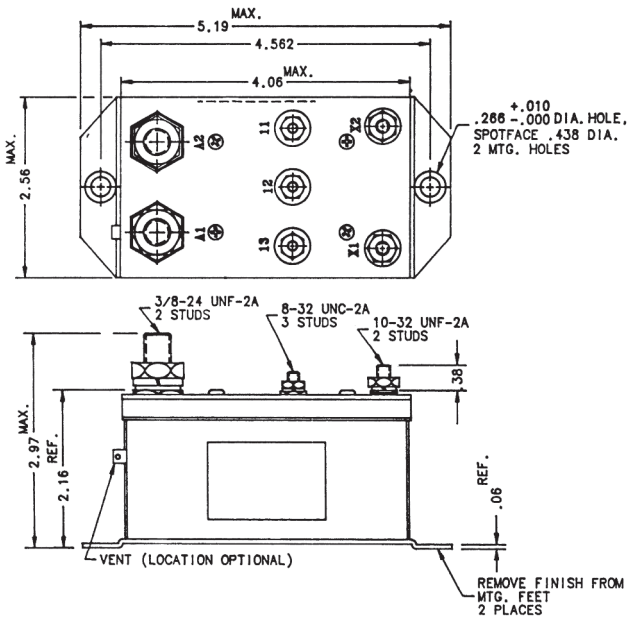

Mounting Style A

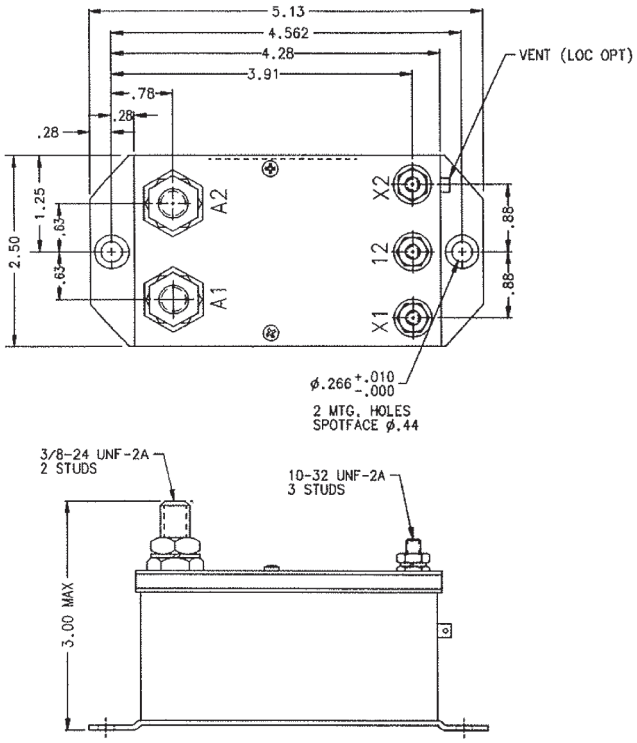

Mounting Style B

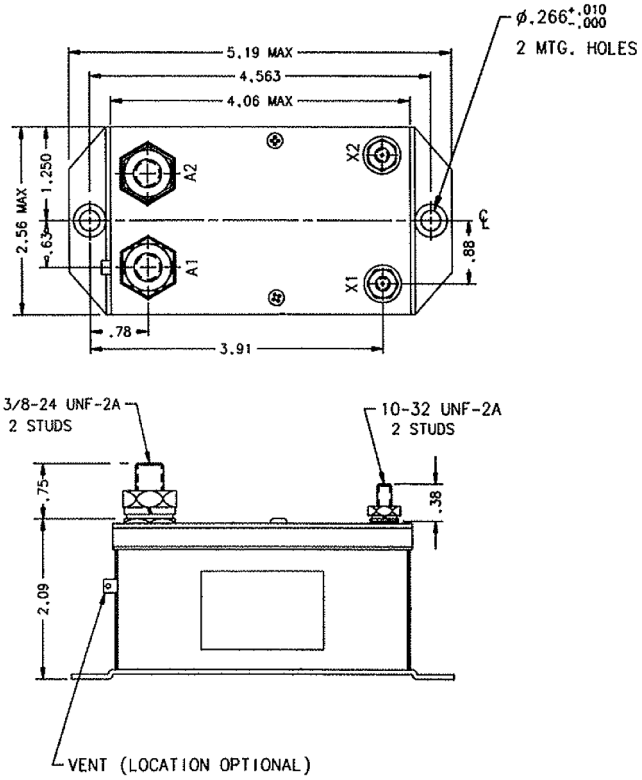

Mounting Style C

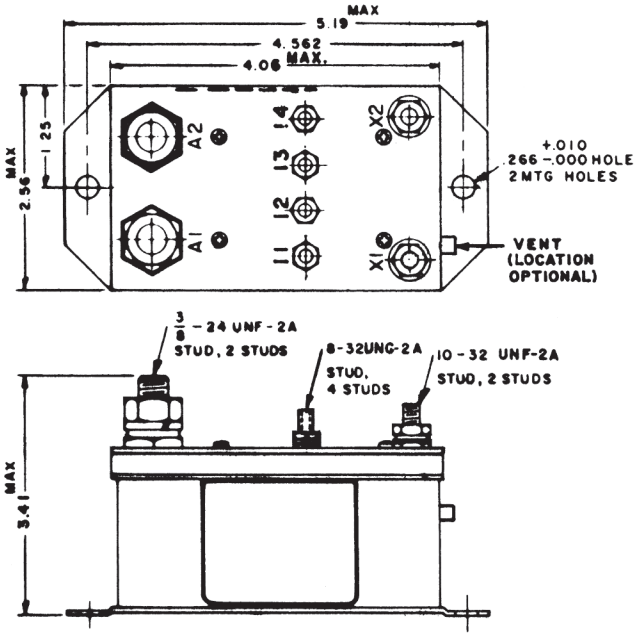

Mounting Style D

For factory-direct application assistance, phone 419-521-9500 or fax 419-526-2749.

A-770 and AR-770 Series, Rated up to 300 Amps, 28 Vdc (Continued)

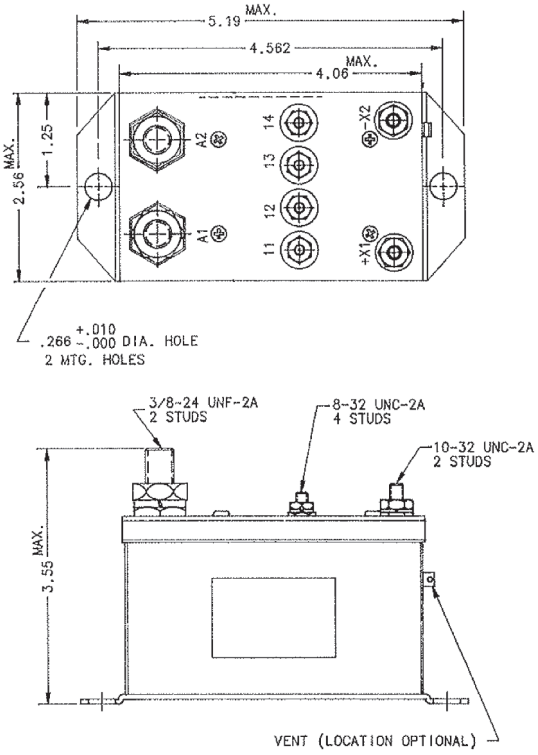

Mounting Style E

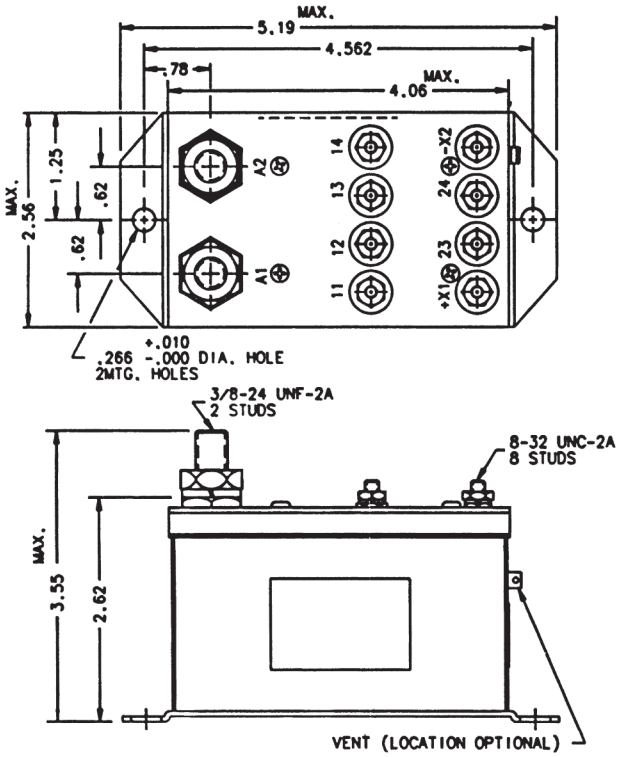

Mounting Style F

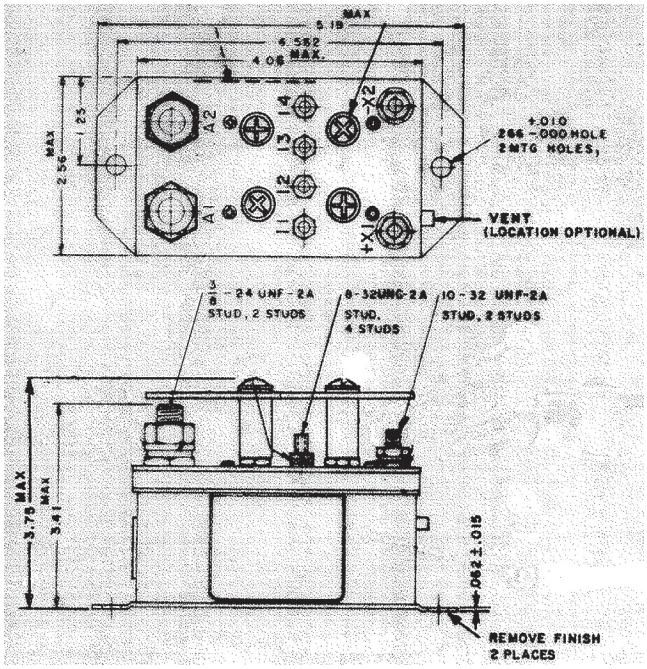

Mounting Style G

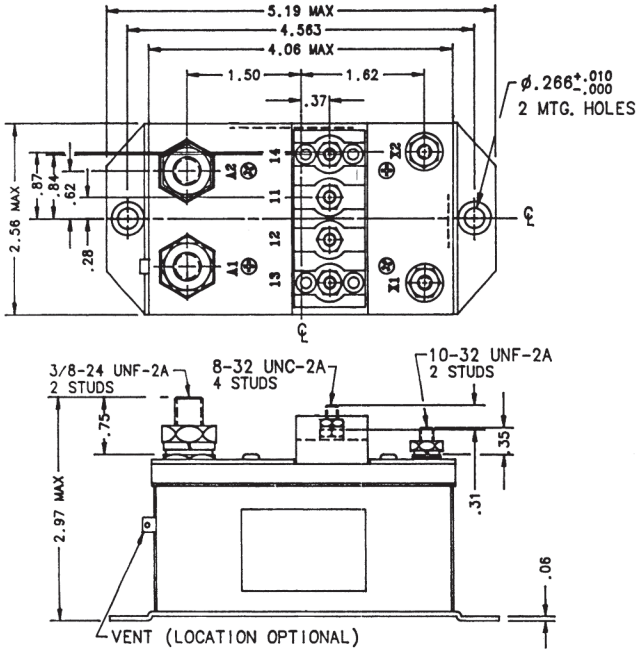

Mounting Style H

For factory-direct application assistance, phone 419-521-9500 or fax 419-526-2749.

A-770 and AR-770 Series, Rated up to 300 Amps, 28 Vdc (Continued)

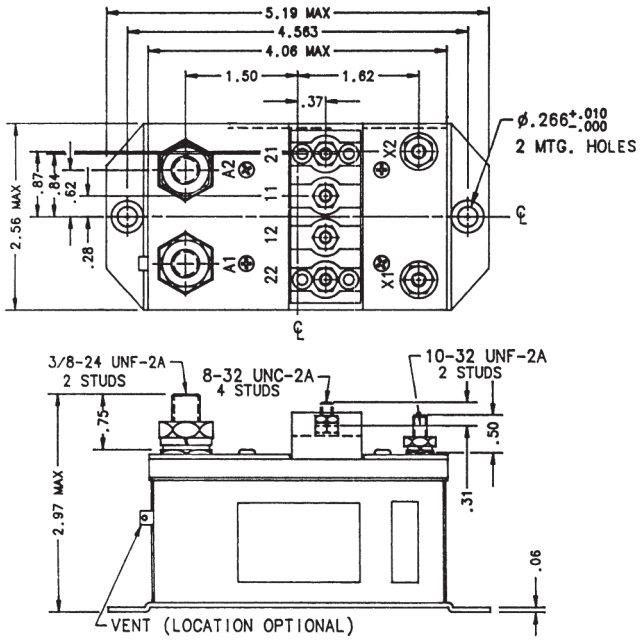

Mounting Style I

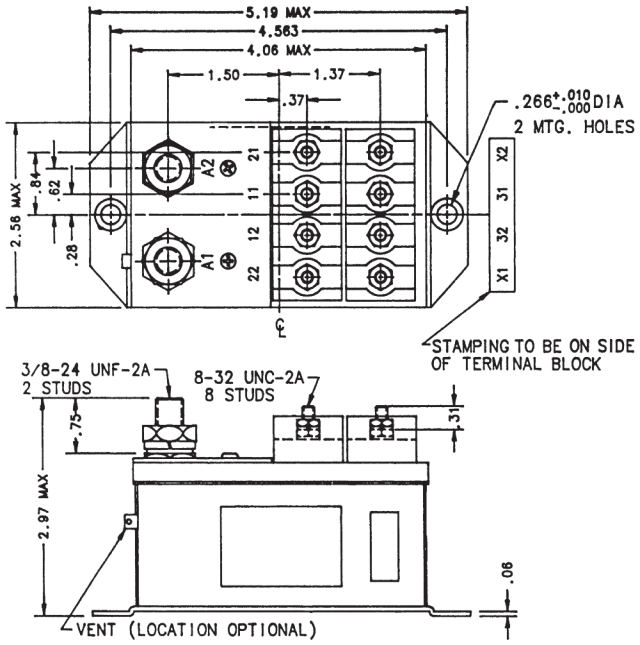

Mounting Style J

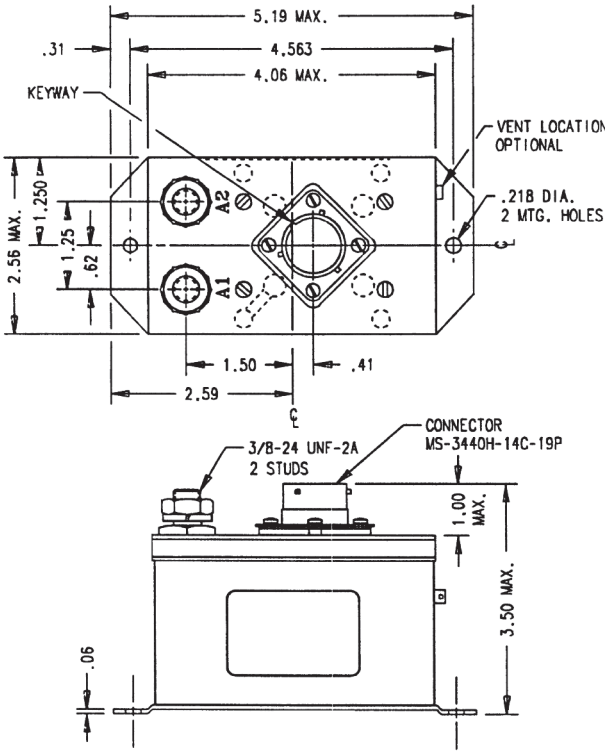

Mounting Style K

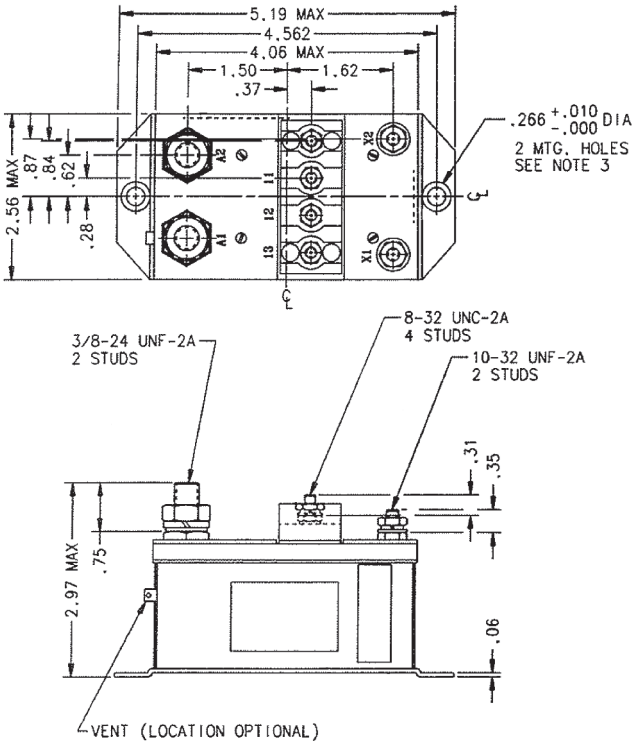

Mounting Style L

For factory-direct application assistance, phone 419-521-9500 or fax 419-526-2749.

A-770 and AR-770 Series, Rated up to 300 Amps, 28 Vdc (Continued)

Circuit Configurations (Consult factory for other available circuit configurations)

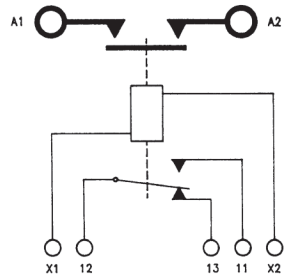

Circuit Configuration 1

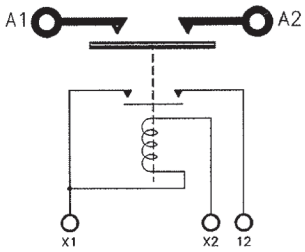

Circuit Configuration 2

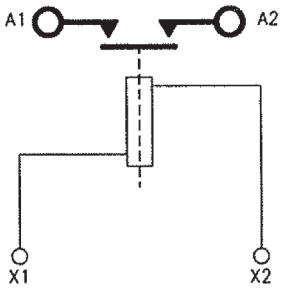

Circuit Configuration 3

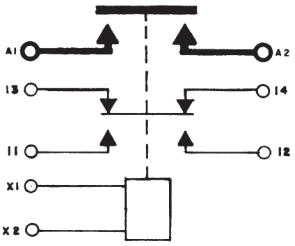

Circuit Configuration 4

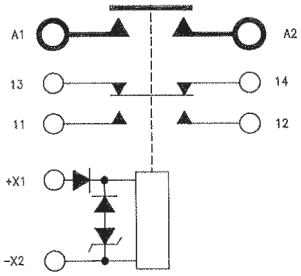

Circuit Configuration 5

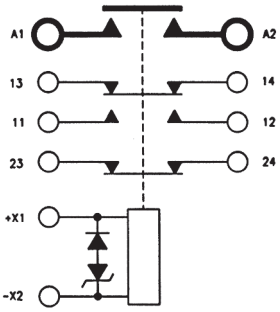

Circuit Configuration 6

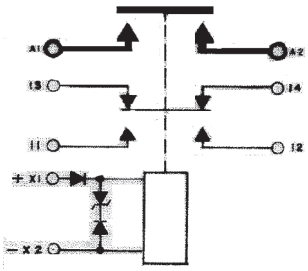

Circuit Configuration 7

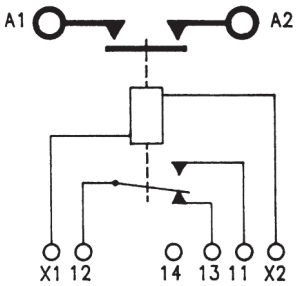

Circuit Configuration 8

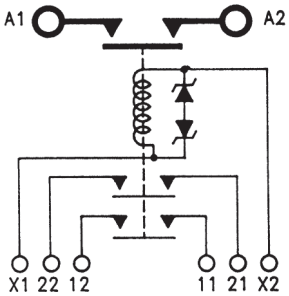

Circuit Configuration 9

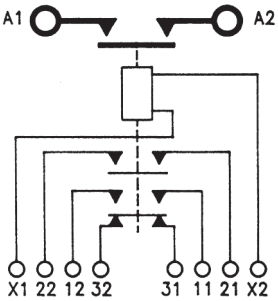

Circuit Configuration 10

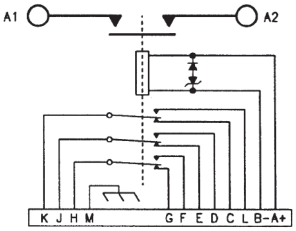

Circuit Configuration 11

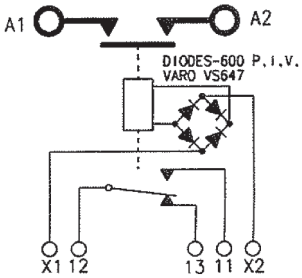

Circuit Configuration 12

HARTMAN Part Number	Construction Type	Mounting Style	Coil Type	Circuit Config.	TE Part Number
A-770AM	Gasket/Vented	A	Continuous	1	3-1616058-1
A-770N	Gasket/Vented	B	Continuous	2	3-1616058-3
A-770RF	Gasket/Vented	C	Continuous	3	3-1616058-4
A-770RG	Gasket/Vented	D	Intermittent	4	3-1616058-5
A-770RN	Gasket/Vented	E	Continuous w/Supp.	5	3-1616058-8
A-770RSS	Gasket/Vented	F	Continuous w/Supp.	6	3-1616058-9
A-770RV	Gasket/Vented	G	Intermittent w/Supp.	7	1616530-7
A-770W	Gasket/Vented	H	Continuous	8	4-1616058-1
A-770WA-2	Gasket/Vented	I	Intermittent	9	4-1616058-2
A-770WA-3	Gasket/Vented	J	Intermittent	10	4-1616058-3
A-770WF	Gasket/Vented	K	Continuous	11	4-1616058-4
AR-770W	Gasket/Vented	L	Continuous	12	1616063-1

For factory-direct application assistance, phone 419-521-9500 or fax 419-526-2749.

Catalog 5-1773450-5
Revised 3-13

www.te.com

Dimensions are shown for reference purposes only. Specifications subject to change.

Dimensions are in millimeters unless otherwise specified.

USA: +1 800 522 6752
Asia Pacific: +86 0 400 820 6015
UK: +44 800 267 666

For additional support numbers please visit www.te.com

A-848 Series, Rated up to 300 Amps, 24/48 Vdc

Product Facts

- **SPST NO, DPST NC, Double break**
- **Gasket sealed**
- **Meets many requirements of MIL-PRF-6106**
- **Designed for series/parallel starting systems**

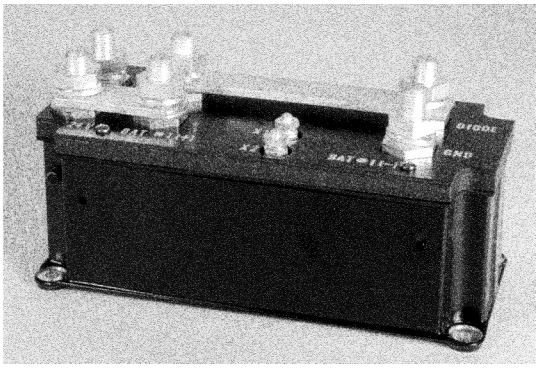

Performance Data

Electrical Characteristics

Contact Arrangement — SPST NO, DPST NC, Double Break

Rated Operating Voltage — 24/48 Vdc

Resistive Rating — 300 Amps

Inrush for 30 sec — 1,100 Amps

Inrush — 700 Amps

General Characteristics

Temperature Range — -55°C to +71°C

Operating Cycles (Life) at Rated Resistive Load, Min. — 50,000 cycles

Operating Cycles (Life) Mechanical, Min. — 100,000 cycles

Dielectric Strength —
All Circuits to Ground — 1,250 Vrms
Circuit to Circuit — 1,250 Vrms
Coil to Ground and Aux. Contacts — 1,000 Vrms

Weight — 3.5 lbs

Coil Characteristics

Duty Cycle — Intermittent

Operating Voltage, Max. — 31 Vdc

Operating Voltage, Min. — 18 Vdc

Pickup Voltage @ 25°C, Max., Initial — 12 Vdc

Dropout Voltage — 1.5 to 7 Vdc

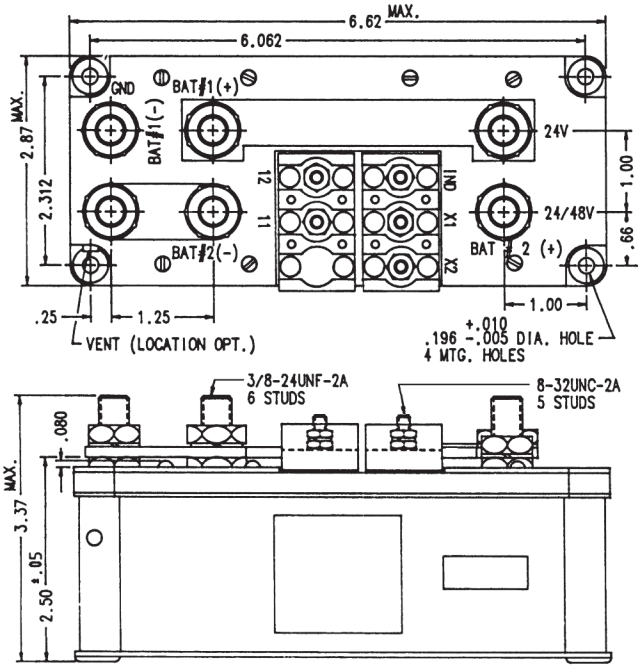

Mounting Style A

Circuit Configurations (Consult factory for other available circuit configurations)

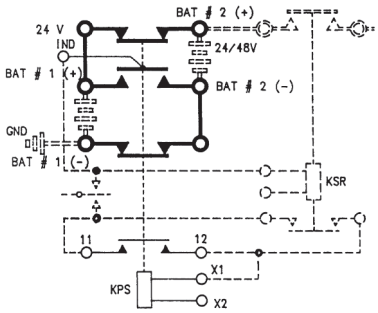

Circuit Configuration 1

HARTMAN Part Number	Construction Type	Mounting Style	Coil Type	Circuit Config.	TE Part Number
A-848KH	Gasket/Vented	A	Intermittent	1	1616082-2
A-848KH-2	Gasket/Vented	A	Intermittent	1	1616082-4

For factory-direct application assistance, phone 419-521-9500 or fax 419-526-2749.

Catalog 5-1773450-5
Revised 3-13

www.te.com

Dimensions are shown for reference purposes only. Specifications subject to change.

Dimensions are in millimeters unless otherwise specified.

USA: +1 800 522 6752
Asia Pacific: +86 0 400 820 6015
UK: +44 800 267 666

For additional support numbers please visit www.te.com

A-848 Series, Rated up to 300 Amps, 28 Vdc

Product Facts

- **DPST NO, Double break and DPDT Double break**
- **Gasket sealed**
- **Auxiliary contacts available**
- **Meets many requirements of MIL-PRF-6106**

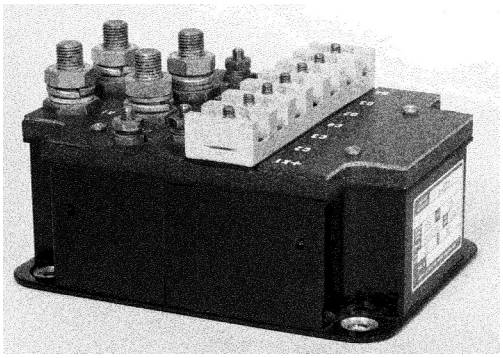

Performance Data

Electrical Characteristics

Contact Arrangement —
A-848MAS/MLS: DPST NO, Double Break
A-848KLC: DPDT Double Break

Rated Operating Voltage — 28 Vdc

Resistive Rating — 300 Amps, A-848KLC – 200 Amps

General Characteristics

Temperature Range — -55°C to +71°C

Operating Cycles (Life) at Rated Resistive Load, Min. — 50,000 cycles

Operating Cycles (Life) Mechanical, Min. — 100,000 cycles

Dielectric Strength —
All Circuits to Ground — 1,250 Vrms
Circuit to Circuit — 1,250 Vrms
Coil to Ground and Aux. Contacts — 1,000 Vrms

Weight — 3.00 lbs

Coil Characteristics

Duty Cycle — Continuous

Operating Voltage, Nom. — 28 Vdc

Pickup Voltage, Max. — 18 Vdc

Dropout Voltage — 9 Vdc (12 Vdc Hot)

Coil Current, Inrush, Max. — 3.0 Amp

Coil Current, Holding, Max. — 0.35 Amp

Circuit Configurations (Consult factory for other available circuit configurations)

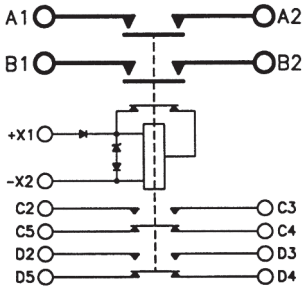

Circuit Configuration 1

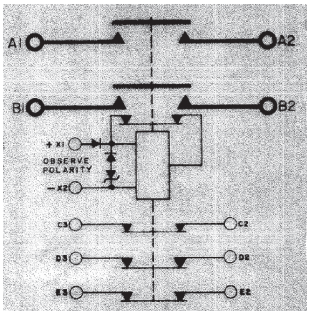

Circuit Configuration 2

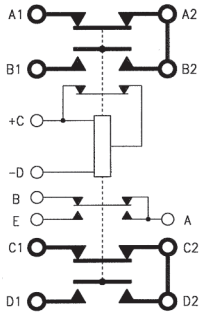

Circuit Configuration 3

HARTMAN Part Number	Construction Type	Mounting Style	Coil Type	Circuit Config.	TE Part Number
A-848MAS	Gasket/Vented	A	Continuous w/Supp., Economizing	1	1616102-2
A-848MLS	Gasket/Vented	B	Continuous w/Supp., Economizing	2	1616102-3
A-848KLC	Gasket/Vented	C	Continuous, Economizing	3	1616082-6

For factory-direct application assistance, phone 419-521-9500 or fax 419-526-2749.

Catalog 5-1773450-5
Revised 3-13

www.te.com

Dimensions are shown for reference purposes only. Specifications subject to change.

Dimensions are in millimeters unless otherwise specified.

USA: +1 800 522 6752
Asia Pacific: +86 0 400 820 6015
UK: +44 800 267 666

For additional support numbers please visit www.te.com

A-848 Series, Rated up to 300 Amps, 28 Vdc (Continued)

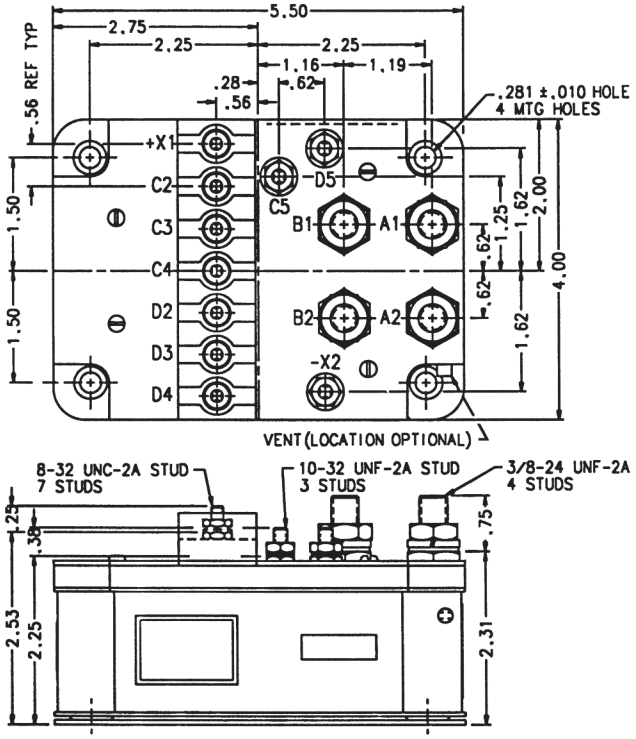

Mounting Style A

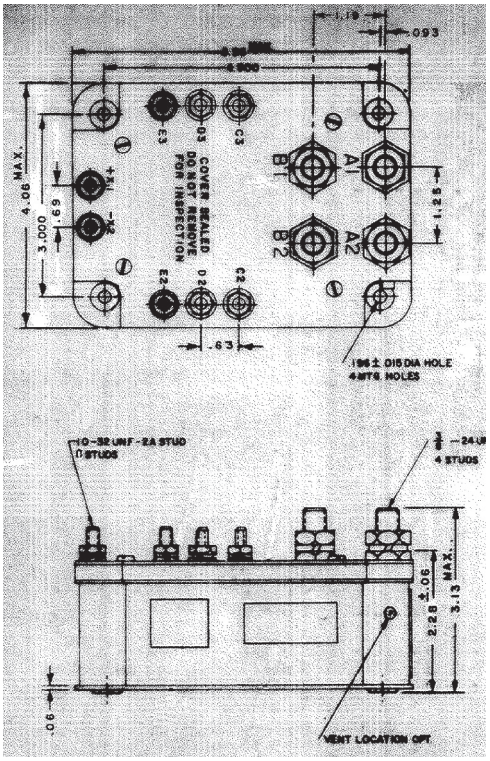

Mounting Style B

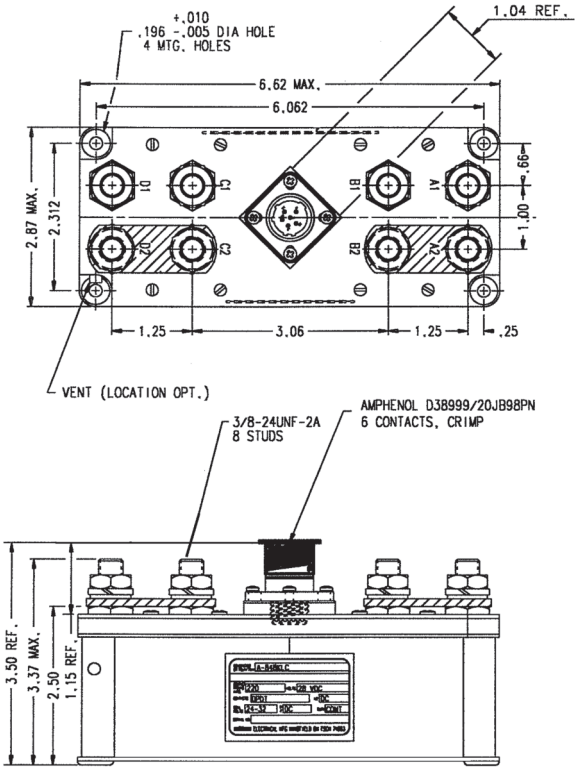

Mounting Style C

For factory-direct application assistance, phone 419-521-9500 or fax 419-526-2749.

AH-965 Series, Rated up to 300 Amps, 30 Vdc

Product Facts

- **SPDT NO, SPST NC**
- **Hermetically sealed**
- **Auxiliary contacts available**
- **Meets many requirements of MIL-PRF-6106**

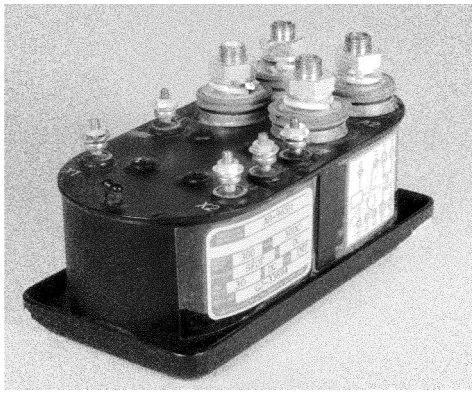

Performance Data

Electrical Characteristics

Contact Arrangement — SPDT, Double Break

Rated Operating Voltage — 30 Vdc

Resistive Rating — 300 Amps

Carry Only for 30 sec — 1,000 Amps

Carry Only, Inrush — 1,500 Amps

Rupture Rating — 3,000 Amps

General Characteristics

Temperature Range — -65°C to +120°C

Operating Cycles (Life) at Rated Resistive Load, Min. — 50,000 cycles

Operating Cycles (Life) Mechanical, Min. — 100,000 cycles

Dielectric Strength —
All Circuits to Ground — 1,250 Vrms
Circuit to Circuit — 1,250 Vrms
Coil to Ground and Aux. Contacts — 1,000 Vrms

Altitude, Max. — 50,000 ft.

Weight, Max. — 2.88 lbs

Coil Characteristics

Duty Cycle — Intermittent, 3 minutes max.

Operating Voltage, Max. — 30 Vdc

Pickup Voltage, Max. Hot — 20 Vdc

Dropout Voltage — 0.5 to 5 Vdc

For factory-direct application assistance, phone 419-521-9500 or fax 419-526-2749.

Catalog 5-1773450-5
Revised 3-13

www.te.com

Dimensions are shown for reference purposes only. Specifications subject to change.

Dimensions are in millimeters unless otherwise specified.

USA: +1 800 522 6752
Asia Pacific: +86 0 400 820 6015
UK: +44 800 267 666

For additional support numbers please visit www.te.com

AH-965 Series, Rated up to 300 Amps, 30 Vdc (Continued)

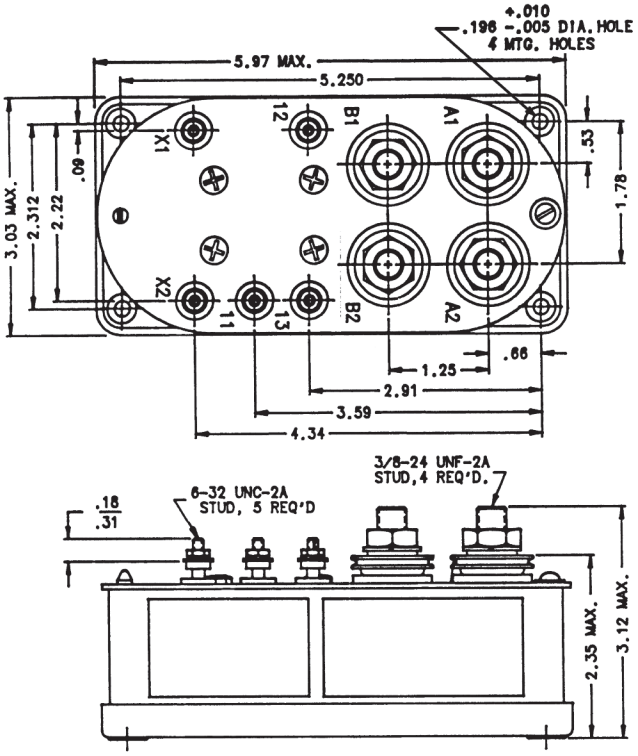

Mounting Style A

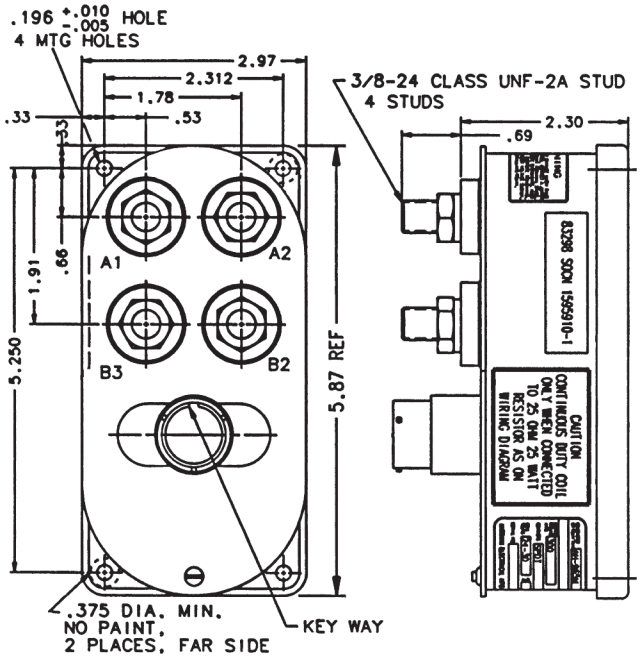

Mounting Style B

Circuit Configurations (Consult factory for other available circuit configurations)

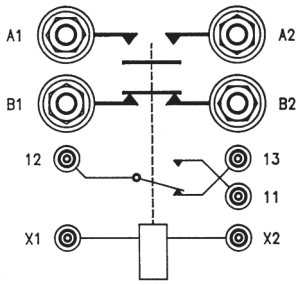

Circuit Configuration 1

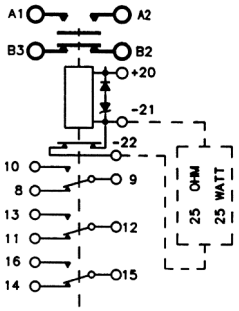

Circuit Configuration 2

HARTMAN Part Number	Construction Type	Mounting Style	Coil Type	Circuit Config.	TE Part Number
AH-965H	Hermetically Sealed	A	Intermittent	1	1616084-1
AH-965M	Hermetically Sealed	B	Continuous w/ External 25 Ohm/25 Watt Resistor Connected	2	1616084-2

For factory-direct application assistance, phone 419-521-9500 or fax 419-526-2749.

Dimensions are shown for reference purposes only. Specifications subject to change.

Dimensions are in millimeters unless otherwise specified.

USA: +1 800 522 6752
Asia Pacific: +86 0 400 820 6015
UK: +44 800 267 666

For additional support numbers please visit www.te.com

A-400 Series, Rated up to 400 Amps, 28 Vdc

Product Facts

- **SPST NO, Double break**
- **Gasket sealed**
- **Auxiliary contacts available**
- **Meets many requirements of MIL-PRF-6106**

Performance Data

Electrical Characteristics

Contact Arrangement — SPST NO, Double Break

Rated Operating Voltage — 28 Vdc

Resistive Rating — 400 Amps

Inductive Rating — 100 Amps

Inrush Rating —
A-400B, A-400D, A400DB-1 — 1,200 Amps
A-400A, A-400AA, A-400L and A-400S — 1,500 Amps

Rupture Rating — 4,000 Amps

General Characteristics

Temperature Range — -55°C to +71°C

Operating Cycles (Life) at Rated Resistive Load, Min. — 50,000 cycles

Operating Cycles (Life) Mechanical, Min. — 100,000 cycles

Dielectric Strength —
All Circuits to Ground — 1,250 Vrms
Circuit to Circuit — 1,250 Vrms
Coil to Ground and Aux. Contacts — 1,000 Vrms

Altitude, Max. — 50,000 ft.

Weight — 1.26 to 1.48 lbs

Coil Characteristics

Duty Cycle — Intermittent with Suppression, or Continuous with Suppression

Operating Voltage, Nom. —
A-400A, A-400AA, A-400B, A-400D, A400DB-1, A-400DC, A-400G, A-400G-2, A-400L, A-400S — 28 Vdc

Operating Voltage, Max. —
A-400A, A-400AA, A-400B, A-400D, A400DB-1, A-400L, A-400S — 30 Vdc
A-400G, A-400G-2 — 31 Vdc
A-400DC — 32 Vdc

Pickup Voltage, Max. —
A-400A, A-400AA, A-400L — 14 Vdc
A-400B, A-400D, A400DB-1 — 18 Vdc
A-400DC — Normal — 14 Vdc
High Temp. — 18 Vdc
A-400G — Normal — 15 Vdc
High Temp. — 19 Vdc
A-400G-2 — Normal — 10 Vdc
High Temp. — 12.5 Vdc
A-400S — +X to -X2 — 18 Vdc
+Y1 to -Y2 — 13 Vdc

Dropout Voltage —
A-400L — 0.5 to 4 Vdc
A-400A, A-400AA, — 1 to 5 Vdc
A-400B, A-400D, A400DB-1 — 1 to 7 Vdc
A-400DC, A-400G, A-400G-2 — 1.0 Vdc Min.
A-400S — +X to -X2 — 1 to 7 Vdc
+Y1 to -Y2 — 0.5 to 5 Vdc

For factory-direct application assistance, phone 419-521-9500 or fax 419-526-2749.

Catalog 5-1773450-5
Revised 3-13

www.te.com

Dimensions are shown for reference purposes only. Specifications subject to change.

Dimensions are in millimeters unless otherwise specified.

USA: +1 800 522 6752
Asia Pacific: +86 0 400 820 6015
UK: +44 800 267 666

For additional support numbers please visit www.te.com

A-400 Series, Rated up to 400 Amps, 28 Vdc (Continued)

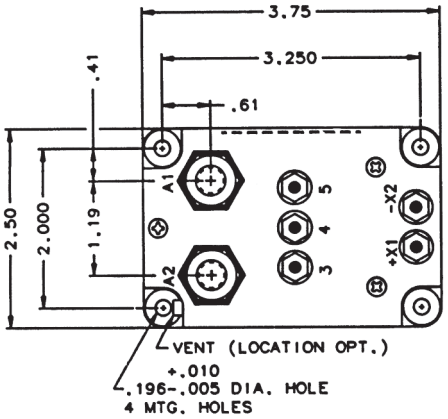

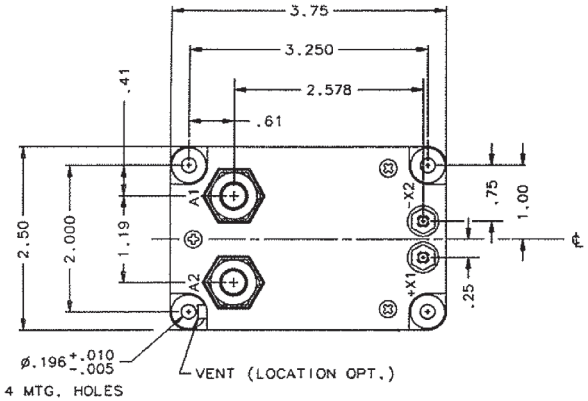

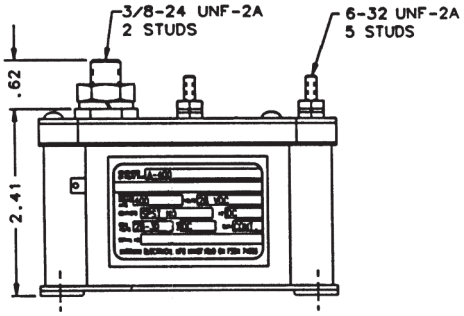

Mounting Style A

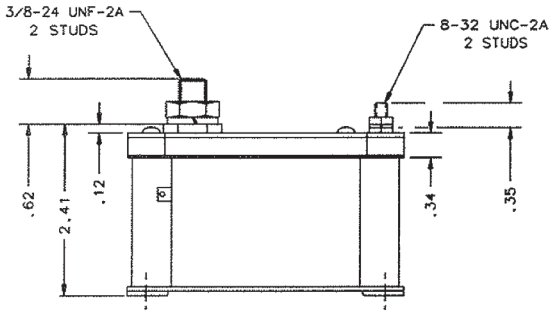

Mounting Style B

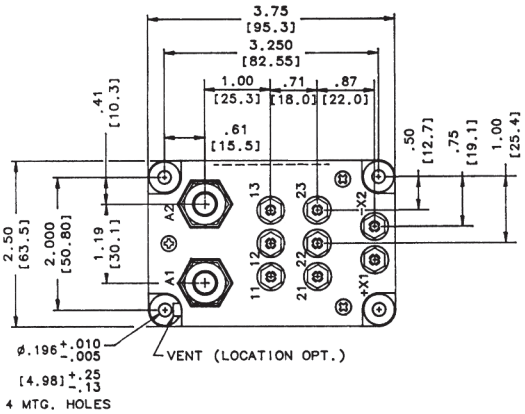

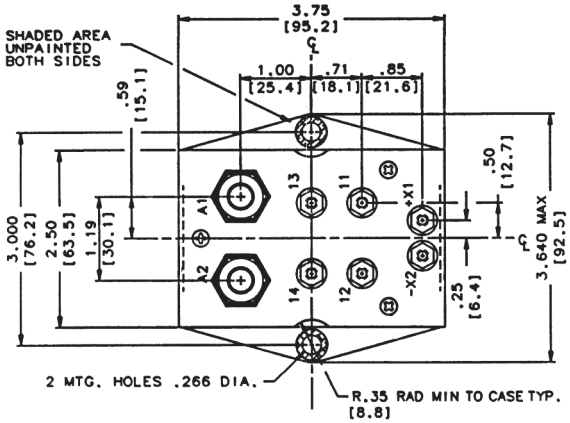

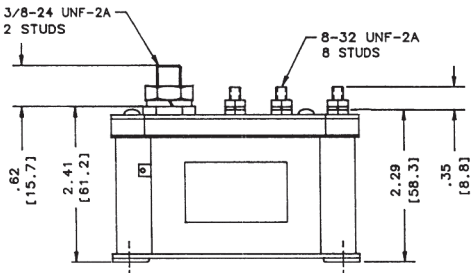

Mounting Style C

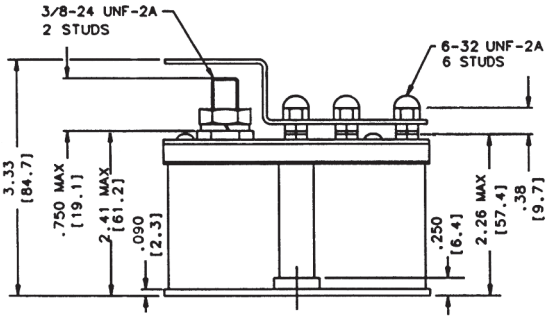

Mounting Style D

For factory-direct application assistance, phone 419-521-9500 or fax 419-526-2749.

Dimensions are shown for reference purposes only. Specifications subject to change.

Dimensions are in millimeters unless otherwise specified.

USA: +1 800 522 6752
Asia Pacific: +86 0 400 820 6015
UK: +44 800 267 666

For additional support numbers please visit www.te.com

A-400 Series, Rated up to 400 Amps, 28 Vdc (Continued)

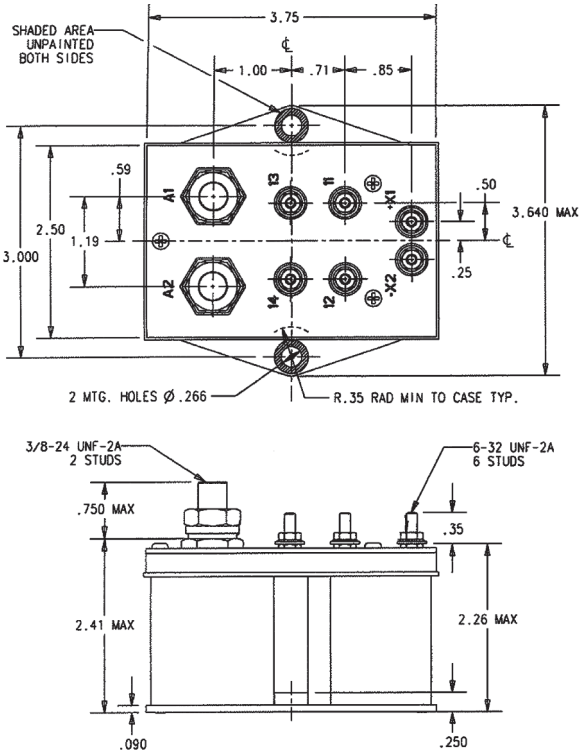

Mounting Style E

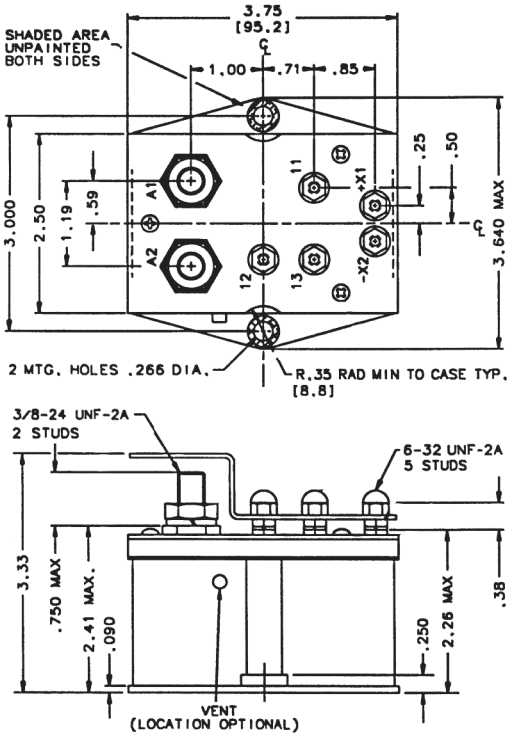

Mounting Style F

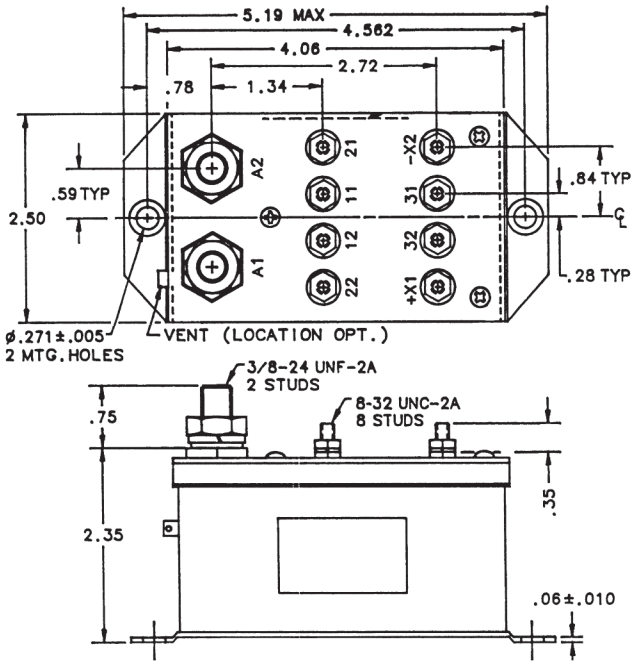

Mounting Style G

For factory-direct application assistance, phone 419-521-9500 or fax 419-526-2749.

Dimensions are shown for reference purposes only. Specifications subject to change.

Dimensions are in millimeters unless otherwise specified.

USA: +1 800 522 6752
Asia Pacific: +86 0 400 820 6015
UK: +44 800 267 666

For additional support numbers please visit www.te.com

A-400 Series, Rated up to 400 Amps, 28 Vdc (Continued)

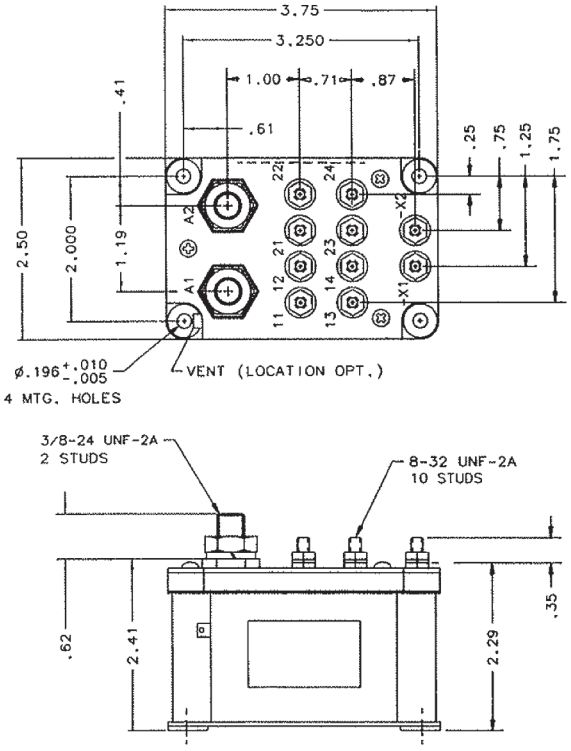

Mounting Style I

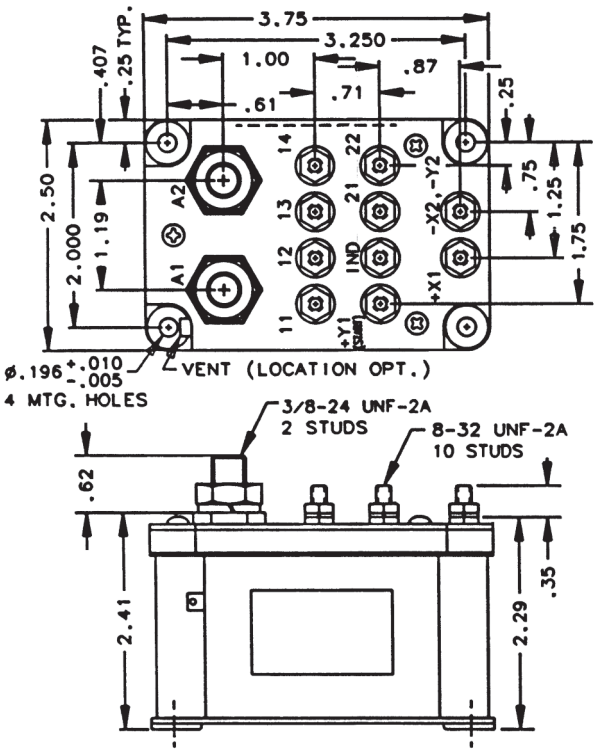

Mounting Style J

For factory-direct application assistance, phone 419-521-9500 or fax 419-526-2749.

Dimensions are shown for reference purposes only. Specifications subject to change.

Dimensions are in millimeters unless otherwise specified.

USA: +1 800 522 6752
Asia Pacific: +86 0 400 820 6015
UK: +44 800 267 666

For additional support numbers please visit www.te.com

A-400 Series, Rated up to 400 Amps, 28 Vdc (Continued)

Circuit Configurations (Consult factory for other available circuit configurations)

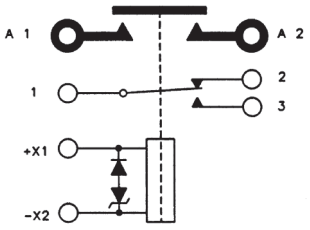

Circuit Configuration 1

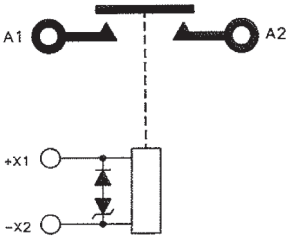

Circuit Configuration 2

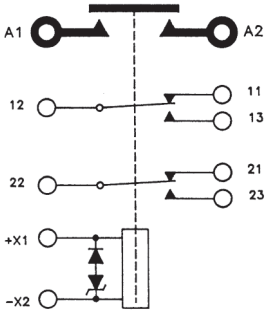

Circuit Configuration 3

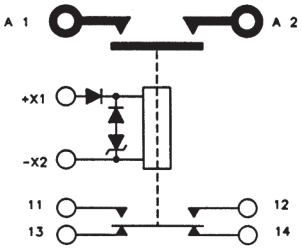

Circuit Configuration 4

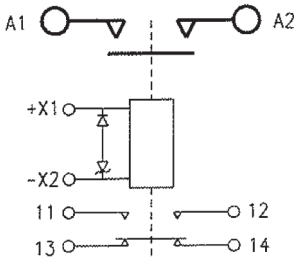

Circuit Configuration 5

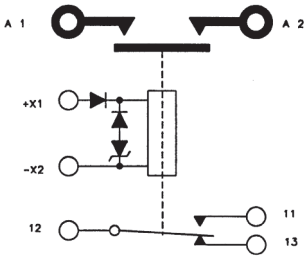

Circuit Configuration 6

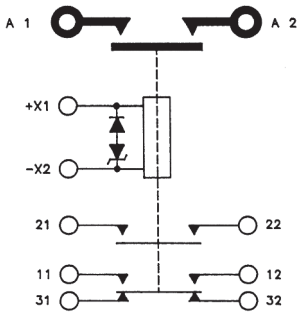

Circuit Configuration 7

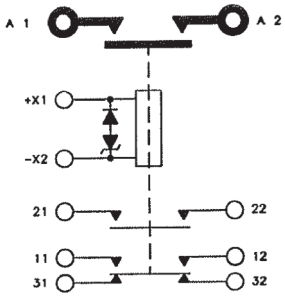

Circuit Configuration 8

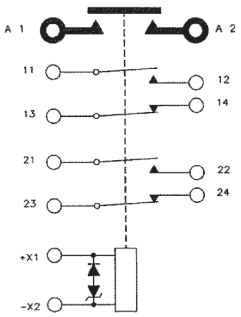

Circuit Configuration 9

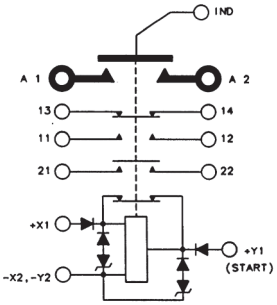

Circuit Configuration 10

HARTMAN Part Number	Construction Type	Mounting Style	Coil Type	Circuit Config.	TE Part Number
A-400A	Gasket/Vented	A	Intermittent	1	1-1616530-6
A-400AA	Gasket/Vented	B	Intermittent	2	1616056-2
A-400B	Gasket/Vented	C	Continuous	3	1616056-4
A-400D	Environ.	D	Continuous	4	1616056-5
A-400DB1	Environ.	E	Continuous	5	1-1616964-3
A-400DC	Gasket/Vented	F	Continuous	6	1616056-6
A-400G	Gasket/Vented	G	Intermittent	7	1616056-8
A-400G2	Gasket/Vented	G	Intermittent	8	6-1616949-1
A-400L	Gasket/Vented	I	Intermittent	9	1-1616530-5
A-400S	Gasket/Vented	J	Continuous/ Intermittent	10	1616056-9

For factory-direct application assistance, phone 419-521-9500 or fax 419-526-2749.

Catalog 5-1773450-5
Revised 3-13

www.te.com

Dimensions are shown for reference purposes only. Specifications subject to change.

Dimensions are in millimeters unless otherwise specified.

USA: +1 800 522 6752
Asia Pacific: +86 0 400 820 6015
UK: +44 800 267 666

For additional support numbers please visit www.te.com

A-703 and AH-703 Series, Rated up to 400 Amps, 28 Vdc*

Product Facts

- **SPST NO, Double break**
- **Gasket sealed or Hermetically sealed**
- **Auxiliary contacts available**
- **Meets many requirements of MIL-PRF-6106**

Performance Data

Electrical Characteristics

Contact Arrangement — SPST NO, Double Break

Rated Operating Voltage — 28 Vdc* Except for A-703CSM which is 36/40 Vdc

Resistive Rating — 400 Amps

Resistive for 30 sec — 1,000 Amps

Inrush Rating — 1,500 Amps

General Characteristics

Temperature Range — -55°C to +71°C

Operating Cycles (Life) at Rated Resistive Load, Min. — 50,000 cycles

Operating Cycles (Life) Mechanical, Min. — 100,000 cycles

Dielectric Strength —
All Circuits to Ground — 1,250 Vrms
Circuit to Circuit — 1,250 Vrms
Coil to Ground and Aux. Contacts — 1,000 Vrms

Weight — 2.12 to 2.88 lbs

Pickup Time, @ Nom. Voltage, Max. — 35 msec

Dropout Time, @ Nom. Voltage, Max. — 35 msec

Bounce Time, @ Nom. Voltage, Max. — .004 msec

Coil Characteristics

Duty Cycle — Intermittent (Type A, See diagram below), Intermittent with suppression (Type B, See diagram below), Continuous, economized (Type C, See diagram below) or Continuous, economized with suppression (Type D, See diagram below)

Operating Voltage — 28 Vdc Nominal

Pickup Voltage @ 25°C, Max. —
A-703B — 8 Vdc
A-703DBH — 10 Vdc
A-703, A-703CD, A-703CSM, A-703D, A-703FA, A-703FB, A-703FSS, A-703ZS — 12 Vdc
A-703T — 13 Vdc
AH-703F, A-703E, A-703G-1, A-703GC, A-703GS, A-703R, AH-703F — 16 Vdc

Dropout Voltage —
A-703B — 0.5 to 3 Vdc
A-703CD, A-703FA, A-703FB — 0.5 to 5 Vdc
A-703T — 0.5 to 6 Vdc
A-703, A-703CSM, A-703D, A-703FSS, A-703ZS — 0.5 to 7 Vdc
A-703DBH, A-703E, A-703R — 1.0 to 7 Vdc
AH-703F, A-703G-1, A-703GC, A-703GS, AH-703F — 1.5 to 7 Vdc

For factory-direct application assistance, phone 419-521-9500 or fax 419-526-2749.

Catalog 5-1773450-5
Revised 3-13

www.te.com

Dimensions are shown for reference purposes only. Specifications subject to change.

Dimensions are in millimeters unless otherwise specified.

USA: +1 800 522 6752
Asia Pacific: +86 0 400 820 6015
UK: +44 800 267 666

For additional support numbers please visit www.te.com

A-703 and AH-703 Series, Rated up to 400 Amps, 28 Vdc (Continued)

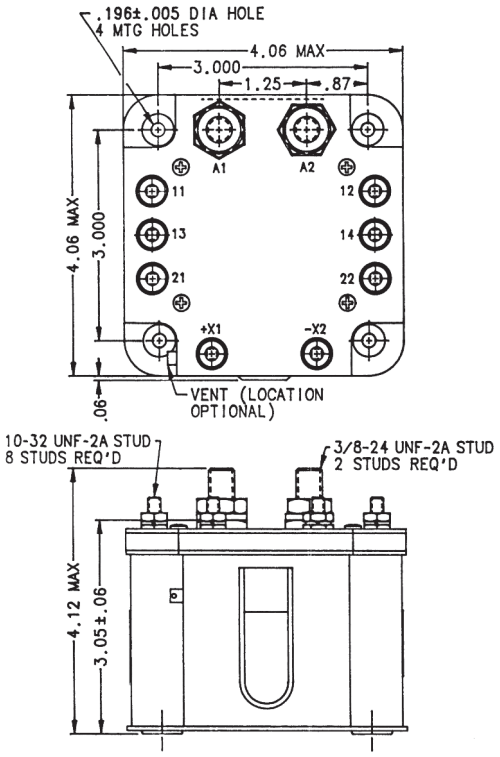

Mounting Style A

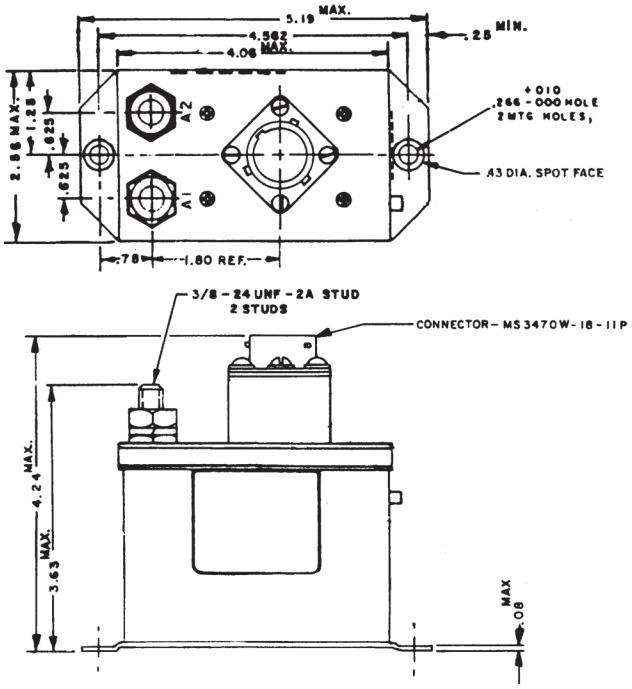

Mounting Style B

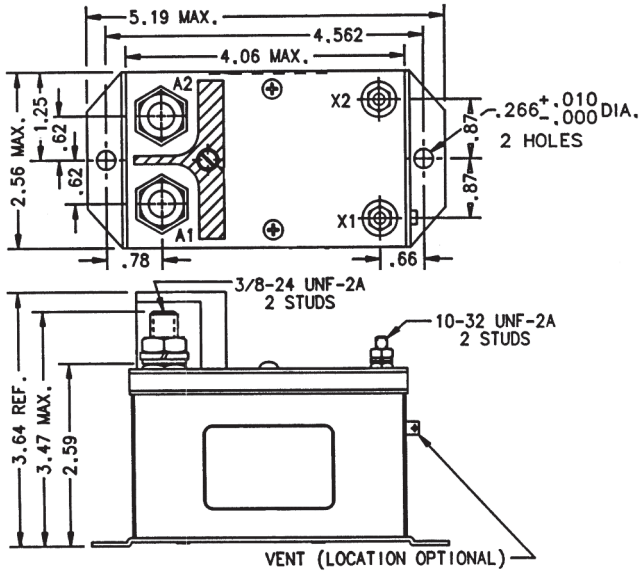

Mounting Style C

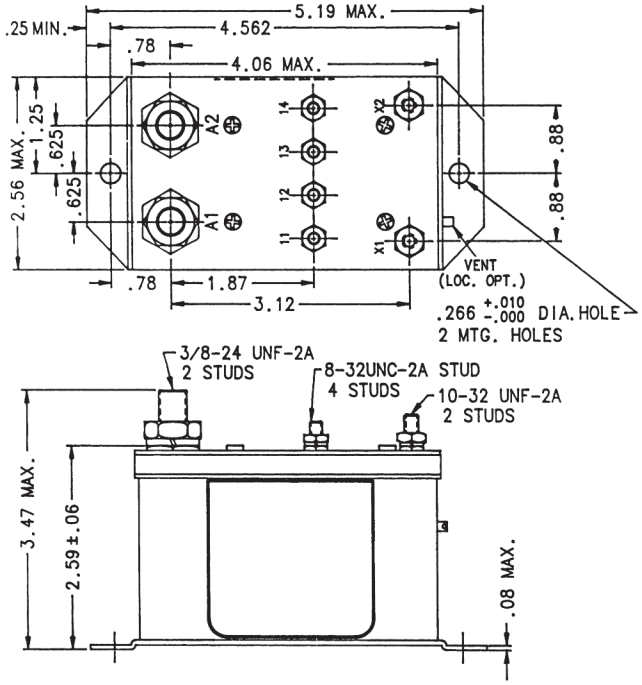

Mounting Style D

For factory-direct application assistance, phone 419-521-9500 or fax 419-526-2749.

Catalog 5-1773450-5
Revised 3-13

www.te.com

Dimensions are shown for reference purposes only. Specifications subject to change.

Dimensions are in millimeters unless otherwise specified.

USA: +1 800 522 6752
Asia Pacific: +86 0 400 820 6015
UK: +44 800 267 666

For additional support numbers please visit www.te.com

A-703 and AH-703 Series, Rated up to 400 Amps, 28 Vdc (Continued)

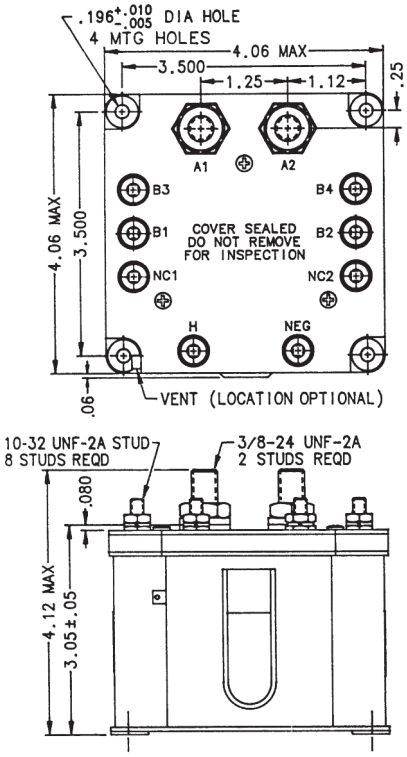

Mounting Style E

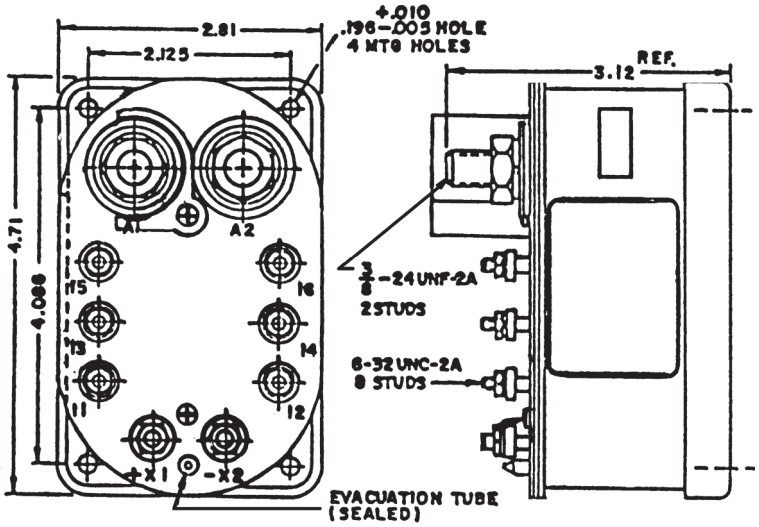

Mounting Style F

For factory-direct application assistance, phone 419-521-9500 or fax 419-526-2749.

Dimensions are shown for reference purposes only. Specifications subject to change.

Dimensions are in millimeters unless otherwise specified.

USA: +1 800 522 6752
Asia Pacific: +86 0 400 820 6015
UK: +44 800 267 666

For additional support numbers please visit www.te.com

A-703 and AH-703 Series, Rated up to 400 Amps, 28 Vdc (Continued)

Circuit Configurations (Consult factory for other available circuit configurations)

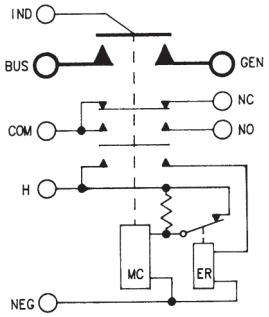

Circuit Configuration 1

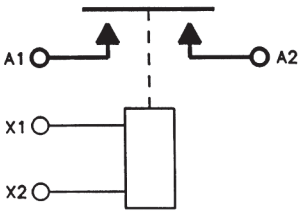

Circuit Configuration 2

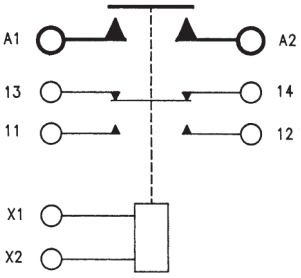

Circuit Configuration 3

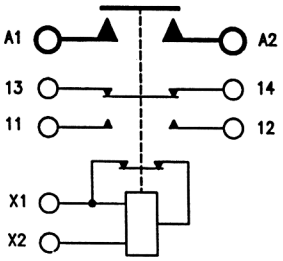

Circuit Configuration 4

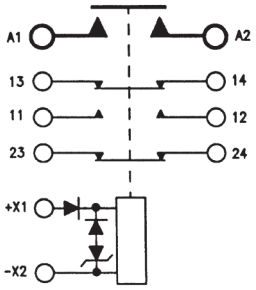

Circuit Configuration 5

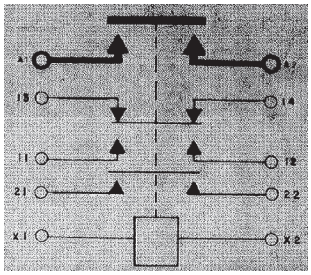

Circuit Configuration 6

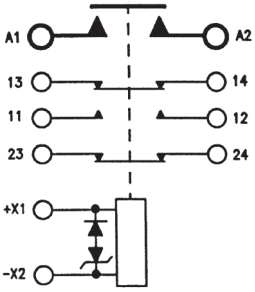

Circuit Configuration 7

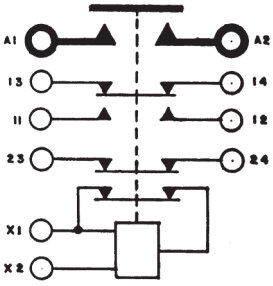

Circuit Configuration 8

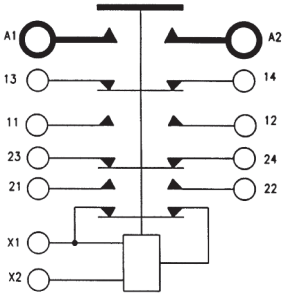

Circuit Configuration 9

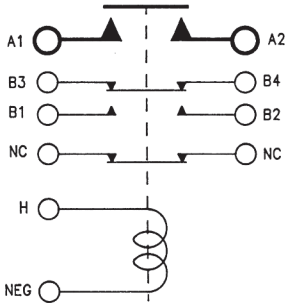

Circuit Configuration 10

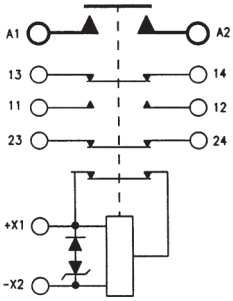

Circuit Configuration 11

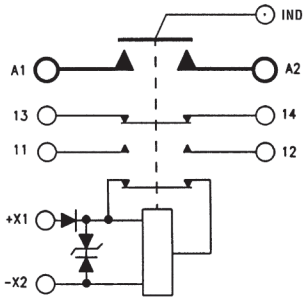

Circuit Configuration 12

For factory-direct application assistance, phone 419-521-9500 or fax 419-526-2749.

Catalog 5-1773450-5
Revised 3-13

www.te.com

Dimensions are shown for reference purposes only. Specifications subject to change.

Dimensions are in millimeters unless otherwise specified.

USA: +1 800 522 6752
Asia Pacific: +86 0 400 820 6015
UK: +44 800 267 666

For additional support numbers please visit www.te.com

A-703 and AH-703 Series, Rated up to 400 Amps, 28 Vdc (Continued)

Circuit Configurations (Consult factory for other available circuit configurations)

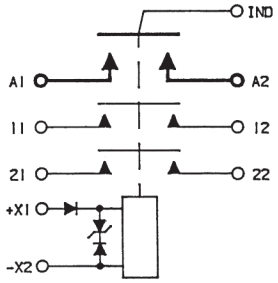

Circuit Configuration 13

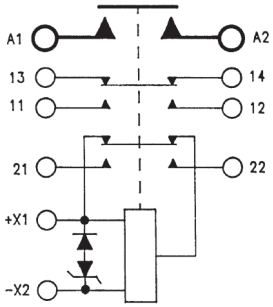

Circuit Configuration 14

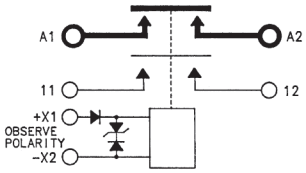

Circuit Configuration 15

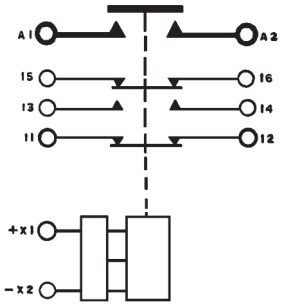

Circuit Configuration 16

HARTMAN Part Number	Construction Type	Mounting Style	Coil Type	Circuit Config.	TE Part Number
A-703	Gasket/Vented	A	Continuous, Economized	1	1616058-1
A-703CD	Gasket/Vented	C	Intermittent	2	1616058-6
A-703CSM	Gasket/Vented	D	Intermittent	15	1616058-7
A-703D	Gasket/Vented	D	Intermittent	3	1616058-8
A-703DBH	Gasket/Vented	D	Intermittent	3	1-1616058-0
A-703E	Gasket/Vented	D	Continuous, Economized	4	1-1616058-1
A-703FA	Gasket/Vented	D	Intermittent w/Supp.	5	1-1616058-2
A-703FB	Gasket/Vented	D	Intermittent	6	1-1616058-3
A-703FSS	Gasket/Vented	D	Intermittent w/Supp.	7	1-1616058-4
A-703G-1	Gasket/Vented	D	Continuous, Economized	8	1-1616058-5
A-703GC	Gasket/Vented	D	Continuous, Economized	19	1-1616058-6
A-703B	Gasket/Vented	E	Intermittent	10	1616058-3
A-703GS	Gasket/Vented	D	Continuous, Economized w/Supp.	11	1-1616058-7
A-703R	Gasket/Vented	D	Continuous, Economized w/Supp.	12	1-1616058-9
A-703T	Gasket/Vented	D	Intermittent w/Supp.	13	2-1616058-0
A-703ZS	Gasket/Vented	A	Continuous, Economized w/Supp.	14	2-1616058-2
AH-703F	Hermetically Sealed	F	Continuous, Economized w/Supp.	16	1616061-1

For factory-direct application assistance, phone 419-521-9500 or fax 419-526-2749.

Dimensions are shown for reference purposes only. Specifications subject to change.

Dimensions are in millimeters unless otherwise specified.

USA: +1 800 522 6752
Asia Pacific: +86 0 400 820 6015
UK: +44 800 267 666

For additional support numbers please visit www.te.com

A-981 Series, Rated up to 400 Amps, 28 Vdc

Product Facts

- **SPDT, Double break or SPST NO, SPST NC**
- **Gasket sealed**
- **Auxiliary contacts available**
- **Meets many requirements of MIL-PRF-6106**

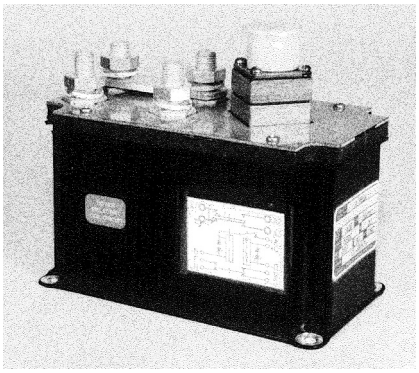

Performance Data

Electrical Characteristics

Contact Arrangement — SPDT, Double Break or SPST NO, SPST NC

Rated Operating Voltage — 28 Vdc

Resistive Rating — 400 Amps

Inrush for 30 sec — 1,000 Amps

Inrush — 1,500 Amps

General Characteristics

Temperature Range — -55°C to +71°C

Operating Cycles (Life) at Rated Resistive Load, Min. — 50,000 cycles

Operating Cycles (Life) Mechanical, Min. — 100,000 cycles

Dielectric Strength —
All Circuits to Ground — 1,250 Vrms
Circuit to Circuit — 1,250 Vrms
Coil to Ground and Aux. Contacts — 1,000 Vrms

Weight, Max. — 3.2 lbs

Coil Characteristics

Duty Cycle —Continuous with suppression

Operating Voltage, Max. — 31 Vdc

Operating Voltage, Min. — 17 Vdc

Pickup Voltage, Max. — 18 Vdc

Dropout Voltage @ 25°C — 1 to 10 Volts

Coil Current, Inrush, Max. — 4.5 Amp

For factory-direct application assistance, phone 419-521-9500 or fax 419-526-2749.

Catalog 5-1773450-5
Revised 3-13

www.te.com

Dimensions are shown for reference purposes only. Specifications subject to change.

Dimensions are in millimeters unless otherwise specified.

USA: +1 800 522 6752
Asia Pacific: +86 0 400 820 6015
UK: +44 800 267 666

For additional support numbers please visit www.te.com

A-981 Series, Rated up to 400 Amps, 28 Vdc (Continued)

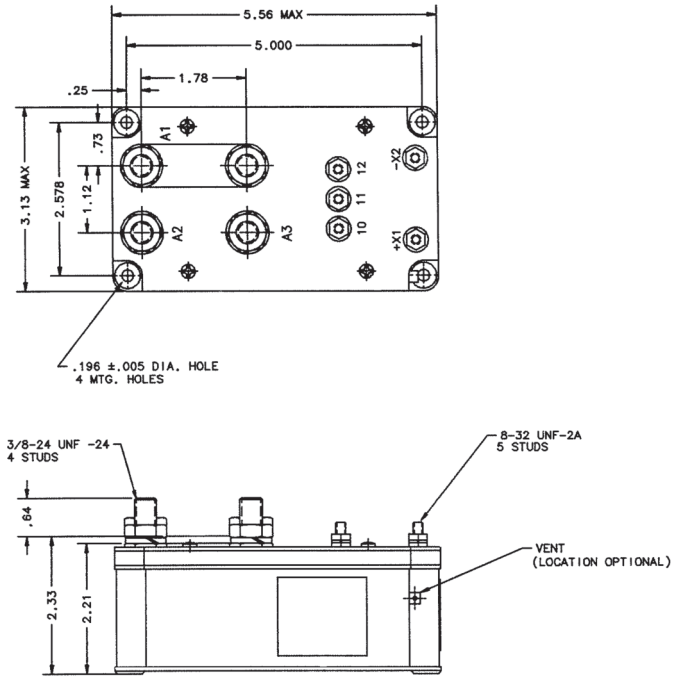

Mounting Style A

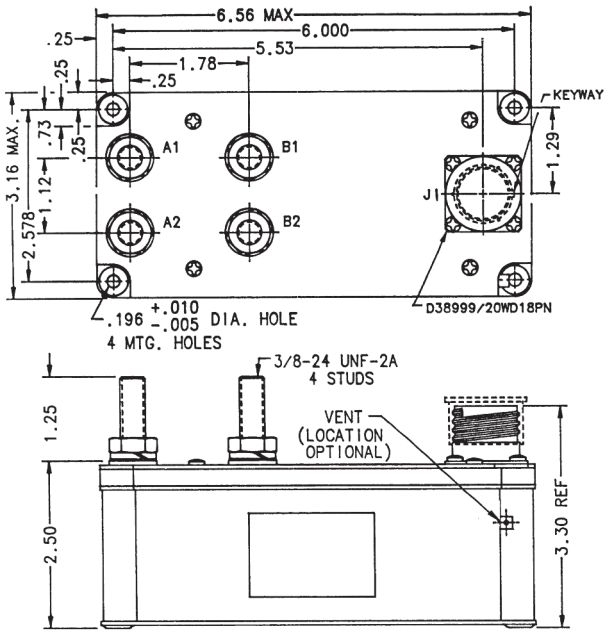

Mounting Style B

Circuit Configurations (Consult factory for other available circuit configurations)

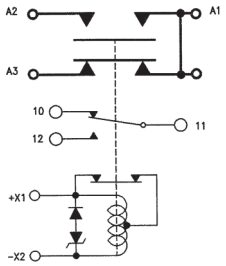

Circuit Configuration 1

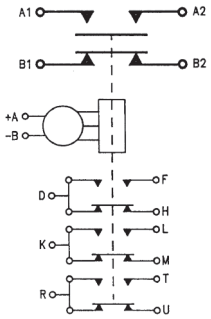

Circuit Configuration 2

HARTMAN Part Number	Construction Type	Mounting Style	Coil Type	Circuit Config.	TE Part Number
A-981S	Gasket/Vented	A	Continuous, Economizing w/Supp.	1	1616083-7
A-981P	Gasket/Vented	B	Continuous, Economizing w/Supp.	2	1616083-6

For factory-direct application assistance, phone 419-521-9500 or fax 419-526-2749.

Dimensions are shown for reference purposes only. Specifications subject to change.

Dimensions are in millimeters unless otherwise specified.

USA: +1 800 522 6752
Asia Pacific: +86 0 400 820 6015
UK: +44 800 267 666

For additional support numbers please visit www.te.com

A-792 Series, Rated up to 500 Amps, 50 Vdc

Product Facts

- **SPST NO, Quad. break**
- **Gasket sealed**
- **Auxiliary contacts available**
- **Meets many requirements of MIL-PRF-6106**

Performance Data

Electrical Characteristics

Main Contacts —

Contact Arrangement — SPST NO, Quad. Break

Rated Operating Voltage — 50 Vdc

Resistive Rating — 500 Amps

Auxiliary Contacts —

Aux. Contact Arrangement — SPDT, SPST NC

Rated Operating Voltage — 38 Vdc

Resistive Rating — 5 Amps

General Characteristics

Temperature Range — -55°C to +71°C

Operating Cycles (Life) at Rated Resistive Load — 50,000 cycles

Operating Cycles (Life) Mechanical — 100,000 cycles

Weight, Max. — 4 lb 8 oz.

Coil Characteristics

Duty Cycle — Continuous, economizing

Operating Voltage, Nom. — 35-39 Vdc

Pickup Voltage @ 25°C, Max. — 20 V

Resistance @ 25°C —
Pickup — 27 Ohm ± 20%
Hold — 111 Ohm ± 20%

Suppression, Peak, Max. — 50 V

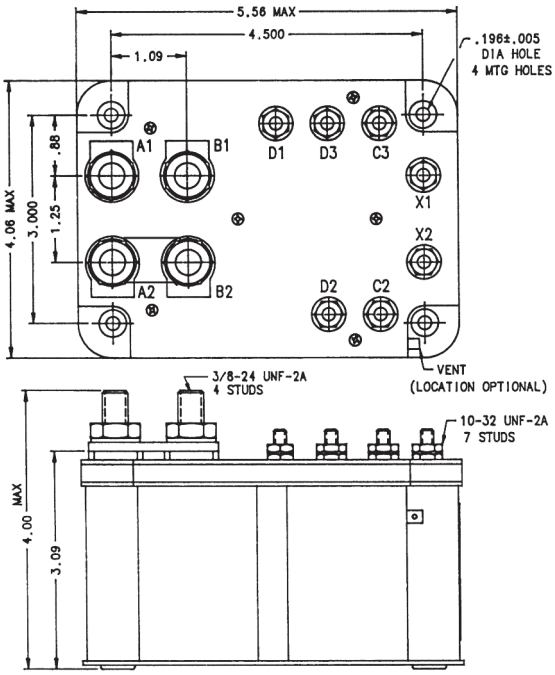

Mounting Style A

Circuit Configurations (Consult factory for other available circuit configurations)

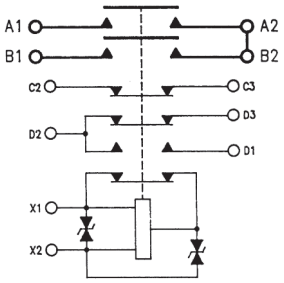

Circuit Configuration 1

HARTMAN Part Number	Construction Type	Mounting Style	Coil Type	Circuit Config.	TE Part Number
A-792SFS	Gasket/Vented	A	Continuous, Economizing w/Supp.	1	1616101-2

For factory-direct application assistance, phone 419-521-9500 or fax 419-526-2749.

Catalog 5-1773450-5
Revised 3-13

www.te.com

Dimensions are shown for reference purposes only. Specifications subject to change.

Dimensions are in millimeters unless otherwise specified.

USA: +1 800 522 6752
Asia Pacific: +86 0 400 820 6015
UK: +44 800 267 666

For additional support numbers please visit www.te.com

A-712 Series, Rated up to 600 Amps, 28 Vdc

Product Facts

- **SPST NO, Double break**
- **Gasket sealed**
- **Meets requirements of MIL-PRF-6106**

Performance Data

Electrical Characteristics

Contact Arrangement — SPST NO, Double Break

Rated Operating Voltage — 28 Vdc

Resistive Rating — 600 Amps

General Characteristics

Temperature Range — -55°C to +71°C

Operating Cycles (Life) at Rated Resistive Load — 50,000 cycles

Operating Cycles (Life) Mechanical — 100,000 cycles

Dielectric Strength —
All Circuits to Ground — 1,250 Vrms
Circuit to Circuit — 1,250 Vrms
Coil to Ground and Aux. Contacts — 1,000 Vrms

Weight, Max. — 3.00 lbs - 3 lbs 7 oz.

Coil Characteristics

Duty Cycle — Continuous or Intermittent

Operating Voltage, Max. — 29 Vdc

Coil Voltage, Nom. — 24-28 Vdc

Pickup Voltage, Max. — 18 Vdc

Dropout Voltage — 1 to 5 Vdc

Coil Current, Hold, Max. — 0.6 Amp

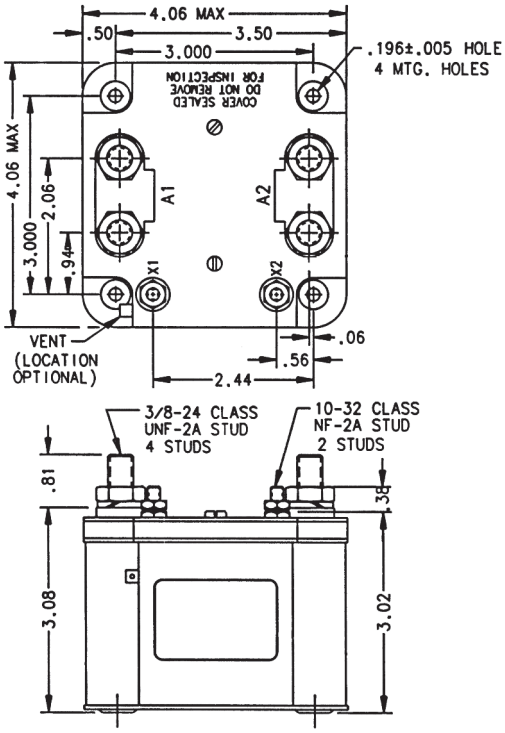

Mounting Style A

For factory-direct application assistance, phone 419-521-9500 or fax 419-526-2749.

Catalog 5-1773450-5
Revised 3-13

www.te.com

Dimensions are shown for reference purposes only. Specifications subject to change.

Dimensions are in millimeters unless otherwise specified.

USA: +1 800 522 6752
Asia Pacific: +86 0 400 820 6015
UK: +44 800 267 666

For additional support numbers please visit www.te.com

A-712 Series, Rated up to 600 Amps, 28 Vdc (Continued)

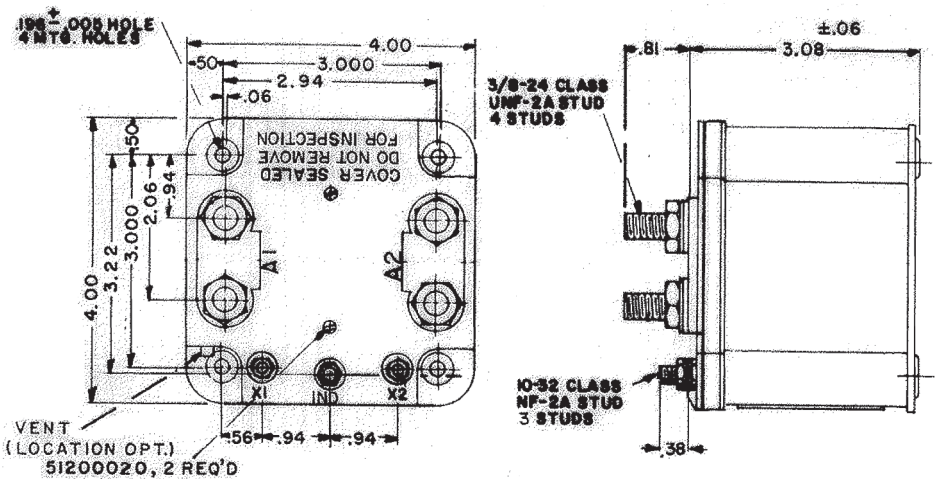

Mounting Style B

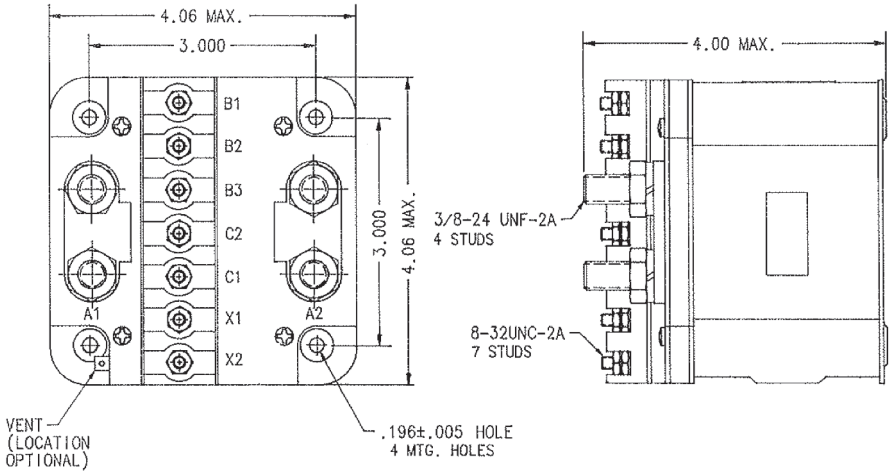

Mounting Style C

Circuit Configurations (Consult factory for other available circuit configurations)

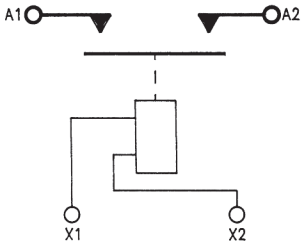

Circuit Configuration 1

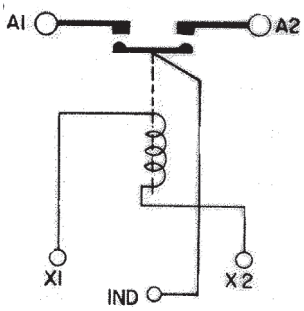

Circuit Configuration 2

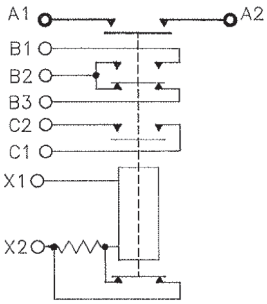

Circuit Configuration 3

HARTMAN Part Number	Construction Type	Mounting Style	Coil Type	Circuit Config.	TE Part Number
A-712AB	Gasket/Vented	A	Continuous	1	2-1616058-3
A-712AF	Gasket/Vented	A	Intermittent	1	2-1616058-4
A-712J	Gasket/Vented	B	Continuous	2	2-1616058-6
A-712W	Gasket/Vented	C	Continuous, Economizing	3	6-1616032-3

For factory-direct application assistance, phone 419-521-9500 or fax 419-526-2749.

Catalog 5-1773450-5
Revised 3-13

www.te.com

Dimensions are shown for reference purposes only. Specifications subject to change.

Dimensions are in millimeters unless otherwise specified.

USA: +1 800 522 6752
Asia Pacific: +86 0 400 820 6015
UK: +44 800 267 666

For additional support numbers please visit www.te.com

A-882 Series, Rated up to 600 Amps, 28/48 Vdc

Product Facts

- **2PDT, Double break**
- **Gasket sealed**
- **Auxiliary contacts available**
- **Meets many requirements of MIL-PRF-6106**

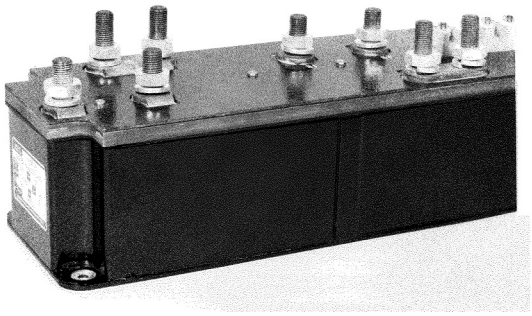

Performance Data

Electrical Characteristics

Main Contacts —

Contact Arrangement — 2PDT, Double Break

Rated Operating Voltage — 28/48 Vdc

Resistive Rating — 600 Amps

Resistive for 30 sec — 1,000 Amps

Motor Rating — 1,500 Amps, Inrush only

Auxiliary Contacts —

Aux. Contact Arrangement — SPST NO

Resistive Rating — 5 Amps

Inductive Rating — 5 Amps

General Characteristics

Temperature Range — -65°C to +160°C

Operating Cycles (Life) at Rated Resistive Load, Min. — 50,000 cycles

Operating Cycles (Life) Mechanical, Min. — 100,000 cycles

Dielectric Strength —
All Circuits to Ground — 1,250 Vrms
Circuit to Circuit — 1,250 Vrms
Coil to Ground and Aux. Contacts — 1,000 Vrms

Altitude, Max. — 50,000 ft

Weight — 8.75 lbs

Coil Characteristics

Duty Cycle — Intermittent

Operating Voltage, Max. — 29 Vdc

Operating Voltage, Min. — 18 Vdc

Pickup Voltage, Max., Hot — 18 Vdc

Dropout Voltage, Max., Hot — 7 Vdc

Coil Current, Max. @ 70°F — 8 Amps

Coil Current, Max. @ -65°F — 9.6 Amps

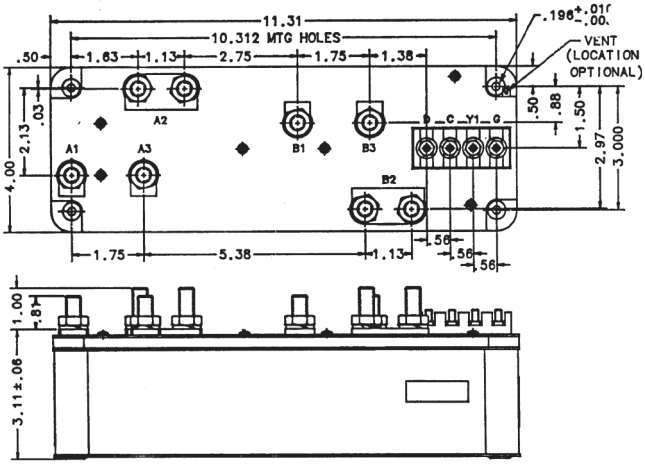

Mounting Style A

Circuit Configurations (Consult factory for other available circuit configurations)

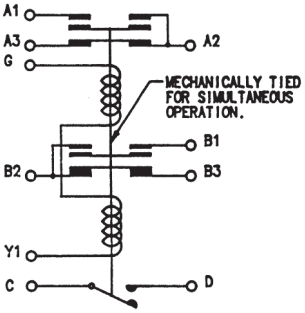

Circuit Configuration 1

HARTMAN Part Number	Construction Type	Mounting Style	Coil Type	Circuit Config.	TE Part Number
A-882DL	Gasket/Vented	A	Intermittent	1	1616102-6

For factory-direct application assistance, phone 419-521-9500 or fax 419-526-2749.

Catalog 5-1773450-5
Revised 3-13

www.te.com

Dimensions are shown for reference purposes only. Specifications subject to change.

Dimensions are in millimeters unless otherwise specified.

USA: +1 800 522 6752
Asia Pacific: +86 0 400 820 6015
UK: +44 800 267 666

For additional support numbers please visit www.te.com

A-931 Series, Rated up to 600 Amps, 28 Vdc

Product Facts

- **SPST NC, Double break**
- **Gasket sealed**
- **Auxiliary contacts available**
- **Meets many requirements of MIL-PRF-6106**

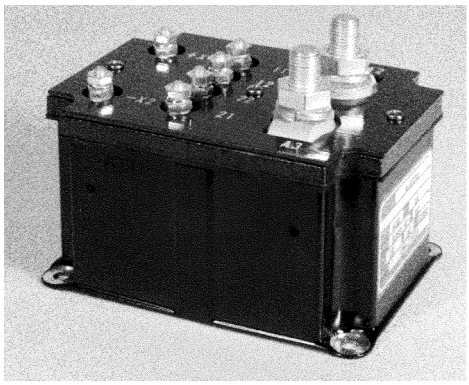

Performance Data

Electrical Characteristics

Main Contacts —

Contact Arrangement — SPST NC, Double Break

Rated Operating Voltage — 28 Vdc

Resistive Rating — 600 Amps

Inrush for 30 sec — 1,000 Amps

Inrush for 5 min — 800 Amps

Auxiliary Contacts —

Aux. Contact Arrangement — DPST

Rated Operating Voltage — 28 Vdc

Resistive Rating — 5 Amps

General Characteristics

Temperature Range — -55°C to +71°C

Operating Cycles (Life) at Rated Resistive Load, Min. — 50,000 cycles

Operating Cycles (Life) Mechanical, Min. — 100,000 cycles

Dielectric Strength —
All Circuits to Ground — 1,250 Vrms
Circuit to Circuit — 1,250 Vrms
Coil to Ground and Aux. Contacts — 1,000 Vrms

Weight, Max. — 3.00 lbs

Coil Characteristics

Duty Cycle — Continuous, economizing

Operating Voltage, Max. — 30 Vdc

Operating Voltage, Min. — 18 Vdc

Pickup Voltage, Initial, Max. @ 71°C — 10 Vdc

Dropout Voltage — 1 to 7 Vdc

Resistance, Inrush ± 20% @ 25°C — 3 Ohm

Resistance, Hold ± 20% @ 25°C — 80 Ohm

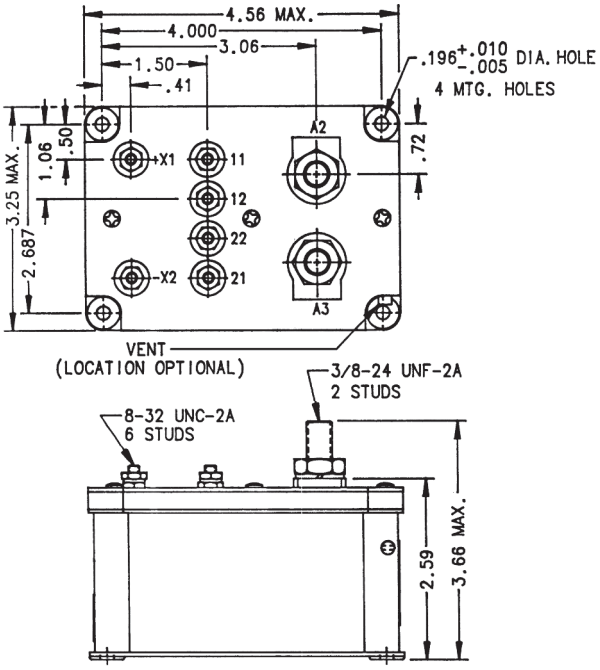

Mounting Style A

Circuit Configurations (Consult factory for other available circuit configurations)

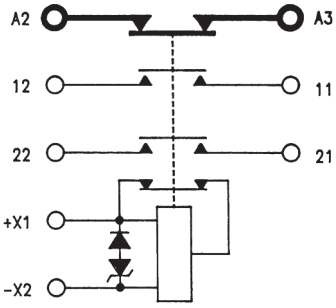

Circuit Configuration 1

HARTMAN Part Number	Construction Type	Mounting Style	Coil Type	Circuit Config.	TE Part Number
A-931F	Gasket/Vented	A	Continuous, Economizing w/Supp.	1	1616060-1

For factory-direct application assistance, phone 419-521-9500 or fax 419-526-2749.

Catalog 5-1773450-5
Revised 3-13

www.te.com

Dimensions are shown for reference purposes only. Specifications subject to change.

Dimensions are in millimeters unless otherwise specified.

USA: +1 800 522 6752
Asia Pacific: +86 0 400 820 6015
UK: +44 800 267 666

For additional support numbers please visit www.te.com

A-981 Series, Rated up to 600 Amps, 28/48 Vdc

Product Facts

- **SPDT, Double break or 1PST NO, 1PST NC**
- **Gasket sealed**
- **Auxiliary contacts available**
- **Meets many requirements of MIL-PRF-6106**

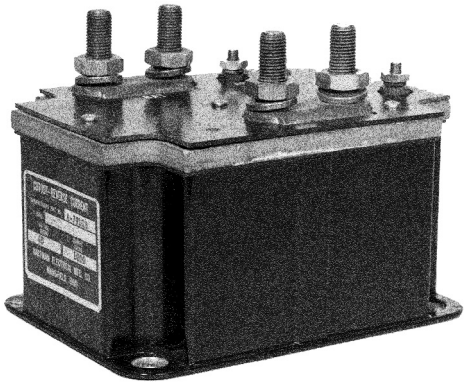

Performance Data

Electrical Characteristics

Contact Arrangement — SPST NC, Double Break or 1PST NO, 1PST NC

Rated Operating Voltage — 28 Vdc

Resistive Rating — 600 Amps

Inrush for 30 sec — 1,000 Amps

Motor Rating — 1,500 Amps, Inrush only

General Characteristics

Temperature Range — -55°C to +71°C

Operating Cycles (Life) at Rated Resistive Load, Min. — 50,000 cycles

Operating Cycles (Life) Mechanical, Min. — 100,000 cycles

Weight, Max. —
A-981E — 4 lbs 5 oz
A-981K — 4.5 lbs

Coil Characteristics

Duty Cycle —
A-981E — Continuous
A-981K — Continuous, economizing

Operating Voltage —
A-981E — 28 Vdc
A-981K — 24 Vdc min. to 30 Vdc max.

Pickup Voltage —
A-981E — 18 Vdc max. hot
A-981K — 16 Vdc max. initial @ 25°C

Dropout Voltage —
A-981E — 10 Vdc max. hot
A-981K — 1 to 10 Vdc

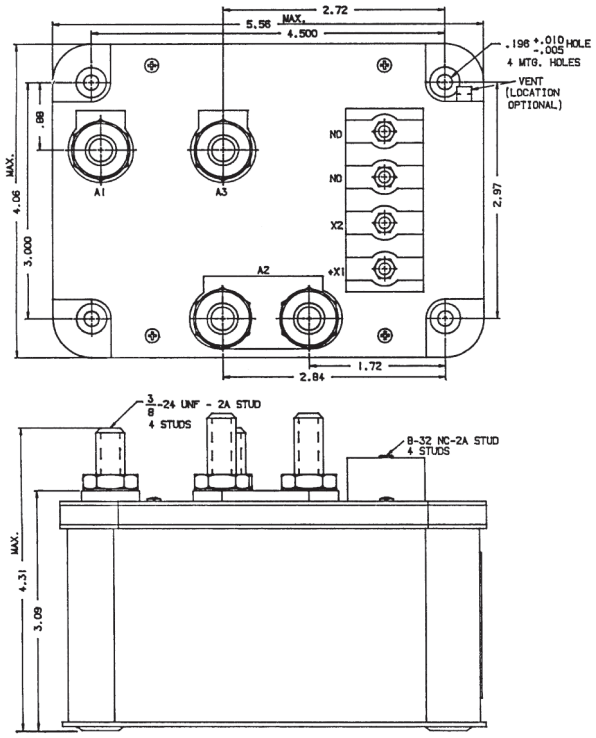

Mounting Style A

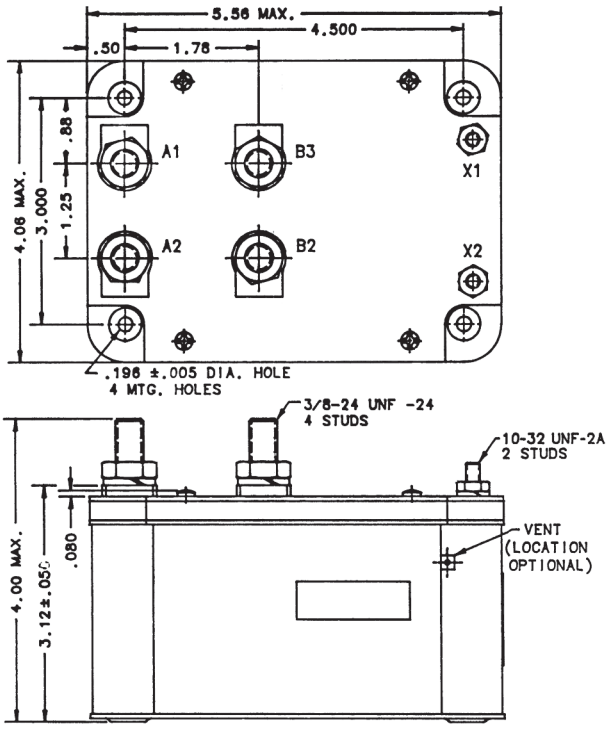

Mounting Style B

For factory-direct application assistance, phone 419-521-9500 or fax 419-526-2749.

Catalog 5-1773450-5
Revised 3-13

www.te.com

Dimensions are shown for reference purposes only. Specifications subject to change.

Dimensions are in millimeters unless otherwise specified.

USA: +1 800 522 6752
Asia Pacific: +86 0 400 820 6015
UK: +44 800 267 666

For additional support numbers please visit www.te.com

A-981 Series, Rated up to 600 Amps, 28/48 Vdc (Continued)

Circuit Configurations (Consult factory for other available circuit configurations)

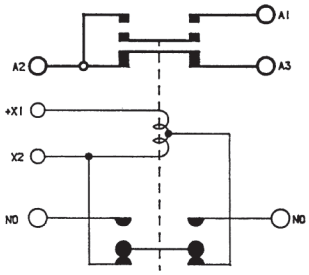

Circuit Configuration 1

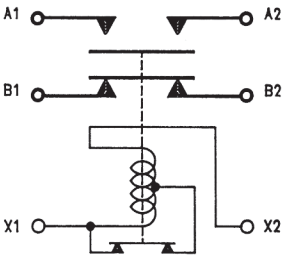

Circuit Configuration 2

HARTMAN Part Number	Construction Type	Mounting Style	Coil Type	Circuit Config.	TE Part Number
A-981E	Gasket/Vented	A	Continuous, Economizing	1	1616083-1
A-981K	Gasket/Vented	B	Continuous, Economizing	2	1616083-2

For factory-direct application assistance, phone 419-521-9500 or fax 419-526-2749.

Catalog 5-1773450-5
Revised 3-13

www.te.com

Dimensions are shown for reference purposes only. Specifications subject to change.

Dimensions are in millimeters unless otherwise specified.

USA: +1 800 522 6752
Asia Pacific: +86 0 400 820 6015
UK: +44 800 267 666

For additional support numbers please visit www.te.com

Cross Reference

Main Current Rating	AC/DC	Rating	Main Contact Config.	Operating Mode	Aux. Contact Config.	Coil Voltage (VDC)	Seal Type	Duty Cycle	Coil Trans. Voltage	Hartman Part No.	TE Part No.
25	DC	28	SPDT NO SPDT NC	Side Stable	–	30	Hermetic	Cont.	–	DH-14A	1616089-1
		28	SPDT NO SPDT NC	Side Stable	–	30	Hermetic	Cont.	–	DH-14AL	1616089-2
		28	SPDT NO SPDT NC	Side Stable	–	30	Hermetic	Cont.	42	DH-14AT	1616089-3
		3	SPDT NO S{DT NC	Side Stable	–	28	Hermetic	Intermittent	–	DH-21N	1616026-2
50	DC	28	SPST NO SPST NC	Side Stable	–	28	Gasket/Vented	Cont.	–	D-7AC	1616088-1
		28	SPST NO	Side Stable	DPDT	28	Gasket/Vented	Cont.	–	D-7LHB	1616064-1
		28	4PDT	Center Off	–	28	Hermetic	Cont.	–	DH-18DA	1616050-2
		28	SPST NO SPST NC	Side Stable	DPDT	18-30	Hermetic	Cont.	50	DH-7ATK	1616089-7
		28	2PST NO	Side Stable	–	28	Hermetic	Cont.	–	DH-7MN	1616103-2
		28	SPST NO SPST NC	Side Stable	(2)SPST NO	28	Hermetic	Cont.	–	DH-7TB	1-1616089-3
100	DC	28	SPST NO	Side Stable	SPDT	24-32	Gasket	Cont.	–	A-1077DD	1616055-3
		28	SPDT	Side Stable	1NO, 1NC	24-30	Gasket	Cont.	45	A-1077S	1616081-3
100	DC	28	SPDT	Center Off	SPST NO	115VAC	Gasket/Vented	Cont.	–	D-31BAA	1616097-1
		28	(2)SPST	Center Off	SPST NO	28	Gasket/Vented	Cont.	45	D-32A	1616097-2
		28	1PST NO 1PST NC	Side Stable	–	18-22.5	Hermetic	Cont.	–	DH-25EA	1616089-4
		28	SPDT	Center Off	SPST NO	28	Hermetic	Cont.	–	DHR-31BA	1616098-1
200	DC	28	SPST NO	Side Stable	DPDT	24-30	Gasket	Int.	–	A-1077D	1616055-2
		28	SPST NO	Side Stable	DPDT	24-30	Gasket	–	–	A-1077F	1616055-4
		28	SPST NO	Side Stable	–	24-30	Gasket	Cont.	–	A-1077G	1616055-5
		28	SPST NO	Side Stable	DPDT	24-30	Gasket	Cont.	–	A-1077V	1616055-6
		28	SPST NO	Side Stable	DPDT	24-30	Gasket	Cont.	–	A-1077W	1616081-4
200	DC	28	SPST NC	Side Stable	DPST NO	24-30	Gasket/Vented	Int.	–	A-876K	1616059-1
230	DC	28	SPDT	Side Stable	DPDT	24-30	Gasket	Cont.	–	A-1077B	1616081-1
300	DC	28	SPST NO	Side Stable	SPDT	28	Gasket/Vented	Cont.	–	A-770AM	3-1616058-1
		29	SPST NO	Side Stable	SPST NO	28	Gasket/Vented	Cont.	–	A-770N	3-1616058-3
		28	SPST NO	Side Stable	–	24	Gasket/Vented	Cont.	–	A-770RF	3-1616058-4
		28	SPST NO	Side Stable	Form Z	24-30	Gasket/Vented	Int.	–	A-770RG	3-1616058-5
		28	SPST NO	Side Stable	Form Z SPST NC	24-30	Gasket/Vented	Cont.	45	A-770RN	3-1616058-8
		28	SPST NO	Side Stable	Form Z SST NC	24-30	Gasket/Vented	Cont.	45	A-770RSS	3-1616058-9
		28	SPST NO	Side Stable	Form Z	16-32	Gasket/Vented	Int.	80	A-770RV	1616530-7
		28	SPST NO	Side Stable	SPDT	28	Gasket/Vented	Cont.	–	A-770W	4-1616058-1
		28	SPST NO	Side Stable	2PST NO	28	Gasket/Vented	Int.	42	A-700WA-2	4-1616058-2
		28	SPST NO	Side Stable	DPST NO SPS NC	28	Gasket/Vented	Int.	–	A-770WA-3	4-1616058-3
		28	SPST NO	Side Stable	3PDT	28	Gasket/Vented	Cont.	42	A-770WF	4-1616058-4
		28	SPST NO	Side Stable	SPDT	115 VAC	Gasket/Vented	Cont.	–	AR-770W	0-1616063-1

For factory-direct application assistance, phone 419-521-9500 or fax 419-526-2749.

Dimensions are shown for reference purposes only. Specifications subject to change.

Dimensions are in millimeters unless otherwise specified.

USA: +1 800 522 6752
Asia Pacific: +86 0 400 820 6015
UK: +44 800 267 666

For additional support numbers please visit www.te.com

Cross Reference (Continued)

Main Current Rating	AC/DC	Rating	Main Contact Config.	Operating Mode	Aux. Contact Config.	Coil Voltage (VDC)	Seal Type	Duty Cycle	Coil Trans. Voltage	Hartman Part No.	TE Part No.
300	DC	24/48	DPDT NC SPDT NO	Side Stable	SPST NO	24-30	Gasket/Vented	Int.	–	A-848KH	1616082-2
		24/48	DPST NC SPST NO	Side Stable	SPST NO	24-30	Gasket/Vented	Int.	–	A-848KH-2	1616082-4
		28	DPST NO	Side Stable	DPST NO DPST NC	28	Gasket/Vented	Cont.	45	A-848MAS	1616102-2
		28	DPST NO	Side Stable	3PST NC	24-30	Gasket/Vented	Cont. Econ.	50	A-848MLS	1616102-3
		28	DPST NO	Side Stable	3PST NC	24-30	Gasket/Vented	Cont. Econ.	50	A-848KLC	0-1616082-6
300	DC	30	SPDT	Side Stable	SPDT	30	Hermetic	Int.	–	AH-965H	1616084-1
		30	SPDT	Side Stable	3PDT	28	Hermetic	Cont.	45	AH-965M	1616084-2
400	DC	28	SPST NO	Side Stable	SPDT	28	Gasket/Vented	Int.	45	A-400A	1-1616530-6
		28	SPST NO	Side Stable	–	28	Gasket/Vented	Int.	45	A-400AA	1616056-2
		28	SPST NO	Side Stable	DPDT	28	Gasket/Vented	Cont.	45	A-400B	1616056-4
		28	SPST NO	Side Stable	(1)SPST NO (1)SPST NC	28	Environ.	Cont.	45	A-400D	1616056-5
		28	SPST NO	Side Stable	(1)SPST NO (1)SPST NC	28	Environ.	Cont.	45	A-400DB1	1-1616964-3
		28	SPST NO	Side Stable	SPDT	28	Gasket/Vented	Cont.	45	A-400DC	1616056-6
		28	SPST NO	Side Stable	DPST NO SPST NC	28	Gasket/Vented	Int.	45	A-400G	1616056-8
		28	SPST NO	Side Stable	DPST NO SPST NC	28	Gasket/Vented	Int.	45	A-400G2	6-1616949-1
		28	SPST NO	Side Stable	DPST NO DPST NC	28	Gasket/Vented	Int.	45	A-400L	1-1616530-5
		28	SPST NO	Side Stable	DPST NO SPST NC	28	Gasket/Vented	Cont/Int	45	A-400S	1616056-9
400	DC	28	SPST NO	Side Stable	SPDT	24-30	Gasket/Vented	Cont. Econ.	–	A-703	1616058-1
		28	SPST NO	Side Stable	–	24-30	Gasket/Vented	Int.	–	A-703CD	1616058-6
		36/40	SPST NO	Side Stable	SPST NO	24-30	Gasket/Vented	Int.	50	A-703CSM	1616058-7
		28	SPST NO	Side Stable	Form Z	24-30	Gasket/Vented	Int.	–	A-703D	1616058-8
		28	SPST NO	Side Stable	Form Z	18-31	Gasket/Vented	Int.	–	A-703DBH	1-1616058-0
		28	SPST NO	Side Stable	Form Z	24-30	Gasket/Vented	Cont. Econ.	–	A-703E	1-1616058-1
		28	SPST NO	Side Stable	Form Z SPST NC	24-30	Gasket/Vented	Int.	45	A-703FA	1-1616058-2
		28	SPST NO	Side Stable	Form Z SPST NC	24-30	Gasket/Vented	Int.	–	A-703FB	1-1616058-3
		28	SPST NO	Side Stable	Form Z SPST NC	24-30	Gasket/Vented	Int.	45	A-703FSS	1-1616058-4
		28	SPST NO	Side Stable	Form Z SPST NC	18-31	Gasket/Vented	Cont. Econ.	–	A-703G-1	1-1616058-5
		28	SPST NO	Side Stable	Form Z SPDT Form Z	18-31	Gasket/Vented	Cont. Econ.	–	A-703GC	1-1616058-6
		28	SPST NO	Side Stable	SPST NC	24-30	Gasket/Vented	Int.	–	A-703B	1616058-3
		28	SPST NO	Side Stable	Form Z SPST NC	18-31	Gasket/Vented	Cont. Econ.	45	A-703GS	1-1616058-7
		28	SPST NO	Side Stable	Form Z	24-30	Gasket/Vented	Cont. Econ.	45	A-703R	1-1616058-9
		28	SPST NO	Side Stable	SPST NO SPST NC	24-30	Gasket/Vented	Int.	45	A-703T	2-1616058-0
		28	SPST NO	Side Stable	SPST NO Form Z	18-24	Gasket/Vented	Cont. Econ.	45	A-703ZS	1-1616058-2
		28	SPST NO	Side Stable	1Form Z 1Form Y	18-31	Hermetic	Cont. Econ.	–	AH-703F	1616061-1

For factory-direct application assistance, phone 419-521-9500 or fax 419-526-2749.

Catalog 5-1773450-5
Revised 3-13

www.te.com

Dimensions are shown for reference purposes only. Specifications subject to change.

Dimensions are in millimeters unless otherwise specified.

USA: +1 800 522 6752
Asia Pacific: +86 0 400 820 6015
UK: +44 800 267 666

For additional support numbers please visit www.te.com

Cross Reference (Continued)

Main Current Rating	AC/DC	Rating	Main Contact Config.	Operating Mode	Aux. Contact Config.	Coil Voltage (VDC)	Seal Type	Duty Cycle	Coil Trans. Voltage	Hartman Part No.	TE Part No.
400	DC	28	SPDT	Side Stable	Form Z	17-31	Gasket/Vented	Int.	45	A-981S	1616083-7
		28	1PST NO 1PST NC	Side Stable	3PDT	24-30	Gasket/Vented	Cont. Econ.	–	A-981P	1616083-6
500	DC	50	SPST NO	Side Stable	SPDT SPST NC	38	Gasket/Vented	Cont. Econ.	50	A-792SFS	1616101-2
600	DC	29	SPST NO	Side Stable	–	24-28	Gasket/Vented	Cont.	–	A-712AB	2-1616058-3
		29	SPST NO	Side Stable	–	24-28	Gasket/Vented	Int.	–	A-712AF	2-1616058-4
		29	SPST NO	Side Stable	–	24-28	Gasket/Vented	Cont.	–	A-712J	2-1616058-6
		29	SPST NO	Side Stable	SPST NO SPDT	24-28	Gasket/Vented	Cont.	–	A-712W	6-1616058-3
600	DC	28/48	DPDT	Side Stable	SPST NO	29	Gasket/Vented	Int.	–	A-882DL	1616102-6
		28	SPST NC	Side Stable	DPST NO	18-30	Gasket/Vented	Cont. Econ.	45	A-931F	1616060-1
		28	SPDT	Side Stable	SPST NO	28	Gasket/Vented	Cont.	–	A-981E	1616083-1
		28	SPST NO SPST NC	Side Stable	–	24-30	Gasket/Vented	Cont. Econ.	–	A-981K	1616083-2

For factory-direct application assistance, phone 419-521-9500 or fax 419-526-2749.

Catalog 5-1773450-5
Revised 3-13

www.te.com

Dimensions are shown for reference purposes only. Specifications subject to change.

Dimensions are in millimeters unless otherwise specified.

USA: +1 800 522 6752
Asia Pacific: +86 0 400 820 6015
UK: +44 800 267 666

For additional support numbers please visit www.te.com

E-328-2 Series AC Low Voltage Warning Relay, 10 Amps, 28 Vdc Contacts

Product Facts

- **DPDT**
- **Gasket sealed**

Performance Data

Electrical Characteristics

Relay/Relay Driver

Contact Arrangement — DPDT

Rated Operating Voltage — 28 Vdc

Resistive Rating — 10 Amps

Inductive Rating — 5 Amps

Lamp Rating — 1.5 Amps

Coil Characteristics

Duty Cycle — Continuous

Voltage Sensor

Operating Voltage, Nom. — 115 V, 380-420 Hz

Pickup Voltage — 107 ± 3 Vrms

Dropout Voltage — 100 ± 2 Vrms

Dropout Time, Min. — 40 msec

General Characteristics

Temperature Range — -55°C to +85°C

Operating Cycles (Life)
Mechanical, Min. — 100,000 cycles

Weight,Max. – 6 oz.

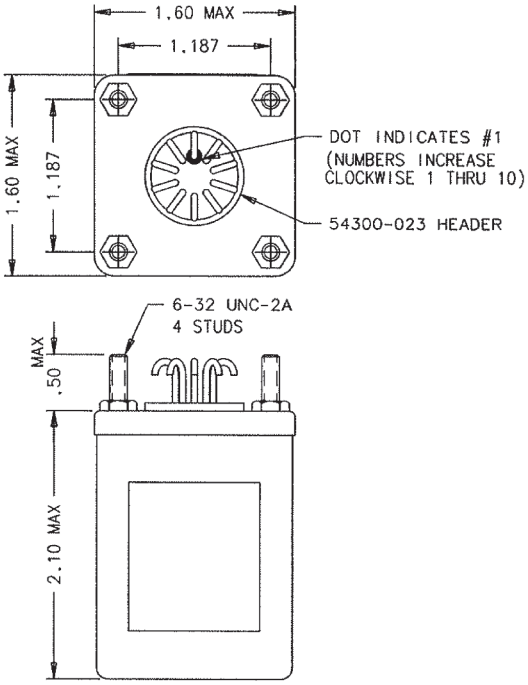

Mounting Style A

Circuit Configurations (Consult factory for other available circuit configurations)

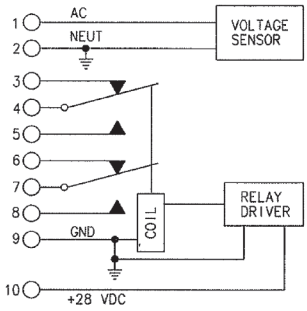

Circuit Configuration 1

For factory-direct application assistance, phone 419-521-9500 or fax 419-526-2749.

HARTMAN Part Number	Construction Type	Mounting Style	Coil Type	Circuit Config.	TE Part Number
E-328-2	Gasket/Vented	A	Continuous	1	1-1616126-8

Dimensions are shown for reference purposes only. Specifications subject to change.

Dimensions are in millimeters unless otherwise specified.

USA: +1 800 522 6752
Asia Pacific: +86 0 400 820 6015
UK: +44 800 267 666

For additional support numbers please visit www.te.com

A-772 Series Battery Contactor — Discharge Overload, Rated up to 200 Amps, 28 Vdc

Product Facts

- **SPST NO**
- **Gasket sealed**
- **Auxiliary contacts available**
- **Limits overload current duration**

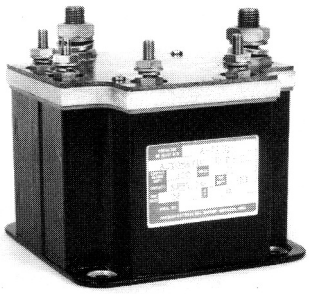

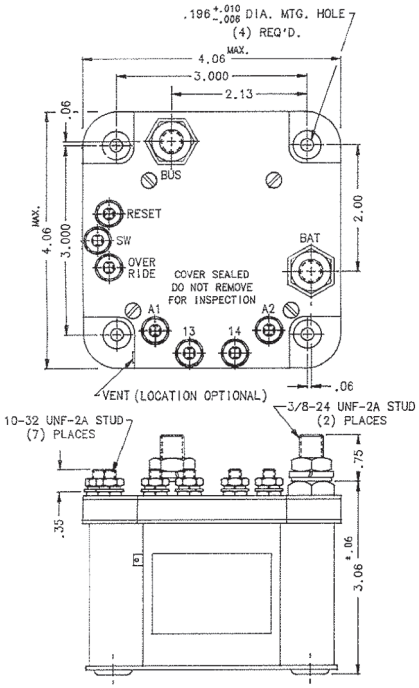

Mounting Style A

Performance Data

Electrical Characteristics

Main Contacts —

Contact Arrangement — SPST NO

Rated Operating Voltage — 28 Vdc

Resistive Rating — 200 Amps

Auxiliary Contacts —

Aux. Contact Arrangement — SPST NC

Rated Operating Voltage — 28 Vdc

Resistive Rating — 5 Amps

General Characteristics

Temperature Range — -55°C to +71°C

Operating Cycles (Life) at Rated Resistive Load — 50,000 cycles

Operating Cycles (Life) Mechanical — 100,000 cycles

Electrical— 50,000 min.

Weight, Max. — 2 lbs. 13 oz.

Coil Characteristics

Duty Cycle — Continuous

Operating Voltage, Max. — 30 V

Operating Voltage, Min. — 24 V

Pickup Voltage @ 25°C, Max. — 16 V

Dropout Voltage — 1 to 7 V

Overload Sensor

Type — Latching

Polarized — Discharge

Trip — 300 Amps ± 10%

Time Delay — 900 to 1,100 msec

Sensor Contacts, Aux.

Sensor Contact Arrangement — SPST NO

Rated Operating Voltage — 28 Vdc

Resistive Rating — 3 Amps

Reset Rating, Max. — 18 V

Circuit Configurations (Consult factory for other available circuit configurations)

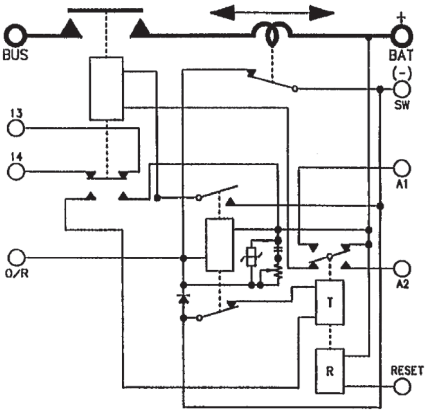

Circuit Configuration 1

HARTMAN Part Number	Construction Type	Mounting Style	Coil Type	Circuit Config.	TE Part Number
A-772XTB	Gasket/Vented	A	Continuous	1	1616545-1

For factory-direct application assistance, phone 419-521-9500 or fax 419-526-2749.

Catalog 5-1773450-5
Revised 3-13

www.te.com

Dimensions are shown for reference purposes only. Specifications subject to change.

Dimensions are in millimeters unless otherwise specified.

USA: +1 800 522 6752
Asia Pacific: +86 0 400 820 6015
UK: +44 800 267 666

For additional support numbers please visit www.te.com

E-387 Series Current Sensor, Rated up to 25 Amps, 28 Vdc

Product Facts

- **SPDT**
- **Gasket sealed**
- **Meets many requirements of MIL-PRF-6106**

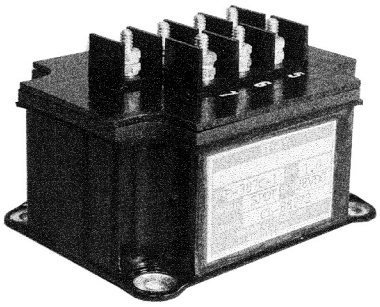

Performance Data

Electrical Characteristics

Indicator Contact Arrangement — SPDT

Rated Operating Voltage — 28 Vdc

Resistive Rating — 1 Amp

General Characteristics

Dielectric Strength — 1,000 Vrms, 60 Hz

Insulation Resistance @ 500 Vdc & 20°C & 50% R.H. (Max.)— 1,000 megohm min.

Weight, Max. — 8 oz

Coil Characteristics

Duty Cycle — Continuous

Control Power — 28 Vdc

Sensor Input — 400 Hz ± 100 Hz

Pickup Current — 14 ± 2 Amps

Dropout Current — 7 ± 1 Amp

Continuous Sensor Current — 25 Amp, max.

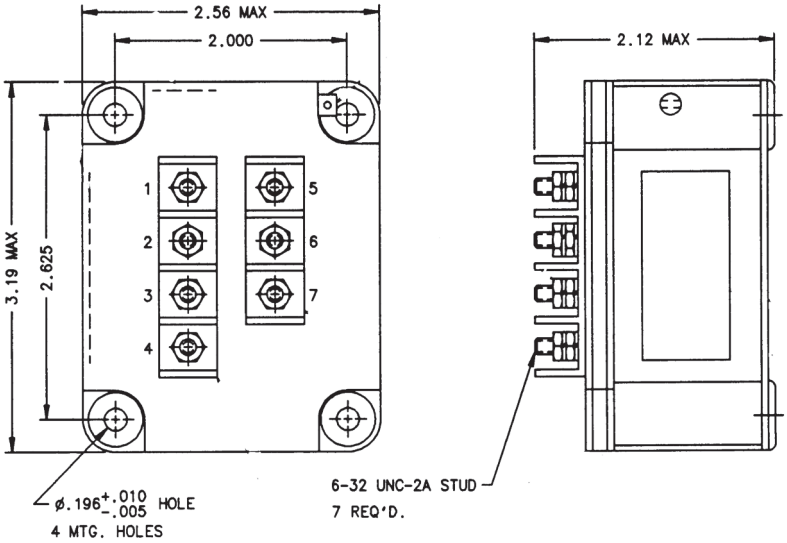

Mounting Style A

Circuit Configurations (Consult factory for other available circuit configurations)

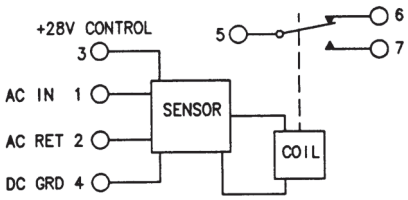

Circuit Configuration 1

HARTMAN Part Number	Construction Type	Mounting Style	Coil Type	Circuit Config.	TE Part Number
E-387C-1	Gasket/Vented	A	Continuous	1	2-1616126-3

For factory-direct application assistance, phone 419-521-9500 or fax 419-526-2749.

Catalog 5-1773450-5
Revised 3-13

www.te.com

Dimensions are shown for reference purposes only. Specifications subject to change.

Dimensions are in millimeters unless otherwise specified.

USA: +1 800 522 6752
Asia Pacific: +86 0 400 820 6015
UK: +44 800 267 666

For additional support numbers please visit www.te.com

A-700 Series Cutout — Reverse Current, Rated up to 100 Amps, 28 Vdc

Product Facts

- **SPST NO**
- **Gasket sealed**
- **Auxiliary contacts available**

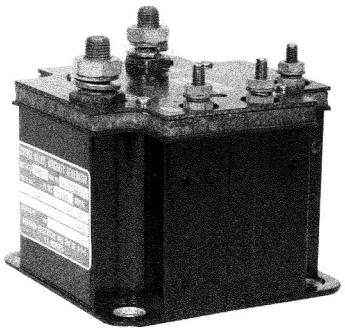

Performance Data

Electrical Characteristics

Main Contacts —

Contact Arrangement — SPST NO

Rated Operating Voltage — 28 Vdc

Resistive Rating — 100 Amps

Resistive Rating at 1 min. — 200 Amps

Interrupting Capacity — 4,500 Amps

Reverse Current Setting* — 2 to 6 Amps

Differential Voltage for Pickup — .85 ± .15 V

Auxiliary Contacts —

Aux. Contact Arrangement — SPST NC, SPST NO

Resistive Rating — 5 Amps

Inductive Rating — 2 Amps

Lamp Rating — 1 Amps

General Characteristics

Weight, Max. — 3 lbs 1 oz

Coil Characteristics

Duty Cycle — Continuous

*Over a Voltage Range of 27.5 ± 2.5 Vdc

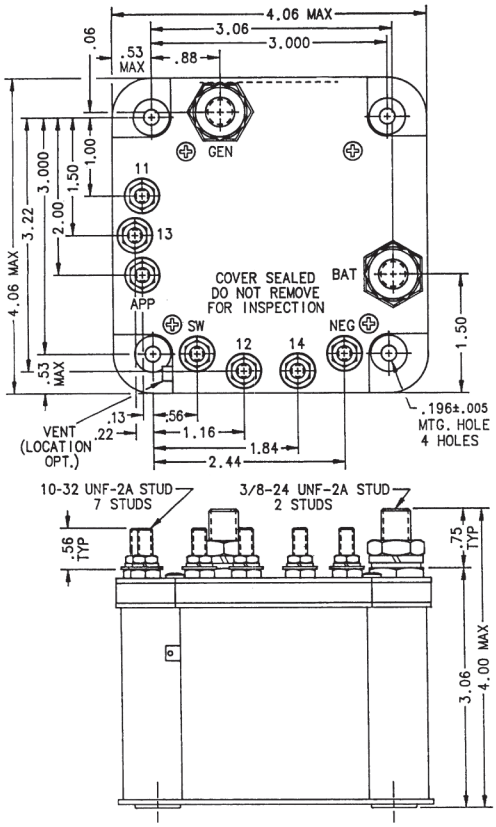

Mounting Style A

Circuit Configurations (Consult factory for other available circuit configurations)

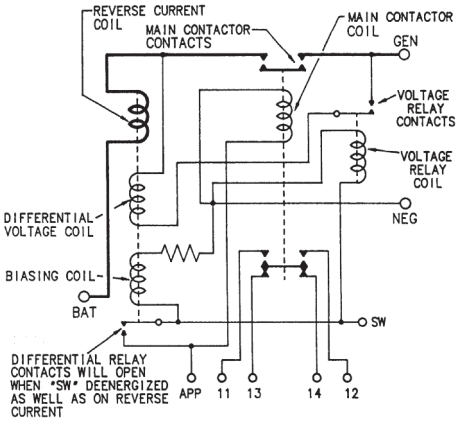

Circuit Configuration 1

For factory-direct application assistance, phone 419-521-9500 or fax 419-526-2749.

HARTMAN Part Number	Construction Type	Mounting Style	Coil Type	Circuit Config.	TE Part Number
A-700BU	Gasket/Vented	A	Continuous	1	1616109-6

Catalog 5-1773450-5
Revised 3-13

www.te.com

Dimensions are shown for reference purposes only. Specifications subject to change.

Dimensions are in millimeters unless otherwise specified.

USA: +1 800 522 6752
Asia Pacific: +86 0 400 820 6015
UK: +44 800 267 666

For additional support numbers please visit www.te.com

A-700 Series Cutout — Reverse Current, Rated up to 200 Amps, 28 Vdc

Product Facts

- **SPST NO**
- **Gasket sealed**
- **Meets many requirements of MIL-PRF-6106**

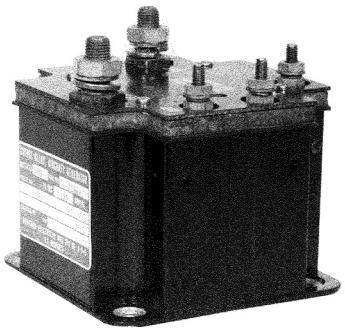

Performance Data

Electrical Characteristics

Contact Arrangement — SPST NO

Rated Operating Voltage — 28 Vdc

Current Rating, Continuous — 200 Amps

Current Rating at 15 sec. — 1,000 Amps

Current Rating at 1 min. — 500 Amps

Current Rating at 5 min. — 300 Amps

Interrupting Capacity — 4,500 Amps

Reverse Current Setting* — 6 to 17 Amps

Differential Voltage for Pickup — .85 ± .15 V

General Characteristics

Temperature Range — -55°C to +71°C

Operating Cycles (Life) at Rated Resistive Load, Min. — 50,000 cycles

Operating Cycles (Life) Mechanical, Min. — 100,000 cycles

Electrical— 50,000 min.

Weight, Max. — 2 lbs 15 oz

Coil Characteristics

Duty Cycle — Continuous

*Over a Voltage Range of 27.5 ± 2.5 Vdc and Calibrated at 12 ± 1 Amp RC at 28 Vdc & 25°C ± 5°C

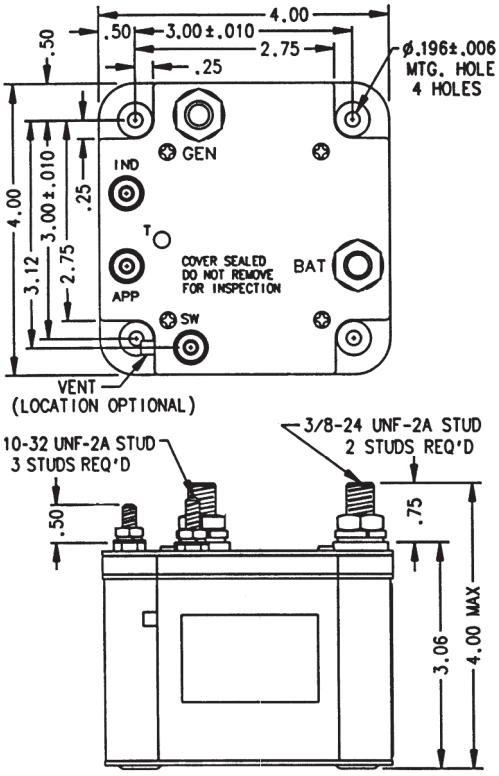

Mounting Style A

Circuit Configurations (Consult factory for other available circuit configurations)

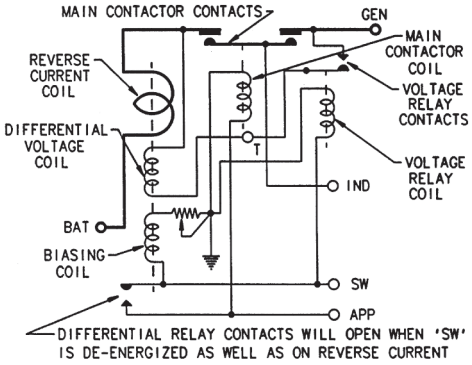

Circuit Configuration 1

HARTMAN Part Number	Construction Type	Mounting Style	Coil Type	Circuit Config.	TE Part Number
A-700AQ-4	Gasket/Vented	A	Continuous	1	1616109-4

For factory-direct application assistance, phone 419-521-9500 or fax 419-526-2749.

Catalog 5-1773450-5
Revised 3-13

www.te.com

Dimensions are shown for reference purposes only. Specifications subject to change.

Dimensions are in millimeters unless otherwise specified.

USA: +1 800 522 6752
Asia Pacific: +86 0 400 820 6015
UK: +44 800 267 666

For additional support numbers please visit www.te.com

A-700 Series Cutout — Reverse Current, Rated up to 300 Amps, 28 Vdc

Product Facts

- **SPST NO, Double break**
- **Gasket sealed**
- **Meets many requirements of MIL-PRF-6106**

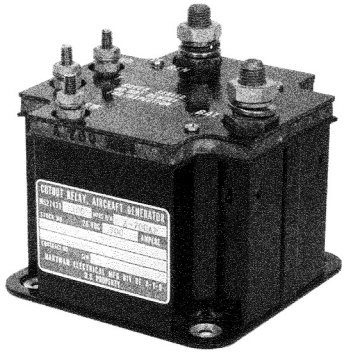

Performance Data

Electrical Characteristics

Contact Arrangement — SPST NO, Double Break

Rated Operating Voltage — 28 Vdc

Resistive Rating — 300 Amps

Reverse Current Dropout — 9 to 25 Amps

Differential Pickup — .5 ± .15

General Characteristics

Temperature Range — -55°C to +71°C

Operating Cycles (Life) at Rated Resistive Load, Min. — 50,000 cycles

Operating Cycles (Life) Mechanical, Min. — 100,000 cycles

Electrical —50,000 min.

Dielectric Strength — All Circuits to Ground — 1,250 Vrms
Circuit to Circuit — 1,250 Vrms
Coil to Ground and Aux. Contacts — 500 Vrms

Weight, Max. — A-700AAP — 2.9 lbs
A-700ZC-7, A-700ZG — 2.5 lbs

Coil Characteristics

Duty Cycle — Continuous

Duty Cycle when using "APP" — Intermittent

Nom. Coil Voltage — 24 to 30 Vdc

Pickup Voltage, Max. — 18 Vdc

Dropout Voltage — 0.5 to 7.0 Vdc

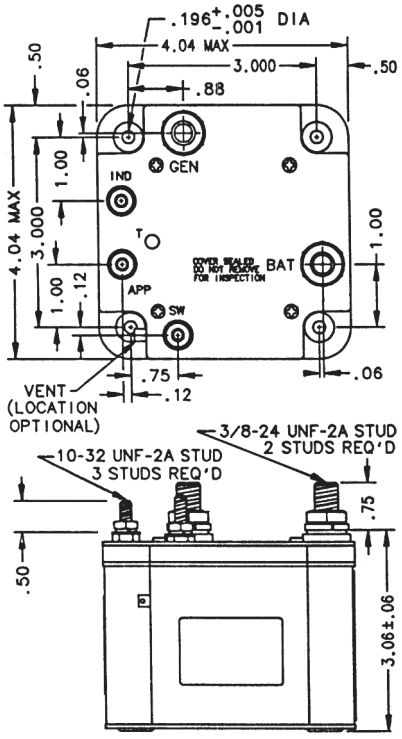

Mounting Style A

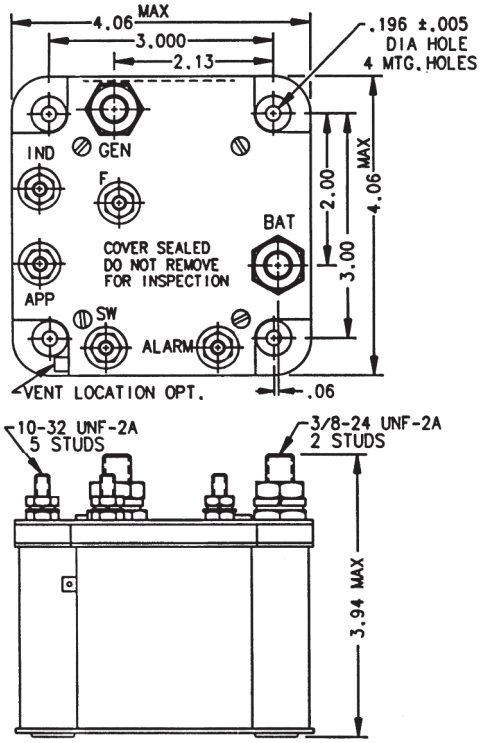

Mounting Style B

For factory-direct application assistance, phone 419-521-9500 or fax 419-526-2749.

Catalog 5-1773450-5
Revised 3-13

www.te.com

Dimensions are shown for reference purposes only. Specifications subject to change.

Dimensions are in millimeters unless otherwise specified.

USA: +1 800 522 6752
Asia Pacific: +86 0 400 820 6015
UK: +44 800 267 666

For additional support numbers please visit www.te.com

A-700 Series Cutout — Reverse Current, Rated up to 300 Amps, 28 Vdc (Continued)

Circuit Configurations (Consult factory for other available circuit configurations)

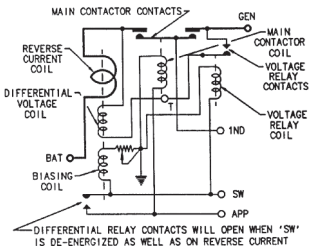

Circuit Configuration 1

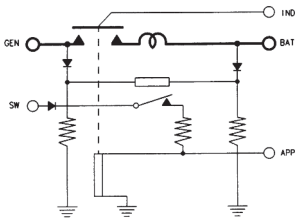

Circuit Configuration 2

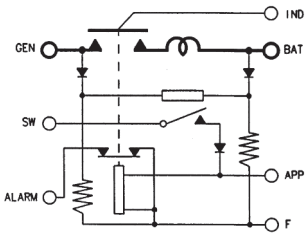

Circuit Configuration 3

HARTMAN Part Number	Construction Type	Mounting Style	Coil Type	Circuit Config.	TE Part Number
A-700AAP	Gasket/Vented	A	Continuous	1	1616109-1
A-700ZC-7	Gasket/Vented	A	Continuous	2	1616109-7
A-700ZG	Gasket/Vented	B	Continuous	3	1616109-9

For factory-direct application assistance, phone 419-521-9500 or fax 419-526-2749.

Catalog 5-1773450-5
Revised 3-13

www.te.com

Dimensions are shown for reference purposes only. Specifications subject to change.

Dimensions are in millimeters unless otherwise specified.

USA: +1 800 522 6752
Asia Pacific: +86 0 400 820 6015
UK: +44 800 267 666

For additional support numbers please visit www.te.com

A-701 Series Cutout — Reverse Current, Rated up to 400 Amps, 28 Vdc

Product Facts

- **SPST NO, Double break**
- **Gasket sealed**
- **Meets many requirements of MIL-C-5026 and MIL-PRF-6106**

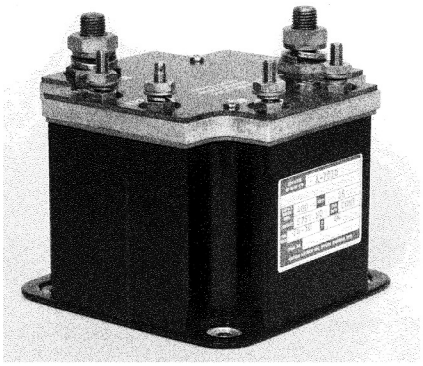

Performance Data

Electrical Characteristics

Contact Arrangement — SPST NO, Double Break

Rated Operating Voltage — 28 Vdc

Resistive Rating — 400 Amps

Resistive for 30 sec. — 1,000 Amps

Inrush Rating — 1,500 Amps

Reverse Current Dropout —
A-701D — 25 to 50 Amps
A-701C — 18 to 35 Amps

General Characteristics

Temperature Range — -55°C to +71°C

Operating Cycles (Life) at Rated Resistive Load, Min. — 50,000 cycles

Operating Cycles (Life) Mechanical, Min. — 100,000 cycles

Electrical — 50,000 min.

Dielectric Strength —
All Circuits to Ground — 1,250 Vrms
Circuit to Circuit — 1,250 Vrms
Coil to Ground and Aux. Contacts — 500 Vrms

Differential Pickup — 0.5 ± .15 Vdc

Weight, Max. —
A-701D — 3 lbs 10 oz
A-701C — 4 lbs

Coil Characteristics

Duty Cycle — Continuous, economizing

Duty Cycle when using "APP"on A-701D or "GMG" on A-701C — Intermittent

Nom. Coil Voltage — 24 to 30 Vdc

Pickup Voltage, Max. —
A-701D — 15 Vdc
A-701C — 12 Vdc

Dropout Voltage — 0.5 to 7.0 Vdc

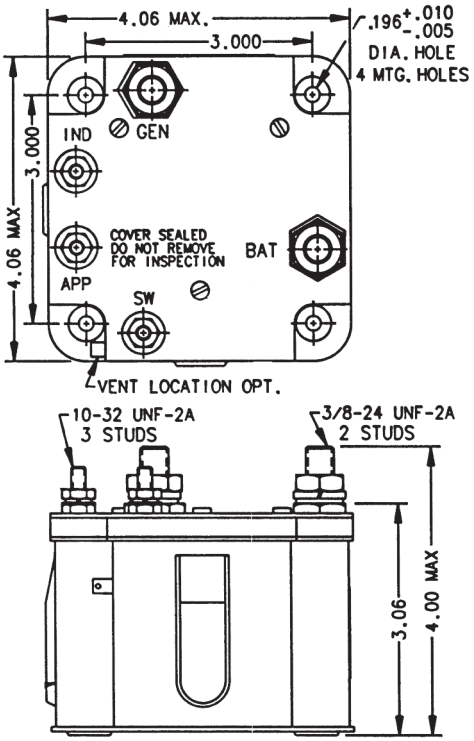

Mounting Style A

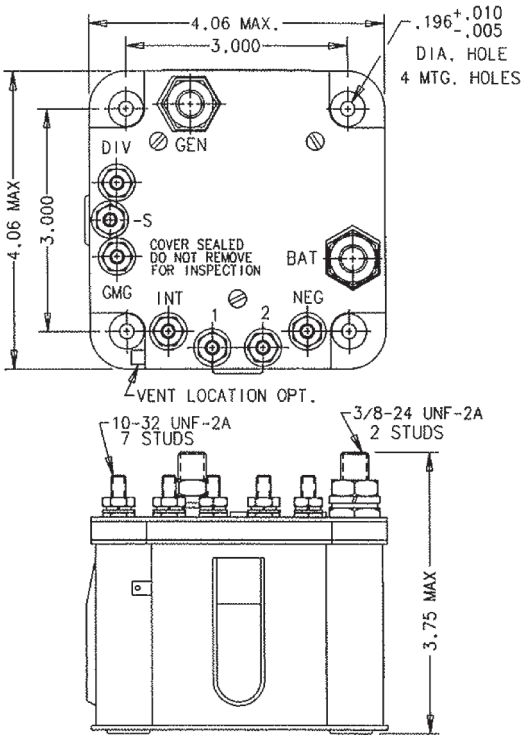

Mounting Style B

For factory-direct application assistance, phone 419-521-9500 or fax 419-526-2749.

Catalog 5-1773450-5
Revised 3-13

www.te.com

Dimensions are shown for reference purposes only. Specifications subject to change.

Dimensions are in millimeters unless otherwise specified.

USA: +1 800 522 6752
Asia Pacific: +86 0 400 820 6015
UK: +44 800 267 666

For additional support numbers please visit www.te.com

A-701 Series Cutout — Reverse Current, Rated up to 400 Amps, 28 Vdc (Continued)

Circuit Configurations (Consult factory for other available circuit configurations)

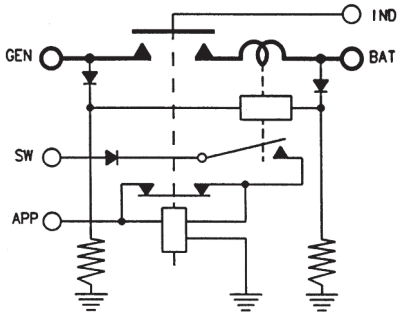

Circuit Configuration 1

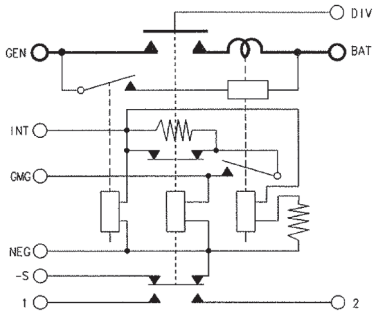

Circuit Configuration 2

HARTMAN Part Number	Construction Type	Mounting Style	Coil Type	Circuit Config.	TE Part Number
A-701D	Gasket/Vented	A	Continuous, Economizing	1	1-1616109-1
A-701C	Gasket/Vented	B	Continuous, Economizing	2	1-1616109-0

For factory-direct application assistance, phone 419-521-9500 or fax 419-526-2749.

Catalog 5-1773450-5
Revised 3-13

www.te.com

Dimensions are shown for reference purposes only. Specifications subject to change.

Dimensions are in millimeters unless otherwise specified.

USA: +1 800 522 6752
Asia Pacific: +86 0 400 820 6015
UK: +44 800 267 666

For additional support numbers please visit www.te.com

A-702 Series Cutout — Reverse Current, Rated up to 600 Amps, 28 Vdc

Product Facts

- **SPST NO**
- **Gasket sealed**

Performance Data

Electrical Characteristics

Contact Arrangement — SPST NO, Double Break

Rated Operating Voltage — 28 Vdc

Resistive Rating — 600 Amps

Reverse Current Dropout — 18 to 35 Amps

Differential Pickup — .5 ± .15

General Characteristics

Temperature Range — -55°C to +71°C

Operating Cycles (Life) at Rated Resistive Load, Min. — 50,000 cycles

Operating Cycles (Life) Mechanical, Min. — 100,000 cycles

Electrical —50,000 min.

Dielectric Strength — All Circuits to Ground — 1,250 Vrms
Circuit to Circuit — 1,250 Vrms
Coil to Ground and Aux. Contacts — 500 Vrms

Weight, Max. — 3.9 lbs.

Coil Characteristics

Duty Cycle — Continuous

Duty Cycle when using "APP" — Continuous

Nom. Coil Voltage — 24 to 30 Vdc

Pickup Voltage, Max. — 18 Vdc

Dropout Voltage — 0.5 to 7.0 Vdc

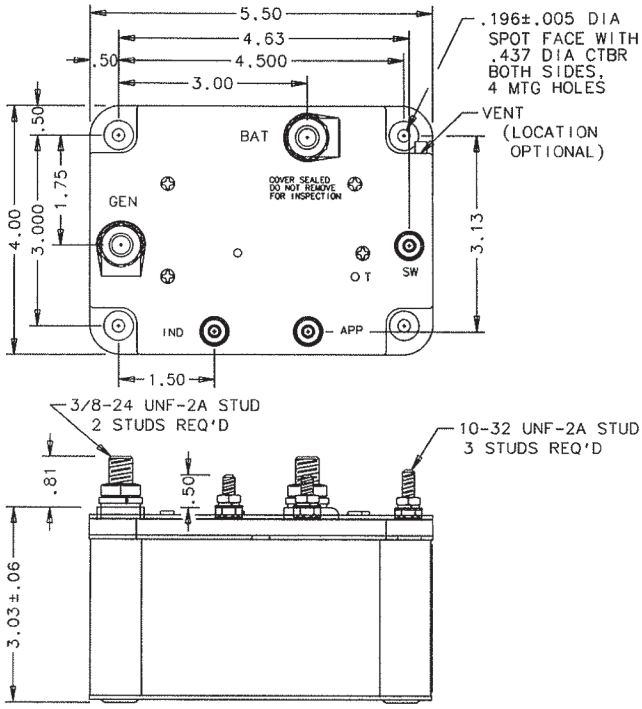

Mounting Style A

Circuit Configurations (Consult factory for other available circuit configurations)

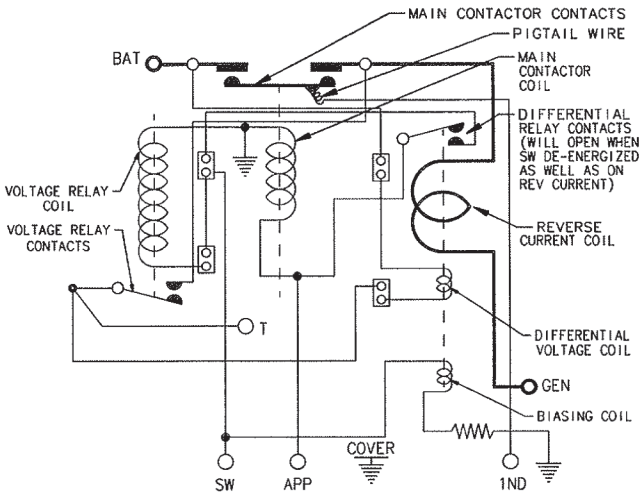

Circuit Configuration 1

HARTMAN Part Number	Construction Type	Mounting Style	Coil Type	Circuit Config.	TE Part Number
A-702AAP	Gasket/Vented	A	Continuous	1	1-1616109-3

For factory-direct application assistance, phone 419-521-9500 or fax 419-526-2749.

Catalog 5-1773450-5
Revised 3-13

www.te.com

Dimensions are shown for reference purposes only. Specifications subject to change.

Dimensions are in millimeters unless otherwise specified.

USA: +1 800 522 6752
Asia Pacific: +86 0 400 820 6015
UK: +44 800 267 666

For additional support numbers please visit www.te.com

B-188 Series External Power Monitor, 115 VAC, 400 Hz

Product Facts

- **SPST**
- **Gasket Sealed**
- **Over/under frequency protection**
- **Over/under voltage protection**
- **Dust tight**

Performance Data

Electrical Characteristics

Contact Arrangement — SPST

Rated Operating Voltage — 115 VAC/28 Vdc, 3 phase, 400 Hz

Resistive Rating — 3 Amps

General Characteristics

Operating Temperature Range — -54°C to +71°C

Dielectric Strength — Leakage current will not exceed .001 Amps when unit is subjected to test of Para. 4.6.2 of MIL-E-24021A

Altitude — 0-40,000 ft

Weight, Max. — .75 lb

Sinusoidal Vibration — 5-15.5 CPS ±0.13 G, 15.5-54 CPS 0.01 inch DA, 54-500 CPS ± 1.5 G

Shock, Max. — 10 G 30 ± 1 ms

Operation — Contacts will remain as shown (off condition) until input power is anywhere within the "on" zone. Contacts will revert to off condition whenever input voltage and/or frequency is above the high side or below the low side "off". Limits for time intervals exceeding the transient period.

Limits —

"On" zone —
- "On" zone voltage limits 100 to 120 volts rms all phases
- "On" zone frequency limits 380 to 420 CPS

"Off" limits —
- High side voltage "off" limits — 131 ± 5 volts 3 Ø (highest of 3Ø)
- High side frequency "off" limits — 425 ± 5 CPS
- Low side frequency "off" limits — 375 ± 5 CPS

Voltage Transient Limits —
- High Side — above limit 2 but below limit 1 of Fig. 2 MIL-STD-704, 3Ø (highest of 3Ø)
- Low Side — below limit 3 Fig. 2 MIL-STD-704

Over and Under frequency time delay 3 ± 1 sec.

Output rating SPST 3 AMP Ind. 28 V DC/115 V 400 CPS

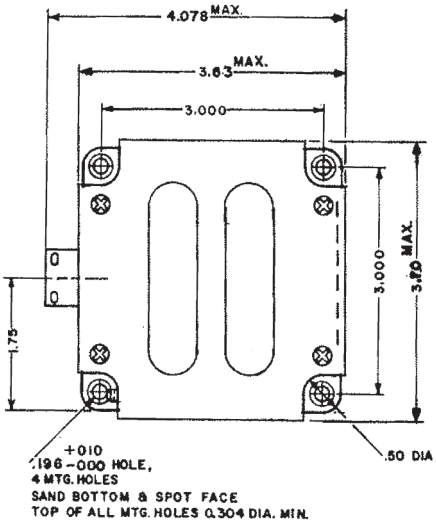

Mounting Style A

Circuit Configurations (Consult factory for other available circuit configurations)

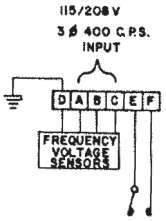

Circuit Configuration 1

For factory-direct application assistance, phone 419-521-9500 or fax 419-526-2749.

HARTMAN Part Number	Construction Type	Mounting Style	Coil Type	Circuit Config.	TE Part Number
B-188MA-1	Gasket/Vented	A	N/A	1	1616114-7

Catalog 5-1773450-5
Revised 3-13

www.te.com

Dimensions are shown for reference purposes only. Specifications subject to change.

Dimensions are in millimeters unless otherwise specified.

USA: +1 800 522 6752
Asia Pacific: +86 0 400 820 6015
UK: +44 800 267 666

For additional support numbers please visit www.te.com

A-711 Series Relay, Automatic Dropout, Rated up to 600 Amps, 29 Vdc

Product Facts

- **SPST NO, Double break**
- **Gasket sealed**
- **Auxiliary contacts available**
- **Meets many requirements of MIL-PRF-6106**

Performance Data

Electrical Characteristics

Contact Arrangement — SPST NO, Double Break

Operating Voltage, Max. — 29 Vdc

Resistive Rating — 600 Amps

Pickup Voltage, Max. — 17 Vdc

Dropout Voltage, Max. — 14 Vdc, except for A-711 which is 1 to 5 Vdc

Pickup Current, Max. — 490 Amps

Dropout Current at any Contactor Voltage — 150 ± 15 Amps, except for A-711R which is S1 — 135 ± 15 Amps and S2 — 235 ± 20 Amps

General Characteristics

Temperature Range — -55°C to +71°C

Operating Cycles (Life) at Rated Resistive Load, Min. — 25,000 cycles

Operating Period, Max. — 3 min.

Weight, Max. —
A-711JF, A-711JF — 3 lbs 13 oz
A-711Z — 3 lbs 6 oz
A-711R — 3 lbs 5 oz

Coil Characteristics

Duty Cycle — Intermittent

Coil Current, Max. —
A-711AJ, A-711JM — 2 Amps
A-711Z — 0.6 Amp
A-711R — 1.0 Amp

Coil Voltage, Nom. — 28 Vdc

Signal Resistor — 20 Ohm ± 10%, 20 W

Coil Res., "C" Term. to "GND" — 36 Ohm ± 10%

For factory-direct application assistance, phone 419-521-9500 or fax 419-526-2749.

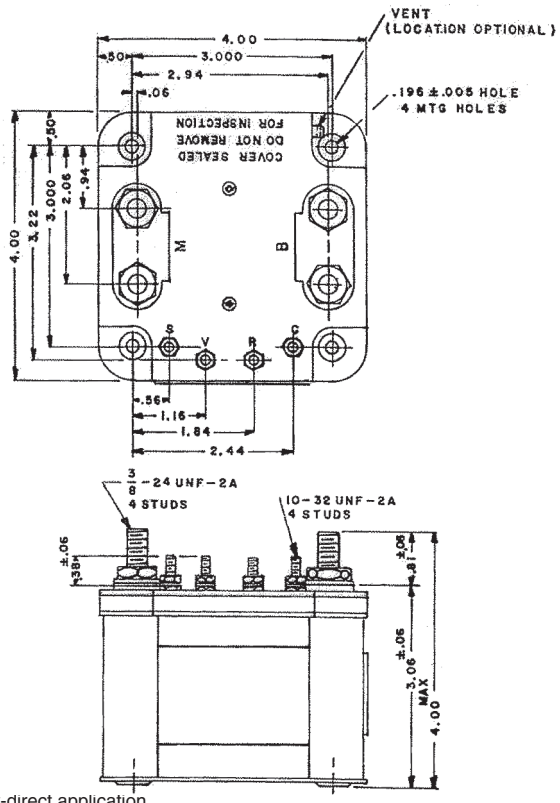

Mounting Style A

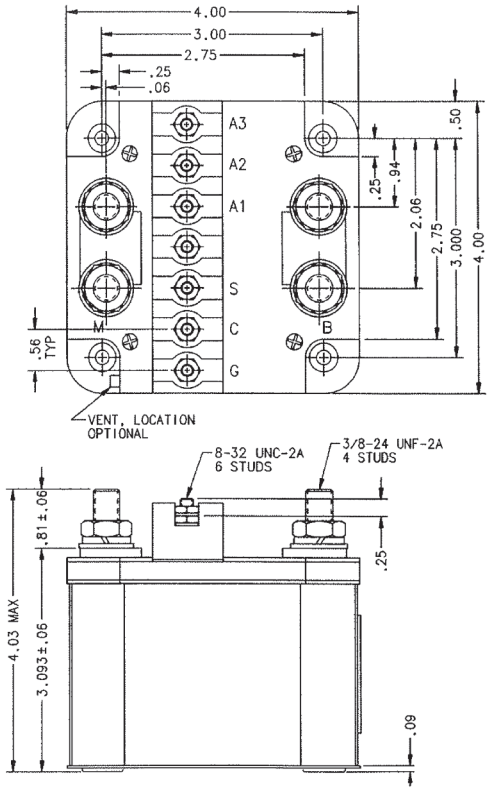

Mounting Style B

For factory-direct application assistance, phone 419-521-9500 or fax 419-526-2749.

Catalog 5-1773450-5
Revised 3-13

www.te.com

Dimensions are shown for reference purposes only. Specifications subject to change.

Dimensions are in millimeters unless otherwise specified.

USA: +1 800 522 6752
Asia Pacific: +86 0 400 820 6015
UK: +44 800 267 666

For additional support numbers please visit www.te.com

A-711 Series Relay, Automatic Dropout, Rated up to 600 Amps, 29 Vdc (Continued)

Circuit Configurations (Consult factory for other available circuit configurations)

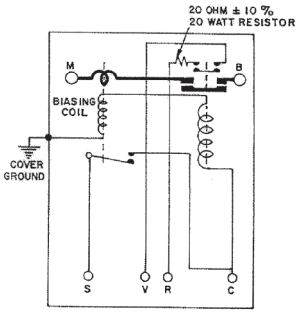

Circuit Configuration 1

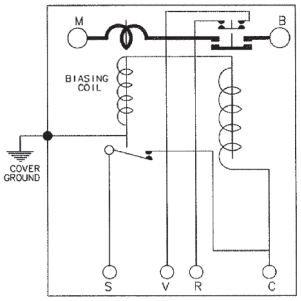

Circuit Configuration 2

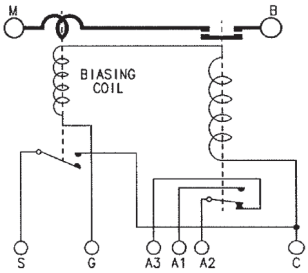

Circuit Configuration 3

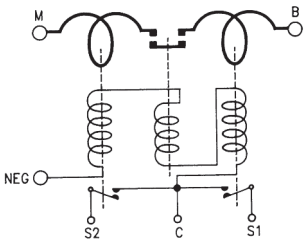

Circuit Configuration 4

HARTMAN Part Number	Construction Type	Mounting Style	Coil Type	Circuit Config.	TE Part Number
A-711JF	Gasket/Vented	A	Intermittent	1	1-1616109-6
A-711JM	Gasket/Vented	A	Intermittent	2	1-1616109-7
A-711Z	Gasket/Vented	B	Intermittent	3	6-1616071-3
A-711R	Gasket/Vented	A	Intermittent	4	1-1616109-8

For factory-direct application assistance, phone 419-521-9500 or fax 419-526-2749.

Catalog 5-1773450-5
Revised 3-13

www.te.com

Dimensions are shown for reference purposes only. Specifications subject to change.

Dimensions are in millimeters unless otherwise specified.

USA: +1 800 522 6752
Asia Pacific: +86 0 400 820 6015
UK: +44 800 267 666

For additional support numbers please visit www.te.com

A-957 Series Relay, Automatic Cutout, Rated up to 200 Amps, 28 Vdc

Product Facts

- **SPST NO, Double break**
- **Gasket sealed**
- **Auxiliary contacts available**
- **Meets many requirements of MIL-PRF-6106**

Performance Data

Electrical Characteristics

Main Contacts —

Contact Arrangement — SPST NO, Double Break

Operating Voltage, Nom. — 28 Vdc

Resistive Rating — 200 Amps

Inrush Rating — 300 Amps

Pickup Current —
VR — 21-24 V
I — 25 Amp Max.
SR — 18 V Max.
MC — 18 V Max.

Dropout Current —
I — 5 Amp Min.
SR — 18 ± 3 V
MC — 1 to 7 V

Auxiliary Contacts —

Aux. Contact Arrangement — SPST NO, SPST NC

Rated Operating Voltage — 28 Vdc

Resistive Rating — 5 Amps

General Characteristics

Temperature Range — -55°C to +71°C

Operating Cycles (Life) at Rated Resistive Load, Min. — 50,000 cycles

Operating Cycles (Life) Mechanical — 100,000 cycles

Altitude, Max. — 50,000 ft

Weight, Max. — 4 lbs 8 oz

Coil Characteristics

Duty Cycle — Continuous

Coil Voltage, Nom. — 24 to 30 Vdc

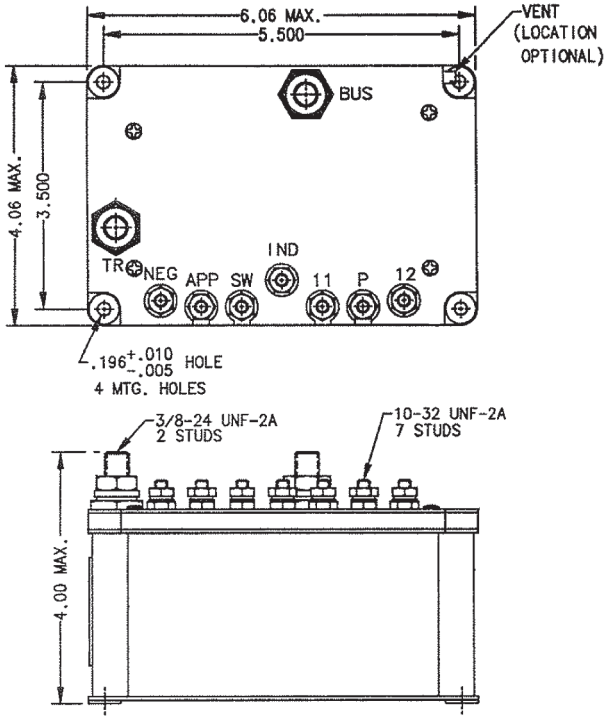

Mounting Style A

Circuit Configurations (Consult factory for other available circuit configurations)

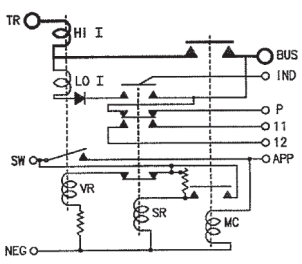

Circuit Configuration 1

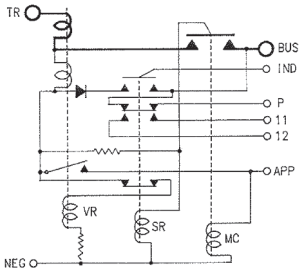

Circuit Configuration 2

HARTMAN Part Number	Construction Type	Mounting Style	Coil Type	Circuit Config.	TE Part Number
A-957CSD	Gasket/Vented	A	Continuous	1	1616110-6
A-957G	Gasket/Vented	A	Continuous	2	1616110-8

For factory-direct application assistance, phone 419-521-9500 or fax 419-526-2749.

Catalog 5-1773450-5
Revised 3-13

www.te.com

Dimensions are shown for reference purposes only. Specifications subject to change.

Dimensions are in millimeters unless otherwise specified.

USA: +1 800 522 6752
Asia Pacific: +86 0 400 820 6015
UK: +44 800 267 666

For additional support numbers please visit www.te.com

A-957 Series Relay, Automatic Cutout, Rated up to 300 Amps, 24/30 Vdc

Product Facts

- **SPST NO, Double break**
- **Gasket sealed**
- **Meets many requirements of MIL-PRF-6106**

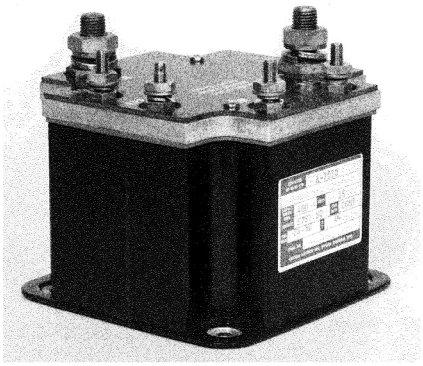

Performance Data

Electrical Characteristics

Contact Arrangement — SPST NO, Double Break

Operating Voltage, Nom. — 24/30 Vdc

Resistive Rating — 300 Amps

Inrush Rating — 800 Amps

Pickup Current —
VR — 21-24 Vdc
Current — 25 Amp Max.
SR — 18 V Max.
Main Contactor — 18 V Max.

Dropout Current —
Current — 5 Amp Min.
SR — 18 ± 3 V
Main Contactor — 12 V Max.

General Characteristics

Temperature Range — -55°C to +71°C

Operating Cycles (Life) at Rated Resistive Load, Min. — 50,000 cycles

Operating Cycles (Life) Mechanical — 100,000 cycles

Weight, Max. — 3.5 lbs

Coil Characteristics

Duty Cycle — Continuous

Coil Voltage, Nom. — 24 to 30 Vdc

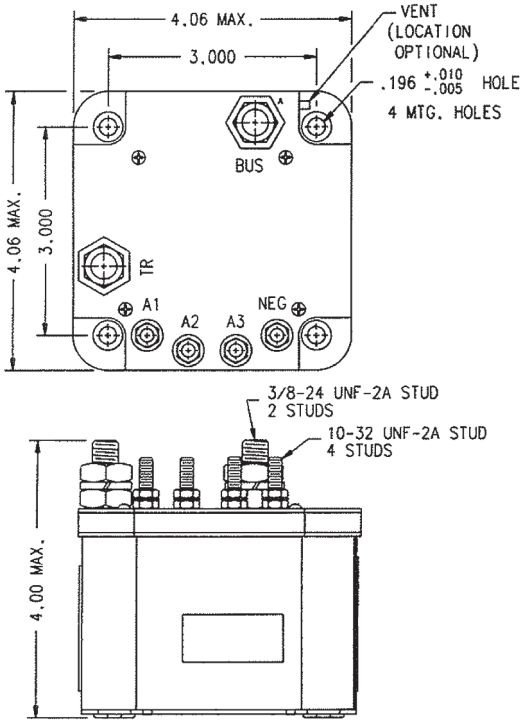

Mounting Style A

Circuit Configurations (Consult factory for other available circuit configurations)

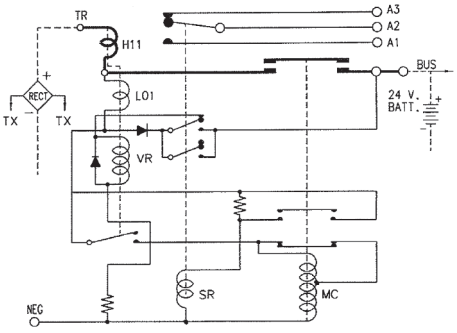

Circuit Configuration 1

HARTMAN Part Number	Construction Type	Mounting Style	Coil Type	Circuit Config.	TE Part Number
A-957E	Gasket/Vented	A	Continuous	1	1616110-7

For factory-direct application assistance, phone 419-521-9500 or fax 419-526-2749.

Catalog 5-1773450-5
Revised 3-13

www.te.com

Dimensions are shown for reference purposes only. Specifications subject to change.

Dimensions are in millimeters unless otherwise specified.

USA: +1 800 522 6752
Asia Pacific: +86 0 400 820 6015
UK: +44 800 267 666

For additional support numbers please visit www.te.com

A-957 Series Relay, Automatic Cutout, Rated up to 350 Amps, 28 Vdc

Product Facts

- **SPST NO, Double break**
- **Gasket sealed**
- **Auxiliary contacts available**
- **Meets many requirements of MIL-PRF-6106**

Performance Data

Electrical Characteristics

Main Contacts —

Contact Arrangement —
SPST NO, Double Break

Operating Voltage, Nom. — 28 Vdc

Resistive Rating — 350 Amps

Pickup Current —
VR — 21-24 V
I — 25 Amp Max.
SR — 18 V Max.
MC — 18 V Max.

Dropout Current —
I — 5 Amp Min.
SR — 18 ± 3 V
MC — 1 to 7 V

Auxiliary Contacts —

Aux. Contact Arrangement —
SPDT

Rated Operating Voltage — 28 Vdc

Resistive Rating — 5 Amps

General Characteristics

Ambient Temperature Range —
-30°F to +220°F

Altitude, Max. — 50,000 ft

Weight, Max. — 4 lbs 8 oz

Coil Characteristics

Duty Cycle — Continuous

Coil Voltage, Nom. — 24 to 30 Vdc

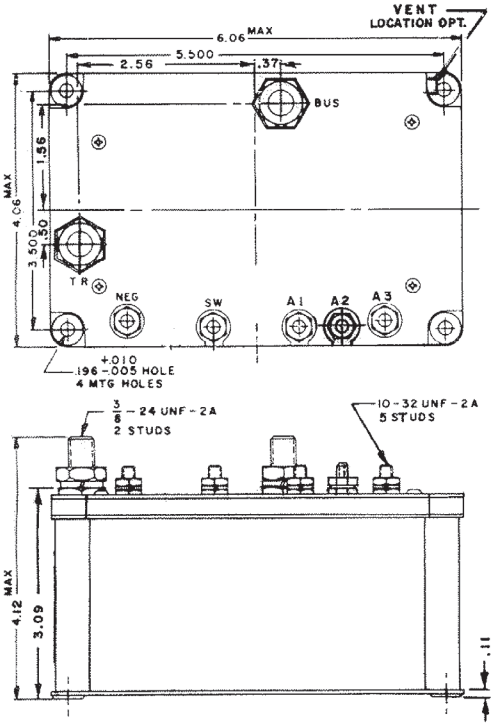

Mounting Style A

Circuit Configurations (Consult factory for other available circuit configurations)

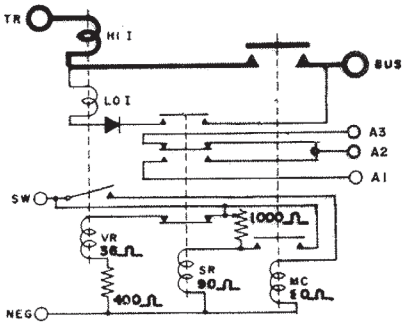

Circuit Configuration 1

HARTMAN Part Number	Construction Type	Mounting Style	Coil Type	Circuit Config.	TE Part Number
A-957CA	Gasket/Vented	A	Continuous	1	1616110-5

For factory-direct application assistance, phone 419-521-9500 or fax 419-526-2749.

Catalog 5-1773450-5
Revised 3-13

www.te.com

Dimensions are shown for reference purposes only. Specifications subject to change.

Dimensions are in millimeters unless otherwise specified.

USA: +1 800 522 6752
Asia Pacific: +86 0 400 820 6015
UK: +44 800 267 666

For additional support numbers please visit www.te.com

Q-50 Series Relay, Current Indicator, Rated up to 2 Amps, 28 Vdc

Product Facts

- **SPST NC**
- **Environmentally sealed**
- **Meets many requirements of MIL-PRF-6106**

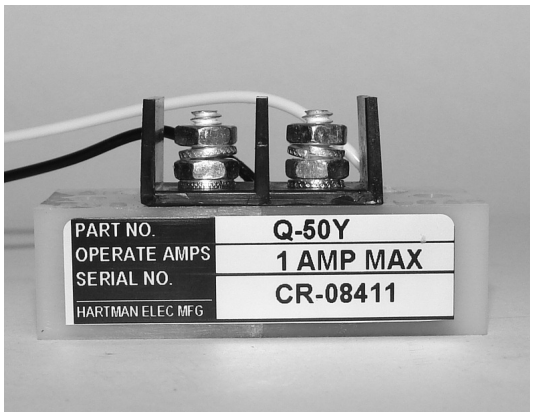

Performance Data

Electrical Characteristics

Contact Arrangement — SPST NC

Contact Rating @ 120 Vdc — 0.1 Amp

Rated Operating Voltage — 28 Vdc

Sensing Current Rating — 2 Amps, continuous

Pickup Max. — 1 Amp DC

Dropout Min. — 0.4 Amp

Operating Voltage, Nom. — 28 Vdc

General Characteristics

Temperature Range — -55°C to +71°C

Altitude, Max. — 50,000 ft

Weight, Max. — 1.25 oz

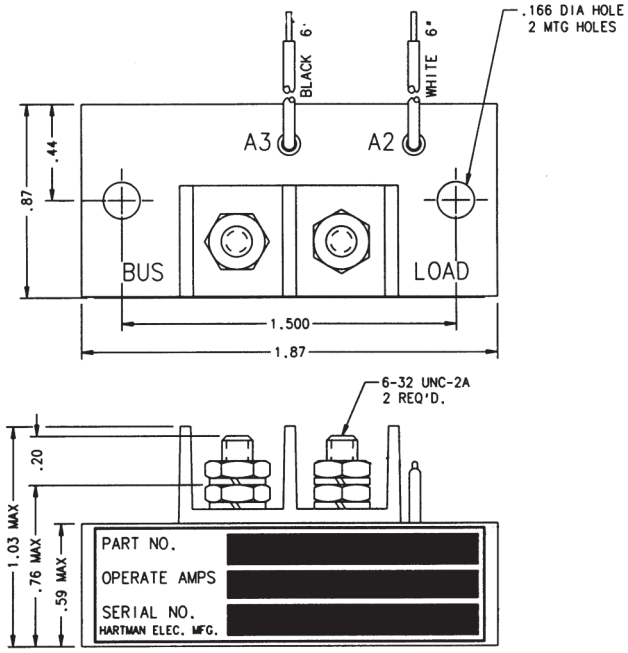

Mounting Style A

Circuit Configurations (Consult factory for other available circuit configurations)

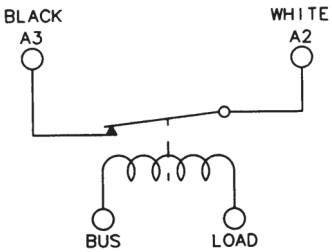

Circuit Configuration 1

HARTMAN Part Number	Construction Type	Mounting Style	Duty Cycle	Circuit Config.	TE Part Number
Q-50Y	Environmentally Sealed	A	Continuous	1	1-1616131-2

For factory-direct application assistance, phone 419-521-9500 or fax 419-526-2749.

Catalog 5-1773450-5
Revised 3-13

www.te.com

Dimensions are shown for reference purposes only. Specifications subject to change.

Dimensions are in millimeters unless otherwise specified.

USA: +1 800 522 6752
Asia Pacific: +86 0 400 820 6015
UK: +44 800 267 666

For additional support numbers please visit www.te.com

Q-50 Series Relay, Current Indicator, Rated up to 3.5 Amps, 28 Vdc

Product Facts

- **SPDT**
- **Environmentally sealed**
- **Meets many requirements of MIL-PRF-6106**

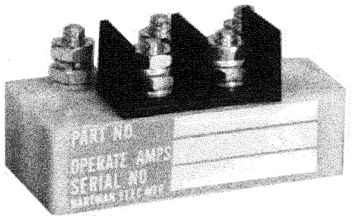

Performance Data

Electrical Characteristics

Contact Arrangement — SPDT

Contact Rating @ 28 Vdc — 0.25 Amp

Lamp Load @ 28 Vdc — 0.080 Amp

Rated Operating Voltage — 28 Vdc

Sensing Current Rating — 3.5 Amps, continuous

Pickup Max. — 2 Amp DC

Dropout Min. — 0.8 Amp

General Characteristics

Temperature Range — -55°C to +71°C

Altitude, Max. — 50,000 ft

Weight, Max. — 1.25 oz

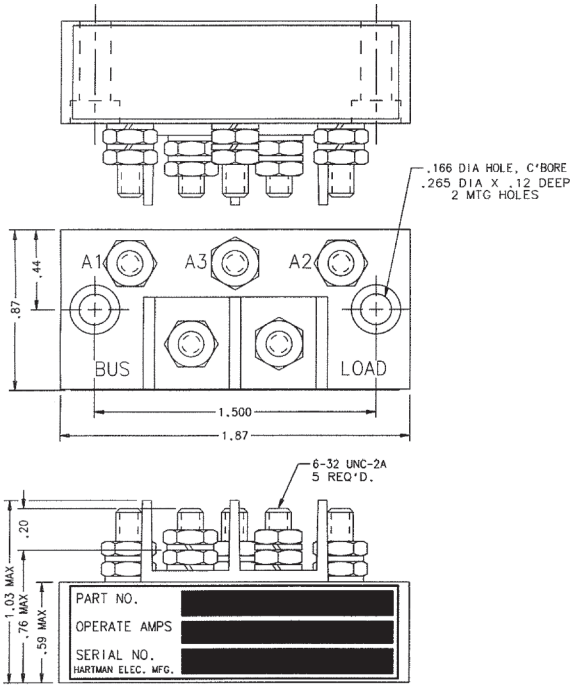

Mounting Style A

Circuit Configurations (Consult factory for other available circuit configurations)

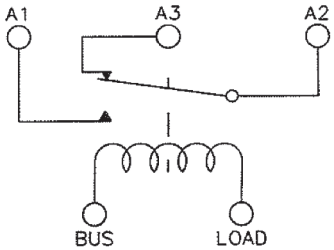

Circuit Configuration 1

HARTMAN Part Number	Construction Type	Mounting Style	Duty Cycle	Circuit Config.	TE Part Number
Q-50F	Environmentally Sealed	A	Continuous	1	1616131-9

For factory-direct application assistance, phone 419-521-9500 or fax 419-526-2749.

Catalog 5-1773450-5
Revised 3-13

www.te.com

Dimensions are shown for reference purposes only. Specifications subject to change.

Dimensions are in millimeters unless otherwise specified.

USA: +1 800 522 6752
Asia Pacific: +86 0 400 820 6015
UK: +44 800 267 666

For additional support numbers please visit www.te.com

Q-50 Series Relay, Current Indicator, Rated up to 6.25 Amps, 28 Vdc

Product Facts

- **SPDT**
- **Environmentally sealed**
- **Meets many requirements of MIL-PRF-6106**

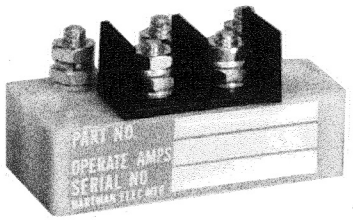

Performance Data

Electrical Characteristics

Contact Arrangement — SPST NC

Contact Rating @ 28 Vdc — 0.25 Amp

Rated Operating Voltage — 28 Vdc

Sensing Current Rating — 6.25 Amps, continuous

Lamp Load — 0.080 Amp

Pickup Max. —
Q50BB – 2.5 Amps DC
Q50BD - 2.0 Amps DC
Q50E - 3.5 Amps DC

Dropout Min. —
Q50BD - 0.8 Amps DC
Q50BB - 1.0 Amps DC
Q50E - 1.4 Amps DC

General Characteristics

Temperature Range — -55°C to +71°C

Altitude, Max. — 50,000 ft

Weight, Max. — 1.25 oz

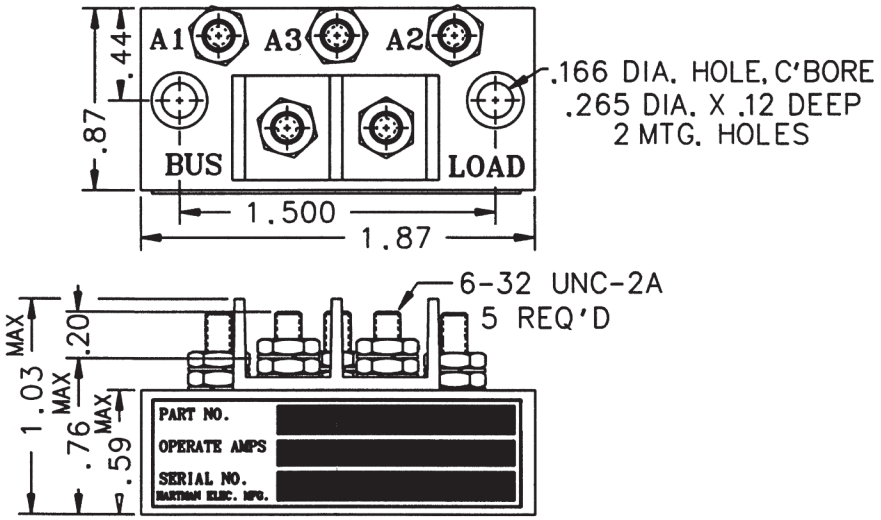

Mounting Style A

Circuit Configurations
(Consult factory for other available circuit configurations)

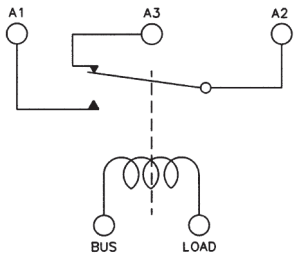

Circuit Configuration 1

HARTMAN Part Number	Construction Type	Mounting Style	Coil Type	Circuit Config.	TE Part Number
Q-50BB	Environmentally Sealed	A	Continuous	1	1616131-5
Q-50E	Environmentally Sealed	A	Continuous	1	1616131-8
Q-50BD	Environmentally Sealed	A	Continuous	1	1616131-6

For factory-direct application assistance, phone 419-521-9500 or fax 419-526-2749.

Catalog 5-1773450-5
Revised 3-13

www.te.com

Dimensions are shown for reference purposes only. Specifications subject to change.

Dimensions are in millimeters unless otherwise specified.

USA: +1 800 522 6752
Asia Pacific: +86 0 400 820 6015
UK: +44 800 267 666

For additional support numbers please visit www.te.com

Q-50 Series Relay, Current Indicator, Rated up to 10 Amps, 28 Vdc

Product Facts

- **SPST NO**
- **Environmentally sealed**
- **Meets many requirements of MIL-PRF-6106**

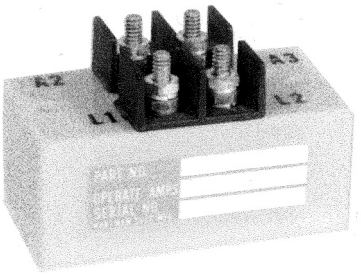

Performance Data

Electrical Characteristics

Contact Arrangement — SPST NO

Contact Rating @ 28 Vdc — 0.25 Amp

Lamp Load @ 28 Vdc — 0.08 Amp

Rated Operating Voltage — 28 Vdc

Sensing Current Rating — 20 Amps, continuous, max.

Pickup Max. — 3.5 Amps DC

Dropout Min. — 0.5 Amp

General Characteristics

Temperature Range — -55°C to +71°C

Altitude, Max. — 50,000 ft

Weight, Max. — 1.25 oz

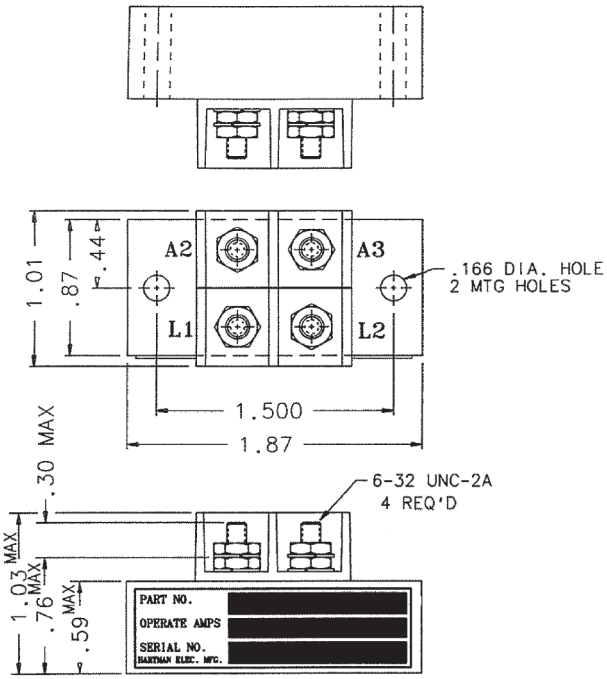

Mounting Style A

Circuit Configurations (Consult factory for other available circuit configurations)

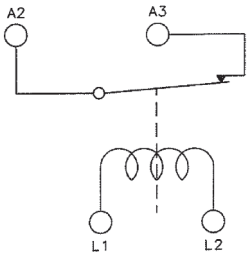

Circuit Configuration 1

HARTMAN Part Number	Construction Type	Mounting Style	Duty Cycle	Circuit Config.	TE Part Number
Q-50A	Environmentally Sealed	A	Continuous	1	1616131-1

For factory-direct application assistance, phone 419-521-9500 or fax 419-526-2749.

Catalog 5-1773450-5
Revised 3-13

www.te.com

Dimensions are shown for reference purposes only. Specifications subject to change.

Dimensions are in millimeters unless otherwise specified.

USA: +1 800 522 6752
Asia Pacific: +86 0 400 820 6015
UK: +44 800 267 666

For additional support numbers please visit www.te.com

Q-50 Series Relay, Current Indicator, Rated up to 15 Amps, 28 Vdc

Product Facts

- **SPDT**
- **Environmentally sealed**
- **Meets many requirements of MIL-PRF-6106**

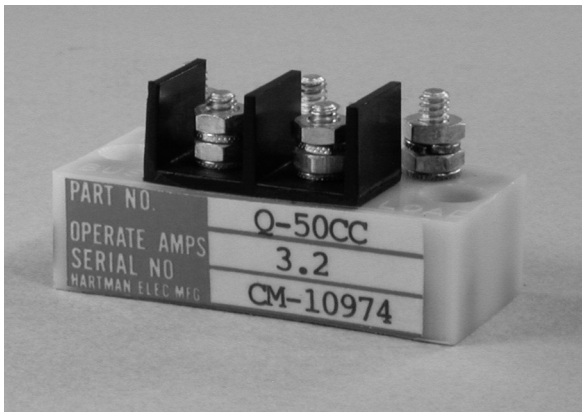

Performance Data

Electrical Characteristics

Contact Arrangement — SPDT

Contact Rating @ 28 Vdc — 0.25 Amp

Lamp Load @ 28 Vdc — 0.10 Amp

Rated Operating Voltage — 28 Vdc

Sensing Current Rating — 15 Amps DC, continuous, max.

Pickup Max. — 3.2 Amps DC

Dropout Min. — 1.2 Amps

General Characteristics

Temperature Range — -55°C to +85°C

Altitude, Max. — 50,000 ft

Weight, Max. — 1.25 oz

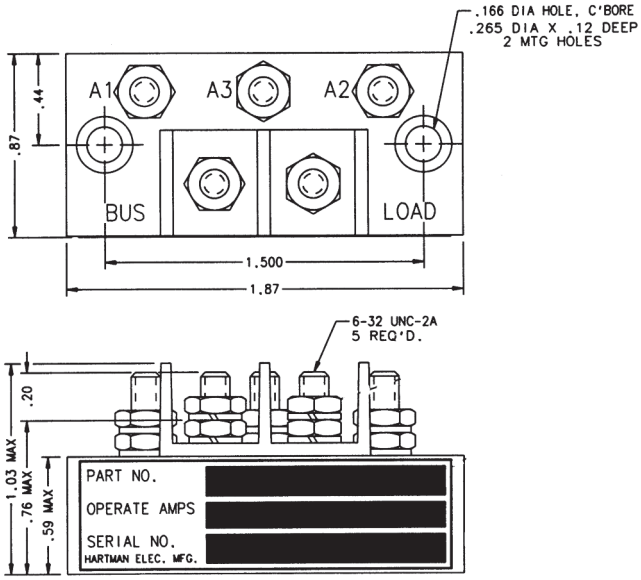

Mounting Style A

Circuit Configurations (Consult factory for other available circuit configurations)

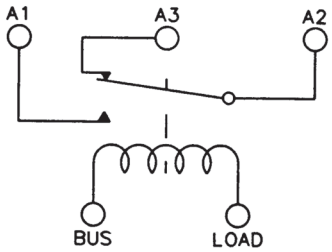

Circuit Configuration 1

HARTMAN Part Number	Construction Type	Mounting Style	Duty Cycle	Circuit Config.	TE Part Number
Q-50CC	Environmentally Sealed	A	Continuous	1	1616131-7

For factory-direct application assistance, phone 419-521-9500 or fax 419-526-2749.

Catalog 5-1773450-5
Revised 3-13

www.te.com

Dimensions are shown for reference purposes only. Specifications subject to change.

Dimensions are in millimeters unless otherwise specified.

USA: +1 800 522 6752
Asia Pacific: +86 0 400 820 6015
UK: +44 800 267 666

For additional support numbers please visit www.te.com

Q-50 Series Relay, Current Indicator, Rated up to 16 Amps, 28 Vdc

Product Facts

- **SPST NC**
- **Environmentally sealed**
- **Meets many requirements of MIL-PRF-6106**

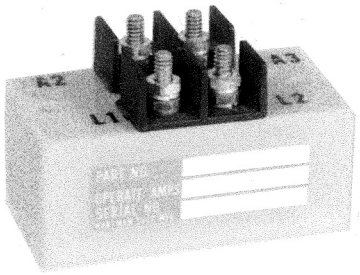

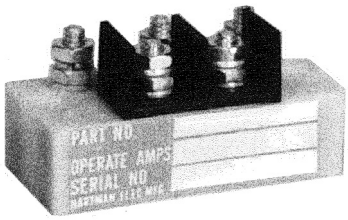

Performance Data

Electrical Characteristics

Contact Arrangement —
Q50S - SPST NC
Q50Z - SPDT

Contact Rating @ 28 Vdc —
0.25 Amp

Lamp Load @ 28 Vdc —
0.10 Amp

Rated Operating Voltage — 28 Vdc

Sensing Current Rating — 16 Amps DC, continuous, max.

Pickup Max. — 3 Amps DC

Dropout Min. — 1.2 Amps

General Characteristics

Temperature Range —
-55°C to +71°C

Altitude, Max. — 50,000 ft

Weight, Max. — 1.25 oz

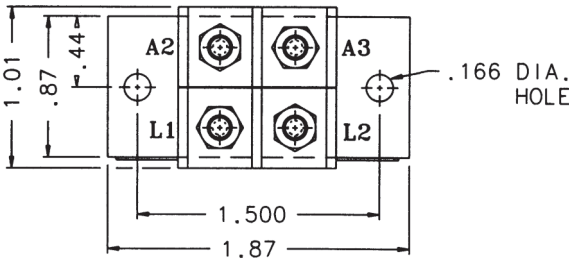

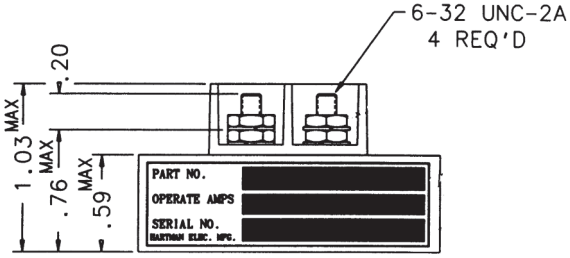

Mounting Style A

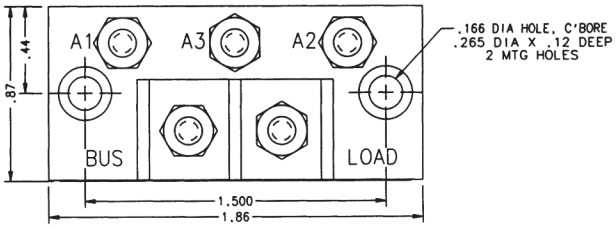

Circuit Configurations (Consult factory for other available circuit configurations)

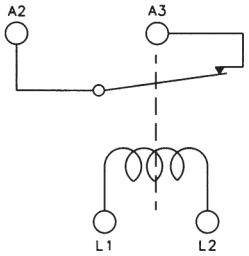

Circuit Configuration 1

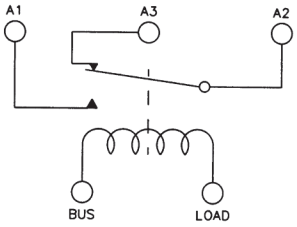

Circuit Configuration 1

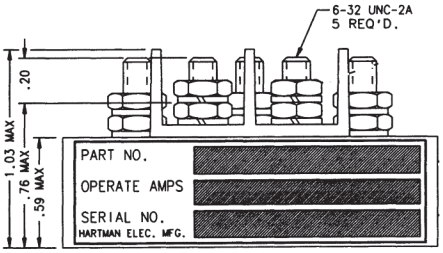

Mounting Style B

HARTMAN Part Number	Construction Type	Mounting Style	Duty Cycle	Circuit Config.	TE Part Number
Q-50S	Environmentally Sealed	A	Continuous	1	1-1616131-1
Q-50Z	Environmentally Sealed	A	Continuous	2	1-1616131-3

For factory-direct application assistance, phone 419-521-9500 or fax 419-526-2749.

Catalog 5-1773450-5
Revised 3-13

www.te.com

Dimensions are shown for reference purposes only. Specifications subject to change.

Dimensions are in millimeters unless otherwise specified.

USA: +1 800 522 6752
Asia Pacific: +86 0 400 820 6015
UK: +44 800 267 666

For additional support numbers please visit www.te.com

Q-50 Series Relay, Current Indicator, Rated up to 20 Amps, 28 Vdc

Product Facts

- **SPST NC or SPST NO**
- **Environmentally sealed**
- **Meets many requirements of MIL-PRF-6106**

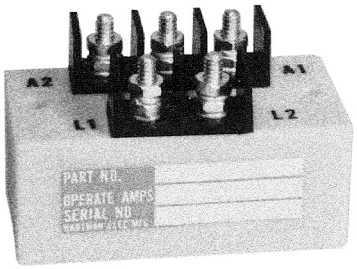

Performance Data

Electrical Characteristics

Contact Arrangement —
SPST NC, SPST NO or SPDT

Contact Rating @ 28 Vdc —
Q-50AB-2 — 0.2 Amp
Q-50J, — 0.25 Amp
Q-50AG — 1.0 Amp
Q-50AB-1 — 1 Amp switching, and 2 Amps carry

Q50AC — 2 Amp

Lamp Load @ 28 Vdc —
Q-50AC, Q-50AB-2 — 0.08 Amp
Q-50J, Q-50AG — 0.20 Amp

Operating Voltage, Nom. — 28 Vdc

Sensing Current Rating —
20 Amps continuous, max. except for Q-50AB-1 and Q-50AB-2 which are 10 Amps max. and 15 Amps max. for 3 sec.

Q50AC 2 Amps continuous 10 Amps max. for 5 seconds

Pickup Max. —
Q-50AC — 0.3 Amp
Q-50AB-1, Q-50AB-2 — 1.5 Amp
Q-50J — 3.5 Amps DC
Q-50AG — 6 Amps DC ± 20%

Dropout Min. —
Q-50AC — 0.1 Amp
Q-50J — 0.5 Amp
Q-50AB-1, Q-50AB-2 — less than 1 Amp
Q-50AG — 2.4 Amp

General Characteristics

Temperature Range —
-55°C to +71°C

Altitude, Max. —
Q-50J, Q-50AB-1 — 50,000 ft
Q-50AC, Q-50AG, Q-50AB-2 — 60,000 ft

Weight, Max. — 1.25 oz

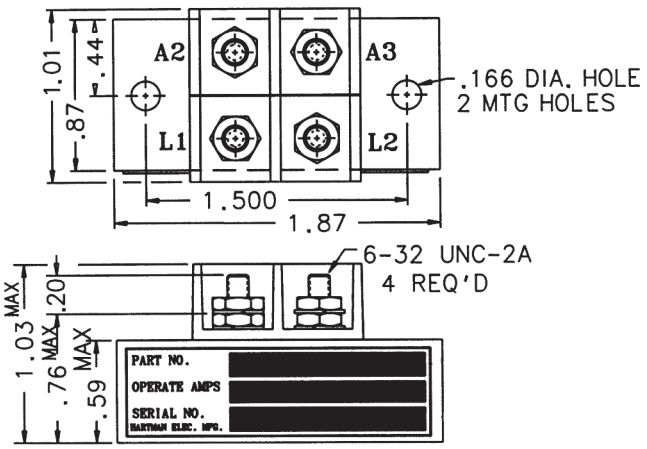

Mounting Style A

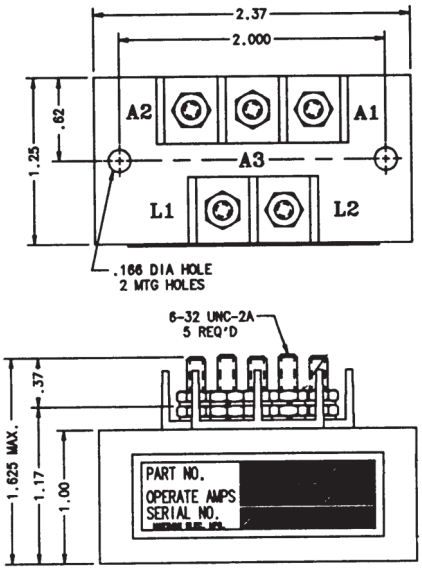

Mounting Style B

For factory-direct application assistance, phone 419-521-9500 or fax 419-526-2749.

Catalog 5-1773450-5
Revised 3-13

www.te.com

Dimensions are shown for reference purposes only. Specifications subject to change.

Dimensions are in millimeters unless otherwise specified.

USA: +1 800 522 6752
Asia Pacific: +86 0 400 820 6015
UK: +44 800 267 666

For additional support numbers please visit www.te.com

Q-50 Series Relay, Current Indicator, Rated up to 20 Amps, 28 Vdc (Continued)

Circuit Configurations (Consult factory for other available circuit configurations)

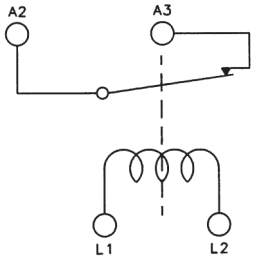

Circuit Configuration 1

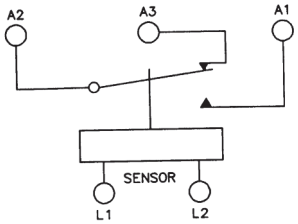

Circuit Configuration 2

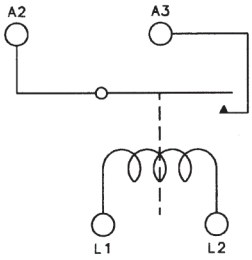

Circuit Configuration 3

HARTMAN Part Number	Construction Type	Mounting Style	Duty Cycle	Circuit Config.	TE Part Number
Q-50J	Environmentally Sealed	A	Continuous	1	1-1616131-0
Q-50AC	Environmentally Sealed	B	Continuous	2	1616131-4
Q-50AG	Environmentally Sealed	A	Continuous	1	1616540-7
Q-50AB-1	Environmentally Sealed	A	Continuous	1	1616131-2
Q-50AB-2	Environmentally Sealed	A	Continuous	3	1616131-3

For factory-direct application assistance, phone 419-521-9500 or fax 419-526-2749.

QR-50 Series Relay, AC Current Indicator, Rated up to 5 Amps, 115 VAC

Product Facts

- **SPST NC**
- **Environmentally sealed**
- **Meets many requirements of MIL-PRF-6106**

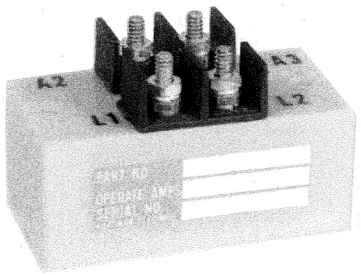

Performance Data

Electrical Characteristics

Contact Arrangement — SPST NC

Resistive Rating @ 28 Vdc — .25 Amp

Lamp Load @ 28 Vdc — .10 Amp

Sensing Current Rating — 5 Amp, AC continuous

General Characteristics

Temperature Range — -55°C to +85°C

Altitude — 50,000 ft

Weight, Max. — .25 lbs

Operating Voltage, Nom. — 115 Vrms, 325-600 Hz

Pickup Max. — 95 MA, AC

Dropout Min. — 47 MA AC

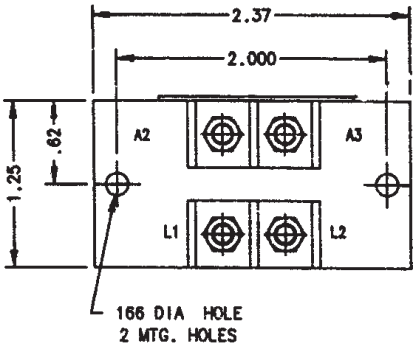

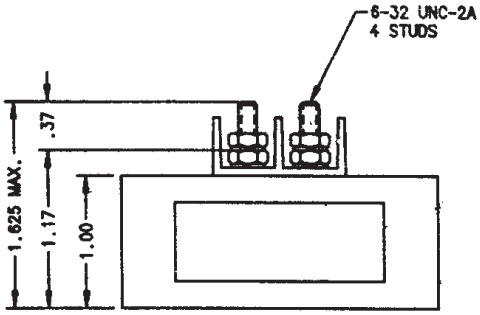

Mounting Style A

Circuit Configurations (Consult factory for other available circuit configurations)

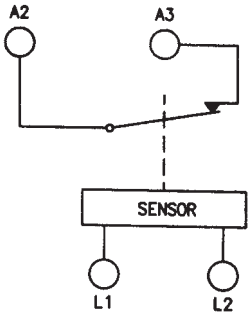

Circuit Configuration 1

HARTMAN Part Number	Construction Type	Mounting Style	Duty Cycle	Circuit Config.	TE Part Number
QR-50V	Environmentally Sealed	A	Continuous	1	1616132-3

For factory-direct application assistance, phone 419-521-9500 or fax 419-526-2749.

Catalog 5-1773450-5
Revised 3-13

www.te.com

Dimensions are shown for reference purposes only. Specifications subject to change.

Dimensions are in millimeters unless otherwise specified.

USA: +1 800 522 6752
Asia Pacific: +86 0 400 820 6015
UK: +44 800 267 666

For additional support numbers please visit www.te.com

QR-50 Series Relay, AC Current Indicator, Rated up to 15 Amps, 115 VAC

Product Facts

- **SPDT**
- **Environmentally sealed**
- **Meets many requirements of MIL-PRF-6106**

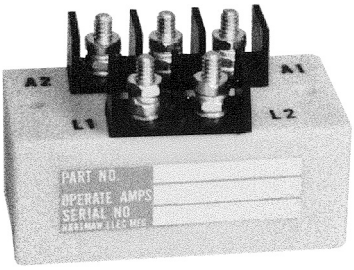

Performance Data

Electrical Characteristics

Contact Arrangement — SPDT

Resistive Rating @ 28 Vdc — .25 Amp

Lamp Load @ 28 Vdc — .08 Amp

Operating Voltage, Nom. — 115 VAC, 1 Phase, 400 Hz

Pickup Max. — 6 Amp, AC

Dropout Min. — 2.4 Amp, AC

Sensing Current Rating — 15 Amp, AC Continuous

General Characteristics

Temperature Range — -55°C to +71°C

Altitude — 50,000 ft

Weight, Max. — .19 lbs

Sinusoidal Vibration — 10 G to 500 Hz

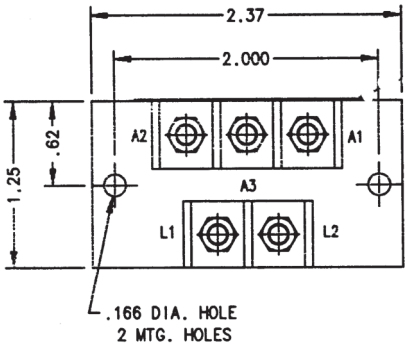

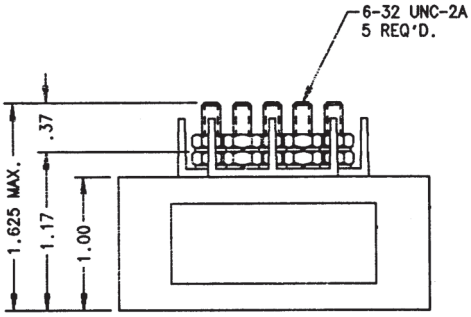

Mounting Style A

Circuit Configurations (Consult factory for other available circuit configurations)

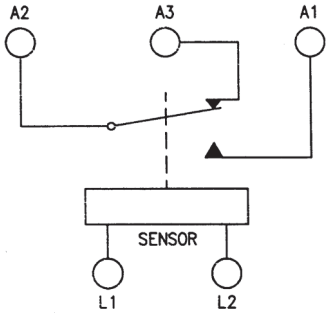

Circuit Configuration 1

HARTMAN Part Number	Construction Type	Mounting Style	Duty Cycle	Circuit Config.	TE Part Number
QR-50H	Environmentally Sealed	A	Continuous	1	1616132-1

For factory-direct application assistance, phone 419-521-9500 or fax 419-526-2749.

Catalog 5-1773450-5
Revised 3-13

www.te.com

Dimensions are shown for reference purposes only. Specifications subject to change.

Dimensions are in millimeters unless otherwise specified.

USA: +1 800 522 6752
Asia Pacific: +86 0 400 820 6015
UK: +44 800 267 666

For additional support numbers please visit www.te.com

E-316C Series Relay, Undervoltage AC 3 Phase, Lowest of 3

Product Facts

- **DPDT**
- **Gasket sealed**
- **Meets many requirements of MIL-PRF-6106**

Performance Data

Electrical Characteristics

Contact Arrangement — DPDT

Resistive Rating @ 28 Vdc — 10 Amps

Inductive Rating — 5 Amps

Lamp Load — 1.5 Amps

Rated Operating Voltage, Nom. — 115 V, 400 Hz

Pickup Voltage (All 3 Phases Up) — 85-90 Volts

Dropout Voltage (3 Phase — Lowest of 3) — 75-80 Volts

General Characteristics

Temperature Range — -55°C to +71°C

Operating Cycles (Life) at Rated Resistive Load, Min. — 10,000 cycles

Weight, Max. — 10 oz.

Operating Voltage, Max. — 124 VAC

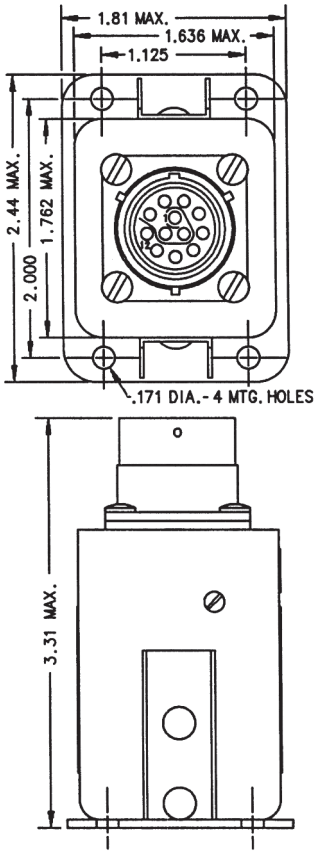

Mounting Style A

Circuit Configurations

(Consult factory for other available circuit configurations)

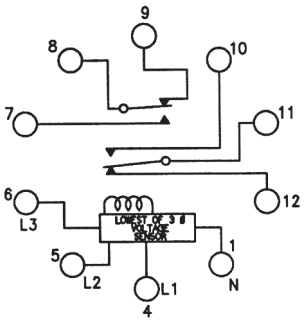

Circuit Configuration 1

For factory-direct application assistance, phone 419-521-9500 or fax 419-526-2749.

HARTMAN Part Number	Construction Type	Mounting Style	Duty Cycle	Circuit Config.	TE Part Number
E-316C	Gasket/Vented	A	Continuous	1	1-1616126-4

Catalog 5-1773450-5
Revised 3-13

www.te.com

Dimensions are shown for reference purposes only. Specifications subject to change.

Dimensions are in millimeters unless otherwise specified.

USA: +1 800 522 6752
Asia Pacific: +86 0 400 820 6015
UK: +44 800 267 666

For additional support numbers please visit www.te.com

E-311PB Series Relay, Undervoltage with Time Delay

Product Facts

- **2PDT**
- **Solder sealed, hermetically sealed**
- **Meets many requirements of MIL-PRF-6106**

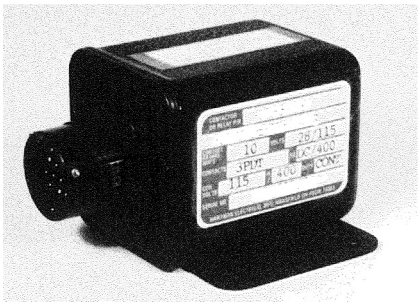

Performance Data

Electrical Characteristics

Main Contacts —

Contact Arrangement — 2PDT

Operating Voltage, Nom. — 28 Vdc

Resistive Rating — 10 Amps

Inductive Rating — 6 Amps

Motor Rating — 3 Amps

Lamp Rating — 1 Amps

Pickup Time, Max. — 125 msec

Contact Bounce, Max. — 3 msec

Operating Voltage, Max. — 36 Vdc

Operating Voltage, Nom. — 28 Vdc

Pickup Voltage — 24.5 ± 0.5 Vdc

Dropout Voltage — 21.5 ± 0.5 Vdc

Dropout Time Delay — 200-400 milliseconds when the relay is in the energized position and the voltage drops below 21.5 ± 0.5 Vdc and above 15 Vdc. The relay will remain energized for 200 to 400 milliseconds before de-energizing when the voltage drops below 15 Vdc. Time delay is 30 Ms max.

Operating Current, Max. @ 25°C — 150 milliamp

General Characteristics

Ambient Temperature Range — -55°C to +85°C

Operating Cycles (Life) at Rated Resistive Load, Min. — 100,000 cycles

Dielectric Withstanding Voltage — 1,000 Vrms, 60 Hz, 1 mil/Amp max. leakage

Insulation Resistance @ 500 Vdc — 100 megohm min.

Altitude — 80,000 ft

Weight, Max. — .25 lbs

Sinusoidal Vibration — .060 DA @ 5 to 80 Hz
20 G ™ 80 to 2000 Hz

Shock for 11 msec, 1/2 Sine, 3 Axes — 30 G

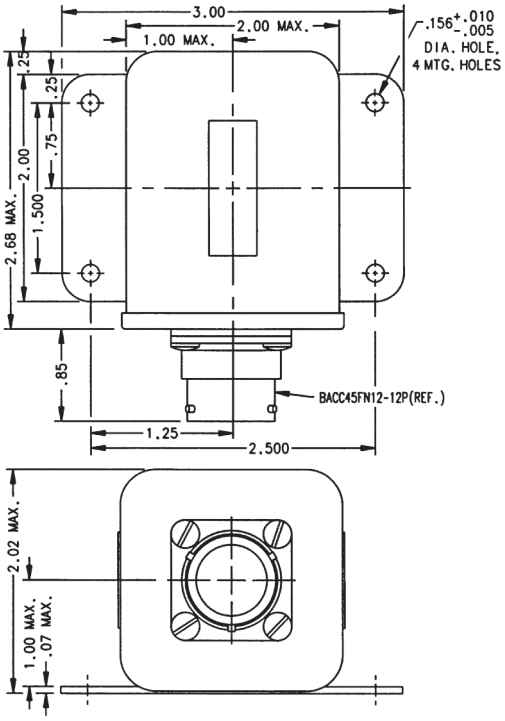

Mounting Style A

Circuit Configurations (Consult factory for other available circuit configurations)

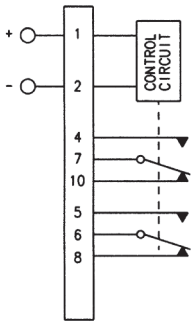

Circuit Configuration 1

HARTMAN Part Number	Construction Type	Mounting Style	Duty Cycle	Circuit Config.	TE Part Number
E-311PB	Hermetically Sealed	A	Continuous	1	1-1616126-1

For factory-direct application assistance, phone 419-521-9500 or fax 419-526-2749.

Catalog 5-1773450-5
Revised 3-13

www.te.com

Dimensions are shown for reference purposes only. Specifications subject to change.

Dimensions are in millimeters unless otherwise specified.

USA: +1 800 522 6752
Asia Pacific: +86 0 400 820 6015
UK: +44 800 267 666

For additional support numbers please visit www.te.com

E-329 Series Relay, Voltage Sensing

Product Facts

- **3PDT**
- **Solder sealed cover, hermetically sealed contacts**
- **Meets many requirements of MIL-PRF-6106**

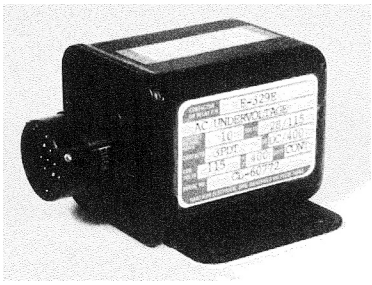

Performance Data

Electrical Characteristics

Contact Arrangement — 3PDT
Rated Operating Voltage — 28 Vdc, and 155 Vac 400 Hz
Resistive Rating — 10 Amps
Inductive Rating — 8 Amps
Motor Rating — 4 Amps
Lamp Rating — 2 Amps
Pickup Time, Max. — 70 msec
Contact Bounce, Max. — 3 msec
Dropout Time Delay — 200-400 msec when the relay is in the energized position and the voltage drops below 104 ± 2 Vrms and above 88 ±4 Vrms. The relay will remain energized for 200-400 msec before deenergizing. When the voltage drops below 88 ±4 Vrms no time delay is required. When the voltage drops to 30 volts or less the relay will de-energize 50 msec max.
Operating Voltage, Nom. — 115 VAC, RMS L-N
Operating Voltage, Max. — 122 VAC, RMS L-N
Operating Frequency — 400 ±20 Hz
Pickup Voltage — 109 ±2 Vrms
Dropout Voltage — 104 ±2 Vrms
Operating Current, Max. @ 25°C — 100 milliamp

General Characteristics

Temperature Range — -55°C to +85°C
Operating Cycles (Life) at Rated Resistive Load, Min. — 100,000 cycles
Operating Cycles (Life) Mechanical, Min. — 100,000 cycles
Dielectric Withstanding Voltage — 1,000 Vrms, 60 Hz
Insulation Resistance @ 500 Vdc — 1,000 megohm min.
Altitude — 0-80,000 ft
Weight, Max. — 10 oz
Shock for 11 msec, 1/2 Sine, 3 Axis — 30 G

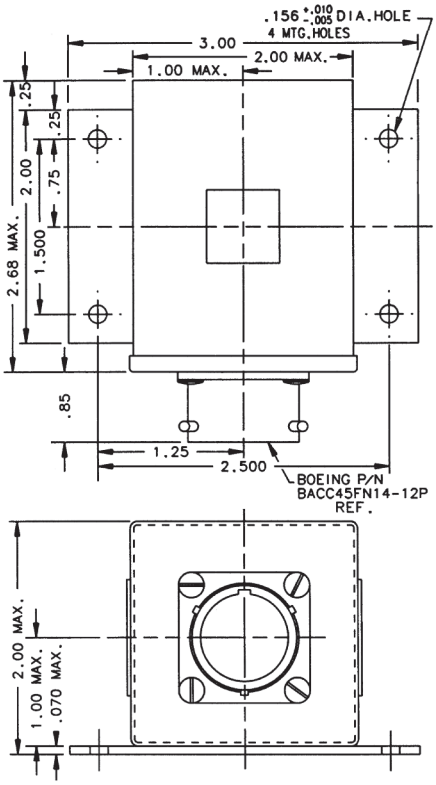

Mounting Style A

Circuit Configurations (Consult factory for other available circuit configurations)

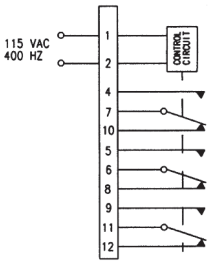

Circuit Configuration 1

HARTMAN Part Number	Construction Type	Mounting Style	Duty Cycle	Circuit Config.	TE Part Number
E-329E	Hermetically Sealed	A	Continuous	1	1-1616126-9

For factory-direct application assistance, phone 419-521-9500 or fax 419-526-2749.

Catalog 5-1773450-5
Revised 3-13

www.te.com

Dimensions are shown for reference purposes only. Specifications subject to change.

Dimensions are in millimeters unless otherwise specified.

USA: +1 800 522 6752
Asia Pacific: +86 0 400 820 6015
UK: +44 800 267 666

For additional support numbers please visit www.te.com

RA-3100 Series Remote Power Controller, Rated up to 60 Amps, 115/208 VAC

Product Facts

- 3PST NO
- Gasket sealed

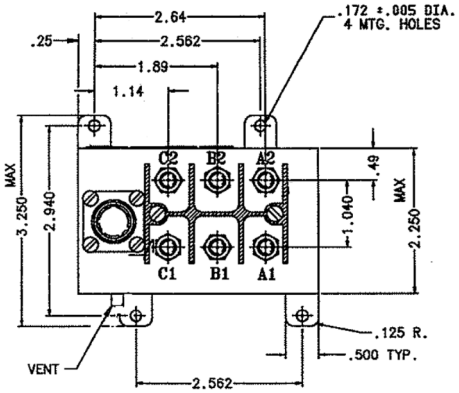

Performance Data

Electrical Characteristics

Contact Arrangement — 3PST NO

Rated Operating Voltage — 115/208 VAC, 400-610 Hz, 3 phase

Resistive Rating — 50 Amp

Motor Rating — 30 Amp

Rupture Rating — 1000 Amp

Closing Time, Max., Override at 28 Vdc — 35 msec

Opening Time, Max., Override at 28 Vdc — 25 msec

Contact Bounce, Max. — 3 msec

Coil Characteristics

Duty Cycle — Continuous, economizing

Operating Voltage, Max. — 32 Vdc

Operating Voltage @ 85°C, Min. — 18 Vdc

Trip Time @ 60 Amp Current +10% — 2.0 to 3.0 sec

Trip Time @ 75 Amp Current +10% — 1.0 to 1.9 sec

Trip Time @ 95 Amp Current +10% — .2 to .9 sec

Trip Time @ 200+ Amp Current +10% — 0.01 to 0.1 sec

General Characteristics

Temperature Range — -55°C to +85°C

Operating Cycles (Life) Mechanical, Min. — 100,000 cycles

Altitude — 50,000 ft

Weight, Max. — 1.55 lbs

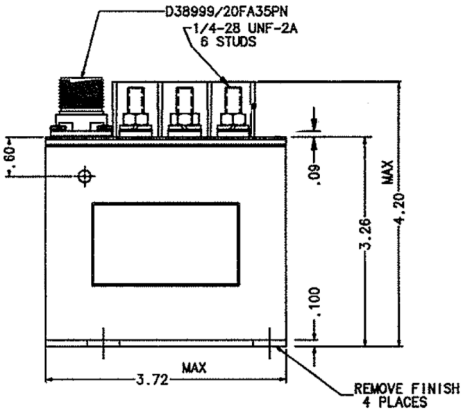

Mounting Style A

Circuit Configurations (Consult factory for other available circuit configurations)

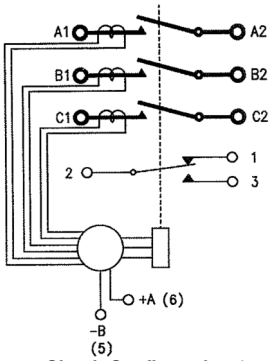

Circuit Configuration 1

HARTMAN Part Number	Construction Type	Mounting Style	Coil Type	Circuit Config.	TE Part Number
RA-3100H	Gasket/Vented	A	Continuous, Economizing	1	1616539-3

For factory-direct application assistance, phone 419-521-9500 or fax 419-526-2749.

Catalog 5-1773450-5
Revised 3-13

www.te.com

Dimensions are shown for reference purposes only. Specifications subject to change.

Dimensions are in millimeters unless otherwise specified.

USA: +1 800 522 6752
Asia Pacific: +86 0 400 820 6015
UK: +44 800 267 666

For additional support numbers please visit www.te.com

RA-3100 Series Remote Power Controller, Rated up to 70 Amps, 115/208 VAC

Product Facts

- **3PST NO**
- **Gasket sealed**

Performance Data

Electrical Characteristics

Contact Arrangement — 3PST NO

Rated Operating Voltage — 115/208 VAC, 400-610 Hz, 3 phase

Resistive Rating — 70 Amp

Motor Rating — 70 Amp

Rupture Rating — 1,000 Amp

Coil Characteristics

Duty Cycle — Continuous, economizing

Operating Voltage, Max. — 32 Vdc

Operating Voltage @ 85°C, Min. — 18 Vdc

Trip Time @ 70 Amp Current +10% — 3.0 to 5.0 sec

Trip Time @ 87 Amp Current +10% — 2.0 to 2.9sec

Trip Time @ 111 Amp Current +10% — 1.0 to 1.8 sec

Trip Time @ 200 Amp Current +10% — 0.25 to 0.5 sec

General Characteristics

Operating Temperature Range — -55°C to +85°C

Altitude — 50,000 ft max.

Weight, Max. — 1.55 lb

Sinusoidal Vibration — .038 DA from 10 to 50 Hz
10g from 55 to 2000 Hz

Shock, Max. — 9 G max for 10-12 ms

Load, Min. — 50,000 cycles

Operating Cycles (Life)

Mechanical, Min. — 100,000 cycles

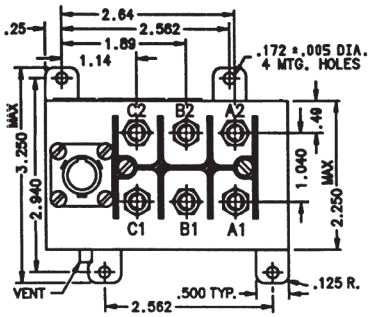

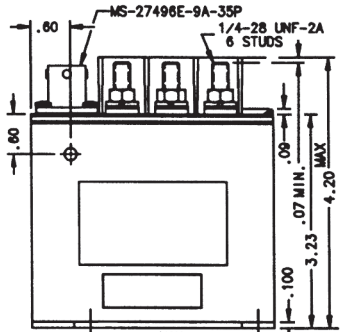

Mounting Style A

Circuit Configurations (Consult factory for other available circuit configurations)

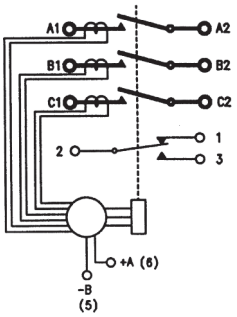

Circuit Configuration 1

HARTMAN Part Number	Construction Type	Mounting Style	Coil Type	Circuit Config.	TE Part Number
RA-3100F	Gasket/Vented	A	Continuous, Economizing	1	1616133-2

For factory-direct application assistance, phone 419-521-9500 or fax 419-526-2749.

Catalog 5-1773450-5
Revised 3-13

www.te.com

Dimensions are shown for reference purposes only. Specifications subject to change.

Dimensions are in millimeters unless otherwise specified.

USA: +1 800 522 6752
Asia Pacific: +86 0 400 820 6015
UK: +44 800 267 666

For additional support numbers please visit www.te.com

RA-3100 Series Remote Power Controller, Rated up to 100 Amps, 115/208 VAC

Product Facts

- **3PST NO**
- **Gasket sealed**
- **Auxiliary contacts available**
- **Meets many requirements of MIL-PRF-6106**

Performance Data

Electrical Characteristics

Contact Arrangement — 3PST NO

Rated Operating Voltage — 115/208 VAC, 400-610 Hz, 3 phase

Resistive Rating — 100 Amp

Motor Rating — 100 Amp

Rupture Rating — 1,000 Amp

Closing Time, Max., at 28 Vdc — 35 msec

Opening Time, Max., at 28 Vdc — 25 msec

Contact Bounce, Max. — 3 msec

Coil Characteristics

Duty Cycle — Continuous, economizing

Operating Voltage, Max. — 32 Vdc

Operating Voltage @ 85°C, Min. — 18 Vdc

Coil Current, Inrush Max.@ 25°C — 6.0 Amps

Coil Current, Hold Max.@ 25°C — 0.5 Amps

Trip Time @ 28 Amp Current +10% — RA-3100M - 1.0 to 1.50 sec

Trip Time @ 151 Amp Current +10% —RA-3100D - 3.0 to 5.0 Sec.

Trip Time @ 185 Amp Current +10% —RA-3100D - 2 to 2.9 Sec.

Trip Time @ 237 Amp Current +10% —RA-3100D - 1 to 2.5 Sec.

General Characteristics

Temperature Range — -55°C to +85°C

Operating Cycles (Life) at Rated Load, Min. — 50,000 cycles

Operating Cycles (Life) Mechanical, Min. — 100,000 cycles

Altitude — 50,000 ft

Weight, Max. — 1.55 lbs

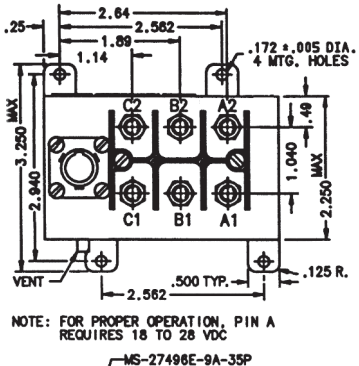

Mounting Style A

Circuit Configurations (Consult factory for other available circuit configurations)

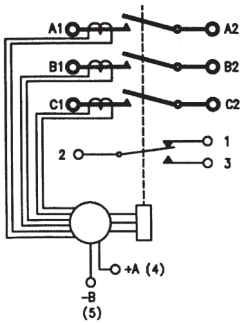

Circuit Configuration 1

HARTMAN Part Number	Construction Type	Mounting Style	Coil Type	Circuit Config.	TE Part Number
RA-3100D	Gasket/Vented	A	Continuous, Economizing	1	1616133-1
RA-3100M	Gasket/Vented	A	Continuous, Economizing	1	1616133-5

For factory-direct application assistance, phone 419-521-9500 or fax 419-526-2749.

Catalog 5-1773450-5
Revised 3-13

www.te.com

Dimensions are shown for reference purposes only. Specifications subject to change.

Dimensions are in millimeters unless otherwise specified.

USA: +1 800 522 6752
Asia Pacific: +86 0 400 820 6015
UK: +44 800 267 666

For additional support numbers please visit www.te.com

RA-3100 Series Remote Power Controller, Rated up to 110 Amps, 115/208 VAC

Product Facts

- **3PST NO**
- **Gasket sealed**
- **Auxiliary contacts available**
- **Meets many requirements of MIL-PRF-6106**

Performance Data

Electrical Characteristics

Contact Arrangement — 3PST NO

Rated Operating Voltage — 115/208 VAC, 400-610 Hz, 3 phase

Resistive Rating —
RA-3100J-1 - 110 Amp
RA-3100L - 50 Amp

Motor Rating —
RA-3100J01 - 110 Amp
RA-3100L - 50 Amp

Rupture Rating —
RA-3100J-1 - 1,100 Amp
RA-3100L 500 Amp

Shock for 10-12 msec — 50 G

Closing Time, Max., Override at 28 Vdc — 35 msec

Opening Time, Max., Override at 28 Vdc — 25 msec

Contact Bounce, Max. — 3 msec

Coil Characteristics

Duty Cycle — Continuous, economizing

Operating Voltage, Max. — 32 Vdc

Operating Voltage @ 85°C, Min. — 18 Vdc

Coil Current, Inrush Max.@ 25°C — 6.0 Amps

Coil Current, Hold Max.@ 25°C — 0.5 Amps

Trip Time @ 165 Amp Current +10% — 8.0 to 10.0 sec

Trip Time @ 330 Amp Current +10% —
RA-3100J-1 - 1.2 to 2.0 sec

Trip Time @ 550 Amp Current +10% —
RA-3100J-1 -0.34 to 0.65 sec

Trip Time @ 1100 Amp Current +10% —
RA-3100J-1 -0.07 to 0.20 sec

Trip Time @ 60 Amp Current +10% —
RA-3100L - 8.0 to 10.0 sec

Trip Time @ 150 Amp Current +10% —
RA-3100L - 4.0 to 6.0 sec

Trip Time @ 300 Amp Current +10% —
RA-3100L - 2.0 to 3.0 sec

Trip Time @ 500 Amp Current +10% —
RA-3100L - 0.07 to 0.20 sec

General Characteristics

Temperature Range —
-55°C to +85°C

Operating Cycles (Life) at Rated Load, Min. — 50,000 cycles

Operating Cycles (Life) Mechanical, Min. — 100,000 cycles

Altitude — 60,000 ft

Weight, Max. — 1.55 lbs

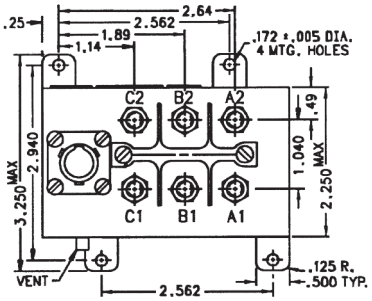

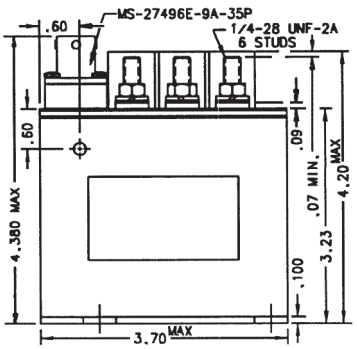

Mounting Style A

Circuit Configurations (Consult factory for other available circuit configurations)

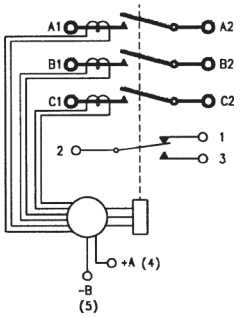

Circuit Configuration 1

HARTMAN Part Number	Construction Type	Mounting Style	Coil Type	Circuit Config.	TE Part Number
RA-3100J-1	Gasket/Vented	A	Continuous, Economizing	1	1616133-3
RA-3100L	Gasket/Vented	A	Continuous, Economizing	1	1616133-4

For factory-direct application assistance, phone 419-521-9500 or fax 419-526-2749.

Catalog 5-1773450-5
Revised 3-13

www.te.com

Dimensions are shown for reference purposes only. Specifications subject to change.

Dimensions are in millimeters unless otherwise specified.

USA: +1 800 522 6752
Asia Pacific: +86 0 400 820 6015
UK: +44 800 267 666

For additional support numbers please visit www.te.com

E-308TA Series, Undervoltage Sensor, Rated up to 10 Amps, 28 Vdc

Product Facts

- **DPDT**
- **Gasket sealed**
- **Meets many requirements of MIL-PRF-6106**

Performance Data

Electrical Characteristics

Contact Arrangement — DPDT
Operating Voltage, Nom. — 28 Vdc
Resistive Rating — 10 Amps
Inductive Rating — 2 Amps

General Characteristics

Operating Ambient Temperature Range — -55°F to +165°F
Altitude — 50,000 ft
Weight, Max. — 15.5 oz

Coil Characteristics

Duty Cycle — Continuous
Input to Sensor, Nom. — 120 V, 400 Hz
Operating Characteristic — Contacts A1-A2, B1-B2 will close if the AC input voltage is above 106 ± 2 VAC Contacts A1-A2, B1-B2 will open if the AC input voltage falls below 106 ± 2 VAC.

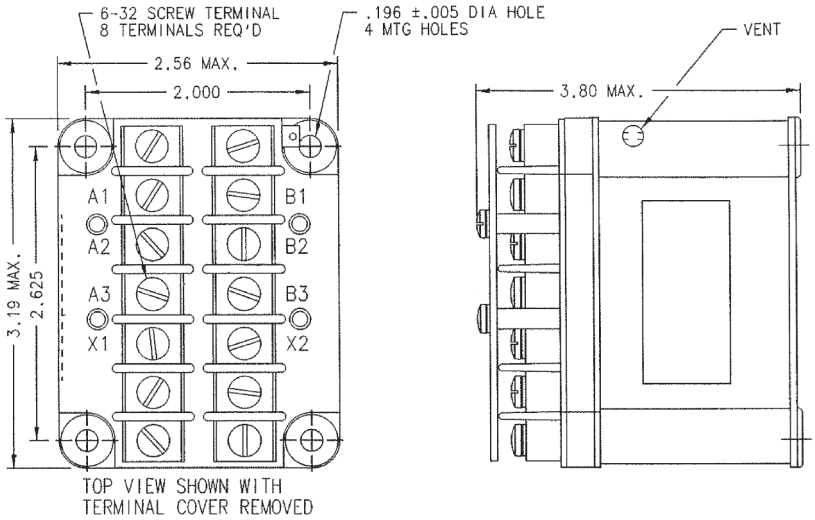

Mounting Style A

Circuit Configurations
(Consult factory for other available circuit configurations)

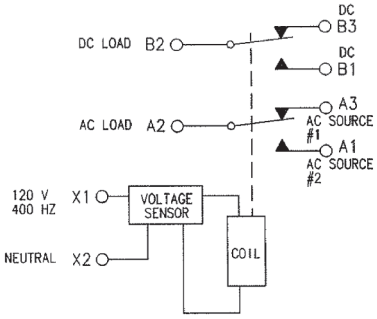

Circuit Configuration 1

HARTMAN Part Number	Construction Type	Mounting Style	Coil Type	Circuit Config.	TE Part Number
E-308TA	Gasket/Vented	A	Continuous	1	1616126-6

For factory-direct application assistance, phone 419-521-9500 or fax 419-526-2749.

Catalog 5-1773450-5
Revised 3-13

www.te.com

Dimensions are shown for reference purposes only. Specifications subject to change.

Dimensions are in millimeters unless otherwise specified.

USA: +1 800 522 6752
Asia Pacific: +86 0 400 820 6015
UK: +44 800 267 666

For additional support numbers please visit www.te.com

Cross Reference

Main Current Rating	AC/DC	Rating	Main Contact Config.	Operating Mode	Aux. Contact Config.	Coil Voltage (VDC)	Seal Type	Duty Cycle	Coil Trans. Voltage	Hartman Part No.	TE Part No.
10	DC	28	DPDT	Side Stable	—	115V	Gasket/Vented		Cont.	E-328-2	1-1616126-8
200	DC	28	SPST NO	Side Stable	SPST NC	24-30	Gasket/Vented		Cont.	A772XTB	1616545-1
25	AC	—	—	Side Stable	SPDT	28	Gasket/Vented		Cont.	E-387C-1	2-1616126-3
100	DC	28	SPST NO	Side Stable	SPST NC SPST NO.	28	Gasket/Vented		Cont.	A-700BU	1616109-6
200	DC	28	SPST NO	Side Stable	N/A	28	Gasket/Vented		Cont.	A-700AQ-4	1616109-4
300	DC	28	SPST NO	Side Stable	N/A	28	Gasket/Vented		Cont.	A-700AAP	1616109-1
		28	SPST NO	Side Stable	–	24-30	Gasket/Vented		Cont.	A-700ZC-7	1616109-7
		28	SPST NO	Side Stable	SPST NC	24-30	Gasket/Vented		Cont.	A-700ZG	1616109-9
400	DC	28	SPST NO	Side Stable	–	24-30	Gasket/Vented		Cont. Econ.	A-701D	1-1616109-1
		28	SPST NO	Side Stable	SPDT	24-30	Gasket/Vented		Cont. Econ.	A-701C	1-1616109-0
600	DC	28	SPST NO	Side Stable	–	28	Gasket/Vented		Cont.	A-702AAP	1-1616109-3
3	AC/DC	28/115	SPST NO	Side Stable	–	–	Gasket/Vented		–	B-188MA-1	1616114-7
600	DC	29	SPST NO	Side Stable	SPST NO	28	Gasket/Vented		Int.	A-711JF	1-1616109-6
		29	SPST NO	Side Stable	SPST NO	28	Gasket/Vented		Int.	A-711JM	1-1616109-7
		29	SPST NO	Side Stable	SPDT	28	Gasket/Vented		Int.	A-711Z	6-1616071-3
		29	SPST NO	Side Stable	–	28	Gasket/Vented		Int.	A-711R	1-1616109-8
200	DC	28	SPST NO	Side Stable	SPST NO SPST NC	24-30	Gasket/Vented		Cont.	A-957CSD	1616110-6
		28	SPST NO	Side Stable	SPST NO SPST NC	24-30	Gasket/Vented		Cont.	A-957G	1616110-8
300	DC	24/30	SPST NO	Side Stable	–	24-30	Gasket/Vented		Cont.	A-957E	1616110-7
350	DC	28	SPST NO	Side Stable	SPDT	24-30	Gasket/Vented		Cont.	A-957CA	1616110-5
2	DC	28	SPST NC	Side Stable	–	120	Environ		Cont.	Q-50Y	1-1616131-2
3.5	DC	28	SPDT	Side Stable	–	29	Environ		Cont.	Q-50F	1616131-9
6.25	DC	28	SPDT	Side Stable	–	28	Environ		Cont.	Q-50BB	1616131-5
		28	SPDT	Side Stable	–	28	Environ		Cont.	Q-50E	1616131-8
		28	SPDT	Side Stable	–	28	Environ		Cont.	Q-50BD	1616131-6
10	DC	28	SPST NO	Side Stable	–	28	Environ		Cont.	Q-50A	1616131-1
15	DC	28	SPDT	Side Stable	–	28	Environ		Cont.	Q-50CC	1616131-7
16	DC	28	SPDT	Side Stable	–	28	Environ		Cont.	Q-50S	1-1616131-1
	DC	28	SPDT	Side Stable	–	28	Environ		Cont.	Q-50Z	1-1616131-3
20	DC	28	SPST NC	Side Stable	–	28	Environ		Cont.	Q-50J	1-1616131-0
		28	SPST NO	Side Stable	–	28	Environ		Cont.	Q-50AC	1616131-4
		28	SPST NO	Side Stable	–	28	Environ		Cont.	Q-50AG	1616540-7
		28	SPST NC	Side Stable	–	28	Environ		Cont.	Q-50AB-1	1616131-2
		28	SPST NC	Side Stable	–	28	Environ		Cont.	Q-50AB-2	1616131-3
5	AC	115	SPST NC	Side Stable	–	115	Environ		Cont.	Q-50V	1616132-3
15	AC	115	SPDT	Side Stable	–	115	Environ		Cont.	QR-50H	1616132-1
10	DC	28	DPDT	Side Stable	–	–	Gasket/Vented		Cont.	E-316C	1-1616126-4
		28	3PDT	Side Stable	–	28	Hermetic		Cont.	E-311PB	1-1616126-1
		28	3PDT	Side Stable	–	115	Hermetic		Cont.	E-329E	1-1616126-9

For factory-direct application assistance, phone 419-521-9500 or fax 419-526-2749.

Catalog 5-1773450-5
Revised 3-13

www.te.com

Dimensions are shown for reference purposes only. Specifications subject to change.

Dimensions are in millimeters unless otherwise specified.

USA: +1 800 522 6752
Asia Pacific: +86 0 400 820 6015
UK: +44 800 267 666

For additional support numbers please visit www.te.com

Cross Reference (Continued)

Main Current Rating	AC/DC	Rating	Main Contact Config.	Operating Mode	Aux. Contact Config.	Coil Voltage (VDC)	Seal Type	Duty Cycle	Coil Trans. Voltage	Hartman Part No.	TE Part No.
100	AC	115/208	3PST NO	Side Stable	SPDT	18-32	Gasket/Vented	Cont.	Econ.	RA-3100M	1616133-5
		115/208	3PST NO	Side Stable	SPDT	18-32	Gasket/Vented	Cont.	Econ.	RA-3100D	1616133-1
110	AC	115/208	3PST NO	Side Stable	SPDT	18-32	Gasket/Vented	Cont.	Econ.	RA-3100J-1	1616133-3
50	AC	115/208	3PST NO	Side Stable	SPDT	18-32	Gasket/Vented	Cont.	Econ.	RA-3100L	1616133-4
60	AC	115/208	3PST NO	Side Stable	SPDT	18-32	Gasket/Vented	Cont.	Econ.	RA-3100H	1616539-3
70	AC	115/208	3PST NO	Side Stable	SPDT	18-32	Gasket/Vented	Cont.	Econ.	RA-3100F	1616133-2
10	DC	28	DPDT	Side Stable	–	120V	Gasket/Vented	Cont.		E-308TA	1616126-6

For factory-direct application assistance, phone 419-521-9500 or fax 419-526-2749.

Dimensions are shown for reference purposes only. Specifications subject to change.

Dimensions are in millimeters unless otherwise specified.

USA: +1 800 522 6752
Asia Pacific: +86 0 400 820 6015
UK: +44 800 267 666

For additional support numbers please visit www.te.com

Table of Contents

High Voltage DC Contactors
Quick Reference Guide 7-4, 7-5
MAP Aerospace Military Contactors
MAP101 Series 7-6, 7-7
MAP100 Series 7-8, 7-9
MAP200 Series 7-10, 7-11
MAP201 Series 7-12, 7-13
CAP Aerospace Commercial
CAP202 Series 7-14, 7-15
CAP200 Series 7-16, 7-17
CAP100 Series . . . . . 7-18 – 7-20
EV OEM/Commercial & Electric Vehicle
EV200A Series 7-21, 7-22
EV200B Series 7-23, 7-24
EV200P Series 7-25, 7-26
EV100 Series 7-27, 7-28
LEV Industrial Commercial
LEV100 Series . . . . . 7-29 – 7-31
LEV200 Series 7-32, 7-33

AC Contactors
FM200 Series 7-34, 7-35
AC30 Series 7-36

Traditional 270 Vdc Aerospace Contactors
AP90X Series 7-37, 7-38
AP150X Series 7-39
AP265X Series, AP265P Series 7-40
AP350X Series 7-41

Traditional 28 Vdc to 1800 Vdc Contactors
EV250 Series . . . . . 7-42 – 7-45
EV500 Series 7-46, 7-47
PD350X Series 7-48

High Voltage Relays
Quick Reference Guide 7-49, 7-50
270 Vdc Aerospace Relays
AP5A Series, AP5B Series, AP5C Series, AP5P Series, AP5R Series . . . . . 7-51 – 7-53
AP10A Series, AP10B Series, AP10P Series, AP11A Series . . . . . 7-51 – 7-53
AP44P Series 7-54

Catalog 5-1773450-5
Revised 3-13

www.te.com

Dimensions are shown for reference purposes only. Specifications subject to change.

Dimensions are in millimeters unless otherwise specified.

USA: +1 800 522 6752
Asia Pacific: +86 0 400 820 6015
UK: +44 800 267 666

For additional support numbers please visit www.te.com

Table of Contents (Continued)

High Voltage Relays (continued)

28 Vdc to 1800 Vdc Relays
- PD5A Series, PD5B Series, PD5C Series 7-55
- PD10A Series, PD10B Series, PD10P Series 7-56

1.5 - 2.0 kV Relay
- K45C Series 7-57

3.5 kV Relays
- HC-1 Series 7-58
- HC-3 Series 7-58
- HC-5 Series 7-58

5.0 kV Relays
- K41A, K41B Series 7-59
- K41C Series 7-59
- K41P Series 7-60
- K41R Series 7-60
- K40P Series 7-61
- K40P364 Series 7-61

7.5 kV Relays
- KM-17 7-62

8.0 kV Relays
- K47A Series 7-63
- K47B Series 7-63
- HC-2 Series 7-64
- HC-6 Series 7-64
- H-18 Series 7-65
- K44P Series 7-66

10 kV Relays
- K81A and K81B Series 7-67
- K81C Series 7-68
- K43A, K43B and K43C Series 7-69
- K43P and K43R Series 7-70

12 kV Relays
- H-14 and H-16 Series 7-71

15 kV Relays
- H-8 Series 7-72
- KC-14 Series 7-73
- KC-18 Series 7-73
- KC-2 Series 7-74
- KC-11 Series 7-74
- KC-12 Series 7-74
- KC-15 and KC-16 Series 7-75
- H-26 Series 7-76

Dimensions are shown for reference purposes only. Specifications subject to change.

Dimensions are in millimeters unless otherwise specified.

USA: +1 800 522 6752
Asia Pacific: +86 0 400 820 6015
UK: +44 800 267 666

For additional support numbers please visit www.te.com

Table of Contents (Continued)

20/25 kV Relays
H-19 and H-17 Series 7-77
25 kV Relays
K62A, K62B and K62C Series 7-78
KC-20 Series 7-79
KC-30 Series 7-79
KC-22, KC-32 Series 7-80
KC-28, KC-38 Series 7-80
H-23 and H-24 Series 7-81
35 kV Relays
KP61 Series 7-82
K60C Series 7-83
K61A and K61B Series 7-84
K61C Series 7-84
50 kV Relays
K64C Series 7-85
H-25 Series 7-85
70 kV Relays
K70A and K70B Series 7-86
K70C Series 7-86
Mounting Methods 7-87
Special Connectors 7-88, 7-89
Application Notes for EV/LEC Contactors 7-90, 7-91
Application Notes for MAP/CAP Contactors . . . . . 7-92 to 7-94
Application Notes on Coil Power Economizing using PWM Circuits 7-94, 7-95

Catalog 5-1773450-5
Revised 3-13

www.te.com

Dimensions are shown for reference purposes only. Specifications subject to change.

Dimensions are in millimeters unless otherwise specified.

USA: +1 800 522 6752
Asia Pacific: +86 0 400 820 6015
UK: +44 800 267 666

For additional support numbers please visit www.te.com

KILOVAC High Voltage DC Contactors Quick Reference Guide

		(MAP) Aerospace Military			
Product Series		**MAP101**	**MAP100**	**MAP200**	**MAP201**
Main Contact Data					
Continuous Current	A	100	100	500	350
Contact Voltage Range	Vdc	12-900	12-900	12-900	12-900
Electrical Life at Rated Current, 270 Vdc, Resistive Load	Cycles	25,000	15,000	1,000	5,000
Overload (Make/Break) @ 350 Vdc	A	2,000/2,000	500/1,500	650/2,000	2,000/2,000
Rupture (Break only) @ 350 Vdc	A	2,000	1,500	2,000	2,000
Contact Arrangement		SPST	SPST	SPST	SPST
Contact Form		Latch	X (NO) or Latch	X (NO)	X (NO)
Contact Resistance @ Rated Current	milliohms	0.75	0.5	0.2	0.3
Auxiliary Contact Data					
Contact Form/Quantity of Sets (Max.)		Form A/1	Form A/1	Form A/1	Form A/1
Current Rating @ 30 Vdc (Ag/Au), Max.	A	2.0/0.1	2.0/0.1	2.0/0.1	2.0/0.1
Minimum Signal Level	Vdc/mAdc	Ag 6V/15mA Au 5V/5mA	Ag 6V/15mA Au 5V/5mA	Ag 6V/15mA Au 5V/5mA	Ag 6V/15mA Au 5V/5mA
Dielectric Withstanding Voltage					
Contacts to Coil to All Other Points	Vrms	1,500	1,500	2,200	2,200
Insulation Resistance					
Initially @ 500 Vdc	megohms	100	100	100	100
At End of Life @ 500 Vdc	megohms	50	50	50	50
Environmental Data					
Operating Temperature Range	°C	-55 to +85	-55 to +85	-55 to +85	-55 to +85
Storage Temperature Range	°C	-65 to +125	-65 to +125	-65 to +125	-65 to +125
Shock, 11ms, 1/2 Sine	G's	20	20	20	20
Vibration, Sine (55-2,000 Hz)	G's	20	20	20	20
Coil Transient Suppression		No	X, Yes/Latch, No	Yes	Yes
Mechanical Data					
Operate Time @ 25°C (Including Bounce), Max./Typ.	ms	40/20	40/20	40/20	40/20
Release Time, Max.	ms	15	15	15	15
Bounce Time, Max.	ms	5	5	5	5
Mechanical Life, Min.	Cycles	100,000	100,000	100,000	100,000
Weight (Nominal)	lb. (kg)	0.79 (.35)	0.79 (.35)	0.95 (.43)	0.95 (.43)
Coil Voltage (Nominal)	Vdc	28	28	28	28

Note: Consult TE Connectivity for complete specifications, detailed performance characteristics and additional models.

For factory-direct application assistance, dial 800-253-4560, ext. 2055, or 805-220-2055.

Dimensions are shown for reference purposes only. Specifications subject to change.

Dimensions are in millimeters unless otherwise specified.

USA: +1 800 522 6752
Asia Pacific: +86 0 400 820 6015
UK: +44 800 267 666

For additional support numbers please visit www.te.com

KILOVAC High Voltage DC Contactors Quick Reference Guide (Continued)

(CAP) Aerospace Commercial			(EV) OEM/Commercial &Electric Vehicle				(LEV) Industrial Commercial	
CAP202	**CAP200**	**CAP100**	**EV200A**	**EV200B**	**EV200P**	**EV100**	**LEV100**	**LEV200**
300	500	100	500	500	500	100	100	500
12-900	12-900	12-900	12-900	12-900	12-900	12-900	900	12-900
10,000	1,000	6,000	1,000	500	500	6,000	6,000	1,000
650/2,000	650/2,000	600/1000	650/2000	650/1000	650/1000	600/1000	600/1000	650/2000
2,000	2,000	1000	2000	1000	1000	1000	1000	1000
DPST	SPST	SPST	SPST	SPST	SPST	SPST	SPST	SPST
2X (NO)	X (NO)	X (NO)	X(NO)	Y(NC)	X (LATCH)	X(NO)	X(NO)	X(NO)
0.2	0.2	0.2	0.2	0.2	0.2	0.2	0.2	0.2
Form C/4	Form A/2	Form C/1	Form A/1	Form A/1	Form A/1	None	Form X/1	Form X/1
2.0/0.1	2.0/0.1	2.0/0.1	2.0/0.1	2.0/0.1	2.0/0.1	2.0/0.1	2.0/0.1	2.0/0.1
Ag 6V/15mA Au 5V/5mA	Ag 6V/15mA Au 5V/5mA	Ag 6V/15mA Au 5V/5mA	Ag 6V/15mA Au 5V/5mA	Ag 6V/15mA Au 5V/5mA	Ag 6V/15mA Au 5V/5mA	—	—	Ag 6V/15mA Au 5V/5mA
2,200	2,200	2,200	2,200	2,200	2,200	2,200	2,000	2,200
100	100	100	100	100	100	100	100	100
50	50	50	50	50	50	50	50	50
-55 to +85	-55 to +85	-55 to +85	-40 to +85	-40 to +60	-40 to +85	-40 to +85	-40 to +85	-40 to +85
-65 to +125	-65 to +125	-65 to +125	-65 to +125	-65 to +125	-65 to +125	-65 to +125	-65 to +125	-65 to +125
30	20	20	20	30 (Closed)/ 10 (Open)	30	20	20	20
20	20	20	20	10	20	20	20	20
Yes	Yes	Yes	Yes	Yes	No	Yes	No	No
40/20	40/20	25/15	25/15	25/15	25/15	25/15	25/15	25
15	15	10	12	15	15	15	10	15
5	5	5	7	5	5	5	5	5
100,000	100,000	100,000	1,000,000	100,000	100,000	1,000,000	1,000,000	100,000
1.3 (.59)	0.95 (.43)	6.70 (190)	0.95 (.43)	0.95 (.43)	.99 (.53)	.28 (.130)	0.42 (.19)	1.3 (.60)
28	28	28	9-36	12/24	12/24	9-36	12/24/48	12/24/48

For factory-direct application assistance, dial 800-253-4560, ext. 2055, or 805-220-2055.

Catalog 5-1773450-5
Revised 3-13

www.te.com

Dimensions are shown for reference purposes only. Specifications subject to change.

Dimensions are in millimeters unless otherwise specified.

USA: +1 800 522 6752
Asia Pacific: +86 0 400 820 6015
UK: +44 800 267 666

For additional support numbers please visit www.te.com

KILOVAC MAP101 Series Contactor with 1 Form A (SPST-NO) Contacts Rated up to 100 Amps, 12-900 Vdc Dual Contact Material (Cu/Mo)

Product Facts

- **Dual contact material (copper/moly) designed for high current make and interrupt military aerospace, ground vehicle and naval applications**
- **Hermetically sealed, intrinsically safe, operates in explosive/harsh environments with no oxidation or contamination of coils or contacts, during long periods of non-operation**
- **Comes standard with 1 SPST-NO Aux. contact**
- **Not position sensitive, can be mounted in any orientation**
- **RoHS versions available**

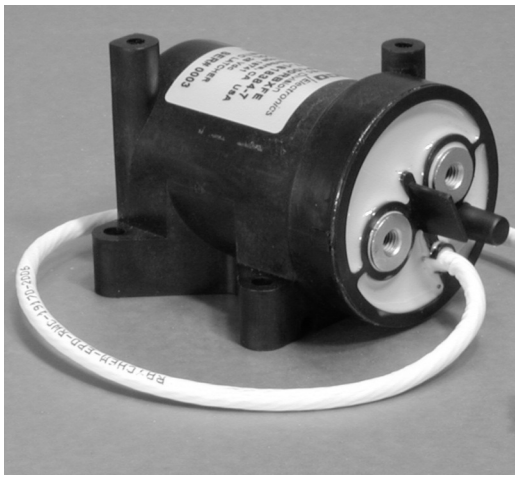

Coil Data

Coil Voltage, Nominal/ Max — 28/ 32 Vdc

Coil Resistance @ 25°C —
Contacts Close Coil — 18 Ω
Contacts Open Coil — 13 Ω

Pick Up/ Drop Out (Max) —
16 Vdc (-55°C to +25°C)
18 Vdc (+25°C to +85°C)

Coil Current (Max) @ 32Vdc/ -40°C — 4.0 A

Coil Current On Time (Minimum Required to Latch) — 40 ms

Main Contacts —
Operate Time (Max) — 40 ms
Operate Bounce (Max) — 5 ms
Release Time — 25 ms

Auxiliary Contacts Operate/ Release — Within ± 5 ms of main

Physical Data

Contact Arrangement —
Main Contacts —
SPST-Latching (form X)
1X Auxiliary Contact —
SPST-NO (form A)

Dimensions — See drawing

Weight, Nominal —
0.35 Kg (12.35 oz)

Environmental Data

Shock, 11ms 1/2 Sine (Operating) — 20 G_{peak}

Sine Vibration, 20 G_{peak} —
55-2000 Hz

Random Vibration, 14.06 Grms —
15 Hz (.002 G^2/Hz), 100 Hz (.002 G^2/Hz), 450 Hz (.12 G^2/Hz), 900 Hz (.12 G^2/Hz), 2000 Hz (.083 G^2/Hz)

Operating Temperature Range —
-55°C to +85°C

Electrical Data

Voltage Rating —
Main Contacts (max) — 400 Vdc
Auxiliary Contacts — 30 Vdc

Current Rating, Continuous —
Main Contacts [1] — 100 A
Auxiliary Contacts — 3 A

Contact Resistance —
Main Contacts —
100 mΩ max @ 1 amp
0.75 mΩ max @ rated current
Auxiliary Contacts —
200 mΩ max

Electric Life at Rated Current 270 Vdc, Resistive Load —
25,000 cycles

Mechanical Life — 1 million cycles

Dielectric Withstand Voltage —
Terminal to Terminal/ Terminals to Coil —
1mA max @ 1,300Vrms

Insulation Resistance —
Terminal to Terminal/ Terminals to Coil —
100MΩ min @ 500Vdc new
50MΩ min @ 500Vdc end of life

Note:
[1] Continuous current rating is affected by conductors attached. Keep terminals below 150°C max continuous.

Ordering Information

Typical Part Number ▶ **MAP101 R B A F E**

Series:
MAP101 = 100 Amp, 12-900VDC Contactor Dual Contact Material

Contact Form:
R - Latch with 1 SPST NO Aux.

Coil Voltage:
B = 28 Vdc Coil

Lead Length:
A = 15.3 in. (300 mm)

Coil Terminal Connector:
N = None
F = Plug on Flying Lead, 9 Pin Micro-D

Mounting & Power Terminals
E = side mount with 2x#8 10-32 Female Power Terminals

For factory-direct application assistance, dial 800-253-4560, ext. 2055, or 805-220-2055.

Catalog 5-1773450-5
Revised 3-13

www.te.com

Dimensions are shown for reference purposes only. Specifications subject to change.

Dimensions are in millimeters unless otherwise specified.

USA: +1 800 522 6752
Asia Pacific: +86 0 400 820 6015
UK: +44 800 267 666

For additional support numbers please visit www.te.com

KILOVAC MAP101 Series Contactor (Continued)

Outline Dimensions

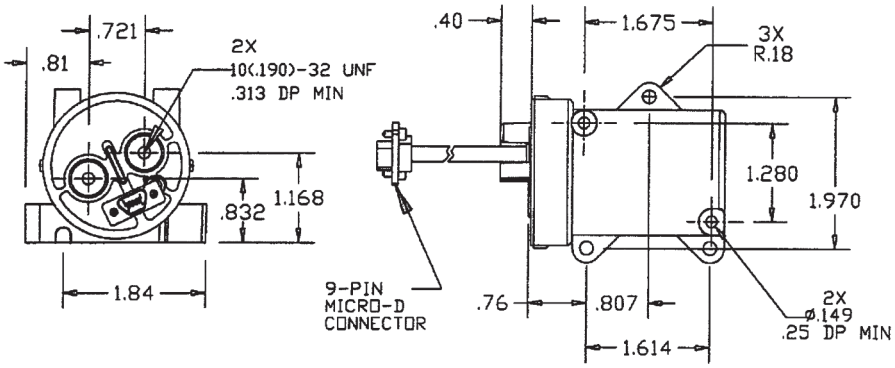

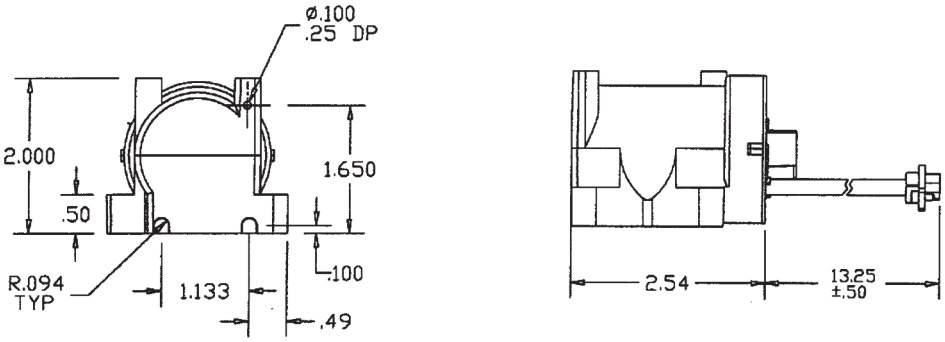

Connector Pin-Out

1	Not Connected
2	Aux. NO
3	Close Return
4	Close Return
5	+28Vdc
6	Aux. Com.
7	Open Return
8	Open Return
9	+28V

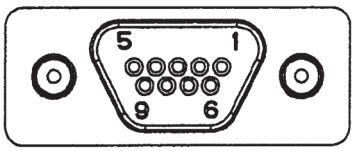

For factory-direct application assistance, dial 800-253-4560, ext. 2055, or 805-220-2055.

Catalog 5-1773450-5
Revised 3-13

www.te.com

Dimensions are shown for reference purposes only. Specifications subject to change.

Dimensions are in millimeters unless otherwise specified.

USA: +1 800 522 6752
Asia Pacific: +86 0 400 820 6015
UK: +44 800 267 666

For additional support numbers please visit www.te.com

KILOVAC MAP100 Series Contactor with 1 Form A (SPST-NO) Contacts Rated up to 100 Amps, 12-900 Vdc

Product Facts

- **Solid copper contacts designed for high current carry military aerospace, ground vehicle and naval applications**
- **Hermetically sealed, intrinsically safe, operates in explosive/harsh environments with no contact oxidation or contamination of coil or contacts, during long periods of non- operation**
- **Comes standard with 1 SPST-NO Aux. contact**
- **Not position sensitive, can be mounted in any orientation**
- **RoHS versions available**

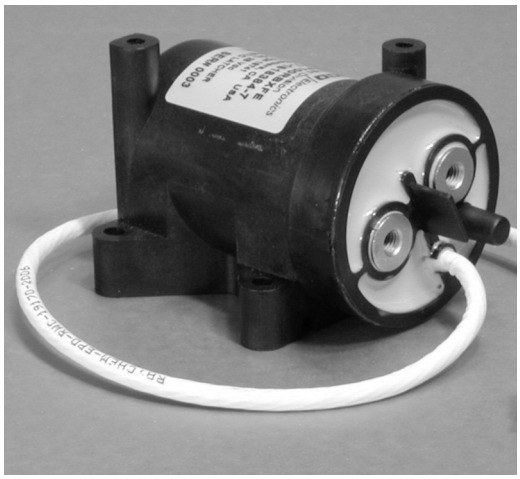

Coil Data

Coil Voltage, Nominal/ Max — 28/ 32 Vdc

Coil Resistance @ 25°C —
Contacts Close Coil — 18 Ω
Contacts Open Coil — 13 Ω

Pick Up/ Drop Out (Max) —
16 Vdc (-55°C to +25°C)
18 Vdc (+25°C to +85°C)

Coil Current (Max) @ 32Vdc/ -40°C — 4.0 A

Coil Current On Time (Minimum Required to Latch) — 40 ms

Main Contacts —
Operate Time (Max) — 40 ms
Operate Bounce (Max) — 5 ms
Release Time — 25 ms

Auxiliary Contacts Operate/ Release — Within ± 5 ms of main

Physical Data

Contact Arrangement —
Main Contacts —
SPST-Latching (or NO Form X)
1X Auxiliary Contact —
SPST-NO (form A)

Dimensions — See drawing

Weight, Nominal —
0.35 Kg (12.35 oz)

Environmental Data

Shock, 11ms 1/2 Sine (Operating) — 20 G_{peak}

Sine Vibration, 20 G_{peak} —
55-2000 Hz

Random Vibration, 14.06 Grms —
15 Hz (.002 G^2/Hz), 100 Hz (.002 G^2/Hz), 450 Hz (.12 G^2/Hz), 900 Hz (.12 G^2/Hz), 2000 Hz (.083 G^2/Hz)

Operating Temperature Range —
-55°C to +85°C

Electrical Data

Voltage Rating —
Main Contacts (max) — 400 Vdc
Auxiliary Contacts — 30 Vdc

Current Rating, Continuous —
Main Contacts [1] — 100 A
Auxiliary Contacts — 3 A

Contact Resistance —
Main Contacts —
100 mΩ max @ 1 amp
0.75 mΩ max @ rated current
Auxiliary Contacts —
200 mΩ max

Electrical Life at Rated Current, 270 Vdc, Resistive Load —
15,000 cycles

Mechanical Life — 1 million cycles

Dielectric Withstand Voltage —
Terminal to Terminal/ Terminals to Coil —
1mA max @ 1,300Vrms

Insulation Resistance —
Terminal to Terminal/ Terminals to Coil —
100MΩ min @ 500Vdc new
50MΩ min @ 500Vdc end of life

Note:
[1] Continuous current rating is affected by conductors attached. Keep terminals below 150°C max continuous.

Ordering Information

Typical Part Number ▶ **MAP100 R B A F E**

Series:
MAP100 = 100 Amp, 12-900VDC Contactor

Contact Form:
H = NO with 1 SPST NO Aux.
R - Latch with 1 SPST NO Aux.

Coil Voltage:
B = 28 Vdc Coil

Lead Length:
A = 15.3 in. (300 mm)

Coil Terminal Connector:
N = None
F = Plug on Flying Lead, 9 Pin Micro-D

Mounting & Power Terminals
E = side mount with 2x#8
10-32 Female Power Terminals

For factory-direct application assistance, dial 800-253-4560, ext. 2055, or 805-220-2055.

Catalog 5-1773450-5
Revised 3-13

www.te.com

Dimensions are shown for reference purposes only. Specifications subject to change.

Dimensions are in millimeters unless otherwise specified.

USA: +1 800 522 6752
Asia Pacific: +86 0 400 820 6015
UK: +44 800 267 666

For additional support numbers please visit www.te.com

KILOVAC MAP100 Series Contactor (Continued)

Outline Dimensions

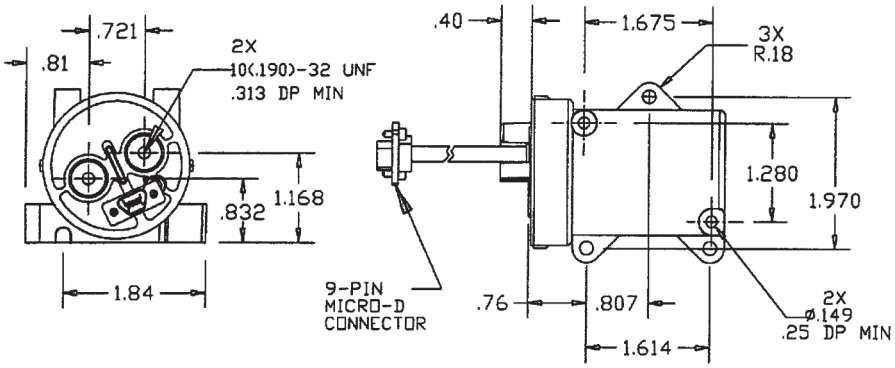

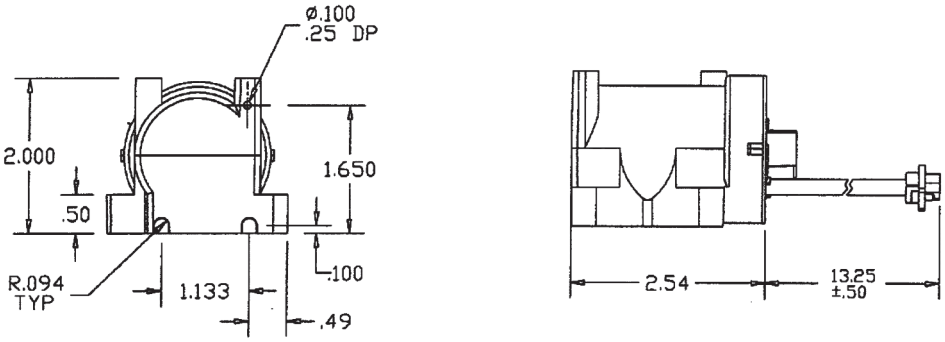

Connector Pin-Out

1	Not Connected
2	Aux. NO
3	Close Return
4	Close Return
5	+28Vdc
6	Aux. Com.
7	Open Return
8	Open Return
9	+28V

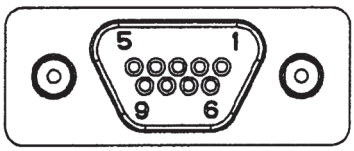

For factory-direct application assistance, dial 800-253-4560, ext. 2055, or 805-220-2055.

Catalog 5-1773450-5
Revised 3-13

www.te.com

Dimensions are shown for reference purposes only. Specifications subject to change.

Dimensions are in millimeters unless otherwise specified.

USA: +1 800 522 6752
Asia Pacific: +86 0 400 820 6015
UK: +44 800 267 666

For additional support numbers please visit www.te.com

KILOVAC MAP200 Series Contactor with 1 Form A (SPST-NO) Contacts Rated up to 500 Amps, 12-900 Vdc

Product Facts

- **Designed to be the smallest, lightest weight, lowest cost sealed contactor in the industry with its current rating for military aerospace, ground vehicle and naval, high current applications**
- **Built-in coil economizer (models requiring external economizer also available)**
- **Optional auxiliary contact for easy monitoring of power contact position**
- **Hermetically sealed — intrinsically safe, operates in explosive/harsh environments with no oxidation or contamination of coil or contacts, including long periods of non-operation**
- **Versatile coil and power connections**
- **RoHS versions available**

Performance Data

Contact Arrangement, Power Contacts — 1 Form A (SPST-NO)

Rated Operating Voltage — 12 - 900 VDC

Continuous (Carry) Current, Typical — 500 A @ 85°C, 400 mcm conductors
Consult Factory for required conductors for higher currents

Make/Break Current at Various Voltages [1] — See graph next page

Break Current at 320VDC [1] — 2,000 A, 1 cycle

Contact Resistance, Typ. (@200A) — 0.2 mohms

Load Life — See graph next page

Mechanical Life — 1 million cycles

Contact Arrangement, Auxiliary Contacts — 1 Form A (SPST-NO)

Aux. Contact Current, Max. — 2A @ 30VDC / 3A @ 125VAC

Aux. Contact Current, Min. — 100mA @ 8V

Aux. Contact Resistance, Max. — 0.417 ohms @ 30VDC / .150 ohms @ 125VAC

Dielectric Withstanding Voltage — 2,200 Vrms @ sea level

Insulation Resistance @ 500VDC — 100 megohms [2]

Shock, 11ms 1/2 Sine, Peak, Operating — 20 G

Vibration, Sine, 50-2000Hz., Peak — 20 G

Operating Temperature — -55°C to +85°C

Weight, Nominal — .95 lb. (.43 kg)

Notes:
[1] Main power contacts
[2] 50 at end of life

Coil Operating Voltage (Valid Over Temperature Range)	
Voltage (Will Operate)	18-32VDC
Voltage (Max.)	32VDC
Pickup (Close) Voltage Max.	18VDC
Hold Voltage (Min.)	10VDC
Dropout (Open) Voltage (Min.)	2VDC
Inrush Current (Max.)	4.5A
Holding Current (Avg.)	0.5A
Inrush Time (Max.)	100ms

Ordering Information

Typical Part Number ▶ **MAP200 A R D E A**

Series:
MAP200 = 500 Amp, 12-900VDC Contactor

Contact Form:
A = Normally Open
H = Normally Open with Aux. Contacts

Coil Voltage:
R = 28 Vdc, Mechanical Economizer
S = 28 Vdc, Electrical Cut-throat Economizer

Coil Wire Length:
A = 15.3 in (390 mm)
D = Coil connector on relay (requires option "E" or "X" in next step).

Coil Terminal Connector:
N = No connector
E = 9-pin subminiature "D" plug mounted on contactor housing
X = Special configuration (consult factory)

Mounting & Power Terminals:
A = Bottom Mount & Male M8 x 1.25 Thread Terminals
B = Bottom Mount & Female 1/4-20 Thread Terminals
D = Bottom Mount & Female M6 x 1 Thread Terminals

For factory-direct application assistance, dial 800-253-4560, ext. 2055, or 805-220-2055.

Catalog 5-1773450-5
Revised 3-13

www.te.com

Dimensions are shown for reference purposes only. Specifications subject to change.

Dimensions are in millimeters unless otherwise specified.

USA: +1 800 522 6752
Asia Pacific: +86 0 400 820 6015
UK: +44 800 267 666

For additional support numbers please visit www.te.com

KILOVAC MAP200 Series (Continued)

Outline Dimensions

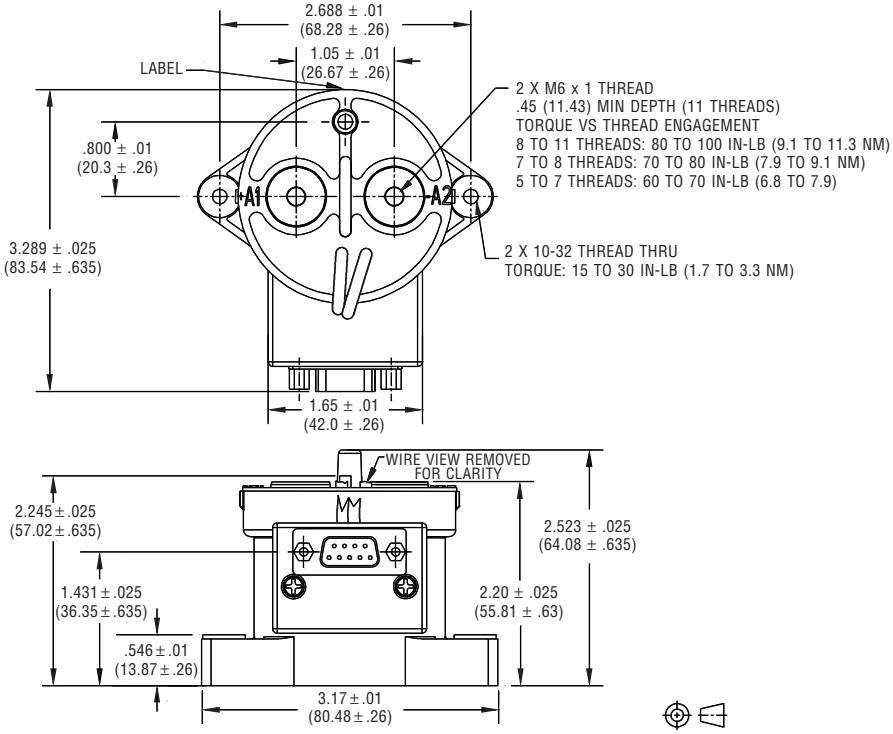

MAP200HR D-Sub Pin Out
Coil+ = Pin 2
Coil - = Pin 6
Aux. COM = Pin 8
Aux. NO = Pin 4

MAP200AR
Coil+ = Pin 2
Coil - = Pin 6

Estimated Make & Break Power Switching Ratings

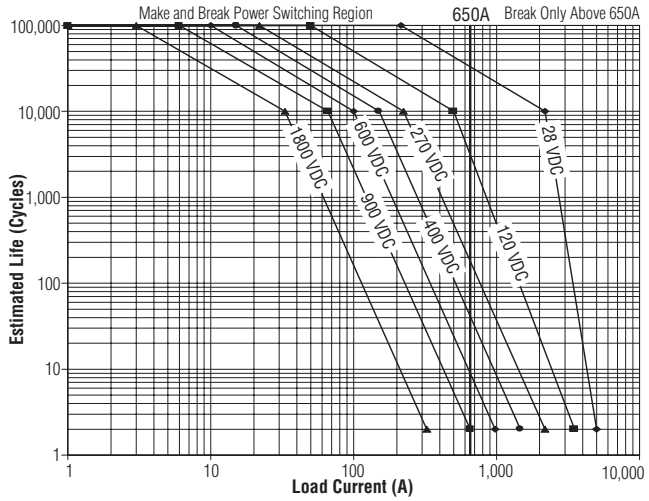

NOTES:
1) For resistive loads with 300µH maximum inductance. Consult factory for inductive loads.
2) Estimates based on extrapolated data. User is encouraged to confirm performance in application.
3) End of life when dielectric strength between terminals falls below 50 megohms @ 500VDC.
4) The maximum make current is 650A to avoid contact welding.

For factory-direct application assistance, dial 800-253-4560, ext. 2055, or 805-220-2055.

Catalog 5-1773450-5
Revised 3-13

www.te.com

Dimensions are shown for reference purposes only. Specifications subject to change.

Dimensions are in millimeters unless otherwise specified.

USA: +1 800 522 6752
Asia Pacific: +86 0 400 820 6015
UK: +44 800 267 666

For additional support numbers please visit www.te.com

KILOVAC MAP201 Series Contactor with 2 Form A (SPST-NO) Contacts Rated up to 350 Amps, 12-900 Vdc Dual Contact Material (Cu/Mo)

Product Facts

- **Designed to be the smallest, lightest weight, lowest cost sealed contactor in the industry with its current rating for military aerospace**
- **Built-in coil economizer (models requiring external economizer also available)**
- **Optional auxiliary contact for easy monitoring of power contact position**
- **Hermetically sealed — intrinsically safe, operates in explosive/harsh environments with no oxidation or contamination of coil or contacts, including long periods of non-operation**
- **Versatile coil and power connections**
- **RoHS versions available**

Physical Data

Contact Arrangement —
Power Contacts —
SPST-NO (form X)
2X Auxiliary Contacts [1] —
SPST-NO (form A)

Dimensions — See drawing

Weight, Nominal — 0.45 Kg (0.99 lb)

Environmental Data

Shock, 11ms 1/2 Sine (Operating) — 20 G_{peak}

Sine Vibration, 20 G_{peak} — 55-2000 Hz

Random Vibration, 14.06 Grms — 15 Hz (.002 G^2/Hz), 100 Hz (.002 G^2/Hz), 450 Hz (.12 G^2/Hz), 900 Hz (.12 G^2/Hz), 2000 Hz (.083 G^2/Hz)

Operating Temperature Range — -55°C to +85°C

Electrical Data

Voltage Rating —
Main Contacts (max) — 400 Vdc
Auxiliary Contacts — 30 Vdc

Current Rating, Continuous —
Main Contacts [2] — 300 A
Auxiliary Contacts — 3 A

Contact Resistance —
Main Contacts [3] —
100 mΩ max @ 1 amp
0.3 mΩ max @ rated current
Auxiliary Contacts —
200 mΩ max

Hot Switching Performance (Polarity Sensitive) —
600A make/ 265A break @ ± 270Vdc — 11,000 cycles
550A make/ break @ ± 360Vdc — 100 cycles
2000A capacitive make — 100 cycles
2000A make/ break @ +360Vdc — 5 cycles
1000A make/ break @ -360Vdc — 2 cycles

Mechanical Life — 1 million cycles

Dielectric Withstand Voltage —
Terminal to Terminal/ Terminals to Coil — 1mA max @ 2,200Vrms

Insulation Resistance —
Terminal to Terminal/ Terminals to Coil — 100MΩ min @ 500Vdc

Notes:
[1] Two form A available with electronic coil economizer, 1 form A available with mechanical coil economizer
[2] Continuous current rating is affected by conductors attached. Keep terminals below 150°C max continuous, 175C for 1 hour max, and 200C for 1 minute max.
[3] Initial contact resistance may be higher than 0.3mΩ, but will drop below within 30 minutes maximum

Coil Data

Coil Voltage, Nominal/ Max — 28/ 32 Vdc

Pick Up (Max) — 16 Vdc

Inrush Current @ 28Vdc (Max) — 3.5 A

Inrush Time (Max) — 100 ms

Hold Current (Max) — 0.32 A

Drop Out — 4 to 10 Vdc

Main Contacts —
Operate Time (Max) — 18 ms
Operate Bounce (Max) — 5 ms
Release Time — 18 ms

Auxiliary Contacts Operate/ Release — Within ± 5 ms of main

Ordering Information

Typical Part Number ▶ **MAP201 A R D E A**

Series:
MAP201 = 350 Amp, 12-900VDC Contactor

Contact Form:
A = Normally Open
H = Normally Open with Aux. Contacts

Coil Voltage:
R = 28 Vdc, Mechanical Economizer
S = 28 Vdc, Electrical Cut-throat Economizer

Coil Wire Length:
A = 15.3 in (390 mm)
D = Coil connector on relay (requires option "E" or "X" in next step).

Coil Terminal Connector:
N = No connector
E = 9-pin subminiature "D" plug mounted on contactor housing
X = Special configuration (consult factory)

Mounting & Power Terminals:
A = Bottom Mount & Male M8 x 1.25 Thread Terminals
B = Bottom Mount & Female 1/4-20 Thread Terminals
D = Bottom Mount & Female M6 x 1 Thread Terminals

For factory-direct application assistance, dial 800-253-4560, ext. 2055, or 805-220-2055.

Catalog 5-1773450-5
Revised 3-13

www.te.com

Dimensions are shown for reference purposes only. Specifications subject to change.

Dimensions are in millimeters unless otherwise specified.

USA: +1 800 522 6752
Asia Pacific: +86 0 400 820 6015
UK: +44 800 267 666

For additional support numbers please visit www.te.com

KILOVAC MAP201 Series Contactor (Continued)

Outline Dimensions*

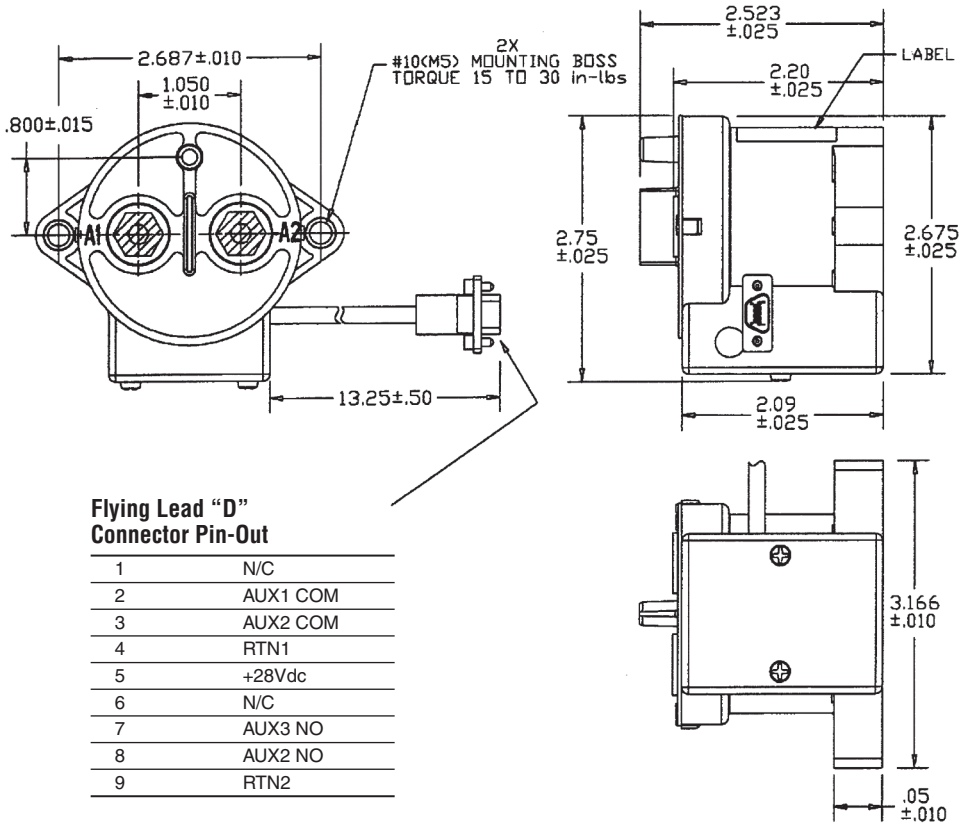

Flying Lead "D"
Connector Pin-Out

1	N/C
2	AUX1 COM
3	AUX2 COM
4	RTN1
5	+28Vdc
6	N/C
7	AUX3 NO
8	AUX2 NO
9	RTN2

MAP200HR D-Sub
Pin Out
Coil+ = Pin 2
Coil - = Pin 6
Aux. COM = Pin 8
Aux. NO = Pin 4

MAP200AR
Coil+ = Pin 2
Coil - = Pin 6

***Alternate coil and main terminal connections available, consult factory.**

For factory-direct application assistance, dial 800-253-4560, ext. 2055, or 805-220-2055.

Catalog 5-1773450-5
Revised 3-13

www.te.com

Dimensions are shown for reference purposes only. Specifications subject to change.

Dimensions are in millimeters unless otherwise specified.

USA: +1 800 522 6752
Asia Pacific: +86 0 400 820 6015
UK: +44 800 267 666

For additional support numbers please visit www.te.com

KILOVAC CAP202 Series Aerospace Commercial Contactor with 2 Form X (DPST-NO), Contacts Rated up to 300 Amps, 12-600 Vdc

Product Facts

- **Hermetically sealed**
- **Up to 4X SPDT auxiliary switch outputs: 30 Vdc/2A max switching or 6V/5mA min. signal**
- **Integrated coil economizer with coil suppression**
- **EMC compliant - no radiated coil emission**
- **Bidirectional switching - main contacts not polarity sensitive**
- **Mount in any orientation - not position sensitive**

Description

2-pole single throw hermetically sealed DC contactor; 12-900 Vdc/350A per pole

Not position sensitive

Bi-directional switching

Applications

High Voltage DC Converter Systems (ref schematic below)

Test Equipment

Power Distribution

Power Motion Control

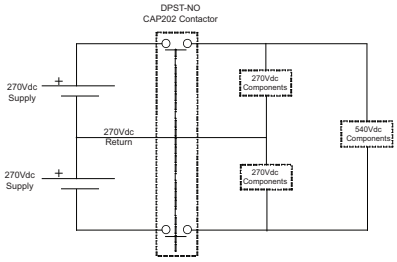

Electrical

Compact epoxy-sealed resin enclosure occupies only about 4 in³ (65.5 cm³)

Contact arrangement: DPST-No (2 form X)

Voltage rating: 12-900 Vdc (main contacts); 30 Vdc (auxiliary)

Mechanical life: 100,000 cycles

Physical or Other Properties

Weight: 0.79 Kg

Hermetically sealed

Safe for harsh/corrosive environments

No contacts oxidation over periods on non-use

Number of SPDT Auxiliary Contacts per Contactor Type:
CAP202AS — None
CAP202MS — Two
CAP202FS — Four

Performance Data

Physical Data

Contact Arrangement —
Power Contacts — DPST-NO (2 Form X)
Auxiliary Switches — SPDT (form C)

Dimensions — See drawings on next page

Weight — 0.79 Kg (1.74 lb.)

Electrical Data

Voltage Rating —
Main Contacts — 12-900Vdc
Auxiliary Catacts — 30VdC

Current Rating —
Main Contacts[1] — 350A/pole
Auxiliary Catacts — 3A

Contact Resistance —
Main Contacts — (2)
100 mΩ max @ 1 amp
0.3 mΩ max. @ 200A after 3 mins.
Auxiliary Catacts — 200 mΩ max

Hot Switching Performance @ ± 400 Vdc (3) —
100A make/break — 10,000 cycles
250A make/break — 2,500 cycles
700A break only — 10 cycles

Hot Switching Performance @ ± 270 Vdc (4) —
100A make/break — 40,000 cycles
250A make/break — 7,500 cycles
2000A break only @ ±370Vdc (5) — 2 cycles

Maximum Make Current — 700A

Dielectric Withstand Voltage over Life — Terminal to Terminal/Terminals to Coil — 1mA max @ 2,200Vrms

Insulation Resistance over Life — Terminal to Terminal/Terminals to Coil — 50mΩ min @ 500Vdc

Mechanical Life — 100,000 cycles

Environmental Data

Shock, 11ms 1/2 sine (operating) — 20G peak

Sine Vibration, 10G peak — 55-2,000 Hz.

Random Vibration, 14 Grms —

15	100	300	900	2000 Hz
.01	.01	.2	.2	.01 G2/Hz

Operating Temperature Range — -55°C to +85°C

Notes:

[1] Using 4/0 conductor. Current rating is affected by attached conductor size and design. Keep terminals below 150˚C max. continuous, 175˚C for 2 hours max. and 200˚C for 1 minute max. For mounting large conductors, request terminal adapter PN 3-1618396-7.

[2] Operational contact resistance is measured by millivolt drop across contacts a > 100A current. Initial contact resistance may be higher than 0.3mΩ, but will drop below within 30 mins. max.

[3] Voltage applied to each contact set separately.

[4] Voltage applied across both contact sets in series.

[5] May not pass 2,200 Vrms dielectric testing after second interrupt cycle.

For factory-direct application assistance, dial 800-253-4560, ext. 2055, or 805-220-2055.

Catalog 5-1773450-5
Revised 3-13

www.te.com

Dimensions are shown for reference purposes only. Specifications subject to change.

Dimensions are in millimeters unless otherwise specified.

USA: +1 800 522 6752
Asia Pacific: +86 0 400 820 6015
UK: +44 800 267 666

For additional support numbers please visit www.te.com

KILOVAC CAP202 Series 12-900Vdc Contactors

Outline Dimensions*

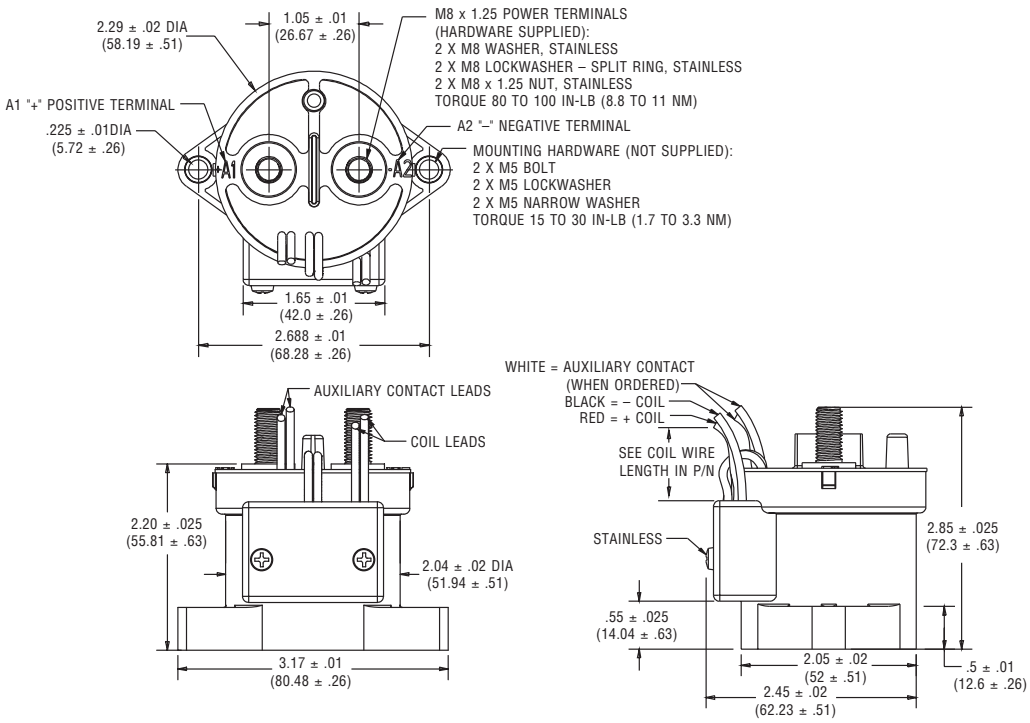

Coil Data (-40 to +85˚C temp range unless otherwise noted)	
Voltage/Nominal Max.	28-32VDC
Pickup Voltage Max.	16VDC
Inrush Current @ 28 Vdc nominal/@32V maximum	3.4/6.0A
Inrush Time (nominal/maximum)	75/150mS
Hold Current @28V nominal / @32V maximum	0.27/0.48A
Drop Out Voltage	3 to 8Vdc
Internal Coil Suppression (max.)	60Vdc
Main Contacts: Operate Time, nominal/maximum	13/20mS
Main Contacts: Operate Bounce, nominal/maximum	3/10mS
Main Contacts: Release Time, nominal/maximum	25mS
Main Contacts: Release Time, maximum including Maximum arc time	7/12mS

Ordering Information

Typical Part Number ▶ **CAP202 M S B F D**

Series:
CAP202 = 2 form X, DPST-N0-DM Contactor

Auxiliary Contact Outputs (SPDT form C):
A = None
M = Two
F = Four

Coil Voltage:
S = 28V (with built-in electronically switched dual coil economizer)

Coil and Aux. Wire Length:
A = 15.3 inches
B = 6 inches
X = Customer Special

Coil and Aux. Connector:
N = None
F = D Plug on flying leads (may affect wire length)

Mounting & Power Terminals:
D = 2X M5 Bottom Mount with 4X, M6 x 1 Female thread terminals

Specifications are subject to change without notice.

For factory-direct application assistance, dial 800-253-4560, ext. 2055, or 805-220-2055.

Catalog 5-1773450-5
Revised 3-13

www.te.com

Dimensions are shown for reference purposes only. Specifications subject to change.

Dimensions are in millimeters unless otherwise specified.

USA: +1 800 522 6752
Asia Pacific: +86 0 400 820 6015
UK: +44 800 267 666

For additional support numbers please visit www.te.com

KILOVAC CAP200 Series Contactor with 1 Form A (SPST-NO) Contacts Rated up to 500 Amps, 12-900 Vdc

Product Facts

- **Designed to be the smallest, lightest weight, lowest cost sealed contactor in the industry with its current rating**
- **Built-in coil economizer — only 1.7W hold power @ 12VDC and it limits back EMF to 0V. (models requiring external economizer also available)**
- **Optional auxiliary contact for easy monitoring of power contact position**
- **Hermetically sealed — intrinsically safe, operates in explosive/harsh environments with no oxidation or contamination of coil or contacts, including long periods of non-operation**
- **Versatile coil and power connections**
- **RoHS versions available**

Coil Operating Voltage (Valid Over Temperature Range)			
Voltage (Will Operate)	9-36VDC	32-95VDC	48-95VDC
Voltage (Max.)	36VDC	95VDC	95VDC
Pickup (Close) Voltage Max.	9VDC	32VDC	48VDC
Hold Voltage (Min.)	7.5VDC	22VDC	34VDC
Dropout (Open) Voltage (Min.)	6VDC	18VDC	27VDC
Inrush Current (Max.)	3.8A	1.3A	0.7A
Holding Current (Avg.)	0.13A@12V, 0.07A@24V	0.03A@48V	0.02A@72V
Inrush Time (Max.)	130ms	130ms	130ms

Ordering Information

Typical Part Number ▶ **CAP200 A A A N A**

Series:
CAP200 = 500 Amp, 12-900VDC Contactor

Contact Form:
A = Normally Open
H = Normally Open with Aux. Contacts

Coil Voltage:
A = 9-36VDC (1 = requires external coil economizer)
D = 32-95VDC (2 = requires external coil economizer)
J = 48-95VDC (3 = requires external coil economizer)
R = 28 Vdc with mechanical economizer

Coil Wire Length:
A = 15.3 in (390 mm)
D = Coil connector on relay (requires option "E" or "X" in next step)

Coil Terminal Connector:
N = None
E = 9-pin subminiature "D" plug mounted on contactor housing
F = 9-pin subminiature "D" plug mounted on 15.3 in (390 mm) flying leads.
X = Special configuration (consult factory)

Mounting & Power Terminals:
A = Bottom Mount & Male 10mm x 8 Terminals

Performance Data

Contact Arrangement, Power Contacts — 1 Form A (SPST-NO)

Rated Operating Voltage — 12 - 900 VDC

Continuous (Carry) Current, Typical — 500 A @ 85°C, 400 mcm conductors
Consult Factory for required conductors for higher currents

Make/Break Current at Various Voltages [1] — See graph next page

Break Current at 320VDC [1] — 2,000 A, 1 cycle [3]

Contact Resistance, Typ. (@200A) — 0.2 mohms

Load Life — See graph next page

Mechanical Life — 1 million cycles

Contact Arrangement, Auxiliary Contacts — 1 Form A (SPST-NO)

Aux. Contact Current, Max. — 2A @ 30VDC / 3A @ 125VAC

Aux. Contact Current, Min. — 100mA @ 8V

Aux. Contact Resistance, Max. — 0.417 ohms @ 30VDC / .150 ohms @ 125VAC

Dielectric Withstanding Voltage — 2,200 Vrms @ sea level

Insulation Resistance @ 500VDC — 100 megohms [2]

Shock, 11ms 1/2 Sine, Peak, Operating — 20 G

Vibration, Sine, 80-2000Hz., Peak — 20 G

Operating Temperature — -40°C to +85°C

Weight, Nominal — .95 lb. (.43 kg)

Notes:
[1] Main power contacts
[2] 50 at end of life
[3] Does not meet dielectric & IR after test, 1700 amp for unit with Aux. Contacts

For factory-direct application assistance, dial 800-253-4560, ext. 2055, or 805-220-2055.

Catalog 5-1773450-5
Revised 3-13

www.te.com

Dimensions are shown for reference purposes only. Specifications subject to change.

Dimensions are in millimeters unless otherwise specified.

USA: +1 800 522 6752
Asia Pacific: +86 0 400 820 6015
UK: +44 800 267 666

For additional support numbers please visit www.te.com

KILOVAC CAP200 Series (Continued)

Outline Dimensions

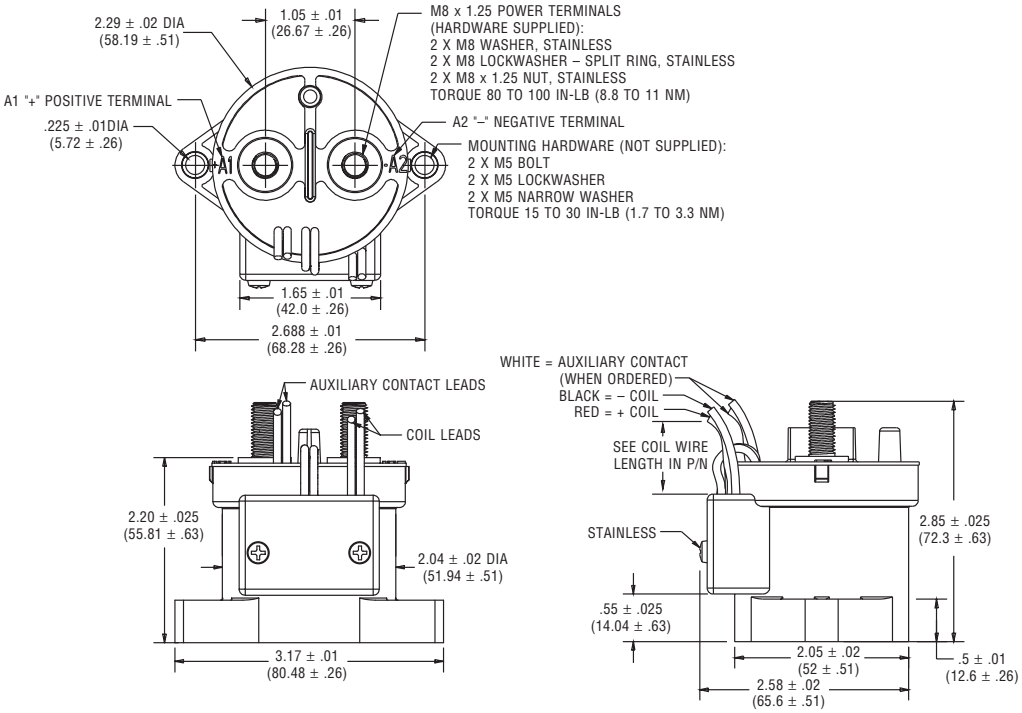

Estimated Make & Break Power Switching Ratings

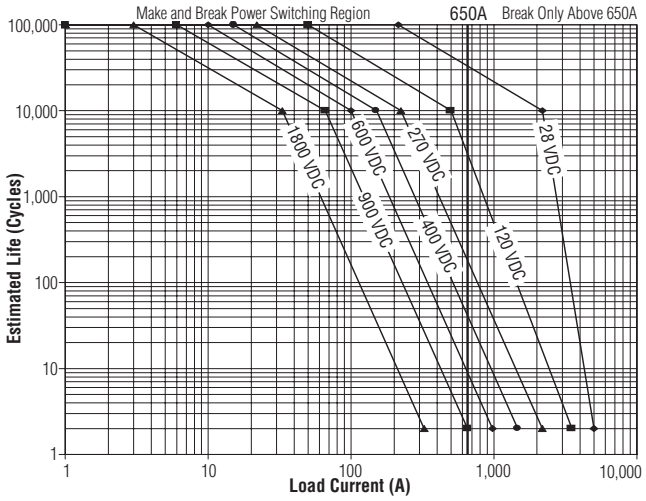

NOTES:
1) For resistive loads with 300µH maximum inductance. Consult factory for inductive loads.
2) Estimates based on extrapolated data. User is encouraged to confirm performance in application.
3) End of life when dielectric strength between terminals falls below 50 megohms @ 500VDC.
4) The maximum make current is 650A to avoid contact welding.

For factory-direct application assistance,
dial 800-253-4560, ext. 2055, or
805-220-2055.

Catalog 5-1773450-5
Revised 3-13

www.te.com

Dimensions are shown for reference purposes only. Specifications subject to change.

Dimensions are in millimeters unless otherwise specified.

USA: +1 800 522 6752
Asia Pacific: +86 0 400 820 6015
UK: +44 800 267 666

For additional support numbers please visit www.te.com

KILOVAC CAP100 Series 900 Vdc Contactor

Product Facts

- **Commercial aerospace product**
- **Hermetically sealed — intrinsically safe. Operates in explosive/harsh environments without oxidation or contamination of contacts, during long periods of non-operation**
- **8kV isolation between open contacts permits use for high voltage isolation and carry, optional auxiliary contacts**
- **12, 24 and 48 Vdc coils**
- **Solid copper contacts**
- **Designed and built in accordance to AIAG QS9000**
- **RoHS versions available**

Description

Lowest cost, 900 Vdc 100 amp, hermetically sealed DC contactor in the industry with coil suppression and 1 Form C Aux. contact

Compact package available in side- or bottom-mount reinforced configurations, not position sensitive

Applications

Power/motor control circuit isolation, circuit protection and power distribution

Commercial Aerospace

Mechanical

Compact epoxy-sealed resin enclosure occupies only about 4 in^3 (65.5 cm^3)

Robust integral mounting plate on either bottom or side of enclosure accepts two M4 screws

Inert gas filled contact chamber

Flying leads for coil connections

Load terminals threaded for M5 bolts (not included)

Performance Data

Physical Data

Contact Arrangement, Main Contacts — SPST-NO-DM (1 Form X)

Dimensions — See drawings on next page

Weight — 6.7 oz (190g)

Contact Data

Contact Arrangement, Main Contacts — SPST-NO-DM (1 Form X)

Voltage Rating, Main Contacts Switching (Max) — 900VDC

Current Rating, Main Contacts Switching —
Continuous [1] — 100A
Short Term, 3 Minutes [2] — 200A

Hot Switching Performance (Polarity Sensitive) —
50A make/break @ +400Vdc — 50,000 cycles
100A make/break @ +400Vdc — 6,000 cycles
100A make/break @ -400Vdc — 1,000 cycles
200A make/break @ +400Vdc — 500 cycles
1,000A break only @ +400Vdc —10 cycles
600A make only — 25 cycles

Maximum Short Circuit Current (1/2 cycle, 60 Hz) — 1,250A (through closed contacts)

Dielectric Withstand Voltage [3] —
Between Open Contacts — 5,600Vrms/8,000Vdc
Contacts to Coil — 2,000Vrms/4,000Vdc

Insulation Resistance, Terminal to Terminal / Terminals to Coil —
When New — 100 megohms, min. @ 500Vdc
At End of Life — 50 megohms, min. @ 500Vdc

Mechanical Life — 1 million cycles

Operate & Release Time

Operate Time Max. — 25ms

Operate Bounce Max. — 5ms

Release Time — 10ms

Environmental Data

Shock, 11ms 1/2 sine (operating) — 20G peak

Sine Vibration, 20G peak — 55-2,000 Hz.

Operating Temperature Range — -55°C to +85°C

Noise Emission (at 100 mm distance) — 70dB(a)

Notes

[1] 8.4 mm^2 conductor. Current rating depends upon conductor size. Keep terminals below 175°C max continuous.

[2] 3 minutes at +40°C ambient with 8.4 mm^2 (#8 AWG) conductor.

[3] 2,000Vrms minimum under all conditions, until end of life.

For factory-direct application assistance, dial 800-253-4560, ext. 2055, or 805-220-2055.

Catalog 5-1773450-5
Revised 3-13

www.te.com

Dimensions are shown for reference purposes only. Specifications subject to change.

Dimensions are in millimeters unless otherwise specified.

USA: +1 800 522 6752
Asia Pacific: +86 0 400 820 6015
UK: +44 800 267 666

For additional support numbers please visit www.te.com

KILOVAC CAP100 Series (Continued)

Coil Operating Voltage (Valid Over Temperature Range)			
Nominal Voltage	12Vdc	24Vdc	48Vdc
Pick Up Voltage (20°C)	8Vdc	16Vdc	33Vdc
Drop Out Voltage (20°C)	1.2Vdc	2.4Vdc	4.8Vdc
Coil Current (Nominal at 20°C, 12vdc)	461mA	250mA	122mA
Coil Power[1] Nominal @ Vnom, +20°C	5.5W	6.0W	6.0W
Pickup (Close) Voltage Max. @85˚C	9.6Vdc	19.2Vdc	38.4Vdc
Coil Resistance Nominal @ +20°C ± 5% (ohms)	26	96	392

[1] Do not exceed 8.0W coil power for extended periods

Life Cycles vs Resistive Load up to 900Vdc

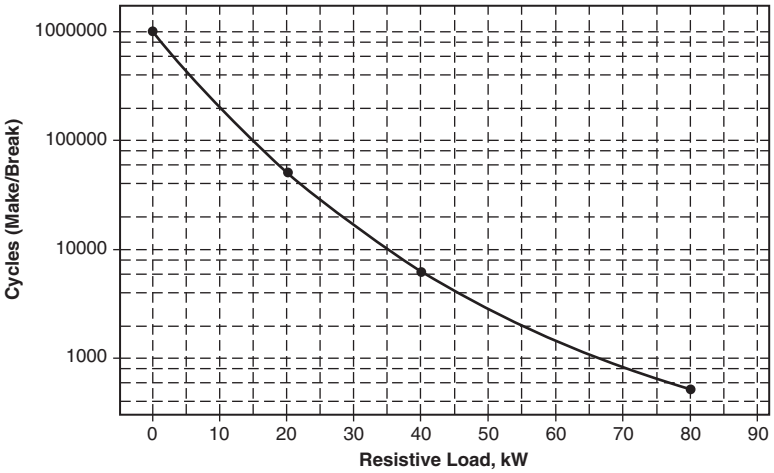

Ordering Information

Typical Part Number ▶ **CAP100 A 4 A N G**

Series:
CAP100 = 100A Contactor

Contact Arrangement:
A = 1 Form X (SPST-NO-DM)
K = NO with 1 SPDT Aux.

Coil Voltage:
4 = 12VDC
5 = 24VDC
6 = 48VDC

Coil Wire Length:
A = 15 inches [.4M]

Coil Termination:
N = None – Stripped Wires
(Consult factory for connector options)

Mounting and Power Terminals:
G = Bottom Mount (2 x #8); M5 x 10
H = Side Mount (2 x #8); M5 x 10

For factory-direct application assistance, dial 800-253-4560, ext. 2055, or 805-220-2055.

Catalog 5-1773450-5
Revised 3-13

www.te.com

Dimensions are shown for reference purposes only. Specifications subject to change.

Dimensions are in millimeters unless otherwise specified.

USA: +1 800 522 6752
Asia Pacific: +86 0 400 820 6015
UK: +44 800 267 666

For additional support numbers please visit www.te.com

KILOVAC CAP100 Series (Continued)

Bottom Mount

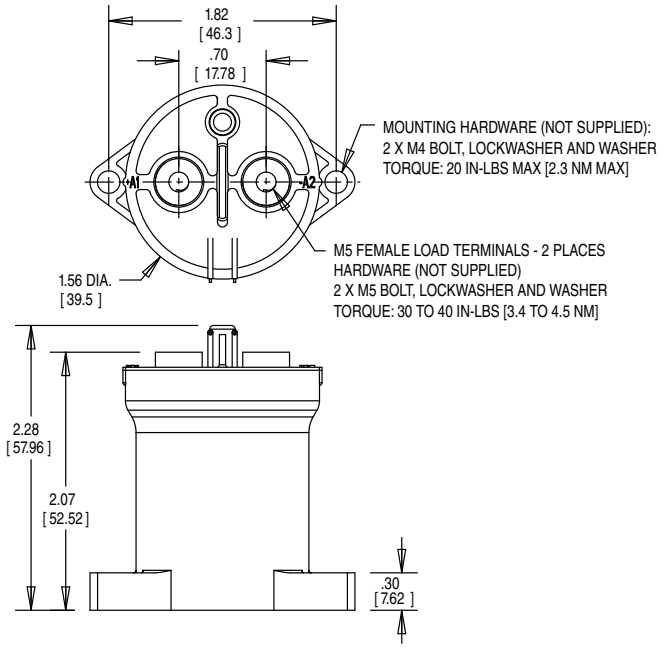

Side Mount

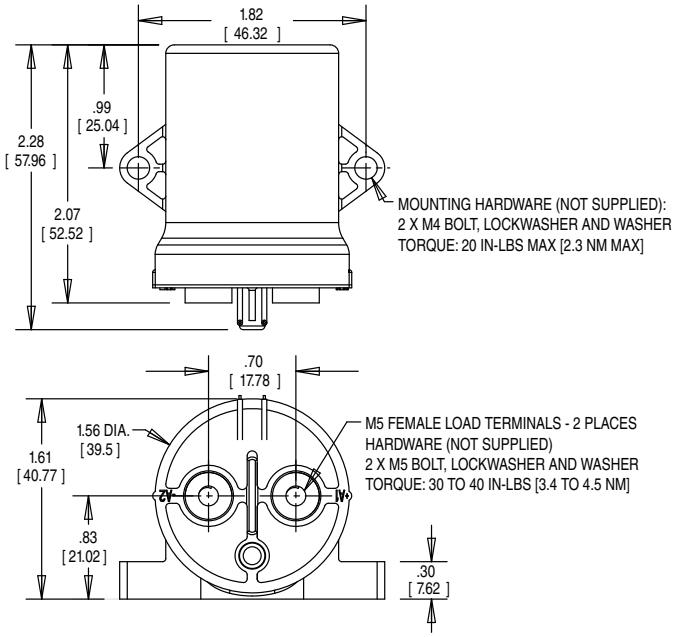

For factory-direct application assistance, dial 800-253-4560, ext. 2055, or 805-220-2055.

KILOVAC EV200 Series Contactor With 1 Form X (SPST-NO) Contacts Rated 500+ Amps, 12-900 Vdc

Product Facts

- **Designed to be the smallest, lightest weight, lowest cost sealed contactor in the industry with its current rating (500+A carry, 2000A interrupt at 320VDC)**
- **Built-in coil economizer — only 1.7W hold power @ 12VDC and it limits back EMF to 0V. Models requiring external economizer also available**
- **Optional auxiliary contact for easy monitoring of power contact position**
- **Hermetically sealed — intrinsically safe, operates in explosive/harsh environments with no oxidation or contamination of coil or contacts, during long periods of non-operation**
- **Versatile coil/power connections**
- **UL Recognized for the U.S. and Canada (File E208033) All contact ratings & coil versions may not be UL Recognized**
- **CE marked for EC applications**
- **AIAG QS9000 designed, built and approved**
- **RoHS versions available**

For factory-direct application assistance, dial 800-253-4560, ext. 2055, or 805-220-2055.

EV200 Series Contactor (CZONKA Relay, Type III)

Coil Operating Voltage (Valid Over Temperature Range)			
Voltage (Will Operate)	9-36VDC	32-95VDC	48-95VDC
Voltage (Max.)	36VDC	95VDC	95VDC
Pickup (Close) Voltage Max.	9VDC	32VDC	48VDC
Hold Voltage (Min.)	7.5VDC	22VDC	34VDC
Dropout (Open) Voltage (Min.)	6VDC	18VDC	27VDC
Inrush Current (Max.)	3.8A	1.3A	0.7A
Holding Current (Avg.)	0.13A@12V, 0.07A@24V	0.03A@48V	0.02A@72V
Inrush Time (Max.)	130ms	130ms	130ms

Ordering Information

Typical Part Number ▶ **EV200 A A A N A**

Series:
EV200 = 500+ Amp, 12-900VDC Contactor

Contact Form:
A = Normally Open
H = Normally Open with NO Aux. Contacts
G = Normally Open with NC Aux. Contacts

Coil Voltage:
A = 9-36VDC (1 = requires external coil economizer)
D = 32-95VDC (2 = requires external coil economizer)
J = 48-95VDC (3 = requires external coil economizer)
R = 28VDC with Mechanical Economizer

Coil Wire Length:
A = 15.3 in (390 mm)

Coil Terminal Connector:
N = None
C = Molex Mini-fit Jr, 2 Skt, Female 18-24, P/N 39-01-2020 & 39-00-0060 +red is pin 1 (A length only)

Mounting & Power Terminals:
A = Bottom Mount & Male 10mm x M8 Terminals

Performance Data

Contact Arrangement, Power Contacts — 1 Form A (SPST-NO)

Rated Operating Voltage — 12 - 900 VDC

Continuous (Carry) Current, Typical — 500 A @ 85°C, 400 mcm conductors
Consult Factory for required conductors for higher (500+ A) currents

Make/Break Current at Various Voltages [1] — See graph next page

Break Current at 320VDC [1] — 2,000 A, 1 cycle [3]

Contact Resistance, Typ. (@200A) — 0.2 mohms

Load Life — See graph next page

Mechanical Life — 1 million cycles

Contact Arrangement, Auxiliary Contacts — 1 Form A (SPST-NO)

Aux. Contact Current, Max. — 2A @ 30VDC / 3A @ 125VAC

Aux. Contact Current, Min. — 100mA @ 8V

Aux. Contact Resistance, Max. — 0.417 ohms @ 30VDC / .150 ohms @ 125VAC

Operate Time @ 25°C —
Close (includes bounce), Typ. — 15 ms
Bounce (after close only), Max. — 7 ms
Release (includes arcing), Max @ 2000A — 12 ms

Dielectric Withstanding Voltage — 2,200 Vrms @ sea level (leakage <1mA)

Insulation Resistance @ 500VDC — 100 megohms [2]

Shock, 11ms 1/2 Sine, Peak, Operating — 20 G

Vibration, Sine, 80-2000Hz., Peak — 20 G

Operating Ambient Temperature — -40°C to +85°C

Weight, Nominal — .95 lb. (.43 kg)

Notes:
[1] Main power contacts
[2] 50 at end of life
[3] Does not meet dielectric & IR after test, 1700 amp for unit with Aux. Contacts

Catalog 5-1773450-5
Revised 3-13

www.te.com

Dimensions are shown for reference purposes only. Specifications subject to change.

Dimensions are in millimeters unless otherwise specified.

USA: +1 800 522 6752
Asia Pacific: +86 0 400 820 6015
UK: +44 800 267 666

For additional support numbers please visit www.te.com

KILOVAC EV200 Series (CZONKA Relay, Type III) (Continued)

Outline Dimensions

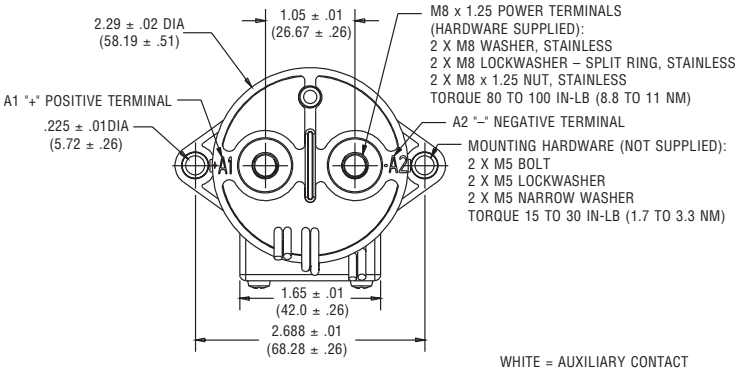

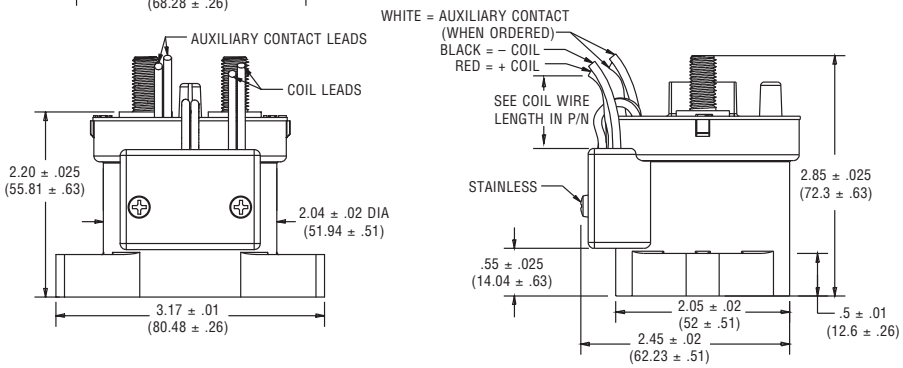

Estimated Make & Break Power Switching Ratings

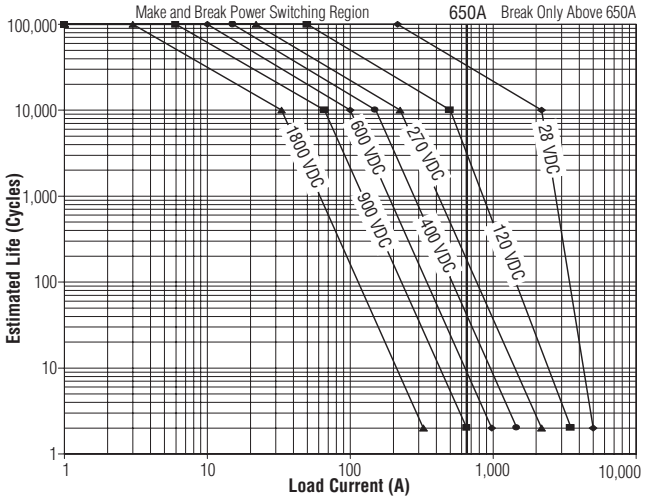

NOTES:
1) For resistive loads with 300µH maximum inductance. Consult factory for inductive loads.
2) Estimates based on extrapolated data. User is encouraged to confirm performance in application.
3) End of life when dielectric strength between terminals falls below 50 megohms @ 500VDC.
4) The maximum make current is 650A to avoid contact welding.

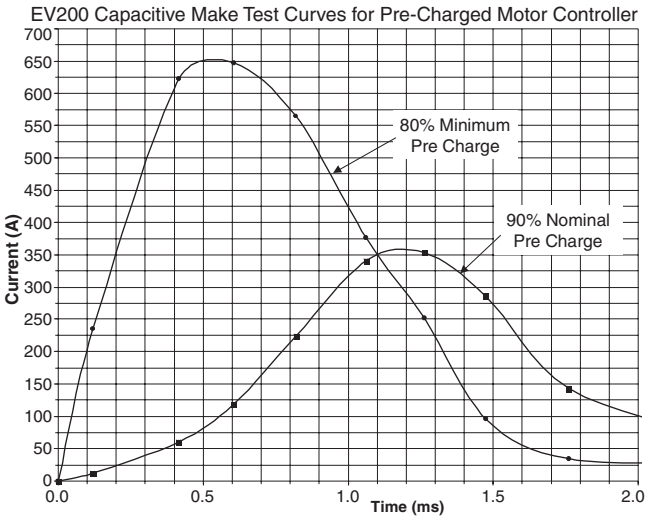

For factory-direct application assistance,
dial 800-253-4560, ext. 2055, or
805-220-2055.

KILOVAC EV200B Series Contactor With 1 Form Y (SPST-NC) Contacts Rated 500+ Amps, 12-900 Vdc

Product Facts

- **Normally closed version of popular EV200 series contactors**
- **Designed to be the smallest, lowest cost, lightest weight sealed contactor in the industry at its current rating**
- **Optional auxiliary contacts for monitoring position of power contacts**
- **Hermetically sealed — operates in explosive/harsh environments with no oxidation or contamination of coil or contacts during long periods of non-operation**
- **Not position sensitive, can be mounted in any orientation**
- **RoHS versions available**

Physical Data

Contact Arrangements — Main Contacts — SPST, Normally Closed

Dimensions — See drawing

Weight, Nominal — .95 lb. (.43 kg)

Environmental Data

Shock, 11ms 1/2 Sine (Operating) — 30 G_{peak} (Closed) 10 G_{peak} (Open)

Sine Vibration, 10 G_{peak} — 55-2000 Hz

Random Vibration, 7.1 Grms — 15 Hz (.001 G^2/Hz), 100 Hz (.04 G^2/Hz), 1000 Hz (.04 G^2/Hz), 1500 Hz (.02 G^2/Hz)

Operating Temperature Range — -40°C to +85°C

Electrical Data

Voltage Rating — Main Contacts (Max) — 750 Vdc

Current Rating, Continuous — Main Contacts [1] — 500A

Contact Resistance — Main Contacts [2] — 0.2 mΩ max above 300A 0.3 mΩ max between 50 and 300A

Hot Switching Performance (Positive Polarity) [3] — 200A make/ break @ 270Vdc — 10,000 cycles
600A make/ break @ 360Vdc — 100 cycles
800A break only @ 360Vdc — 15 cycles
1500A break only @ 360Vdc — 1 cycle

Mechanical Life (Min) — 1 million cycles

Dielectric Withstand Voltage — Terminal to Terminal/ Terminals to Coil — 1mA max @ 2,200 Vrms

Insulation Resistance — Terminal to Terminal/ Terminals to Coil — 100MΩ min @ 500Vdc new
50MΩ min @ 500Vdc end of life

Coil Data [4]

Nominal Coil Voltage [5] — Low range — 9.6-14 Vdc
High range — 19-28 Vdc

Pick Up (Max) @ 25°C — 9.6/18.5 Vdc

Pick Up @ Max Coil Temperature — 10.5/22 Vdc

Hold (Min) — 6/12 Vdc

Dropout (Min) — 4/9 Vdc

Pickup Current, Peak [6] **@ 25°C** — 6 A

Operate Specs @ 25°C — Operate Time (Typ) — 15 ms
Operate Bounce (Max) — 5 ms
Release Time (Typ) — 15 ms

Economizer Operating Frequency — 18 kHz

Hold Current — 0.9A/12 Vdc
0.3A/24 Vdc

Notes:

1 Ambient conditions and conductor design affect rating. Terminal temperature rise should be 75°C max above ambient. Keep relay terminals below 150°C max continuous, 175°C max for two hours, and 200°C for 1 minute.

2 Stabilized reading. Contact resistance may exceed spec in the first 10 minutes of current carry.

3 Units are polarity sensitive. Approximately 50% de-rating for reverse polarity switching. Consult factory for review of specific requirements.

4 Over temperature range unless noted.

5 Voltage ranged sensed by contactor 10 ms after application of source voltage.

6 Pickup duration 100 ms.

Ordering Information

Typical Part Number ▶ **EV200 B A A N A**

Series:
EV200 = 500+ Amp, 12-900VDC Contactor

Contact Form:
B = Normally Closed
D = Normally Closed, 1 SPDT Aux.

Coil Voltage (with Economizer):
A = 12/24 Vdc

Coil Terminals:
A = 15.3 in. (300 mm)

Coil Terminal Connector:
N = None

Mounting & Power Terminations:
A = Bottom Mount & Male 10 Max. M8 Threaded Terminals

For factory-direct application assistance, dial 800-253-4560, ext. 2055, or 805-220-2055.

Catalog 5-1773450-5
Revised 3-13

www.te.com

Dimensions are shown for reference purposes only. Specifications subject to change.

Dimensions are in millimeters unless otherwise specified.

USA: +1 800 522 6752
Asia Pacific: +86 0 400 820 6015
UK: +44 800 267 666

For additional support numbers please visit www.te.com

KILOVAC EV200B Series Contactor (Continued)

Outline Dimensions

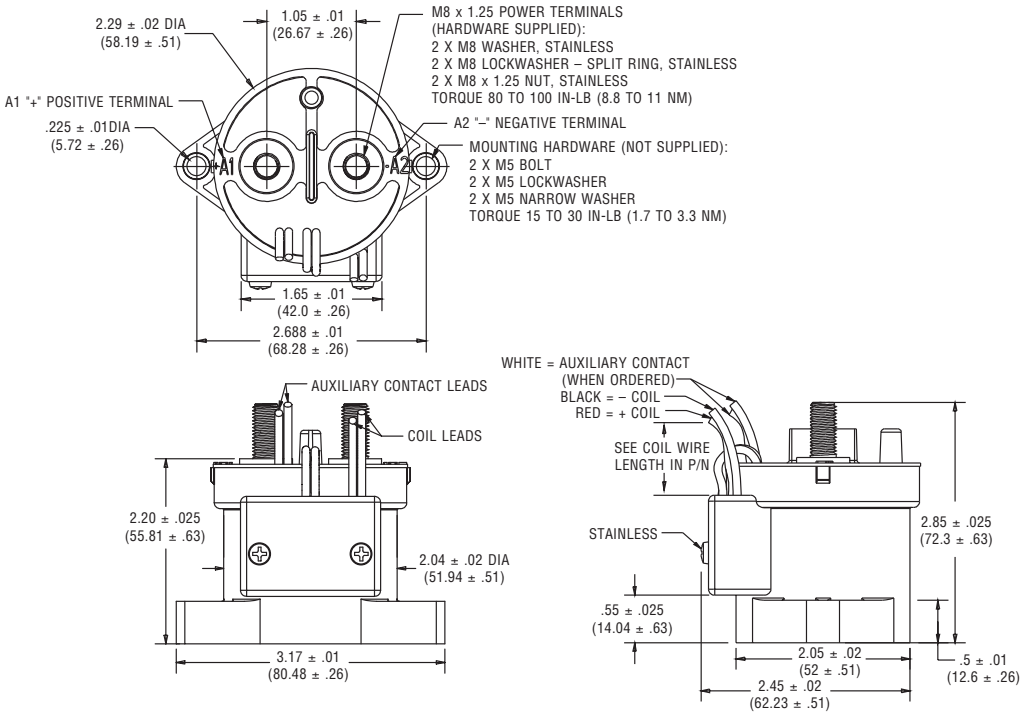

For factory-direct application assistance,
dial 800-253-4560, ext. 2055, or
805-220-2055.

KILOVAC EV200P Series Latching Contactor With 1 Form X (SPST Latch) Contacts Rated 500+ Amps, 12-900 Vdc

Product Facts

- **Latching version of popular EV200 Series**
- **Designed to be the smallest, lowest cost, lightest weight sealed contactor in the industry at its current rating**
- **Optional auxiliary contacts for monitoring position of power contacts**
- **Hermetically sealed — operates in explosive/harsh environments with no oxidation or contamination of coil or contacts during long periods of non-operation**
- **Not position sensitive, can be mounted in any orientation**
- **RoHS versions available**

Physical Data

Contact Arrangements — Main Contacts — SPST, Latching
Auxiliary Contacts [1] — Up to 2 Form A

Dimensions — See drawing

Weight, Nominal — .95 lb. (.43 kg)

Environmental Data

Shock, 11ms 1/2 Sine (Operating) — 30 G_{peak}

Sine Vibration, 20 G_{peak} — 55-2000 Hz

Random Vibration, 14.06 Grms — 15 Hz (.002 G^2/Hz), 100 Hz (.002 G^2/Hz), 450 Hz (.12 G^2/Hz), 900 Hz (.12 G^2/Hz), 2000 Hz (.083 G^2/Hz)

Operating Temperature Range — -40°C to +85°C

Electrical Data

Voltage Rating — Main Contacts (Max) — 750 Vdc

Current Rating, Continuous — Main Contacts [2] — 500A

Contact Resistance — Main Contacts [3] —
0.2 mΩ max above 300A
0.3 mΩ max between 50 and 300A

Hot Switching Performance (Positive Polarity) [4] —
200A make/ break @ 270Vdc — 10,000 cycles
600A make/ break @ 360Vdc — 100 cycles
800A break only @ 360Vdc — 15 cycles
2000A break only @ 360Vdc — 1 cycle

Mechanical Life (Min) — 1 million cycles

Dielectric Withstand Voltage — Terminal to Terminal/ Terminals to Coil — 1mA max @ 2,200 Vrms

Insulation Resistance — Terminal to Terminal/ Terminals to Coil —
100MΩ min @ 500Vdc new
50MΩ min @ 500Vdc end of life

Coil Data [5]

Nominal Coil Voltage [6] — 12 Vdc

Pick Up/Latch (Max) @ 25°C — 9 Vdc

Hold (Min) — N/A

Reset (Max)/Dropout (Min) — 9 Vdc

Duty Cycle, Max [7] — 20%

Coil Resistance @ 25°C — 2.5 Ω

Operate Specs @ 25°C —
Operate Time (Typ) — 15 ms
Operate Bounce (Max) — 7 ms
Release Time (Max) — 15 ms

Notes:

1. Product can be configured alternately with form B or C auxiliary switches if required. This changes the product part number, depending on specific auxiliary configuration. Consult TE for availability and part number
2. Ambient conditions and conductor design affect rating. Terminal temperature rise should be 75°C max above ambient. Keep relay terminals below 150°C max continuous, 175°C max for two hours, and 200°C for 1 minute.
3. Stabilized reading. Contact resistance may exceed spec in the first 10 minutes of current carry.
4. Units are polarity sensitive. Approximately 50% de-rating for reverse polarity switching. Consult factory for review of specific requirements.
5. Over temperature range unless noted. Suggested coil pulse = 50-100 ms.
6. 24V and 48V coils available on request — consult factory.
7. Intermittent Duty Coil. Coil overheating can occur if duty cycle is exceeded. Limit average coil power to 10W maximum.

Ordering Information

Typical Part Number ▶ **EV200 P 4 A N A**

Series:
EV200 = 500+ Amp, 12-900VDC Contactor

Contact Form:
P = Latching
F = Latching with 1 SPDT Aux.

Coil Voltage:
4 = 12 Vdc
5 = 24 Vdc
6 = 48 Vdc

Coil Terminations:
A = 15.3 in. (300 mm)

Coil Termination Connector:
N = None

Mounting & Power Terminals:
A = Bottom Mount & Male 10mm x M8 Threaded Terminals

For factory-direct application assistance, dial 800-253-4560, ext. 2055, or 805-220-2055.

Catalog 5-1773450-5
Revised 3-13

www.te.com

Dimensions are shown for reference purposes only. Specifications subject to change.

Dimensions are in millimeters unless otherwise specified.

USA: +1 800 522 6752
Asia Pacific: +86 0 400 820 6015
UK: +44 800 267 666

For additional support numbers please visit www.te.com

KILOVAC EV200P Series Latching Contactor (Continued)

Outline Dimensions

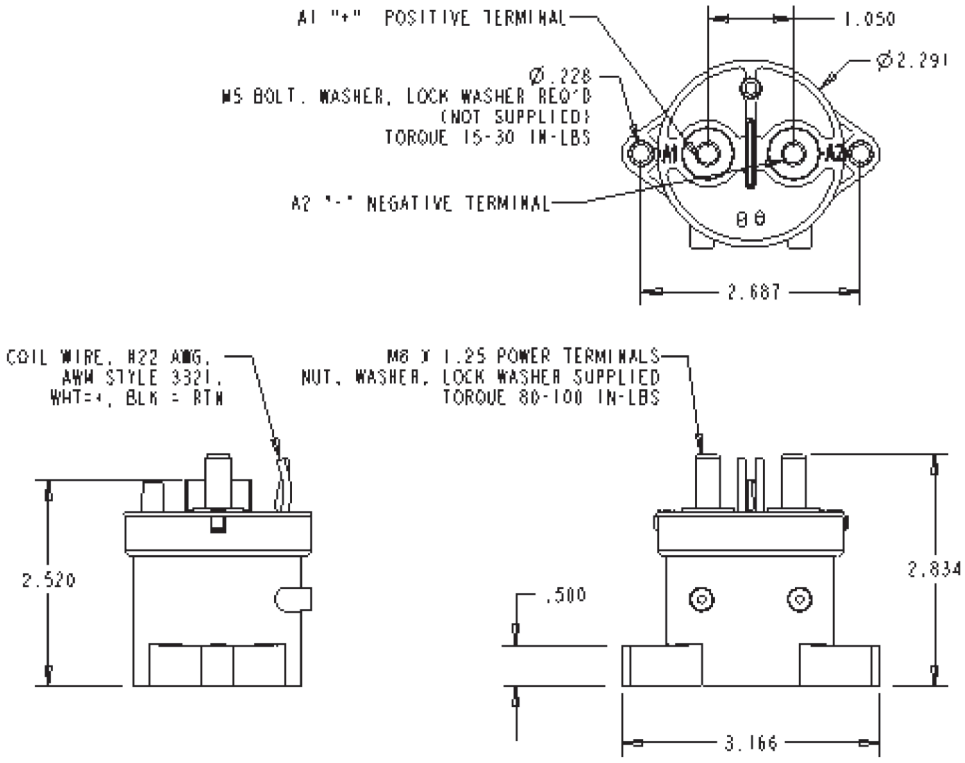

For factory-direct application assistance, dial 800-253-4560, ext. 2055, or 805-220-2055.

KILOVAC EV100 Series Contactor With 1 Form X Contacts Rated 100 Amps Continuous, 600 Vdc

Product Facts

- **Hermetically sealed**
- **Operates in explosive/ harsh environments without oxidation or contamination of contacts, during long periods of non-operation**
- **8kV isolation between open contacts permits use for high voltage isolation and carry**
- **Coil economizer allows for operation between 9-36 VDC**
- **Designed and built in accordance with AS 9100**

Description

Low cost, 600 Vdc, 100 amp, hermetically sealed DC contactor

Economized coil for low power consumption between 9-36 VDC

Bottom mount, not position sensitive

One million cycle mechanical life

Applications

Power/motor control circuit isolation, circuit protection and safety in industrial machinery

Automotive battery switching and backup

Solar inverter switching

Automotive pre-charge

Test Equipment

Power distribution

Electrical

Contact arrangement: SPST-NO (Form X., Double Make)

Voltage rating:
5-600 Vdc at 100 Amps

50K cycles Make/Break:
50 Amps at 400 Vdc

25K cycles Make/Break:
50 Amps at 600 Vdc

Holding current:
0.15 Amps at 24 Vdc

Operate time: 30 ms max.

Physical or Other Properties

Hermetically sealed

Safe for harsh/corrosive environments

No contact oxidation over periods of non-use

Mechanical

Small size: 1.5” x 1.5” approximately

Weight: 130 grams

Performance Data

Physical Data

Contact Arrangement, Main Contacts — SPST-NO (Form X)

Dimensions — See drawings on next page

Weight — 4.58 oz (130g)

Electrical Data

Voltage Rating, Main Contacts Switching (Max) — 750VDC

Current Rating, Main Contacts Switching —
Continuous [1] — 100A
Short Term, 3 Minutes [2] — 200A

Contact Voltage Drop, Main Contacts — 0.05 max @ rated current

Resistive Load Performance (polarity sensitive) —
50A make/break @ +400Vdc — 50,000 cycles

50A make/break @ +600Vdc — 25,000 cycles

100A make/break @ +400Vdc — 6,000 cycles

100A make/break @ +600Vdc — 5,000 cycles

100A make/break @ -400Vdc — 1,000 cycles

100A make/break @ -600Vdc — 25 cycles

200A make/break @ +400Vdc — 500 cycles

200A make/break @ +600Vdc — 200 cycles

1,000A break only @ +400Vdc — 5 cycles

600A break only @ +600Vdc — 5 cycles

600A make only — 10 cycles

Maximum Short Circuit Current (1/2 cycle, 60 Hz) — 1,250A (through closed contacts)

Dielectric Withstand Voltage —
Between Open Contacts — 2,2000Vrms
Contacts to Coil — 1,500Vrms/4,000Vdc

Insulation Resistance, Terminal to Terminal / Terminals to Coil —
When New — 100 megohms, min. @ 500Vdc
At End of Life — 50 megohms, min. @ 500Vdc

Mechanical Life — 106

Operate & Release Time

Operate Time Max. — 30ms

Operate Bounce Max. — 5ms

Release Time — 10ms

Environmental Data

Shock, 11ms 1/2 sine (operating) — 20G peak

Sine Vibration, 20G peak — 55-2,000 Hz.

Operating Temperature Range — -40°C to +85°C

Noise Emission (at 100 mm distance) — 70dB(a)

Notes

[1] 8.4mm² conductor. Current rating is affected by conductor size. Keep terminals below 150˚C max. continuous.

[2] 3 minutes at +40˚C ambient, 1 minute at –80˚C ambient with 8.4mm² (#8 AWG) conductor.

For factory-direct application assistance, dial 800-253-4560, ext. 2055, or 805-220-2055.

Catalog 5-1773450-5
Revised 3-13

www.te.com

Dimensions are shown for reference purposes only. Specifications subject to change.

Dimensions are in millimeters unless otherwise specified.

USA: +1 800 522 6752
Asia Pacific: +86 0 400 820 6015
UK: +44 800 267 666

For additional support numbers please visit www.te.com

KILOVAC EV100 Series (Continued)

Outline Dimensions

Bottom Mount

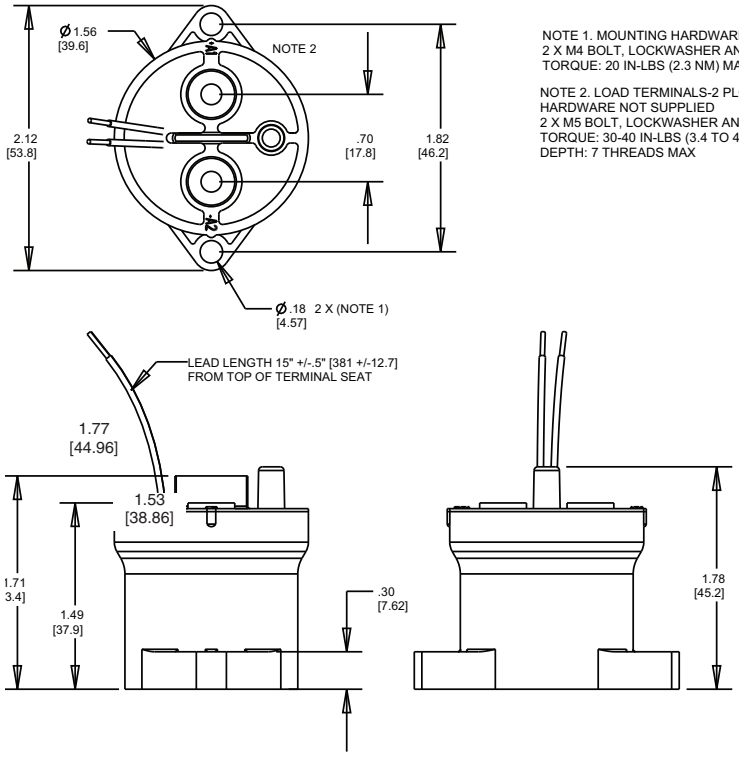

NOTE 1. MOUNTING HARDWARE (NOT SUPPLIED)
2 X M4 BOLT, LOCKWASHER AND WASHER
TORQUE: 20 IN-LBS (2.3 NM) MAX

NOTE 2. LOAD TERMINALS-2 PLCS
HARDWARE NOT SUPPLIED
2 X M5 BOLT, LOCKWASHER AND WASHER
TORQUE: 30-40 IN-LBS (3.4 TO 4.5 NM)
DEPTH: 7 THREADS MAX

Coil Data (Internal Coil Economizer)	
Coil Voltage Range	9-32 Vdc
Maximum Pickup Current (20˚C)	1.5A
Average Holding Current (20˚C)	0.25A@12Vdc/0.15A@24Vdc
Pickup Voltage (20C)	≥ 9Vdc
Dropout Voltage	≤ 8Vdc
Pickup Pulse (max.)	100 ms
Coil Resistance +/-5% (20˚C)	8.0 Ω
Coil Economizer Frequency	19.6 kHz
Coil Power Typ. (over temp range)	3-4W

Ordering Information

Typical Part Number ▶ **EV100 A A A N A**

Series:
EV100 = 100A, 600 Vdc Contactor

Contact Form:
A = Normally Open

Coil Voltage:
9-36 Vdc

Coil Wire Length:
A = 15 inches [.4M]

Coil Termination:
N = None – Stripped Wires

Mounting:
A = Bottom Mount 2X #8, M5X10 Mains

Specifications are subject to change without notice.

For factory-direct application assistance,
dial 800-253-4560, ext. 2055, or
805-220-2055.

Catalog 5-1773450-5
Revised 3-13

www.te.com

Dimensions are shown for reference purposes only. Specifications subject to change.

Dimensions are in millimeters unless otherwise specified.

USA: +1 800 522 6752
Asia Pacific: +86 0 400 820 6015
UK: +44 800 267 666

For additional support numbers please visit www.te.com

KILOVAC LEV100 Series 900 Vdc Contactor With 1 Form X Contacts Rated 100A Continuous

Product Facts

- **Hermetically sealed — intrinsically safe. Operates in explosive/harsh environments without oxidation or contamination of contacts, including long periods of non-operation**
- **8kV isolation between open contacts permits use for high voltage isolation and carry**
- **12, 24 and 48 Vdc coils**
- **Designed and built in accordance to AIAG QS9000**
- **Not position sensitive, can be mounted in any orientation**
- **Solid copper contacts**
- **UL Recognized for the U.S. and Canada (File E208033) All contact ratings & coil versions may not be UL Recognized**
- **RoHS versions available**

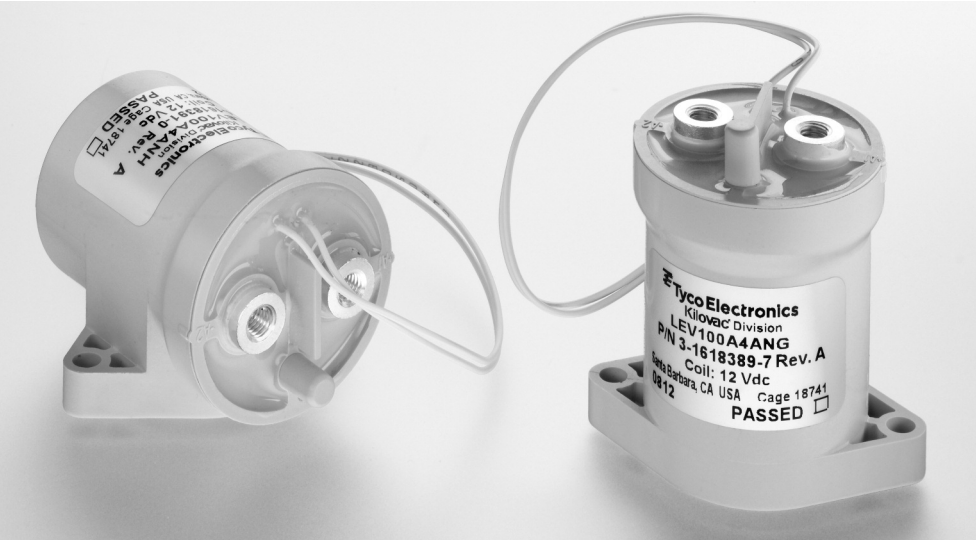

Description

Lowest cost, 900 Vdc 100 amp, hermetically sealed DC contactor in the industry

Compact package available in side- or bottom-mount configurations, not position sensitive

Applications

Power/motor control circuit isolation, circuit protection and safety in industrial machinery

Automotive battery switching and backup

Mechanical

Compact epoxy-sealed resin enclosure occupies only about 4 in^3 (65.5 cm^3)

Robust integral mounting plate on either bottom or side of enclosure accepts two M4 screws

Inert gas filled contact chamber

Flying leads for coil connections

Load terminals threaded for M5 bolts (not included)

Performance Data

Physical Data

Contact Arrangement, Main Contacts — SPST-NO-DM (1 Form X)

Dimensions — See drawings on next page

Weight — 6.7 oz (190g)

Contact Data

Contact Arrangement, Main Contacts — SPST-NO-DM (1 Form X)

Voltage Rating, Main Contacts Switching (Max) — 900VDC

Current Rating, Main Contacts Switching —
Continuous [1] — 100A
Short Term, 3 Minutes [2] — 200A

Hot Switching Performance (Polarity Sensitive) —
50A make/break @ +400Vdc — 50,000 cycles
100A make/break @ +400Vdc — 6,000 cycles
100A make/break @ -400Vdc — 1,000 cycles
200A make/break @ +400Vdc — 500 cycles
1,000A break only @ +400Vdc — 250 cycles
600A make only — 25 cycles

Maximum Short Circuit Current (1/2 cycle, 60 Hz) — 1,250A (through closed contacts)

Dielectric Withstand Voltage [3] —
Between Open Contacts — 5,600Vrms/8,000Vdc
Contacts to Coil — 2,000Vrms/4,000Vdc

Insulation Resistance, Terminal to Terminal / Terminals to Coil —
When New — 100 megohms, min. @ 500Vdc
At End of Life — 50 megohms, min. @ 500Vdc

Mechanical Life — 1 million cycles

Operate & Release Time

Operate Time Max. — 25ms

Operate Bounce Max. — 5ms

Release Time — 10ms

Environmental Data

Shock, 11ms 1/2 sine (operating) — 20G peak

Sine Vibration, 20G peak — 55-2,000 Hz.

Operating Temperature Range — -40°C to +85°C

Noise Emission (at 100 mm distance) — 70dB(a)

Notes

[1] 8.4 mm^2 conductor. Current rating depends upon conductor size. Keep terminals below 175°C max continuous.

[2] 3 minutes at +40°C ambient with 8.4 mm^2 (#8 AWG) conductor.

[3] 2,000Vrms minimum under all conditions, until end of life.

For factory-direct application assistance, dial 800-253-4560, ext. 2055, or 805-220-2055.

Catalog 5-1773450-5
Revised 3-13

www.te.com

Dimensions are shown for reference purposes only. Specifications subject to change.

Dimensions are in millimeters unless otherwise specified.

USA: +1 800 522 6752
Asia Pacific: +86 0 400 820 6015
UK: +44 800 267 666

For additional support numbers please visit www.te.com

KILOVAC LEV100 Series 900 Vdc Contactor (Continued)

Coil Operating Voltage (Valid Over Temperature Range)			
Nominal Voltage	12Vdc	24Vdc	48Vdc
Maximum Voltage	16Vdc	28Vdc	52Vdc
Pick Up Voltage (20°C)	8Vdc	16Vdc	33Vdc
Drop Out Voltage (20°C)	≤1.2Vdc	≤2.4Vdc	≤4.8Vdc
Coil Current (Nominal at 20°C, 12vdc)	461mA	250mA	122mA
Coil Power Nominal @ Vnom, +20°C	5.5W	6.0W	6.0W
Pickup (Close) Voltage Max. @85˚C	9.6Vdc	19.2Vdc	38.4Vdc
Coil Resistance Nominal @ +20°C ± 5% (ohms)	26	96	392

Life Cycles vs Resistive Load up to 900Vdc

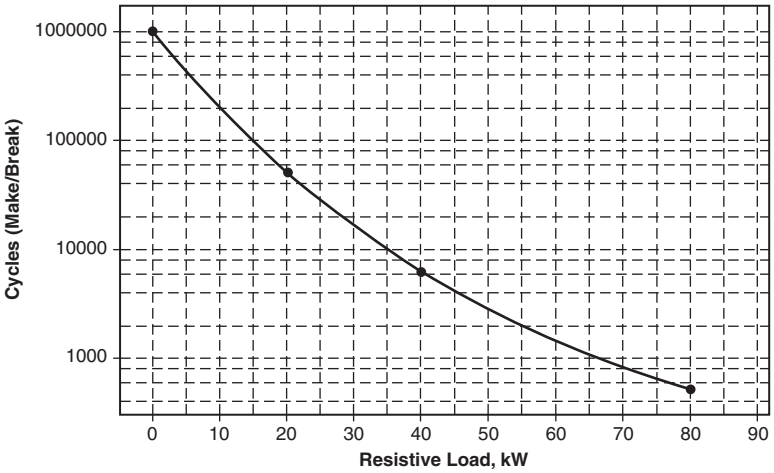

Ordering Information

Typical Part Number ▶ **LEV100 A 4 A N G**

Series:
LEV100 = 100A Contactor

Contact Arrangement:
A = 1 Form X (SPST-NO-DM)

Coil Voltage:
4 = 12VDC
5 = 24VDC
6 = 48VDC

Coil Wire Length:
A = 15 inches [.4M]

Coil Termination:
N = None – Stripped Wires

Mounting and Power Terminals:
G = Bottom Mount (2 x #8); M5 x 10
H = Side Mount (2 x #8); M5 x 10

For factory-direct application assistance, dial 800-253-4560, ext. 2055, or 805-220-2055.

Catalog 5-1773450-5
Revised 3-13

www.te.com

Dimensions are shown for reference purposes only. Specifications subject to change.

Dimensions are in millimeters unless otherwise specified.

USA: +1 800 522 6752
Asia Pacific: +86 0 400 820 6015
UK: +44 800 267 666

For additional support numbers please visit www.te.com

KILOVAC LEV100 Series 900 Vdc Contactor (Continued)

Bottom Mount

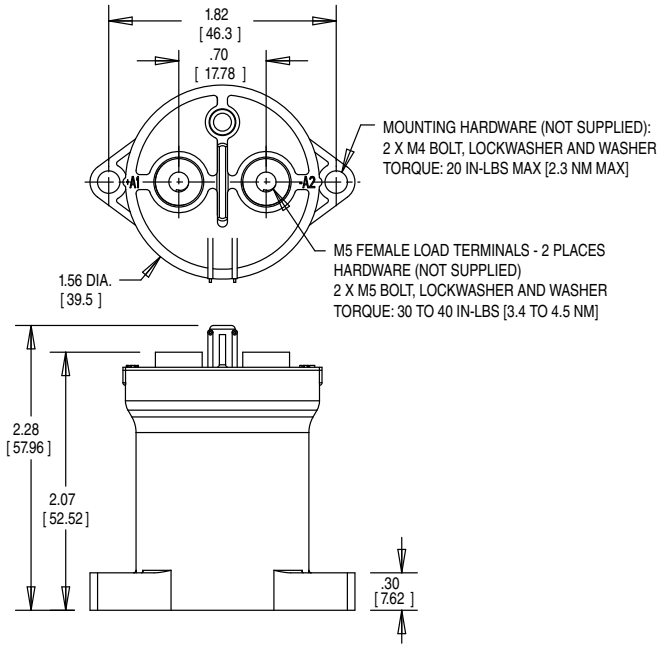

Side Mount

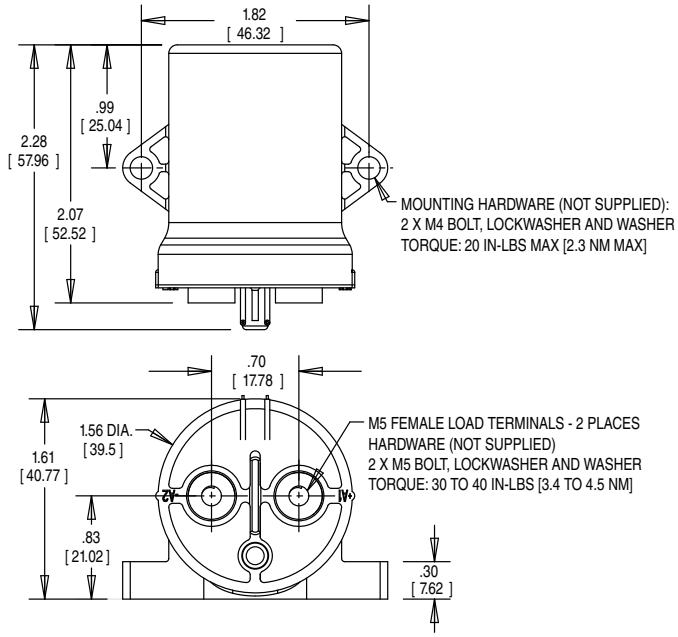

Product Offering

Bottom Mount Models			
3-1618389-7	LEV100A4ANG	12Vdc coil	15" [.4m] leads
9-1618389-8	LEV100A5ANG	24Vdc coil	15" [.4m] leads
3-1618391-7	LEV100A6ANG	48Vdc coil	15" [.4m] leads
Side Mount Models			
4-1618391-0	LEV100A4ANH	12Vdc coil	15" [.4m] leads
4-1618391-1	LEV100A5ANH	24Vdc coil	15" [.4m] leads
4-1618391-2	LEV100A6ANH	48Vdc coil	15" [.4m] leads

For factory-direct application assistance, dial 800-253-4560, ext. 2055, or 805-220-2055.

Dimensions are shown for reference purposes only. Specifications subject to change.

Dimensions are in millimeters unless otherwise specified.

USA: +1 800 522 6752
Asia Pacific: +86 0 400 820 6015
UK: +44 800 267 666

For additional support numbers please visit www.te.com

KILOVAC LEV200 Series Contactor With 1 Form X Contacts Rated 500+ Amps, 12-900Vdc

Product Facts

- **Designed to be the lowest cost sealed contactor in the industry with its current rating (500+A carry, 2000A interrupt at 320Vdc)**
- **Available with bottom or side mounting — not position sensitive**
- **Optional auxiliary contact for easy monitoring of power contact position**
- **Hermetically sealed — intrinsically safe, operates in explosive/harsh environments with no oxidation or contamination of coils or contacts, including long periods of non-operation**
- **Typical applications include battery switching and backup, DC voltage power control, circuit protection and safety**
- **Versatile coil/power connections**
- **Designed and built in accordance to AIAG QS9000**
- **RoHS compliant**

For factory-direct application assistance, dial 800-253-4560, ext. 2055, or 805-220-2055.

Coil Data (Valid Over Temperature Range) [4]				
Nominal Voltage	12Vdc	24Vdc	48Vdc	72Vdc
Pickup Voltage (Will Operate)	9.0Vdc	19.0Vdc	38.0Vdc	57.0Vdc
Voltage (Max.)	15Vdc	30Vdc	60Vdc	90Vdc
Dropout Voltage	0.75 - 2.0Vdc	1.0 - 5.0Vdc	2.0 - 7.0Vdc	3.0 - 12.0Vdc
Coil Resistance @ 25° (Typ.)	11 ohms	40 ohms	145 ohms	357 ohms

Ordering Information

Typical Part Number ▶ **LEV200 A 4 N A A**

Series:
LEV200 = 500+ Amp, 12-900Vdc Contactor

Contact Form:
A = Normally Open
H = Normally Open with Aux. Contacts. (Option "H" requires option "A" in Coil Wire Length and option "N" in Coil Terminal Connector.)
Note: Other auxiliary contact forms available. Consult factory.

Coil Voltage:
4 = 12Vdc 5 = 24Vdc B = 28Vdc
6 = 48Vdc K = 72Vdc
8 = 96Vdc L = 110Vdc O = 115Vac 9 = 240Vac
Notes: Consult factory for detailed specifications and availability of coils not listed in "Coil Data" table above. In coil voltage codes, 115Vac is designated by the letter "O" rather than the numeral "0."

Coil Wire Length:
A = 15.3 in (390 mm) N = None (Requires option "A" in next step.)

Coil Terminal Connector:
N = None, stripped wires (Requires option "A" in previous step.)
A = Studs, #10-32 Threaded (Electrical connection is made to the tab at the base of the stud.)
Note: Specify option A, stripped wires, for coil voltages > 96Vdc

Mounting & Power Terminals:
A = Bottom Mount & Male 10mm x M8 Threaded Terminals
F = Side Mount & Male 10mm x M8 Threaded Terminals

Consult factory regarding other available mountings and power terminals.

Performance Data

Contact Arrangement, Power Contacts — 1 Form X (SPST-NO-DM)

Rated Operating Voltage — 12 - 900 VDC

Continuous (Carry) Current, Typical — 500 A @ 65°C, 400 mcm conductors
Consult TE for required conductors for higher (500+ A) currents

Make/Break Current at Various Voltages [1] — See graph next page

Break Current at 320VDC [1] — 2,000 A, 1 cycle [3]

Contact Resistance, Typ. (@200A) — 0.2 mohms

Load Life — See graph next page

Mechanical Life — 1 million cycles

Contact Arrangement, Auxiliary Contacts — 1 Form A (SPST-NO)

Aux. Contact Current, Max. — 2A @ 30VDC / 3A @ 125VAC

Aux. Contact Current, Min. — 100mA @ 8V

Aux. Contact Resistance, Max. — 0.417 ohms @ 30VDC / .150 ohms @ 125VAC

Operate Time @ 25°C —
Close (includes bounce), Typ. — 25 ms
Bounce (after close only), Max. — 7 ms
Release (includes arcing), Max @ 2000A — 12 ms

Dielectric Withstanding Voltage — 2,200 Vrms @ sea level (leakage <1mA)

Insulation Resistance @ 500VDC — 100 megohms [2]

Shock, 11ms 1/2 Sine, Peak, Operating — 20 G

Vibration, Sine, 80-2000Hz., Peak — 20 G

Operating Ambient Temperature — -40°C to +85°C

Weight, Typical — 1.3 lb. (.60 kg)

Notes:
[1] Main power contacts
[2] 50 at end of life
[3] Does not meet dielectric & IR after test, 1700 amp for unit with Aux. Contacts
[4] Contacts will operate with $0.8V_{nom} < V_{coil} < 1.1V_{nom}$ over temperature range.

Invalid Combinations/Reason
LEV200H-NA_ No auxiliary function with coil studs
LEV200_ONA_ No coil studs with rectifier circuit
LEV200_9NA_ No coil studs with rectifier circuit
LEV200_O_F No side mont with rectifier circuit
LEV200_9_F No side mount with rectifier circuit

Catalog 5-1773450-5
Revised 3-13

www.te.com

Dimensions are shown for reference purposes only. Specifications subject to change.

Dimensions are in millimeters unless otherwise specified.

USA: +1 800 522 6752
Asia Pacific: +86 0 400 820 6015
UK: +44 800 267 666

For additional support numbers please visit www.te.com

KILOVAC LEV200 Series (Continued)

Outline Dimensions

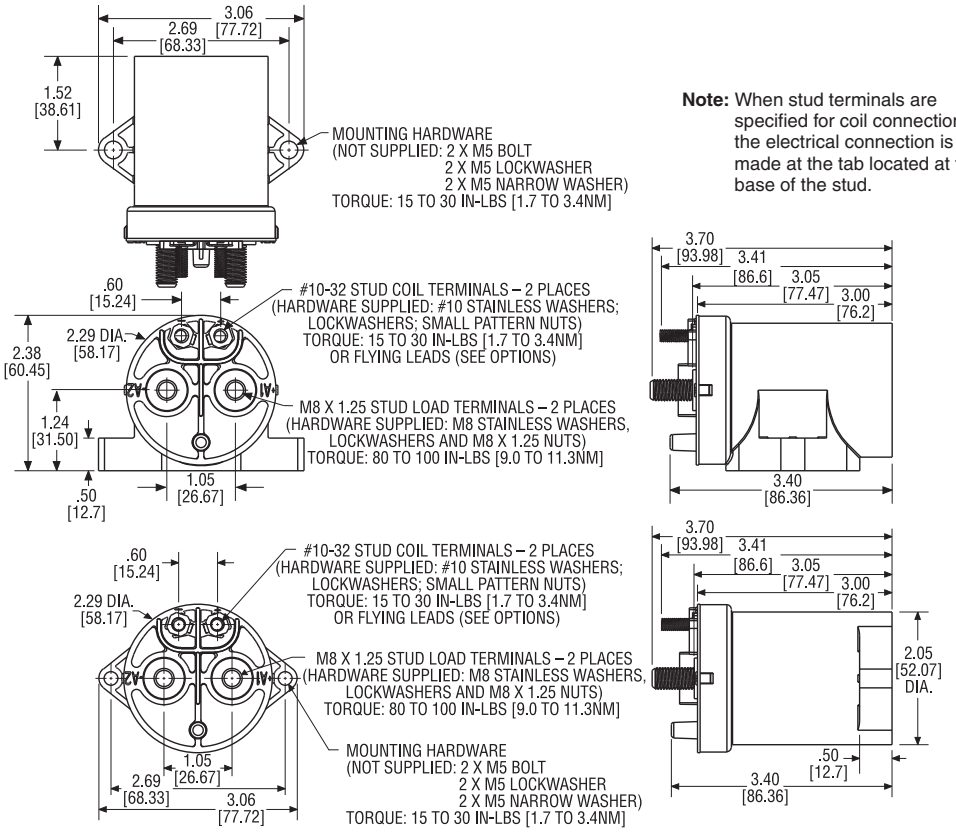

Note: When stud terminals are specified for coil connections, the electrical connection is made at the tab located at the base of the stud.

Estimated Make & Break Power Switching Ratings

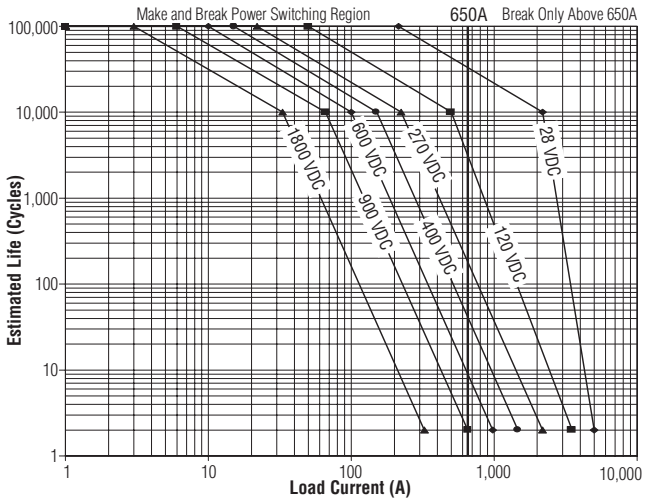

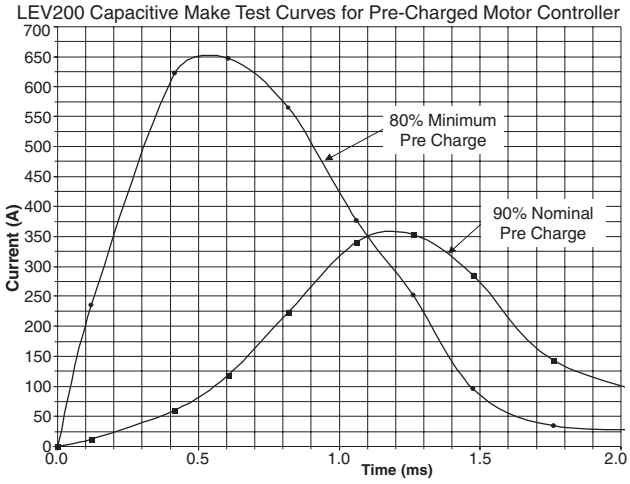

NOTES:
1) For resistive loads with 300µH maximum inductance. Consult factory for inductive loads.
2) Estimates based on extrapolated data. User is encouraged to confirm performance in application.
3) End of life when dielectric strength between terminals falls below 50 megohms @ 500VDC.
4) The maximum make current is 650A to avoid contact welding.

For factory-direct application assistance,
dial 800-253-4560, ext. 2055, or
805-220-2055.

Catalog 5-1773450-5
Revised 3-13

www.te.com

Dimensions are shown for reference purposes only. Specifications subject to change.

Dimensions are in millimeters unless otherwise specified.

USA: +1 800 522 6752
Asia Pacific: +86 0 400 820 6015
UK: +44 800 267 666

For additional support numbers please visit www.te.com

FM200 ("Flatman III") Series Contactor
200 Amps, 480 VAC (50/60 Hz), or 48 Vdc, 1-, 2-, or 3-poles

Product Facts

- **Multi-pole configurations**
- **Normally open, normally closed and mixed contact arrangements**
- **Optional quick connect tabs for sensing**
- **Small, lightweight & cost-effective – designed to be the smallest, lowest cost contactor in the industry with its current rating**
- **Standard models available with 12VDC, 24VDC and 115 VAC coils. Consult factory for 240VAC coil models.**
- **1 Form A auxiliary contacts**

c UL us File E208033

For factory-direct application assistance, dial 800-253-4560, ext. 2055, or 805-220-2055.

Product Specifications

Parameter	Units	Value for FM200 Series
Contact Arrangement		1, 2 or 3 poles
Contact Form (per pole)		Form X or Y (NO-DM or NC-DB)
Rated Operating Voltage	V	480Vrms (L-L) or 48VDC
Max. Contact Voltage (transient)	V	750Vrms or 60VDC
Continuous (Carry) Current	Arms or ADC	200/pole (Form X) 150/pole (Form Y)
Power Switching Form X (0.7-1.0 PF)	Cycles	2,000 @ 300Arms 10,000@ 200Arms 20,000 @ 100Arms 5,000 @ 200A/48VDC 2 million @ 50A/28VDC
Power Switching Form Y (0.7-1.0 PF)	Cycles	2,000 @ 225Arms 10,000@ 150Arms 20,000 @ 75Arms 5,000 @ 150A/48VDC 2 million @ 35A/28VDC
Mechanical Life	Cycles	>2 million
Contact Voltage Drop	mV	75 for Form X or Form Y
Auxiliary Contact Arrangement		1 Form A (SPST-NO)
Auxiliary Contact Rating	Arms or ADC	1 @ 30VDC, 3 @ 125VAC
Dielectric Withstanding Voltage	Vrms	2,200 @ sea level
Insulation Resistance @ 500VDC	Megohms	100
Shock, 11ms 1/2 sine, peak	G	10
Vibration, sine, 10-2000Hz.	G	5
Operating Temperature	°C	-20 to +60
Storage Temperature	°C	-40 to +85
Ambient Humidity	%RH	0 to 95
Weight	oz. / kg	17.6 - 49.4 / 0.5 -1.4

See Outline Dimensions for model-specific weight information.

Available Pole Configurations and Applicable Coil Codes

No. of NC Poles (across) No. of NO Poles (down)	0	1	2	3
0		Y Coil D	YY Coil D	YYY Coil D
1	X Coil A/B/C/E	XY Coil A/B/C/E	YXY Coil D	
2	XX Coil A/B/C/E	XYX Coil A/B/C/E		
3	XXX Coil A/B/C/E			

X = Form X (NO-DM) Y = Form Y (NC-DB)

Coil Operating Voltage (valid over temperature range)

Coil Designator	Units	A	B	C	D
Nominal Voltage	V	12 (DC)	24 (DC)	115 (AC)	24 (DC)
Voltage Range	V	9.6-13.2	19.2-26.4	92-126.5	19.2-26.4
Hold Voltage	V	$\geq 0.5V_{nom}$	$\geq 0.5V_{nom}$	$\geq 0.5V_{nom}$	$\geq 0.5V_{nom}$
Dropout Voltage	V	$\leq 0.1V_{nom}$	$\leq 0.1V_{nom}$	$\leq 0.1V_{nom}$	$\leq 0.2V_{nom}$

Coil Resistance Data for Pole Configurations (@25°C)

Coil Designator	Units	A	B*	C*	D*
Resistance ±10%	Ohms	X = 36 XX = 18 XXX = 12 XY = 13.2 XYX = 9.6	X = 36 XX = 18 XXX = 12 XY = 13.2 XYX = 9.6	X = 36 XX = 18 XXX = 12 XY = 13.2 XYX = 9.6	Y = 20.8 YY = 10.4 YYY = 6.9 YXY = 8.1

*Coil resistance not measurable at terminals due to converter/economizer circuit.

Coil Current/Power Data for Pole Configurations (@25°C, V_{coil}=1.1V_{nom})

Coil Designator	A	B**
Current/Power	X = 0.37 ADC / 4.84W XX = 0.73ADC / 9.68W XXX = 1.1ADC / 14.5W XY = 1.0ADC / 13.2W XYX = 1.38ADC / 18.2W	X = 0.33ADC / 3.9W XX = 0.65ADC / 7.6W XXX = 0.97ADC / 11.3W XY = 0.98ADC / 12.7W XYX = 1.31ADC / 16.5W

Coil Designator	C	D***	Pick-Up I / Duration
Current/Power	X = 0.067 Arms / 6.8VA XX = 0.115Arms / 11.6VA XXX = 0.146Arms / 14.8VA XY = 0.074Arms / 7.5VA XYX = 0.161Arms / 16.3VA	Y = 0.13ADC / 3.4W YY = 0.23ADC / 6.1W YYY = 0.34ADC / 9.0W YXY = 0.28ADC / 7.4W	1.28ADC / 75ms 2.4ADC / 75ms 3.0ADC / 75ms 3.0ADC / 75ms

**Average coil current. ***Economized.

Operate/Release Time (25°C, 0.8V_{nom} ≤ V < V_{nom}) Typ.

Coil Designator	Units	A	B****	C****	D****
Operate Time	ms	25-50	30-50	50-150	20-30
Release Time	ms	10-20	70-80	75-100	75-100
Bounce Time	ms	2-5	2-5	2-5	2-5

****Includes internal coil suppression.

Catalog 5-1773450-5
Revised 3-13

www.te.com

Dimensions are shown for reference purposes only. Specifications subject to change.

Dimensions are in millimeters unless otherwise specified.

USA: +1 800 522 6752
Asia Pacific: +86 0 400 820 6015
UK: +44 800 267 666

For additional support numbers please visit www.te.com

FM200 "Flatman III" Series Contactor (Continued)

Part Numbering System

Typical Part Number	FM200	A	B	XYX

Series:
FM200 = Multipole, 200 Amp, 480VAC/48VDC Contactor

Control Voltage:
A = 12VDC Coil, No Suppression
B = 24VDC Converter, with Suppression
C = 115VAC Converter, with Suppression
D = 24VDC Electronic Chopper, with Suppression
E = 240VAC Converter, with Suppression - Consult Factory for Availability and Specifications

Optional Termination:
A = Optional Quick Connect Tabs
B = No Optional Terminals

Pole Configuration (All models have a 1 Form A (SPST-NO) auxiliary switch):
X = 1 Form X (SPST-NO-DM), Available with control voltage codes A, B, C and E
XX = 2 Form X (2PST-NO-DM), Available with control voltage codes A, B, C and E
XXX = 3 Form X (3PST-NO-DM), Available with control voltage codes A, B, C and E
Y = 1 Form Y (SPST-NC-DB), Available only with control voltage code D
YY = 2 Form Y (DPST-NC-DB), Available only with control voltage code D
YYY = 3 Form Y (3PST-NC-DB), Available only with control voltage code D
XY = 1 Form X (SPST-NO-DM) + 1 Form Y (SPST-NC-DB), Available with control voltage codes A, B, C and E
XYX = 1 Form X (SPST-NO-DM) + 1 Form Y (SPST-NC-DB) + 1 Form X (SPST-NO-DM), Available with control voltage codes A, B, C and E
YXY = 1 Form Y (SPST-NC-DB) + 1 Form X (SPST-NO-DM) + 1 Form Y (SPST-NC-DB), Available only with control voltage code D

Outline Dimensions

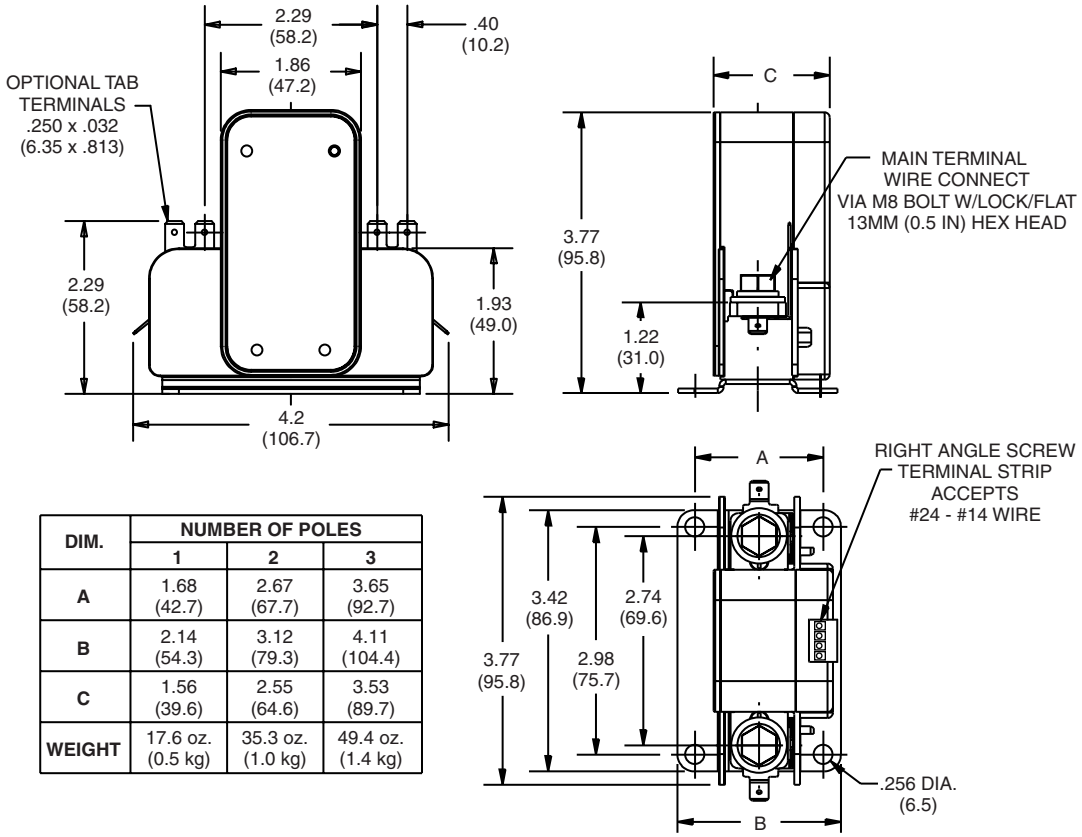

DIM.	NUMBER OF POLES		
	1	2	3
A	1.68 (42.7)	2.67 (67.7)	3.65 (92.7)
B	2.14 (54.3)	3.12 (79.3)	4.11 (104.4)
C	1.56 (39.6)	2.55 (64.6)	3.53 (89.7)
WEIGHT	17.6 oz. (0.5 kg)	35.3 oz. (1.0 kg)	49.4 oz. (1.4 kg)

For factory-direct application assistance, dial 800-253-4560, ext. 2055, or 805-220-2055.

Catalog 5-1773450-5
Revised 3-13

www.te.com

Dimensions are shown for reference purposes only. Specifications subject to change.

Dimensions are in millimeters unless otherwise specified.

USA: +1 800 522 6752
Asia Pacific: +86 0 400 820 6015
UK: +44 800 267 666

For additional support numbers please visit www.te.com

AC30 Series Contactor, 60 Amps, 600 VAC (50/60 Hz), 3 Form A (3PST-NO)

Product Facts

- **Designed to be the smallest, lowest cost contactor in the industry with its current rating**
- **Built-in coil economizer – only 1.7W hold power @ 12VDC and limits back EMF to zero volts**
- **Hermetically sealed – intrinsically safe, operates in explosive & harsh environments with no oxidation or contamination of coils or contacts, including long periods of non-operation.**

Submitted for UL and CE evaluation

For factory-direct application assistance, dial 800-253-4560, ext. 2055, or 805-220-2055.

Performance Data

Parameter	Units	Value for AC30 Series
Contact Arrangement		3 poles
Contact Form (per pole)		Form A (NO)
Rated Operating Voltage	V	600Vrms (L-L)
Max. Contact Voltage (transient)	V	600Vrms (L-N)
Continuous (Carry) Current	Arms	60/pole
Power Switching (0.7-1.0 PF)	Cycles	50 @ 60Arms 500 @ 10Arms 500 @ 30Arms 10,000 @ 10Arms 50,000 @ 5Arms
Mechanical Life	Cycles	1 million
Contact Voltage Drop (Max., Per Pole)	mV	120 @ 60Arms
Dielectric Withstanding Voltage	Vrms	2,200 @ sea level
Insulation Resistance @ 500VDC	Megohms	100
Shock, 11ms 1/2 sine, peak, operating	G	20
Vibration, sine, 80-2000Hz.	G	20
Operating Temperature	°C	-40 to +85
Storage Temperature	°C	-55 to +125
Ambient Humidity	%RH	0 to 95
Weight	lb.(kg)	.83 (.38)

Operate/Release Time (25°C)		
Operate Time (Includes bounce)	ms	16 nominal / 35 maximum
Bounce Time (After Operate)	ms	4 nominal / 11 maximum
Release Time (includes arcing)	ms	5 nominal / 8 maximum

Coil Operating Voltage (valid over temperature range)			
Voltage (will operate)	9-36VDC	32-95VDC	48-95VDC
Voltage (Max.)	36VDC	95VDC	95VDC
Pickup (close) Voltage Max.	9VDC	32VDC	48VDC
Hold Voltage (Min.)	7VDC	21VDC	33VDC
Dropout (open) Voltage (Min.)	6VDC	18VDC	27VDC
Inrush Current (Max.)	3.8A	1.3A	0.7A
Holding Current (Avg.)	0.13A@12V, 0.07A@24V	0.03A@48V	0.02A@72V
Inrush Time (Max.)	130ms	130ms	130ms

Part Numbering System

Typical Part Number AC30 A A A N A

Series:
AC30 = Multipole, 60 Amp, 600VAC, 3-pole Contactor

Contact Form:
A = Normally Open

Coil Voltage:
A = 9-36VDC
B = 32-95VDC
J = 48-95VDC

Coil Wire Length:
A = 15.3 in (390 mm)

Coil Terminal Connector:
N = None

Mounting & Power Terminals:
A = Bottom Mount & #10-32 Pan Head Screws

Outline Dimensions

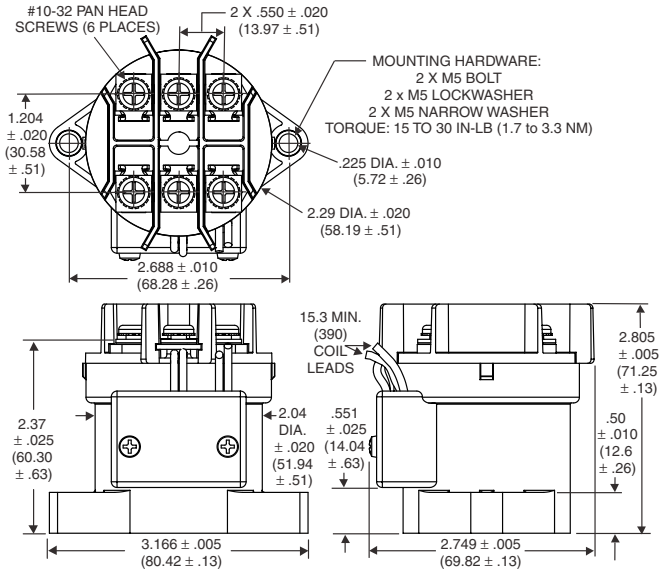

Catalog 5-1773450-5
Revised 3-13

www.te.com

Dimensions are shown for reference purposes only. Specifications subject to change.

Dimensions are in millimeters unless otherwise specified.

USA: +1 800 522 6752
Asia Pacific: +86 0 400 820 6015
UK: +44 800 267 666

For additional support numbers please visit www.te.com

AP90X-05 - 90 Amps SPUD Contactor

Product Facts

- 90 A carry, 350 A overload @ 270 Vdc
- Same size and weight as AP50X
- Versatile power, voltage, and current operating range
- Ideal for circuit protection and control
- Bi-directional switching
- Fast operate and release time
- Low power consumption
- Vacuum-sealed contacts; can operate in harsh environments
- Space-rated version built in accordance with customers SCD
- Meets many requirements of MIL-PRF-32085

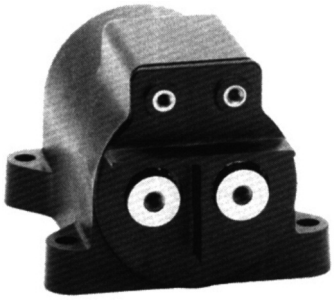

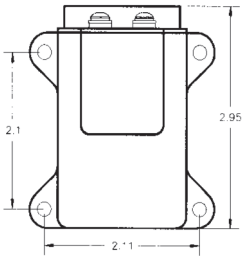

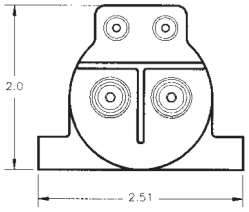

Contact Ratings*

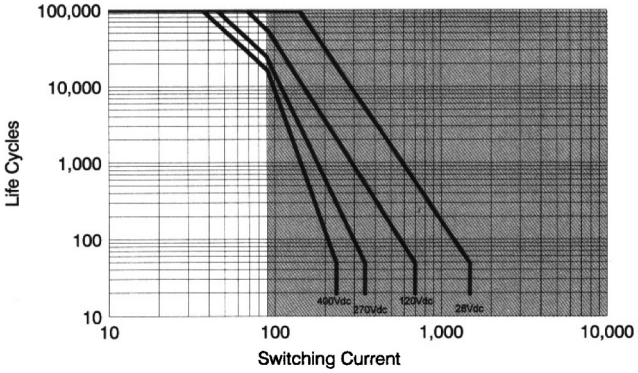

Maximum continuous current carry = 90 Amps

*Based on data extrapolated from qualification at 270 Vdc with resistive load. Since each application is unique, user is encouraged to verify rating in actual application.

Product Specifications

Contact Arrangement — SPST-NO

Contact Form — X

Rated Resistive Load @ 270 Vdc — 90 A

Continuous Current Carry, Max. — 65 A

Overload @ 270 Vdc — 350 A

Contact Resistance, Max. — 2 mohm

Dielectric at Sea Level — Coil to Power Terminals — 1,800 Vrms
All Other Points — 2,000 Vrms

Shock, 11ms, 1/2 Sine (Peak) — 30 g

Vibration, Sinusoidal (55-2000 Hz, Peak) — 20 g

Operating Ambient Temperature Range — -55°C to +90°C

Load Life @ 270 Vdc, Min. — 25,000 cycles

Operate Time, Excluding Bounce, Max. — 35 ms

Release Time, Max. — 10 ms

Bounce Time, Max. — 8 ms

Insulation Resistance @ 500 Vdc, Min. — Initial — 100 mohm
End of Life — 50 mohm

Weight, Nominal — 454 gram (16 oz.)

Coil Data

Volts, Nominal	12	28	120
Pickup, Max.	9.9 Vdc	23 Vdc	99 Vdc
Dropout, Min.	.4 Vdc	1.0 Vdc	4.0 Vdc
Coil Resistance (±10%)	19 Ω	103 Ω	1890 Ω
Energy, Magnetic, Max.	.05 J	.05 J	.05 J

Coil resistance rated at 25°C

For factory-direct application assistance, dial 800-253-4560, ext. 2055, or 805-220-2055.

Catalog 5-1773450-5
Revised 3-13

www.te.com

Dimensions are shown for reference purposes only. Specifications subject to change.

Dimensions are in millimeters unless otherwise specified.

USA: +1 800 522 6752
Asia Pacific: +86 0 400 820 6015
UK: +44 800 267 666

For additional support numbers please visit www.te.com

AP90X - 90 Amps SPUD Contactor

Product Facts

- **90 A carry, 350 A overload @ 270 Vdc**
- **Same size and weight as AP50X**
- **Versatile power, voltage, and current operating range**
- **Ideal for circuit protection and control**
- **Bi-directional switching**
- **Fast operate and release time**
- **Low power consumption**
- **Vacuum-sealed contacts; can operate in harsh environments**
- **Space-rated version built in accordance with customers SCD**
- **Meets many requirements of MIL-PRF-32085**

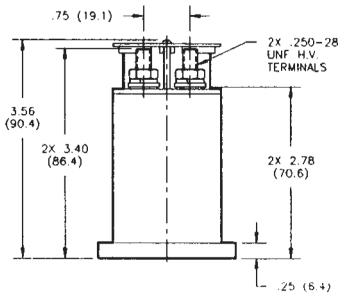

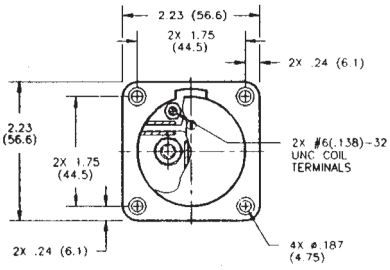

Contact Ratings*

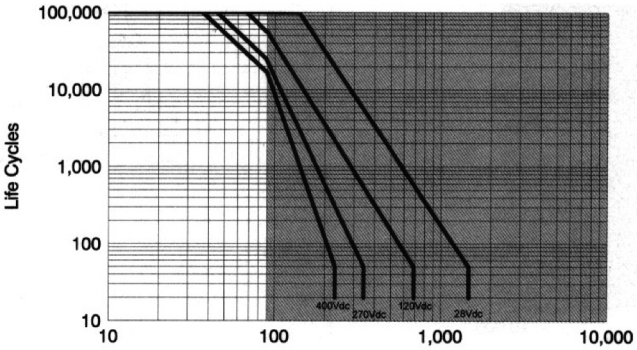

Switching Current

Maximum continuous current carry = 90 Amps

*Based on data extrapolated from qualification at 270 Vdc with resistive load. Since each application is unique, user is encouraged to verify rating in actual application.

Product Specifications

Contact Arrangement — SPST-NO

Contact Form — X

Rated Resistive Load @ 270 Vdc — 90 A

Continuous Current Carry, Max. — 90 A

Overload @ 270 Vdc — 350 A

Contact Resistance, Max. — 2 mohm

Dielectric at Sea Level —
Coil to Power Terminals — 1,800 Vrms
All Other Points — 2,000 Vrms

Shock, 11ms, 1/2 Sine (Peak) — 30 g

Vibration, Sinusoidal (55-2000 Hz, Peak) — 20 g

Operating Ambient Temperature Range — -55°C to +85°C

Load Life @ 270 Vdc, Min. — 25,000 cycles

Operate Time, Excluding Bounce, Max. — 27 ms

Release Time, Max. — 10 ms

Bounce Time, Max. — 8 ms

Insulation Resistance @ 500 Vdc, Min. —
Initial — 100 mohm
End of Life — 50 mohm

Weight, Nominal — 454 gram (16 oz.)

Coil Data

Volts, Nominal	12	28	120
Pickup, Max.	9.9 Vdc	23 Vdc	99 Vdc
Dropout, Min.	.4 Vdc	1.0 Vdc	4.0 Vdc
Coil Resistance (±10%)	19 Ω	103 Ω	1890 Ω
Energy, Magnetic, Max.	.05 J	.05 J	.05 J

Coil resistance rated at 25°C

Ordering Information

Sample Part Number ▶ **AP90 X B 5 7**

Series:

Contact Form:
X = SPST-NO Double Make

Coil Voltage:
A = 12 Vdc, Stud Terminals
B = 28 Vdc, Stud Terminals
C = 120 Vdc, Stud Terminals

Power Terminals:
5 = Stud Terminals

Mounting:
7 = Panel Mount

For factory-direct application assistance, dial 800-253-4560, ext. 2055, or 805-220-2055.

Catalog 5-1773450-5
Revised 3-13

www.te.com

Dimensions are shown for reference purposes only. Specifications subject to change.

Dimensions are in millimeters unless otherwise specified.

USA: +1 800 522 6752
Asia Pacific: +86 0 400 820 6015
UK: +44 800 267 666

For additional support numbers please visit www.te.com

AP150X (Form X, Electrically Held)

CZONKA Contactor

Product Facts

- **150 A carry, 500 A overload @ 270 Vdc**
- **Suitable for circuit protection, control, and battery switching**
- **Versatile power, voltage, and current operating range**
- **Bi-directional switching**
- **Electrically held and latching coil versions**
- **Fast operate and release time**
- **Low power consumption**
- **Vacuum-sealed contacts; can operate in harsh environments**
- **Space-rated version built in accordance with customers SCD**
- **Meets many requirements of MIL-PRF-32085**

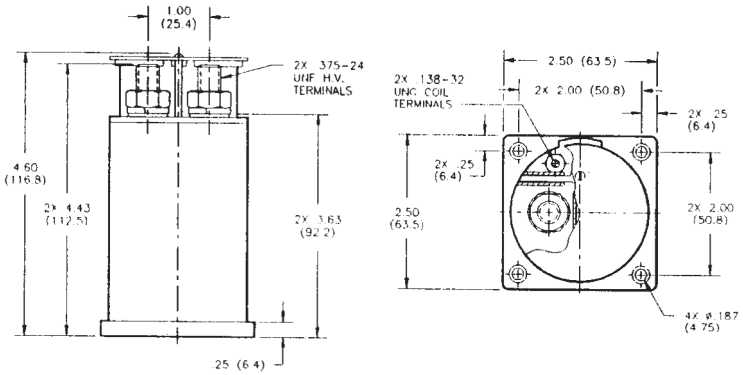

Product Specifications

Contact Arrangement — AP150X — SPST-NO

Contact Form — AP150X — X

Rated Resistive Load @ 270 Vdc — 150 A

Continuous Current Carry, Max. — 150 A

Overload Make & Break @ 270 Vdc — 400/500 A*

Contact Resistance, Max. — 1 mohm

Dielectric at Sea Level — Power Terminals to Terminal — 2,000 Vrms
Power Terminals to All Other Points — 1,800 Vrms

Shock, 11ms, 1/2 Sine (Peak) — 35 g

Vibration, Sinusoidal (55-2000 Hz, Peak) — 20 g

Operating Ambient Temperature Range — -55°C to +85°C

Load Life @ 270 Vdc, Min. — 10,000 cycles

Operate Time (28 Vdc, 25°C) —

Close (Includes Bounce), Typ. — AP150X — 35 ms

Bounce (After Close Only), Max. — AP150X — 8 ms

Open (Includes Arcing), Max. — AP150X — 10 ms

Insulation Resistance @ 500 Vdc, Min. — Initial/End of Life — 100 mohm/50 mohm

Weight, Nominal — 1.66 lb (0.753 kg)

Note:
*500 = at beginning of life which is 0 to 5,000 cycles, 400 = at end of life which is 5,000 to 10,000 cycles.

Contact Ratings*

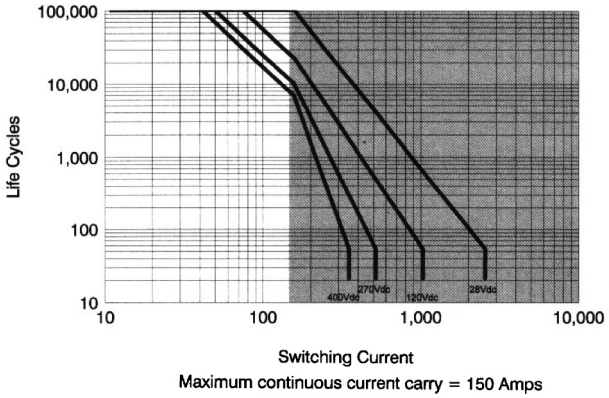

*Based on data extrapolated from qualification at 270 Vdc with resistive load. Since each application is unique, user is encouraged to verify rating in actual application.

Coil Data

	AP150X	AP150P
Voltage, Nominal*	28 Vdc	28 Vdc
Pickup (Close), Max.	23 Vdc	20 Vdc
Dropout (Open), Max.	1.0 Vdc	20 Vdc
Coil Resistance @ 25°C (10%)	52 Ω	13 Ω**
Coil Duty, Recommended	Continuous	100 ms to Toggle
Coil Energy, Max.	0.10 J	0.10 J
Coil Clamping	2.5 x nom.	500W/ms TVS

*12, 120 Vdc, or other special coil voltages available upon request.
**2 coils are used, both are high common. Switch coil power from low side. High side coil power switch is a special order.

Ordering Information

Sample Part Number ▶ **AP150 X B 5 7**

Series:

Contact Form:
X = SPST-NO Electrically Held

Coil Voltage:
A = 12 Vdc, Stud Terminals, .138-32
B = 28 Vdc, Stud Terminals, .138-32
C = 120 Vdc, Stud Terminals, .138-32

Power Terminals:
5 = Stud Terminals, .375-24

Mounting:
7 = Panel Mount

For factory-direct application assistance, dial 800-253-4560, ext. 2055, or 805-220-2055.

Catalog 5-1773450-5
Revised 3-13

www.te.com

Dimensions are shown for reference purposes only. Specifications subject to change.

Dimensions are in millimeters unless otherwise specified.

USA: +1 800 522 6752
Asia Pacific: +86 0 400 820 6015
UK: +44 800 267 666

For additional support numbers please visit www.te.com

AP265 (Form X, Electrically Held) & AP265P (Form P, Latching) 265 Amps

CZONKA II Contactor

Product Facts

- **265 A carry, 1000 A overload @ 270 Vdc**
- **Bi-directional power switching**
- **Auxiliary Contacts**
- **Electrically held and latching coil versions**
- **Built-in coil drivers for electrically held (5W hold) and latching (coil pulser)**
- **Coil divers EMC qualified to most of the requirements of MIL-STD-461D**
- **Versatile power, voltage, and current operating range**
- **Excellent for safety disconnect and transfer switch applications**
- **Designed for main generator loads**
- **Suitable for circuit protection and control**
- **Remote Power Controller version with overload protection available — contact factory for more information**
- **Hermetically-sealed contacts; can operate in harsh environments**
- **Space-rated version built in accordance with customers SCD**
- **Meets many requirements of MIL-PRF-32085**

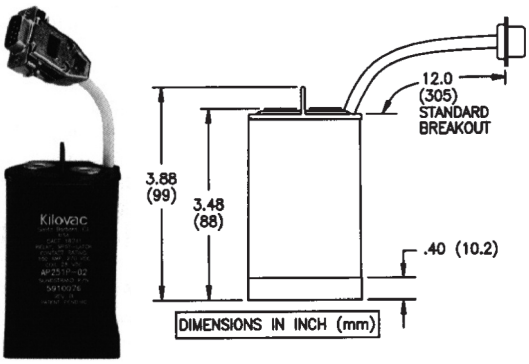

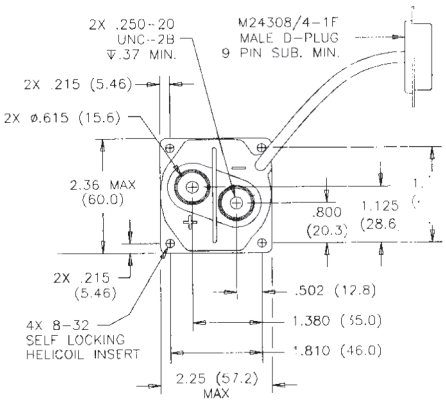

Product Specifications

Contact Arrangement Mains —
AP265X — Form X — SPST-NO
Form A — 2 x SPST-NO
AP265P — Form X — SPST
Form A — 2 x SPST

Polarity (Carry and Switching) — Bi-directional

Rated Resistive Load @ 270 Vdc — 265 A

Continuous Current Carry, Max. — 265 A

Overload Current @ 270 Vdc, Max. —
Make and Break — 600 A
Break Only — 1000 A

Contact Resistance, Max. — 0.3 mohm

Dielectric at Sea Level (< 1 mA leakage) —
Power Terminals to Terminal — 1,000 Vrms
Power Terminals to All Other Points — 1,000 Vrms

Shock, 11ms, 1/2 Sine (Peak) — 25 g

Vibration, Sinusoidal (55-2000 Hz, Peak) — 10 g

Operating Ambient Temperature Range — -55°C to +85°C

Load Life @ 270 Vdc, Min. — See graph above

Operate Time (28 Vdc, 25°C) —

Close (Includes Bounce), Typ. —
AP265X — 20 ms
AP265P — 10 ms

Bounce (After Close Only), Max. — 5 ms

Open (Includes Arcing), Max. — 15 ms

Insulation Resistance @ 500 Vdc, Min. —
Initial/End of Life — 100 mohm/50 mohm

Weight, Nominal — 1.7 lb (0.77 kg)

Electrical Life Cycles vs Power Switching

(Data from 270 Vdc testing @ 265A, 95% Weibull Reliability)

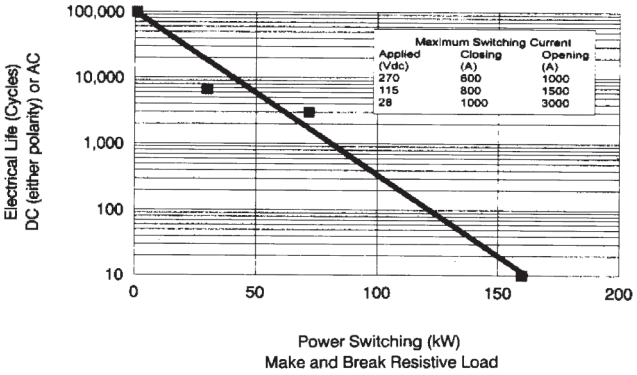

Coil Data

	AP265X	AP265P
Type Driver	"PWM" Econ.	Pulser
Voltage, Nominal	28 Vdc	28 Vdc
Pickup (Close), Max.	20 Vdc	12 Vdc
Dropout (Open), Max.	11 Vdc	12 Vdc
Current @ 28 V, 25°C		
Inrush	1.8 A	2.6 A
Holding (Standby)	0.20 A	<0.05 A
Inrush Time, Max.	100 ms	100 ms

Ordering Information

Sample Part Number ▶ **AP265 X E 9 7**

Series:

Contact Form:
X = SPST-NO, Electrically Held
P = SPST, Latching

Coil Voltage:
E = 28 Vdc

Power Terminals:
9 = Female Threads, .250-20

Mounting:
7 = Panel Mount, Helcoil Locking

For factory-direct application assistance, dial 800-253-4560, ext. 2055, or 805-220-2055.

Catalog 5-1773450-5
Revised 3-13

www.te.com

Dimensions are shown for reference purposes only. Specifications subject to change.

Dimensions are in millimeters unless otherwise specified.

USA: +1 800 522 6752
Asia Pacific: +86 0 400 820 6015
UK: +44 800 267 666

For additional support numbers please visit www.te.com

AP350X "BUBBA" Contactor 500 Amps

Product Facts

- **500 A carry, 1200 A make, 3000 A break @ 270 Vdc**
- **Bi-directional power switching**
- **Auxiliary Contacts**
- **Built-in coil power economizing — 6 W holding**
- **Versatile power, voltage, and current operating range**
- **Excellent for safety disconnect and transfer switch applications**
- **Suited for circuit protection control**
- **Hermetically-sealed contacts; can operate in harsh environments**
- **Designed for main generator loads**
- **Space-rated version built in accordance with customers SCD**
- **Meets many requirements of MIL-PRF-32085**

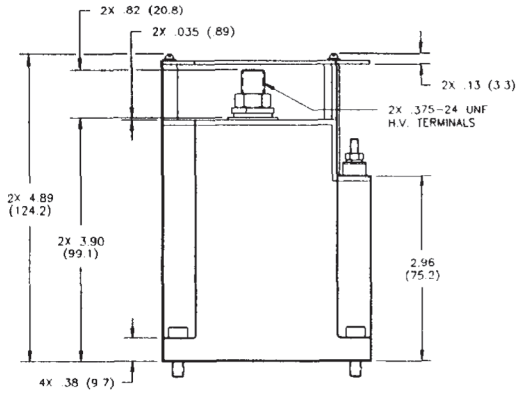

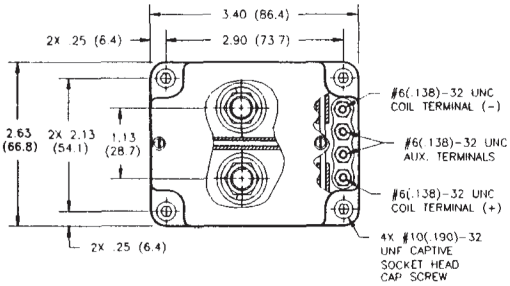

Product Specifications

Contact Arrangement with Auxiliary Contact (28 Vdc, 0.1 A) —
Form X — SPST-NO
Form A — SPST-NO

Rated Resistive Load @ 270 Vdc, 85°C — 350 A

Continuous Current Carry, Max., 25°C — 500 A

Overload Current @ 270 Vdc, Max. —
Make (Closed Into) — 1200 A
Break (Open) — 3000 A

Contact Resistance, Max. —
0.2 mohm

Dielectric at Sea Level (< 1mA leakage) —
Open Power Terminal to Terminal — 2,000 Vrms
Closed Power Terminals to All Other Points — 2,000 Vrms

Shock, 11ms, 1/2 Sine (Peak) — 25 g

Vibration, Sinusoidal (55-2000 Hz, Peak) — 10 g

Operating Ambient Temperature Range — -55°C to +85°C

Load Life @ 270 Vdc, Min. —
See graph above

Operate Time @ 25°C —

Close (Includes Bounce), Typ. —
35 ms

Bounce (Occurs When Closing), Max. — 5 ms

Open (Includes Arcing), Max. —
20 ms

Insulation Resistance @ 500 Vdc, Min. —
Initial/End of Life — 100 mohm/50 mohm

Weight, Nominal —
3.35 lb (1.52 kg)

Electrical Life Cycles vs Power Switching

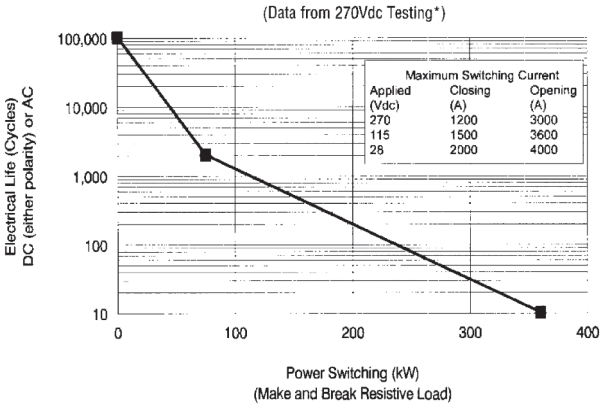

*Failure mode: Dielectric withstand voltage test @ 2000 Vdc, power terminal to terminal, leakage exceeds 1.0 A. Current Carry: 500 A @ 25°C. Derate 2.5 A/°C to 350 A @ 85°C for still air, no heat sink, AWG# 00 conductor.

Coil Data

	AP350X
Type Driver	"PWM" Econ.
Voltage, Nominal	28 Vdc
Pickup (Close), Max.	20 Vdc
Dropout (Open), Max.	11 Vdc
Current @ 28 V, 25°C	
Inrush	2.1 A
Holding (Standby)	0.21 A
Inrush Time, Max.	200 ms

For factory-direct application assistance, dial 800-253-4560, ext. 2055, or 805-220-2055.

Ordering Information

Sample Part Number ▶ **AP350 X B 5 7**

Series:

Contact Form:
X = SPST-NO Double Make

Coil Voltage:
B = 28 Vdc, Stud Terminals

Power Terminals:
5 = Screw Terminals

Mounting:
7 = Panel Mount, captive bolts

Refer to EV500 Sales Drawing for complete specifications.

Catalog 5-1773450-5
Revised 3-13

www.te.com

Dimensions are shown for reference purposes only. Specifications subject to change.

Dimensions are in millimeters unless otherwise specified.

USA: +1 800 522 6752
Asia Pacific: +86 0 400 820 6015
UK: +44 800 267 666

For additional support numbers please visit www.te.com

EV250-1A & 1B 400 Amps CZONKA-II EVX Make & Break Load Switching

Product Facts

- **Hydrogen dielectric for power switching high current loads**
- **400 A carry, 2,500 A interrupt @ 320 Vdc**
- **Suited for circuit protection, control, battery switching, and main power safety disconnect**
- **Versatile power, voltage, and current operating range: 28-1800 Vdc tested**
- **Low-cost compact version for volume production applications. Requires external coil economizer (PWM or lower hold voltage)**
- **"Hammer effect" mechanism breaks light contact welds**
- **"Super-sealed" environment chamber uniquely protects ALL moving parts**
- **Can operate in harsh environments**
- **Moving contact rotates to provide fresh contact surface for low contact resistance and low power consumption**
- **Sealed control connector. Mating connector with flying leads Part Number 2005 available, see page 7-95**
- **Logic control enabled by external economizer Part Number 9913**
- **High temperature (135°C) model with 10 inch flying leads available (-4A — Call TE for sales drawing)**
- **Bi-directional power switching**
- **Fast operate and release time**

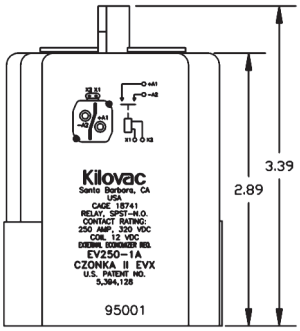

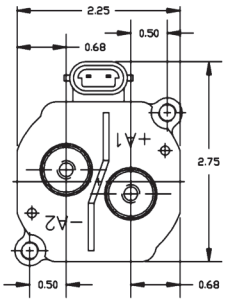

Note: Dimensions in inches. Multiply values by 25.4 for dimensions in mm.

Product Specifications

Contact Arrangement — SPST-NO

Contact Form — X

Continuous Current Carry, Max. — 400 A; 6.5 Minutes — 500 A

Break Current @ 320 Vdc — 2,500 A

Contact Resistance, Max. — 0.0003 ohm

Contact Resistance, Typ. — 0.0001 – 0.0002 ohm

Dielectric at Sea Level (Leakage < 1mA) — 2,200 Vrms

Shock, 11ms, 1/2 Sine (Peak), Operating — 30 g

Vibration, Sinusoidal (80-2000 Hz, Peak) — 20 g

Operating Ambient Temperature Range — -40°C to +85°C

Load Life — See chart on next page

Operate Time, @ 25°C —

Close (Includes Bounce), Typ. — 30 ms

Bounce (After Close Only), Max. — 5 ms

Open (Includes Arcing), Max. — 15 ms

Insulation Resistance @ 500 Vdc, Min. — 100 mohm

Weight, Nominal — 1.54 lb (0.7 kg)

Contact Ratings*

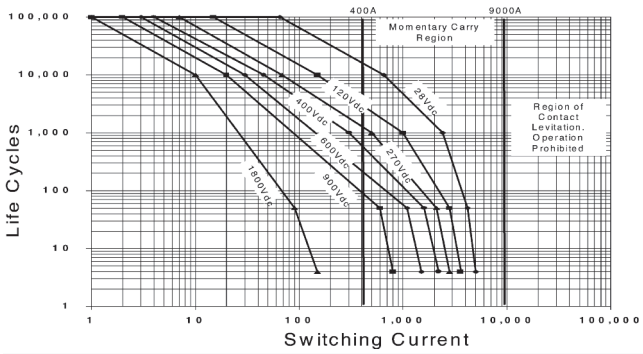

*For circuit conditions and actual data refer to the EV250 hot switch study. Since each application is unique, user is encouraged to verify rating in actual application.

Coil Data***

	EV250-1A	EV250-1B
Voltage, Nominal*	12 Vdc	24 Vdc
Pickup (Close), Max.	8.3 Vdc	16.6 Vdc
Continuous Hold, Max./Min.**	5.1/3.8 Vdc	10.2/7.6 Vdc
Dropout (Open), Min.	0.88 - 3.3 Vdc	2.4 - 6.6 Vdc
Coil Resistance @ 25°C, ±10%	3 Ω	12 Ω
Coil Energy, Max.	0.2 J	0.2 J
Coil Clamping	3 x nom.	3 x nom.

*Do not apply continuously. Requires external coil economizer. Other special coil voltages available upon request.

**At maximum continuous current and maximum ambient temperature. Hold voltage must be maintained within the limits specified to keep contacts closed and to prevent coil overheating.

***Do not use a free wheeling diode or capacitor across the coil.

Ordering Information

Sample Part Number ▶ **EV250-1 A**

Series:

Coil Voltage:
A = 12 Vdc, Nominal
B = 24 Vdc, Nominal

For factory-direct application assistance, dial 800-253-4560, ext. 2055, or 805-220-2055.

For detailed specifications and recommendations, refer to the EV250-1A & B sales drawings.

Catalog 5-1773450-5
Revised 3-13

www.te.com

Dimensions are shown for reference purposes only. Specifications subject to change.

Dimensions are in millimeters unless otherwise specified.

USA: +1 800 522 6752
Asia Pacific: +86 0 400 820 6015
UK: +44 800 267 666

For additional support numbers please visit www.te.com

EV250-1A & 1B 400 Amps CZONKA-II EVX Make & Break Load Switching (Continued)

Current vs Time

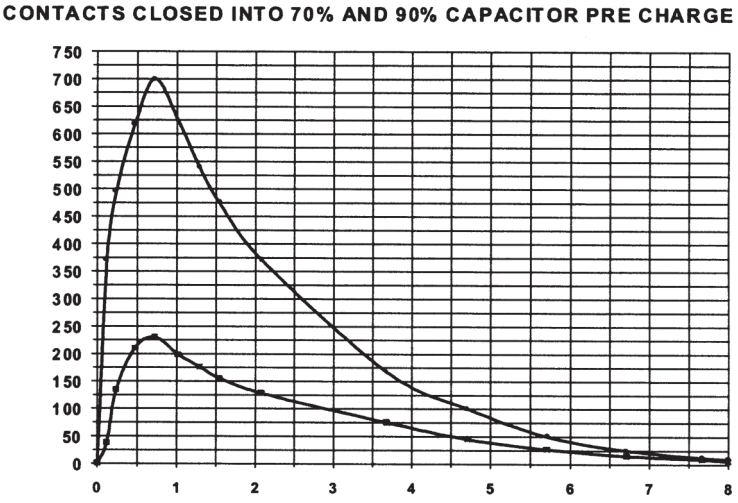

Life Ratings and Qualification Test Plan

	Normal Operations	Abnormal Operations		
Test #	**1**	**2**	**3**	**4**
Current	Reference Graph and Test Circuit Diagram (Sht. 8)		-250 A	2500 A
Voltage			320 V	320 V
Load Type	Capacitive	Capacitive	Resistive	Resistive
% Pre Charge	90%	70%	NA	N/A
Switch Mode	Make Only	Make Only	Make/Break	Break Only
Sequence				
1	10K cycles	10 cycles	2	2
2	10K	10	2	—
3	10K	10	2	—
4	10K	10	2	2
5	10K	10	2	—
Etc.	Continue Cycling to Relay Failure			

The testing objective is to verify proper relay function for a given number of consecutive and cumulative cycles under both normal and abnormal conditions in a variety of load switching applications. The life rating of 40K cycles minimum was calculated with 95% Weibull reliability.

Electrical Data (Over Temperature Range — Max. Terminal Temp. = 200°C)

Make/Break Life for Capacitive & Resistive Loads at 320 Vdc [1,2] —
@ 90% Capacitive Pre-Charge — 50,000 cycles
@ 70% Capacitive Pre-Charge — 50 cycles
@ -250 A (2 Consecutive, Reverse Polarity) [1] — 10 cycles
@ 3300 A (Break only, 2 Consecutive) [1] — 4 cycles

Mechanical Life — 100,000 cycles

Notes:
1 Resistive load includes inductance L = 25 µH. Load @ 2500 A tested @ 200 µH.
2 Conductor: 2 each of copper 54 mm² (AWG 0) required for > 250 A carry. 1 Copper (AWG 0) conductor recommended for ≤ 250 A

For factory-direct application assistance, dial 800-253-4560, ext. 2055, or 805-220-2055.

EV250-2A & 2B 400 Amps CZONKA II EVX Make & Break Load Switching

Product Facts

- **Hydrogen dielectric for power switching high current loads**
- **400 A carry, 2,500 A interrupt @ 320 Vdc**
- **Suited for circuit protection, control, battery switching, and main power safety disconnect**
- **Versatile power, voltage, and current operating range: 28-1800 Vdc tested**
- **Internal coil economizer provides:**
  - **4W typical hold power independent of temperature & voltage range**
  - **EMI spectrum tested and approved**
  - **Built-in coil suppression**
- **"Hammer effect" mechanism breaks light contact welds**
- **Hermetically "Super-sealed" environment chamber uniquely protects ALL moving parts**
- **Can operate in harsh environments**
- **Moving contact rotates to provide fresh contact surface for low contact resistance and low power consumption**
- **Sealed control connector. Mating connector with flying leads Part Number 2005 available**
- **Special versions available:**
  - **Economical (-8A/B) for light duty power switching (without arc blowout magnets)**
  - **10 inch flying leads model (-7A)**

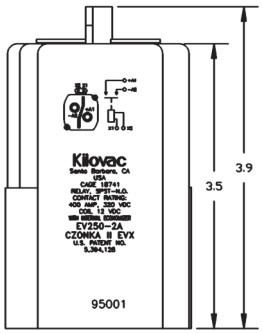

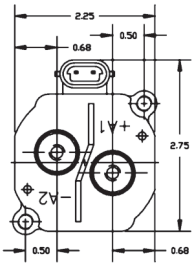

Note: Dimensions in inches. Multiply values by 25.4 for dimensions in mm.

Product Specifications

Contact Arrangement — SPST-NO

Contact Form — X

Continuous Current Carry, Max. — 400 A; 6.5 Minutes — 500 A

Break Current @ 320 Vdc — 2,500 A

Contact Resistance, Max. — 0.0003 ohm

Contact Resistance, Typ. — 0.0001 – 0.0002 ohm

Dielectric at Sea Level (Leakage < 1mA) — 2,200 Vrms

Shock, 11ms, 1/2 Sine (Peak), Operating — 30 g

Vibration, Sinusoidal (80-2000 Hz, Peak) — 20 g

Operating Ambient Temperature Range — -40°C to +85°C

Load Life — See chart on next page

Operate Time, @ 25°C —

Close (Includes Bounce), Typ. — 18 ms

Bounce (After Close Only), Max. — 5 ms

Release Time (Includes Arcing), Max. — 15 ms

Insulation Resistance @ 500 Vdc, Min. — 100 mohm

Weight, Nominal — 1.76 lb (0.8 kg)

Contact Ratings*

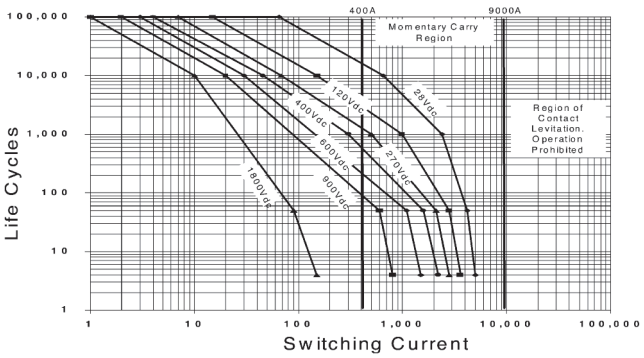

*For circuit conditions and actual data refer to the EV250 hot switch study. Since each application is unique, user is encouraged to verify rating in actual application.

Coil Data**

	EV250-2A	EV250-2B
Voltage, Nominal*	12 Vdc	24 Vdc
Pickup (Close), Max.	9 Vdc	18 Vdc
Hold, Min.	7 Vdc	14 Vdc
Dropout (Open), Min.	5 Vdc	10 Vdc
Current (@ VsNom / 25°C)		
Inrush	2.8 A	1.8 A
Holding, Standby	0.34 A	0.11 A
Inrush Time, Max.	200 ms	200 ms

*Other special coil voltages available upon request.
**Do not use a free wheeling diode or capacitor across the coil. Built in suppression limits back EMF to zero volts.

Ordering Information

Sample Part Number ▶ **EV250 -2 A**

Series:

Model:
2 = With Blowout Magnets
8 = Without Blowout Magnets
7 = 10" Flying Leads (12 V, with Magnets Only)

Coil Voltage:
A = 12 Vdc, Nominal
B = 24 Vdc, Nominal

For detailed specifications and recommendations, refer to the EV250-2A & B or 7A sales drawings.

For factory-direct application assistance, dial 800-253-4560, ext. 2055, or 805-220-2055.

Catalog 5-1773450-5
Revised 3-13

www.te.com

Dimensions are shown for reference purposes only. Specifications subject to change.

Dimensions are in millimeters unless otherwise specified.

USA: +1 800 522 6752
Asia Pacific: +86 0 400 820 6015
UK: +44 800 267 666

For additional support numbers please visit www.te.com

EV250-2A & 2B 400 Amps CZONKA II EVX Make & Break Load Switching (Continued)

CONTACTS CLOSED INTO 70% AND 90% CAPACITOR PRE CHARGE

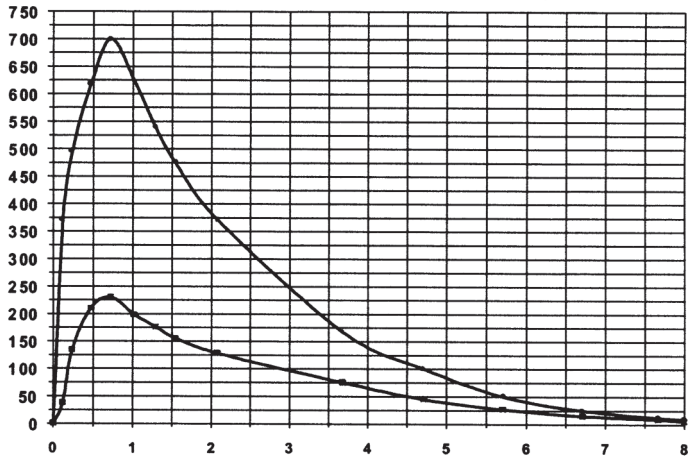

Life Ratings and Qualification Test Plan

	Normal Operations	Abnormal Operations		
Test #	**1**	**2**	**3**	**4**
Current	Reference Graph and Test Circuit Diagram (Sht. 8)		-250 A	2500 A
Voltage			320 V	320 V
Load Type	Capacitive	Capacitive	Resistive	Resistive
% Pre Charge	90%	70%	NA	N/A
Switch Mode	Make Only	Make Only	Make/Break	Break Only
Sequence				
1	10K cycles	10 cycles	2	2
2	10K	10	2	—
3	10K	10	2	—
4	10K	10	2	2
5	10K	10	2	—
Etc.	Continue Cycling to Relay Failure			

The testing objective is to verify proper relay function for a given number of consecutive and cumulative cycles under both normal and abnormal conditions in a variety of load switching applications. The life rating of 40K cycles minimum was calculated with 95% Weibull reliability.

Electrical Data (Over Temperature Range — Max. Terminal Temp. = 200°C)

Make/Break Life for Capacitive & Resistive Loads at 320 Vdc [1,2] —
@ 90% Capacitive Pre-Charge — 50,000 cycles
@ 70% Capacitive Pre-Charge — 50 cycles
@ -250 A (2 Consecutive, Reverse Polarity) [1] — 10 cycles
@ 3300 A (Break only, 2 Consecutive) [1] — 4 cycles

Mechanical Life — 100,000 cycles

Notes:
1 Resistive load includes inductance L = 25 µH. Load @ 2500 A tested @ 200 µH.
2 Conductor: 2 each of copper 54 mm² (AWG 0) required for > 250 A carry. 1 Copper (AWG 0) conductor recommended for ≤ 250 A

For factory-direct application assistance, dial 800-253-4560, ext. 2055, or 805-220-2055.

EV500 "BUBBA" Contactor 600 Amps, Make & Break Load Switching

Product Facts

- **Very high power sealed contactor**
- **Hydrogen dielectric for power switching high current loads**
- **Excellent for safety disconnect and transfer switch applications**
- **Suited for circuit protection control**
- **Hermetically "Super-sealed" environment uniquely protects contacts and all moving parts; can operate in harsh environments**
- **600-1000 A continuous carry, dependent on temperature and conductors used**
- **3,300 A interrupt, 1,000 A make, @ 320 Vdc**
- **12 and 24 volt coil control options. Call TE for custom options**
- **360 kW power switch capable**
- **200°C hot power terminals capable**
- **Bi-directional power switching**
- **Auxiliary contacts optional**
- **Built-in dual power coil economizer, 8W holding typical**
- **Versatile power, voltage, and current operating range: 28-1800 Vdc***

For factory-direct application assistance, dial 800-253-4560, ext. 2055, or 805-220-2055.

Product Specifications

Contact Arrangement with Auxiliary Contacts —
Form X — SPST-NO
Form A — SPST-NO

Rated Resistive Load @ 270 Vdc, 85°C (Continuous/10 sec) —
600 A/1,600 A

Continuous Current Carry, Max., 25°C [1] — 750 A

Overload Current @ 320 Vdc, Max. —
Make (Closed Into) — 1,000 A
Break (Open) — 3,300 A

Contact Resistance, Max. —
0.0002 ohm

Dielectric at Sea Level (Leakage < 1mA) —
Open Power Terminal to Terminal — 2,000 Vrms
Closed Power Terminals to All Other Points — 2,000 Vrms

Shock, 11ms, 1/2 Sine (Peak), Operating — 30 g

Vibration, Sinusoidal (80-2000 Hz, Peak) — EV500-5 — 5 g
EV500-4 — 10 g

Operating Ambient Temperature Range — -40°C to +85°C

Load Life (Mechanical/ Electrical) [2] — See next page

Operate Time @ 25°C —

Close (Includes Bounce), Typ. — 40 ms

Bounce (After Close Only), Max. — 5 ms

Release Time (Includes Arcing), Max. at 2500 A — 20 ms

Insulation Resistance @ 500 Vdc, Min. — 100 mohm

Weight, Nominal —
3.38 lb (1.53 kg)

Notes:
1. Current Carry: 750 A @ 25°C. Derate 2.5 A/°C to 600 A @ 85°C for still air, no heat sink. Reference National Electric Code for specific conductor size recommendation versus current. For > 600 A carry, call TE and request the "EV500 Current Carry study" for additional data.
2. See EV500 sales drawing for complete specifications, including normal capacitive pre-charge make, plus abnormal make and break ratings.

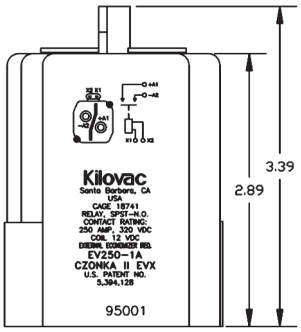

Electrical Life Cycles vs Power Switching

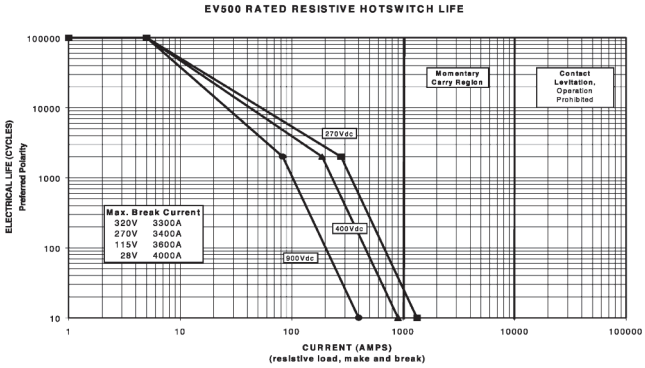

*Failure mode: Dielectric withstand voltage test @ 2000 Vdc, power terminal to terminal, leakage exceeds 1.0 A.

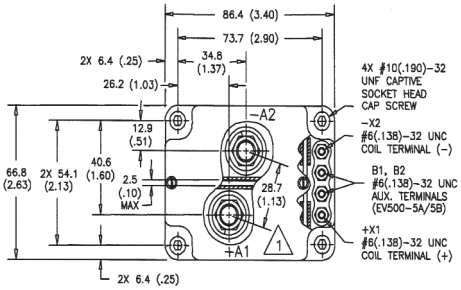

Coil Data

	12 V	24 V
Type Driver	2 Coil Electronic	
Volts, Nominal*	12 Vdc	24 Vdc
Pickup (Close), Max.	9.9 Vdc	19.7 Vdc
Hold, Min.	9 Vdc	18 Vdc
Dropout (Open), Min.	2 Vdc	4 Vdc
Current (@ VsNom / 25°C)		
Inrush	3.3 A	1.7 A
Holding, Standby	0.74 A	0.37 A
Inrush Time, Max.	300 ms	300 ms

Ordering Information

Sample Part Number ▶ **EV500 4 A**

Series:

Auxiliary Contacts:
4 = Without
5 = With

Coil Voltage:
A = 12 Vdc
B = 24 Vdc

Refer to EV500 Sales Drawing for complete specifications.

Catalog 5-1773450-5
Revised 3-13

www.te.com

Dimensions are shown for reference purposes only. Specifications subject to change.

Dimensions are in millimeters unless otherwise specified.

USA: +1 800 522 6752
Asia Pacific: +86 0 400 820 6015
UK: +44 800 267 666

For additional support numbers please visit www.te.com

EV500 "BUBBA" Contactor 600 Amps, Make & Break Load Switching (Continued)

Current vs Time

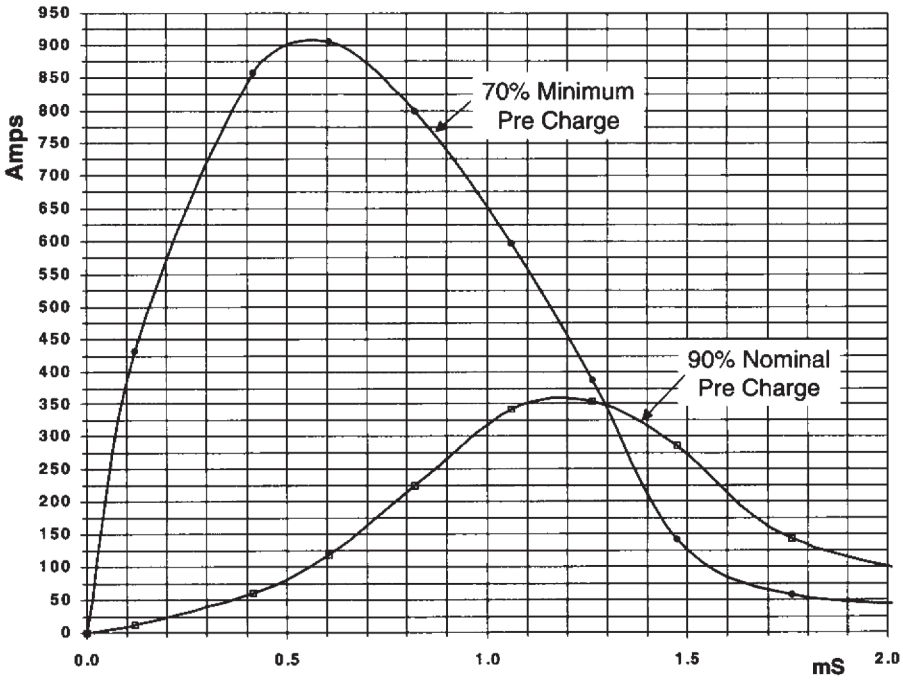

Life Ratings and Qualification Test Plan

	Normal Operations		Abnormal Operations	
Test #	**1**	**2**	**3**	**4**
Current	Reference Graph and Test Circuit Diagram (Sht. 8)		-250 A	3300 A
Voltage			320 V	320 V
Load Type	Capacitive	Capacitive	Resistive	Resistive
% Pre Charge	90%	70%	NA	N/A
Switch Mode	Make Only	Make Only	Make/Break	Break Only
Sequence				
1	10K cycles	10 cycles	2	2
2	10K	10	2	—
3	10K	10	2	—
4	10K	10	2	2
5	10K	10	2	—
Etc.	Continue Cycling to Relay Failure			

The testing objective is to verify proper relay function for a given number of consecutive and cumulative cycles under both normal and abnormal conditions in a variety of load switching applications. The life rating of 40K cycles minimum was calculated with 95% Weibull reliability.

Electrical Data (Over Temperature Range — Max. Terminal Temp. = 200°C)

Make/Break Life for Capacitive & Resistive Loads at 320 Vdc [1,2] —
@ 90% Capacitive Pre-Charge — 50,000 cycles
@ 70% Capacitive Pre-Charge — 50 cycles
@ -250 A (2 Consecutive, Reverse Polarity) [1] — 10 cycles
@ 3300 A (Break only, 2 Consecutive) [1] — 4 cycles

Mechanical Life — 100,000 cycles

Notes:
1 Resistive load includes inductance L = 25 µH.
2 Testing is limited at this time. Consult TE for official ratings.

For factory-direct application assistance, dial 800-253-4560, ext. 2055, or 805-220-2055.

PD350X - 500 Amps "BUBBA" Contactor, Make & Break Load Switching

Product Facts

- **500 A carry, 1300 A make overload, 3000 A break overload, @ 320 Vdc**
- **Hydrogen dielectric for power switching high current loads**
- **Auxiliary contacts**
- **Coil power economizing — 8 W holding**
- **Versatile power, voltage, and current operating range**
- **Excellent for safety disconnect and transfer switch applications**
- **Suited for circuit protection and control**
- **Bi-directional power switching**
- **Hermetically-sealed contacts; can operate in harsh environments**
- **Fast operate and release time**
- **Low power consumption**

For factory-direct application assistance, dial 800-253-4560, ext. 2055, or 805-220-2055.

Contact Rating Notes:
1. Maximum continuous current carry = 500A @ 25°C = T_A, derate 5A/°C for higher temp.
2. Maximum interrupt power (break only) = 1 MW @ 200mH inductance.

Product Specifications

Contact Arrangement — Form X — SPST-NO

Auxiliary Contact (28 Vdc, 0.1 A) — SPST-NO

Rated Resistive Load @ 320 Vdc — 300 Amps @85˚C

Continuous Current Carry, Max. @ 50°C — 500 A

Overload Current @ 320 Vdc —
Make — 1,300 A
Break — 3,300 A

Load Life, @ 320 Vdc, Min. — See chart at right

Contact Resistance, Max. — End of Life — 0.0002 ohm

Dielectric at Sea Level — Power Terminals to Coil and All Other Points — 1,800 Vrms

Shock, 11ms, 1/2 Sine (Peak) — 30 g

Vibration, Sinusoidal (55-2000 Hz, Peak) — 5 g

Operating Ambient Temperature Range — -40°C to +85°C

Operate Time, Including Bounce, Max., 25°C — 40 ms

Release Time, Max. — 20 ms

Bounce Time, Max. — 5 ms

Insulation Resistance @ 500 Vdc, Min. —
Initial — 100 mohm
End of Life — 50 mohm

Weight, Nominal — 3.4 lb (1.52 kg)

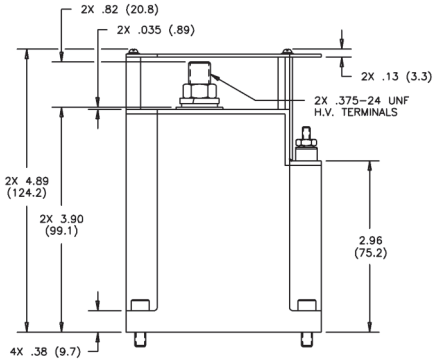

Electrical Life Cycles vs Power Switching

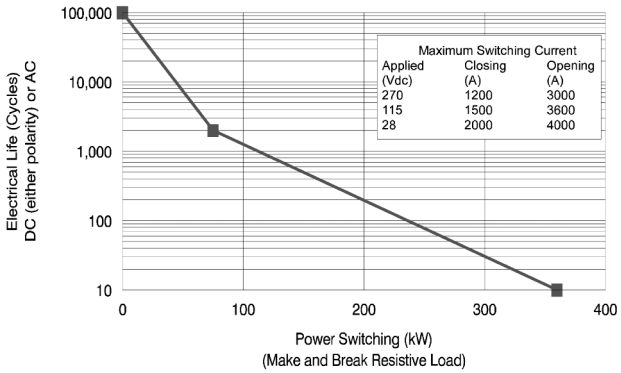

*Failure Mode: Dielectric withstand voltage test @ 2000 Vdc, power terminal to terminal, leakage exceeds 1.0 mA. Current carry: 500 A @ 25°C. Derate 2.5 A/°C to 350 A @ 85°C for still air, no heat sink, AWG# 00 conductor.

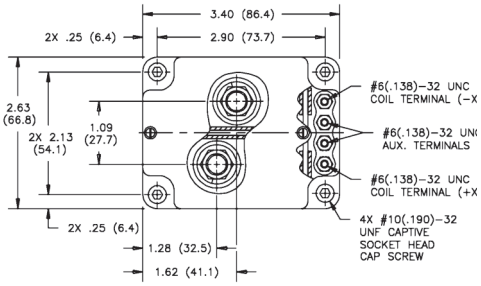

Coil Data

Volts, Nominal	12 V	24 V
Pickup, Max. @ 65°C	9.9 Vdc	19.7 Vdc
Hold, Max. @ 65°C	8.5 Vdc	17 Vdc
Dropout, Min. @ -35°C	1.2 Vdc	2.4 Vdc
Coil Power** 25°C		
During Pickup (300 ms)	43 W	43 W
While Holding	8 W	8 W
Energy, Magnetic, Max.***	.26 J	.26 J

**Two coils are employed for power economizing subsequent to pickup. During pickup both coils operate in parallel drawing 43 Watts momentarily. After pickup, the electronic economizing system leaves only the holding coil on, drawing 8 Watts @ 25°C. Economizing system includes transient voltage suppression.
***Coil energy absorbed internally -4x nominal voltage.

Ordering Information

Sample Part Number ▶ **PD350 X B 5 7**

Series:

Contact Form:
X = SPST-NO, Double Make

Coil Voltage:
A = 12 Vdc, Stud Terminals
B = 24 Vdc, Stud Terminals

Power Terminals:
5 = Stud Terminals

Mounting:
7 = Panel Mount, Captive Bolts

Catalog 5-1773450-5
Revised 3-13

www.te.com

Dimensions are shown for reference purposes only. Specifications subject to change.

Dimensions are in millimeters unless otherwise specified.

USA: +1 800 522 6752
Asia Pacific: +86 0 400 820 6015
UK: +44 800 267 666

For additional support numbers please visit www.te.com

High Voltage Relays Quick Reference Guide

Contact Voltage Vdc	Isolation Voltage Vdc	Carry Current (Amps DC)	Power Switching	RF Ratings	Contact Form	Part Number Series
270 Vdc Aerospace	2000	5	Yes	No	SPST-NO	AP5A
	2000	5	Yes	No	SPST-NC	AP5B
	2000	5	Yes	No	SPDT	AP5C
	2000	10	Yes	No	SPST-NO	AP10A
	2000	10	Yes	No	SPST-NC	AP10B
	2000	10	Yes	No	SPDT	AP10P
	2000	15	Yes	No	SPST-Latch	AP44P
28 Vdc to 1800 Vdc	1800	5	Yes	No	SPST-NO	PD5A
	1800	5	Yes	No	SPST-NC	PD5B
	1800	10	Yes	No	SPST-NO	PD10A
	1800	10	Yes	No	SPST-NC	PD10B
	1800	10	Yes	No	SPST-Latch	PD10P
2.0 kV	2000	6	Carry Only	Yes	SPST-NO	S06CBA
	2000	15	Yes	Yes	SPDT	K45C
3.0 kV	3000	2	Carry Only	No	SPST-NO	S02DNA
3.5 kV	3500	8	Make Only	No	SPDT	HC-5
	3500	15	Yes	Yes	SPDT	HC-3*
	3500	25	Carry Only	Yes	SPDT	HC-1
5.0 kV	5000	8	Carry Only	No	SPST-NO	S06FNA218
	5000	30	Yes	Yes	SPST-NO	K41A
	5000	30	Yes	Yes	SPST-NC	K41B
	5000	30	Yes	Yes	SPDT	K41C
	5000	25	Yes	Yes	SPST-Latch	K41P
	5000	25	Yes	Yes	SPDT-Latch	K41R
	5000	35	Yes	Yes	SPST-Latch	K40P
7.0 kV	7000	6	Carry Only	Yes	SPST-NO	S06HBA
7.5 kV	7500	10	Make Only	No	DPDT	KM-13
	7500	10	Make Only	No	DPDT	KM-17
8.0 kV	8000	6	Carry Only	No	SPST-NC	S06JNB
	8000	8	Make Only	No	SPDT	HC-6
	8000	10	Yes	Yes	DPDT	H-18
	8000	12	Yes	Yes	SPST-NO	K47A
	8000	12	Yes	Yes	SPST-NC	K47B
	8000	15	Yes	No	SPDT	HC-4
	8000	25	No	No	SPDT	HC-2
	8000	50	Yes	Yes	SPST-Latch	K44P

*Consult factory for load switching level.

For factory-direct application assistance, dial 800-253-4560, ext. 2055, or 805-220-2055.

Catalog 5-1773450-5
Revised 3-13

www.te.com

Dimensions are shown for reference purposes only. Specifications subject to change.

Dimensions are in millimeters unless otherwise specified.

USA: +1 800 522 6752
Asia Pacific: +86 0 400 820 6015
UK: +44 800 267 666

For additional support numbers please visit www.te.com

KILOVAC High Voltage Relays Quick Reference Guide (Continued)

Contact Voltage Vdc	Isolation Voltage Vdc	Carry Current (Amps DC)	Power Switching	RF Ratings	Contact Form	Part Number Series
10 kV	10000	5	Yes	No	SPST-NO	S05LTA
	10000	5	Yes	No	SPST-NC	S05LTB
	10000	5-30	Special	No	SPST-NO	K81A
	10000	5-30	Special	No	SPST-NC	K81B
	10000	5-30	Special	No	SPDT	K81C
	10000	25	Special	Yes	SPST-NO	K43A
	10000	25	Special	Yes	SPST-NC	K43B
	10000	25	Special	Yes	SPDT	K43C
	10000	24	Special	Yes	SPDT-Latch	K43R
	10000	24	Special	Yes	SPST-Latch	K43P
12 kV	12000	30	Yes	Yes	DPDT	H-14
	12000	30	Yes	Yes	DPDT	H-16
15 kV	15000	5	Yes	No	SPST-NO	S05MTA
	15000	12	Make Only	No	SPDT	KC-15
	15000	12	Make Only	No	SPDT	KC-16
	15000	15	Yes	Yes	SPDT	H-8
	15000	15	Yes	No	SPDT	KC-14
	15000	15	Yes	No	SPDT	KC-18
	15000	30	Yes	No	SPDT	KC-12
	15000	30	Carry Only	Yes	4PDT	H-26
	15000	30	Yes	No	SPDT	KC-8
	15000	50	Carry Only	Yes	SPDT	KC-2
	15000	50	Carry Only	Yes	SPDT	KC-11
20 kV	20000	30	Special	Yes	DPDT	H-19
25 kV	25000	15	Make Only	No	SPST-NC	KC-38
	25000	18	Special	No	SPST-NO	K62A
	25000	18	Special	No	SPST-NC	K62B
	25000	18	Special	No	SPDT	K62C
	25000	30	Special	Yes	SPDT	H-17
	25000	30	Make Only	No	SPST-NO	KC-28
	25000	45	Special	No	SPST-NC	KC-32
	25000	55	Carry Only	Yes	SPST-NC	KC-30
	25000	65	Special	No	SPST-NO	KC-22
	25000	110	Carry Only	Yes	SPST-NO	KC-20
30 kV	30000	30	Special	Yes	SPST-NC	H-23
	30000	30	Special	Yes	SPST-NO	H-24
35 kV	35000	10	Make Only	No	SPDT	K60C
	35000	10	Make Only	No	SPST-NO	K61A
	35000	10	Make Only	No	SPST-NC	K61B
	35000	10	Make Only	No	SPDT	K61C
50 kV	50000	10	Make Only	No	SPDT	K64C
	50000	30	Special	No	SPDT	H-25
70 kV	70000	10	Make Only	No	SPST-NO	K70A
	70000	10	Make Only	No	SPST-NC	K70B
	70000	10	Make Only	No	SPDT	K70C

*Consult factory for load switching level.

For factory-direct application assistance, dial 800-253-4560, ext. 2055, or 805-220-2055.

AP5/AP10 Relays

Product Facts

- **AP5 make and break 5 A; AP10 make and break 10 A @ 270 Vdc**
- **20 A overload rating**
- **Latching actuator available for low power consumption**
- **Ideal for applications from 28 to 1000 Vdc**
- **Small size and weight**
- **Wide variety of mounting styles (see pages 54 and 55)**
- **No heat sinks required**
- **2000 V isolation across open contacts**
- **Vacuum-sealed contacts; can operate in harsh environments**
- **Qualified to SAE ARD 50031**
- **Space-rated version built in accordance with customers SCD**

AP5A, AP5B, & AP5C Relays — 5 Amps

Product Specifications

Contact Arrangement —
AP5A — SPST-NO
AP5B — SPST-NC
AP5C — SPDT

Contact Form —
AP5A — A
AP5B — B
AP5C — C

Rated Resistive Load @ 270 Vdc — 5 A*

Continuous Current Carry, Max. —
AP5A, AP5B, AP5C — 25 A**

Overload @ 270 Vdc —
AP5A, AP5B — 20 A
AP5C— 10 A

Contact Resistance, Max. — 10 mohm

Dielectric at Sea Level —
Coil to Case — 500 Vrms
All Other Points — 2,000 Vrms

Shock, 11ms, 1/2 Sine (Peak) —
AP5A, AP5B, AP5C— 50 g

Vibration, Sinusoidal (55-2000 Hz, Peak) — 10 g

Operating Ambient Temperature Range — -55°C to +85°C

Load Life @ 270 Vdc, Min. —
AP5A, AP5B — 50,000 cycles
AP5C — 10,000 cycles

Operate Time, Excluding Bounce, Max. —
AP5A, AP5B, AP5C — 7 ms

Release Time, Max. —
AP5A, AP5B, AP5C — 10 ms

Bounce Time, Max. —
AP5A, AP5B, AP5C — 3 ms

Insulation Resistance @ 500 Vdc, Min. —
Initial — 100 mohm
End of Life — 50 mohm

Weight, Nominal —
28 gram (1 oz.)

AP10A, AP10B, AP10P & AP11A Relays — 10 Amps

Product Specifications

Contact Arrangement —
AP10A — SPST-NO
AP10B — SPST-NC
AP10P — SPST Latching

Contact Form —
AP10A — A
AP10B — B
AP10P — P

Rated Resistive Load @ 270 Vdc — 10 A*

Continuous Current Carry, Max. —
AP10A, AP10B — 25 A**
AP10P — 30 A**

Overload @ 270 Vdc — 20 A

Contact Resistance, Max. — 10 mohm

Dielectric at Sea Level —
Coil to Case — 500 Vrms
All Other Points — 2,000 Vrms

Shock, 11ms, 1/2 Sine (Peak) — 50 g

Vibration, Sinusoidal (55-2000 Hz, Peak) — 10 g

Operating Ambient Temperature Range — -55°C to +85°C

Load Life @ 270 Vdc, Min. —
AP10A — 10,000 cycles
AP10B, AP10P — 7,000 cycles

Operate Time, Excluding Bounce, Max. —
AP10A, AP10B — 7 ms
AP10P — 4 ms

Release Time, Max. —
AP10A, AP10B — 10 ms
AP10P — N/A

Bounce Time, Max. —
AP10A, AP10B — 3 ms
AP10P — 2 ms

Insulation Resistance @ 500 Vdc, Min. —
Initial — 100 mohm
End of Life — 50 mohm

Weight, Nominal —
28 gram (1 oz.)

Notes:
*The load terminals should always be connected as follows: Common Contact +; Other Contact –.
**10 amps for PC board connection.

Coil Data

Volts, Nominal	12	28	28 [2]	120
Pickup, Max. [1]	10 Vdc	20 Vdc	16 Vdc	85 Vdc
Dropout, Min.	.3-6 Vdc	.7-12 Vdc	N/A	5-55 Vdc
Coil Resistance (±10%)	53 Ω	290 Ω	80 Ω	4700 Ω

Coil resistance rated at 25°C
Notes:
1. Value for AP5C is 24 for 28 Vdc coil & 100 for 120 Vdc coil
2. Latching

Ordering Information

Sample Part Number ▶ **AP5 C 3 4 5**

Series:

Contact Form:
A = SPST-NO B = SPST-NC C = SPDT
P = SPST Latching

Coil Voltage:
2 = 12Vdc, Bus Wire/PC Board
3 = 28 Vdc, Bus Wire/PC Board
5 = 120 Vdc, Bus Wire/PC Board
7 = 12 Vdc, Turret Terminals
8 = 28 Vdc, Turret Terminals
9 = 120 Vdc, Turret Terminals
A = 12 Vdc, Stud Terminals, Panel Mount
B = 28 Vdc, Stud Terminals, Panel Mount
C = 120 Vdc, Stud Terminals, Panel Mount

Power Terminals:
3 = Solder Connection/PC Board 4 = Flying Leads
5 = Stud Terminals, Panel Mount

Mounting:
2 = Flanged Mount 4 = Through Chassis Mount
5 = PCB Mount 7 = Panel Mount

For factory-direct application assistance, dial 800-253-4560, ext. 2055, or 805-220-2055.

Catalog 5-1773450-5
Revised 3-13
www.te.com

Dimensions are shown for reference purposes only. Specifications subject to change.

Dimensions are in millimeters unless otherwise specified.

USA: +1 800 522 6752
Asia Pacific: +86 0 400 820 6015
UK: +44 800 267 666

For additional support numbers please visit www.te.com

AP5/AP10 Relays (Continued)

Through chassis style mounting with solder type power terminals and turret coil terminals (Available in forms A, B, & C)

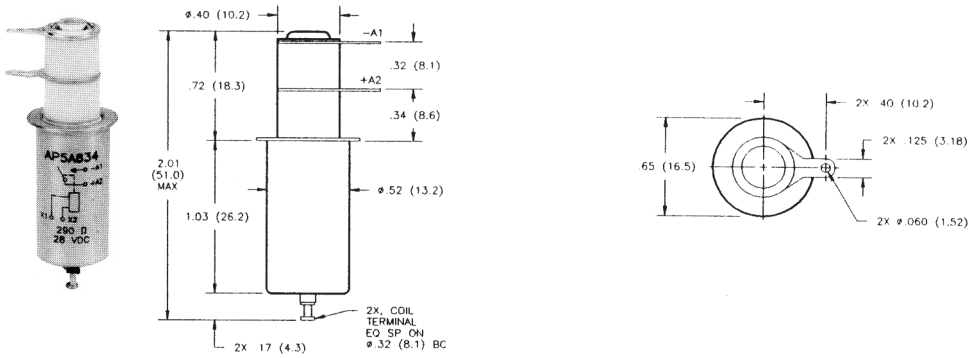

AP5A834 Shown as Part Number Sample

Through chassis style mounting with solder type power terminals and bus wire coil leads (Available in forms A, B, C, P)

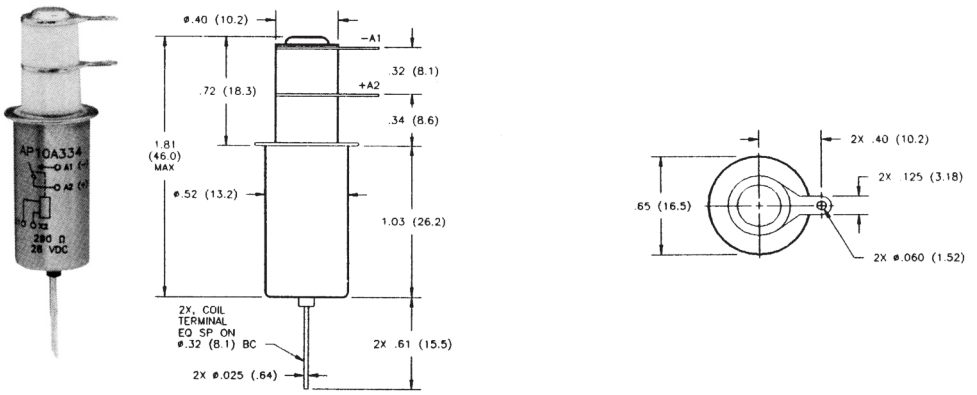

AP10A334 Shown as Part Number Sample

Flanged style mounting with solder type power terminals and turret coil terminals (Available in forms A, B, & C)

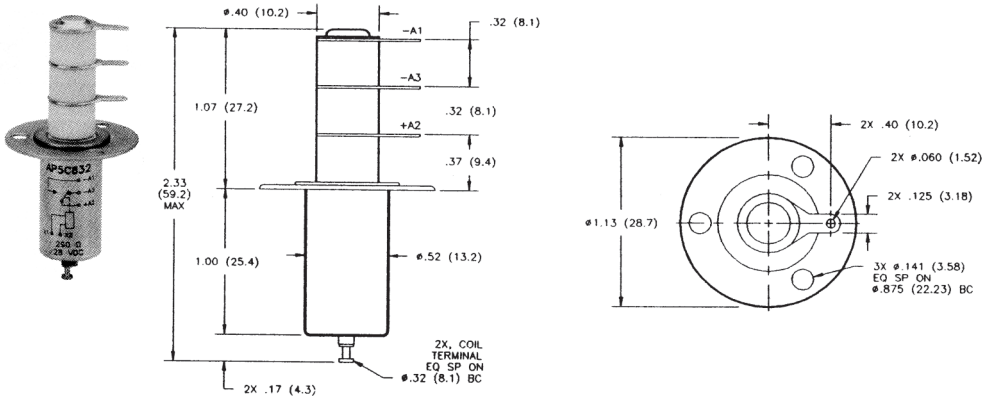

AP5C832 Shown as Part Number Sample

Flanged style mounting with solder type power terminals and bus wire coil leads (Available in forms A, B, C, P)

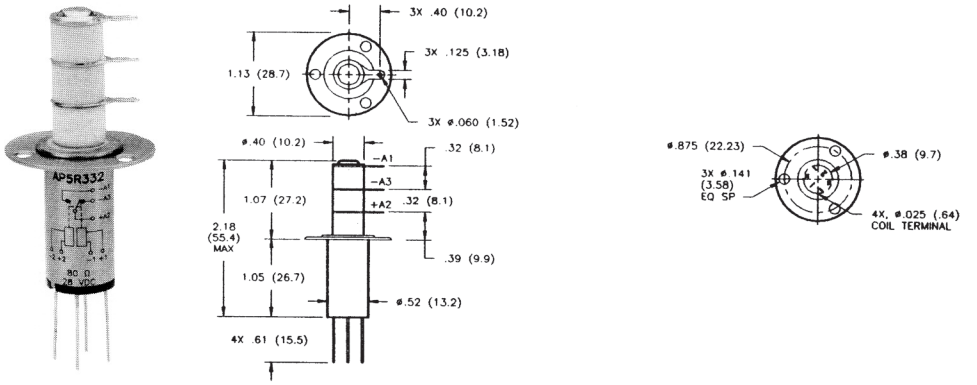

AP5C332 Shown as Part Number Sample

For factory-direct application assistance, dial 800-253-4560, ext. 2055, or 805-220-2055.

Dimensions are shown for reference purposes only. Specifications subject to change.

Dimensions are in millimeters unless otherwise specified.

USA: +1 800 522 6752
Asia Pacific: +86 0 400 820 6015
UK: +44 800 267 666

For additional support numbers please visit www.te.com

AP5/AP10 Relays (Continued)

PC board style mounting with PC board terminals (Available in forms A, B, & C)

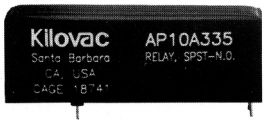

AP10A335 Shown as Part Number Sample

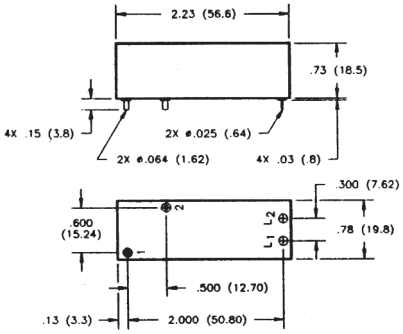

Panel style mounting with flying power leads and stud terminals (Available in forms A & B)

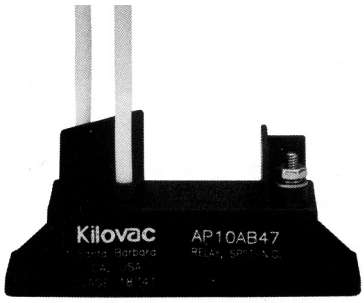

AP10AB47 Shown as Part Number Sample

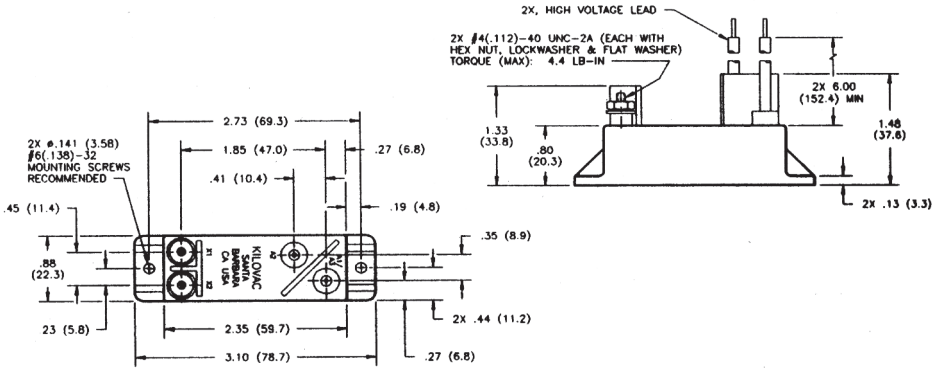

Panel style mounting with stud terminals (Available in forms A & B)

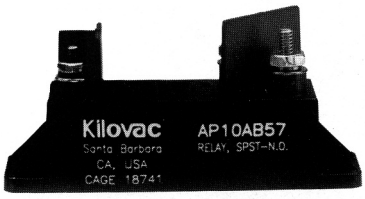

AP10AB57 Shown as Part Number Sample

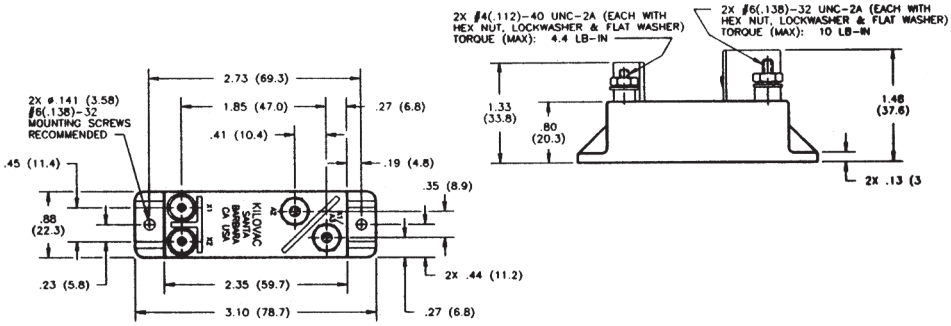

For factory-direct application assistance, dial 800-253-4560, ext. 2055, or 805-220-2055.

Catalog 5-1773450-5
Revised 3-13

www.te.com

Dimensions are shown for reference purposes only. Specifications subject to change.

Dimensions are in millimeters unless otherwise specified.

USA: +1 800 522 6752
Asia Pacific: +86 0 400 820 6015
UK: +44 800 267 666

For additional support numbers please visit www.te.com

AP44P — 15 Amps

Product Facts

- 15 A make and break @ 270 Vdc
- 45 A carry
- 60 A overload rating
- Ideal for high voltage applications from 28 to 270 Vdc
- Latching actuator for low power consumption
- 2000 V isolation across open contacts
- Small size and weight
- Space-rated version built in accordance with customers SCD
- Meets many requirements of MIL-PRF-32085

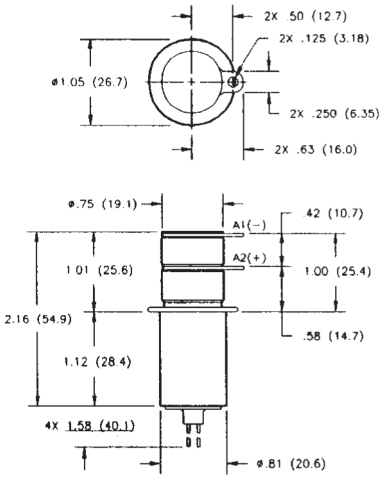

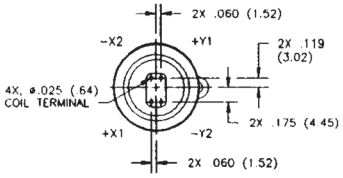

Product Specifications

Contact Arrangement — SPST Latching

Contact Form — P

Rated Resistive Load @ 270 Vdc — 15 A*

Continuous Current Carry, Max. — 45 A

Overload @ 270 Vdc — 60 A

Contact Resistance, Max. — 10 mohm

Dielectric at Sea Level —
Coil to Case — 500 Vrms
All Other Points — 2,000 Vrms

Shock, 11ms, 1/2 Sine (Peak) — 50 g

Vibration, Sinusoidal (55-2000 Hz, Peak) — 15 g**

Operating Ambient Temperature Range — -55°C to +85°C

Load Life @ 270 Vdc, Min. — 5,000 cycles

Operate Time, Excluding Bounce, Max. — 2 ms

Release Time, Max. — N/A

Bounce Time, Max. — 3 ms

Latch/Reset Time, Including Bounce, Max. — 5 ms

Insulation Resistance @ 500 Vdc, Min. —
Initial — 100 mohm
End of Life — 50 mohm

Weight, Nominal — 43 gram (1.5 oz.)

Notes:
*The load terminals should always be connected as follows: Common Contact +; Other Contact –.

Coil Data

AP44P	28 Latching
Latch, Max.	22 Vdc
Reset, Max.	22 Vdc
Coil Resistance (±10%)	80 Ω

Coil resistance rated at 25°C

Ordering Information

Sample Part Number ▶ **AP44 P 3 3 4**

Series:

Contact Form:
P = SPST Latching

Coil Voltage:
3 = 28 Vdc, Bus Wire

Power Terminals:
3 = Solder Connection

Mounting:
4 = Standard

For factory-direct application assistance, dial 800-253-4560, ext. 2055, or 805-220-2055.

Catalog 5-1773450-5
Revised 3-13

www.te.com

Dimensions are shown for reference purposes only. Specifications subject to change.

Dimensions are in millimeters unless otherwise specified.

USA: +1 800 522 6752
Asia Pacific: +86 0 400 820 6015
UK: +44 800 267 666

For additional support numbers please visit www.te.com

PD5 Make & Break Load Switching

Product Facts

- Vacuum dielectric for power switching
- Excellent for control applications
- PCB and panel mountings
- Rugged design for the most demanding applications, including seismic shock
- Small size and weight
- Low power consumption
- No heat sinks required
- Vacuum-sealed; can operate in explosive and harsh environments
- 2000 V isolation across open contacts

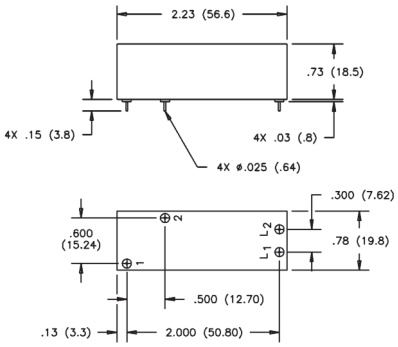

Product Specifications

Contact Arrangement —
PD5A — SPST-NO
PD5B — SPST-NC

Contact Form —
PD5A — A**
PD5B — B**

Rated Resistive Load @ 320 Vdc — 5 A

Continuous Current Carry, Max. @ 85°C — 15 A

Overload @ 320 Vdc, (Make/Break) — 20 A

Life, (Mechanical/Rated Load) — 500k cycles/50k cycles

Contact Resistance, Max., End of Life — 0.010 ohm

Dielectric at Sea Level —
Power Terminals to Coil and All Other Points — 1,800 Vrms

Shock, 11ms, 1/2 Sine (Peak) — 25 g

Vibration, Sinusoidal (55-2000 Hz, Peak) — 5 g

Operating Ambient Temperature Range — -40°C to +85°C

Operate Time, Max., Including Bounce @ 25°C — 10 ms

Release Time, Max., Including Bounce @ 25°C — 10 ms

Insulation Resistance @ 500 Vdc, Min. —
Initial/End of Life — 100 mohm/50 mohm

Weight, Nominal —
57 g (.125 lb)

Note:
**Contact TE for availability of other contact forms

Contact Ratings*

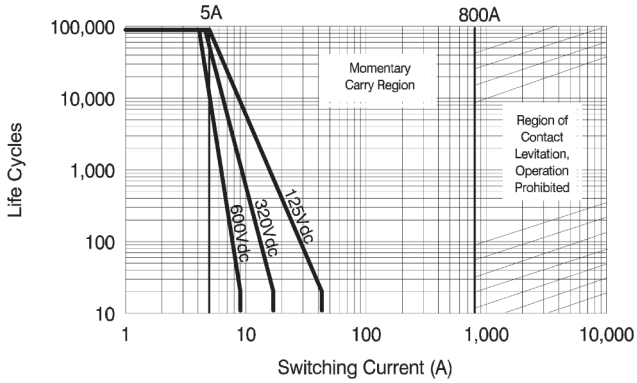

*Based on extrapolated data. Since each application is unique, user is encouraged to verify rating in actual application. The load terminals should always be connected as follows: Common Contact (A2) positive; Other Contact negative.

Coil Data

Nominal Volts DC	12 Vdc	24 Vdc	125 Vdc
Max. Coil Voltage	14 Vdc	28 Vdc	130 Vdc
Pickup, Max. @ 85°C	8 Vdc	16 Vdc	80 Vdc
Hold, Min. @ 85°C	3.3 Vdc	10 Vdc	33 Vdc
Dropout, Min. @ -40°C	.5 Vdc	1 Vdc	5 Vdc
Coil Resistance (±10%)	70 Ω	290 Ω	4700 Ω

Ratings listed are for 25°C, sea level conditions

Ordering Information

Sample Part Number ▶ **PD5 A 2 3 5**

Series:

Contact Form:
A = SPST-NO
B = SPST-NC
C = SPDT (PCB Only)

Coil Voltage:
2 = 12 Vdc, PCB Version
3 = 24 Vdc, PCB Version
5 = 125 Vdc, PCB Version
A = 12 Vdc, Panel Mount Version
B = 24 Vdc, Panel Mount Version
C = 125 Vdc, Panel Mount Version

Power Terminals:
3 = PCB Solder Connection
5 = Stud Terminal, Panel Mount

Mounting:
5 = PCB Mount
7 = Panel Mount

For factory-direct application assistance, dial 800-253-4560, ext. 2055, or 805-220-2055.

Catalog 5-1773450-5
Revised 3-13

www.te.com

Dimensions are shown for reference purposes only. Specifications subject to change.

Dimensions are in millimeters unless otherwise specified.

USA: +1 800 522 6752
Asia Pacific: +86 0 400 820 6015
UK: +44 800 267 666

For additional support numbers please visit www.te.com

PD10 Make & Break Load Switching

Product Facts

- Excellent for control applications
- PCB and panel mountings
- Rugged design for the most demanding applications, including seismic shock
- Small size and weight
- Low power consumption
- No heat sinks required
- Vacuum-sealed; can operate in explosive and harsh environments
- 2000 V isolation across open contacts
- Vacuum dielectric for power switching

For factory-direct application assistance, dial 800-253-4560, ext. 2055, or 805-220-2055.

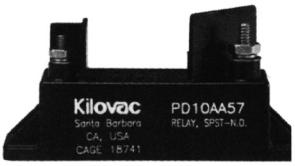

Panel mount version shown above is applicable to both PD5 and PD10. For PD10, the two power terminals are .064" (1.63) diameter. Refer to PD5 for PCB mount dimensions.

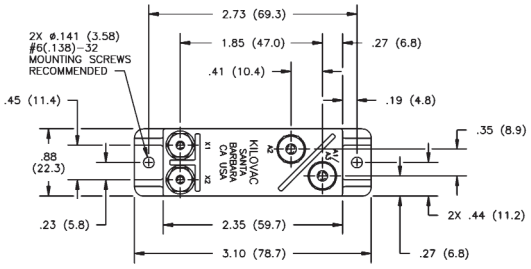

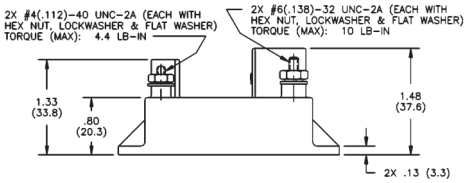

Product Specifications

Contact Arrangement —
PD10A — SPST-NO
PD10B — SPST-NC
PD10P*** — SPST-Latching

Contact Form —
PD10A — A**
PD10B — B**
PD10P*** — P**

Rated Resistive Load @ 320 Vdc — 10 A

Continuous Current Carry, Max. @ 85°C —
PD10A and PD10B — 25 A
PD10P*** — 30 A

Overload @ 320 Vdc, (Make/Break) — 20 A

Life, (Mechanical/Rated Load) —
PD10A and PD10B —
500k cycles/10k cycles
PD10P*** — 7,000 cycles

Contact Resistance, Max., End of Life —
PD10A and PD10B — 0.030 ohm
PD10P*** — 0.030 ohm

Dielectric at Sea Level —
Power Terminals to Coil and All Other Points —
PD10A and PD10B — 1,800 Vrms
PD10P*** — 2,000 Vrms

Shock, 11ms, 1/2 Sine (Peak) — 25 g

Vibration, Sinusoidal (55-2000 Hz, Peak) — 5 g

Operating Ambient Temperature Range —
PD10A and PD10B — -40°C to +85°C
PD10P*** — -35°C to +65°C

Operate Time, Max., Including Bounce @ 25°C —
PD10A and PD10B — 10 ms
PD10P*** — 6 ms

Release Time, Max., Including Bounce @ 25°C —
PD10A and PD10B — 10 ms
PD10P*** — 6 ms

Insulation Resistance @ 500 Vdc, Min. —
Initial/End of Life — 100 mohm/50 mohm

Weight, Nominal —
71 g (.156 lb)

Notes:
**Contact TE for availability of other contact forms
***Not available in package shown, package is the same as the K41P.

Contact Ratings*

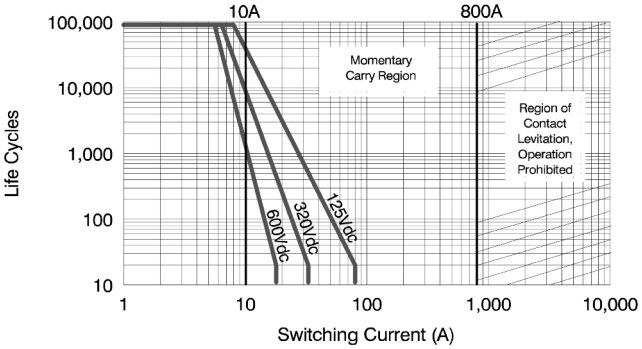

*Based on extrapolated data. Since each application is unique, user is encouraged to verify rating in actual application. The load terminals should always be connected as follows: Common Contact (A2) positive; Other Contact negative.

Coil Data

Nominal Volts DC	12 Vdc	24 Vdc	125 Vdc
Max. Coil Voltage	14 Vdc	28 Vdc	130 Vdc
Pickup, Max. @ 85°C	8 Vdc	16 Vdc	80 Vdc
Hold, Min. @ 85°C	3.3 Vdc	10 Vdc	33 Vdc
Dropout, Min. @ -40°C	.5 Vdc	1 Vdc	5 Vdc
Coil Resistance (±10%)	70 Ω	290 Ω	4700 Ω

Ratings listed are for 25°C, sea level conditions

Ordering Information

Sample Part Number ▶ **PD10 A A 5 7**

Series:

Contact Form:
A = SPST-NO
B = SPST-NC
P = SPST-Latching

Coil Voltage:
2 = 12 Vdc, PCB Version
3 = 24 Vdc, PCB Version
5 = 125 Vdc, PCB Version
A = 12 Vdc, Panel Mount Version
B = 24 Vdc, Panel Mount Version
C = 125 Vdc, Panel Mount Version

Power Terminals:
3 = PCB Solder Connection
5 = Stud Terminal, Panel Mount

Mounting:
5 = PCB Mount
7 = Panel Mount

Catalog 5-1773450-5
Revised 3-13

www.te.com

Dimensions are shown for reference purposes only. Specifications subject to change.

Dimensions are in millimeters unless otherwise specified.

USA: +1 800 522 6752
Asia Pacific: +86 0 400 820 6015
UK: +44 800 267 666

For additional support numbers please visit www.te.com

K45 Series Make & Break Load Switching — 1.5 - 2 kV Relays

K45C

Product Facts

- **Small, low profile 2 kV relay**
- **Vacuum dielectric for power switching low current loads**
- **Single pole, double throw contacts**
- **Widely used in H.F. communication equipment**
- **Meets requirements of MIL-R-83725**
- **Low power consumption**

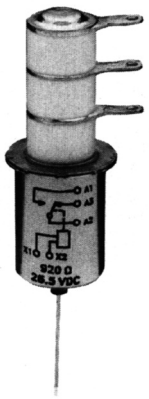

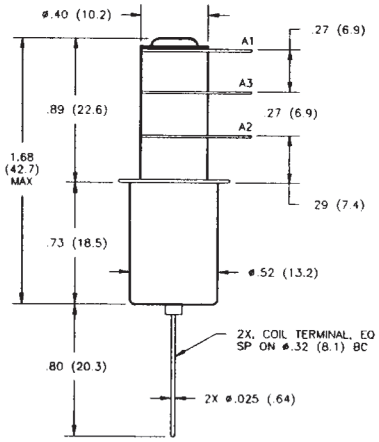

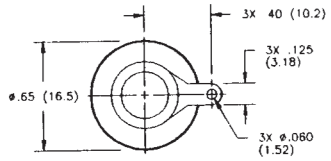

Product Specifications

Contact Arrangement — SPDT

Contact Form — C

Test Voltage, DC or 60 Hz (Peak) — 4 kV

Rated Operating Voltage (Peak) —
DC or 60 Hz — 2 kV
2.5 MHz — 1.8 kV
16 MHz — 1.4 kV
32 MHz — 1.1 kV

Continuous Carry Current, Max. —
DC or 60 Hz — 20 A
2.5 MHz — 16 A
16 MHz — 10 A
32 MHz — 6 A
Coil Hi-Pot (Vrms, 60 Hz) — 500 A

Contact Capacitance —
Between Open Contacts — 1.6 pF
Open Contacts to Ground — 2 pF

Contact Resistance, Max. — 0.05 ohm

Operate Time, Max. — 10 ms

Release Time, Max. — 10 ms

Shock, 11ms, 1/2 Sine (Peak) — 30 g

Vibration —
Peak — 10 g (10 to 2000 Hz)

Operating Ambient Temperature Range — -55°C to +125°C

Mechanical Life
2 million cycles

Weight, Nominal —
21.26 g (0.75 oz.)

Coil Data

Volts, Nominal DC	12 V	26.5 V
Pickup, Max.	8 Vdc	16 Vdc
Hold, Max. @ 65°C	8.5 Vdc	17 Vdc
Dropout	.5-5 Vdc	1-10 Vdc
Coil Resistance (±10%)	230 Ω	920 Ω

Ratings listed are for 25°C, sea level conditions.

Ordering Information

Sample Part Number ▶ **K45 C 3 3 4**

Series:

Contact Form:
C = SPDT

Coil Voltage:
2 = 12 Vdc, Bus Wire
3 = 26.5 Vdc, Bus Wire

High Voltage Connections:
3 = Solder Connection

Mounting:
2 = Flanged
4 = Standard

See page 7-87 for mounting methods.

For factory-direct application assistance, dial 800-253-4560, ext. 2055, or 805-220-2055.

Catalog 5-1773450-5
Revised 3-13

www.te.com

Dimensions are shown for reference purposes only. Specifications subject to change.

Dimensions are in millimeters unless otherwise specified.

USA: +1 800 522 6752
Asia Pacific: +86 0 400 820 6015
UK: +44 800 267 666

For additional support numbers please visit www.te.com

HC Series — 3.5 kV Relays

HC-1
No Load Switching

HC-3
Make & Break Load Switching

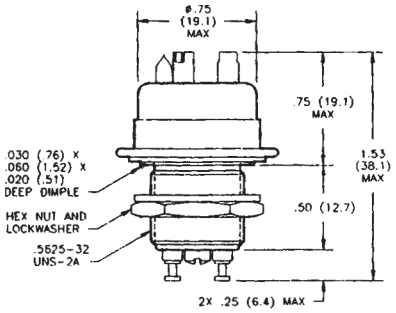

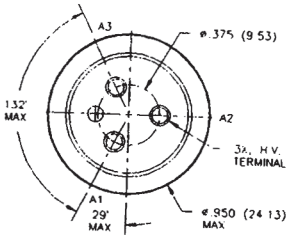

Product Facts for HC-1

- **Widely used for RF applications**
- **Vacuum dielectric for low leakage current applications**
- **Copper contacts for high current capability**
- **Not designed for power switching**
- **Meets requirements of MIL-R-83725**
- **QPL version available, M83725/5-001**

Product Facts for HC-3

- **Tungsten contacts for long life when power switching**
- **Vacuum dielectric for power switching low current loads**

For factory-direct application assistance, dial 800-253-4560, ext. 2055, or 805-220-2055.

HC-5
Make Only Load Switching

Product Facts for HC-5

- **Gas-filled for "make only" power switching**
- **SF-6 gas-filled for capacitive discharge applications**
- **Tungsten contacts for long life when power switching**

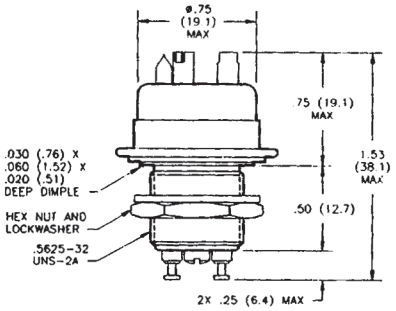

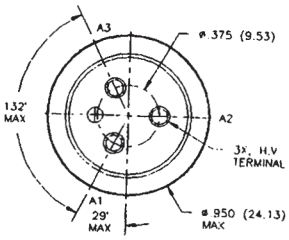

Product Specifications for HC-1, HC-3 and HC-5

Contact Arrangement — SPDT

Contact Form — C

Test Voltage, DC or 60 Hz (Peak) — 5 kV

Rated Operating Voltage (Peak) —
DC or 60 Hz — 3.5 kV
2.5 MHz — 2.5 kV
16 MHz — 2 kV
32 MHz — 1.5 kV

Continuous Carry Current, Max. —
DC or 60 Hz — HC-1 — 25 A
HC-3 — 18 A
HC-5 — 8 A
2.5 MHz — HC-1 — 14 A

16 MHz — HC-1 — 9 A

32 MHz — HC-1 — 7 A

Coil Hi-Pot (Vrms, 60 Hz) — 500 A

Contact Capacitance —
Between Open Contacts —
HC-1 —2 pF

Open Contacts to Ground —
HC-1 —2.5 pF

Contact Resistance, Max. —
HC-1 — 0.01 ohm
HC-3 — 0.02 ohm
HC-5 — 0.50 ohm*

Operate Time, Max. — 6 ms

Release Time, Max. — 6 ms

Shock, 11ms, 1/2 Sine (Peak) — 50 g

Vibration —
Peak — 10 g (55 to 2000 Hz)

Operating Ambient Temperature Range — -55°C to +125°C

Mechanical Life —
HC-1, HC-3 — 2 million cycles
HC-5 — 1 million cycles

Weight, Nominal —
28.35 g (1.0 oz.)

Note:
*Contact resistance for gas-filled relays is measured at 28 Vdc, 1 Amp

Coil Data

Nominal Volts DC	12 Vdc	26.5 Vdc	115 Vdc
Pickup, Max.	8 Vdc	16 Vdc	80 Vdc
Dropout	.5-5 Vdc	1-10 Vdc	5-50 Vdc
Coil Resistance (±10%)	80 Ω	335 Ω	6000 Ω

Ratings listed are for 25°C, sea level conditions

Ordering Information

Sample Part Number ▶ **HC- 1 /12Vdc**

Series:

Model:
1
3
5

Coil Voltage:
Blank = 26.5 Vdc
/12Vdc = 12 Vdc
/115Vdc = 115 Vdc

Catalog 5-1773450-5
Revised 3-13

www.te.com

Dimensions are shown for reference purposes only. Specifications subject to change.

Dimensions are in millimeters unless otherwise specified.

USA: +1 800 522 6752
Asia Pacific: +86 0 400 820 6015
UK: +44 800 267 666

For additional support numbers please visit www.te.com

K41 Series Make & Break Load Switching — 5.0 kV Relays

K41A, K41B Product Facts

- High current carry rating
- Vacuum dielectric for power switching low current loads
- Glazed ceramics for low current leakage
- Compact, space-saving design
- Meets requirements of MIL-R-83725
- QPL versions available, M83725/21 & M83725/22

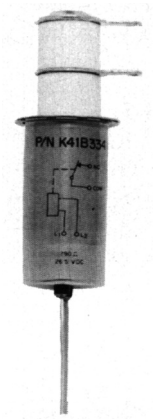

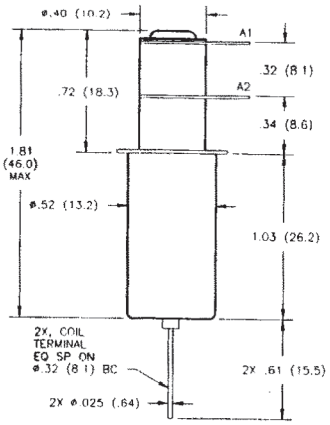

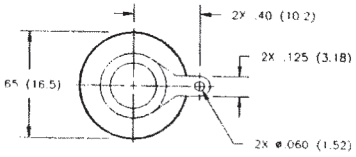

K41C Product Facts

- Single pole, double throw version
- Vacuum dielectric for power switching low current loads
- RF ratings to 32 MHz
- Long life: 2 million cycles
- Meets requirements of MIL-R-83725
- QPL version available, M83725/23

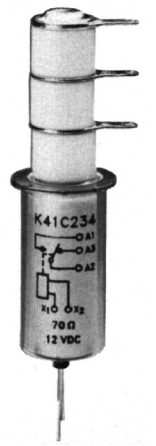

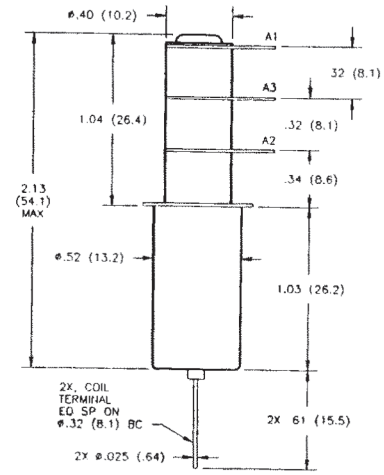

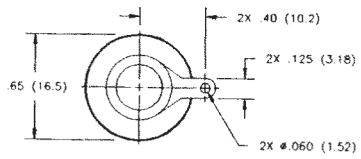

Product Specifications for K41A, K41B and K41C

Contact Arrangement —
K41A — SPST-NO
K41B — SPST-NC
K41C — SPDT

Contact Form —
K41A — A
K41B — B
K41C — C

Test Voltage, DC or 60 Hz (Peak) — 6 kV

Rated Operating Voltage (Peak) —
DC or 60 Hz — 5 kV
2.5 MHz — 4.5 kV
16 MHz — 3.5 kV
32 MHz — 2.8 kV

Continuous Carry Current, Max. —
DC or 60 Hz — 30 A
2.5 MHz — 24 A
16 MHz — 16 A
32 MHz — 12 A
Coil Hi-Pot (Vrms, 60 Hz) — 500 A

For factory-direct application assistance, dial 800-253-4560, ext. 2055, or 805-220-2055.

Contact Capacitance —
Between Open Contacts — 1.2 pF
Open Contacts to Ground — 1.2 pF

Contact Resistance, Max. — 0.02 ohm

Operate Time, Max. — 10 ms

Release Time, Max. — 10 ms

Shock, 11ms, 1/2 Sine (Peak) — 50 g

Vibration —
Peak — 10 g (55 to 2000 Hz)

Operating Ambient Temperature Range — -55°C to +125°C

Mechanical Life — 2 million cycles

Weight, Nominal —
28.35 g (1.0 oz.)

***See page 7-87 for turret terminal dimensions and mounting methods.**

Coil Data

Nominal Volts DC	12 Vdc	26.5 Vdc	115 Vdc
Pickup, Max.	8 Vdc	16 Vdc	80 Vdc
Dropout	.5-5 Vdc	1-10 Vdc	5-50 Vdc
Coil Resistance (±10%)	70 Ω	290 Ω	4700 Ω

Ratings listed are for 25°C, sea level conditions

Ordering Information

Sample Part Number ▶ **K41 A 3 3 4**

Series:

Contact Form:
A = SPST-NO B = SPST-NC C = SPDT

Coil Voltage:
2 = 12 Vdc, Bus Wire 3 = 26.5 Vdc, Bus Wire
5 = 115 Vdc, Bus Wire 7 = 12 Vdc, Turret Terminal*
8 = 26.5 Vdc, Turret Terminal*
9 = 115 Vdc, Turret Terminal*

High Voltage Connections:
3 = Solder Connection

Mounting:
2 = Flanged 4 = Standard

Catalog 5-1773450-5
Revised 3-13

www.te.com

Dimensions are shown for reference purposes only. Specifications subject to change.

Dimensions are in millimeters unless otherwise specified.

USA: +1 800 522 6752
Asia Pacific: +86 0 400 820 6015
UK: +44 800 267 666

For additional support numbers please visit www.te.com

K41 Series Make & Break Load Switching — 5.0 kV Relays

K41P

Product Facts

- Fast, 6 millisecond operate time
- Vacuum dielectric for power switching low current loads
- Latching actuator for low power consumption
- Ideal for frequency agile communication systems
- Meets requirements of MIL-R-83725
- QPL version available, M83725/24

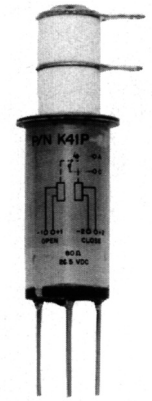

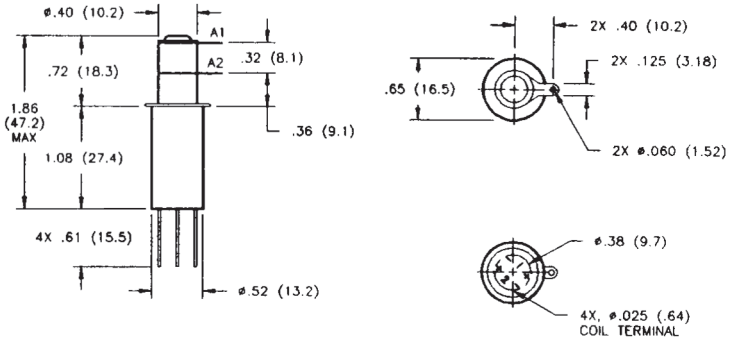

K41R

Product Facts

- Latching actuator for low power consumption
- Vacuum dielectric for power switching low current loads
- Meets requirements of MIL-R-83725
- Latching version of K41C

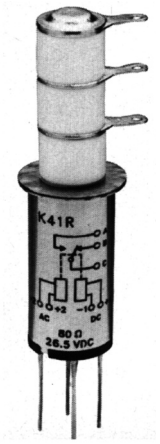

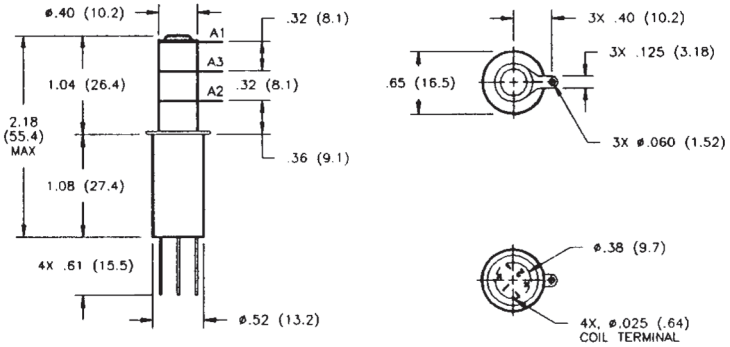

Product Specifications for K41P and K41R

Contact Arrangement —
K41P — SPST-Latching
K41R — SPDT-Latching

Contact Form —
K41P — P
K41R — R

Test Voltage, DC or 60 Hz (Peak) — 6 kV

Rated Operating Voltage (Peak) —
DC or 60 Hz — 5 kV
2.5 MHz — K41P — 4.5 kV
K41R — 4.0 kV
16 MHz — K41P — 3.5 kV
K41R — 3.2 kV
32 MHz — K41P — 2.8 kV
K41R — 2.5 kV

Continuous Carry Current, Max. —
DC or 60 Hz — 30 A
2.5 MHz — K41P — 20 A
K41R — 16 A
16 MHz — K41P — 13 A
K41R — 10 A
32 MHz — K41P — 10 A
K41R — 6 A
Coil Hi-Pot (Vrms, 60 Hz) — 500 A

For factory-direct application assistance, dial 800-253-4560, ext. 2055, or 805-220-2055.

Contact Capacitance —
Between Open Contacts —
K41P — 1.2 pF
K41R — 1.6 pF
Open Contacts to Ground —
K41P — 1.2 pF
K41R — 1.6 pF

Contact Resistance, Max. — 0.02 ohm

Operate Time, Max. — 6 ms

Release Time, Max. — N/A

Shock, 11ms, 1/2 Sine (Peak) —
K41P — 50 g
K41R — 30 g

Vibration —
Peak — 10 g (55 to 2000 Hz)

Operating Ambient Temperature Range — -55°C to +125°C

Insulation Resistance —
Initial — 10 gigaohms

Mechanical Life — 1 million cycles

Weight, Nominal —
28.35 g (1.0 oz.)

Coil Data

Volts, Nominal	26.5 Vdc
Reset & Latch, Max.	16 Vdc
Dropout	N/A
Coil Resistance (±10%)	80 Ω

Ratings listed are for 25°C, sea level conditions.

Ordering Information

Sample Part Number ▶ **K41 P 3 3 4**

Series:

Contact Form:
P = SPST-Latching R = SPDT-Latching

Coil Voltage:
3 = 26.5 Vdc, Bus Wire

High Voltage Connections:
3 = Solder Connection

Mounting:*
2 = Flanged 4 = Standard

***See page 7-87 for mounting methods.**

Catalog 5-1773450-5
Revised 3-13

www.te.com

Dimensions are shown for reference purposes only. Specifications subject to change.

Dimensions are in millimeters unless otherwise specified.

USA: +1 800 522 6752
Asia Pacific: +86 0 400 820 6015
UK: +44 800 267 666

For additional support numbers please visit www.te.com

K40P Make & Break Load Switching — 5.0 kV Relays

Product Facts for K40P

- **Vacuum dielectric for power switching low current loads**
- **Fast, 1 millisecond operate time**
- **Long life: 10 million cycles**
- **35 Amps continuous current rating at DC; 8 Amps at 32 MHz**
- **Ideal for high power antenna couplers**
- **Meets requirements of MIL-R-83725**

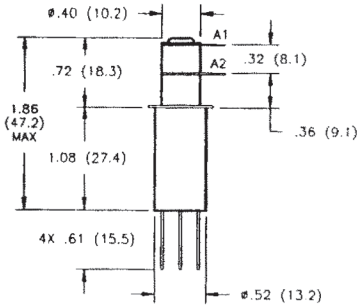

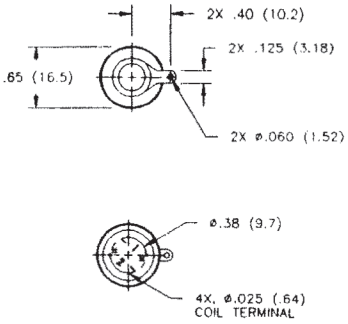

Product Facts for K40P364

- **Double sided terminals for ease of connection to bus bar**
- **Vacuum dielectric for power switching low current loads**
- **Fast switching, high current capabilities**
- **Small and lightweight**

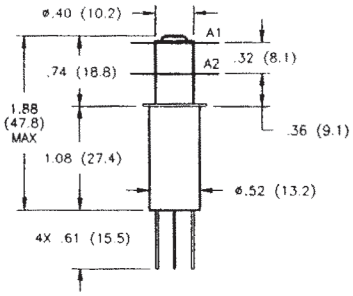

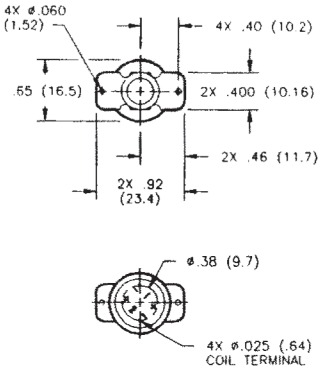

Product Specifications

Contact Arrangement — SPST-Latching

Contact Form — P

Test Voltage, DC or 60 Hz (Peak) — 6 kV

Rated Operating Voltage (Peak) —
DC or 60 Hz — 5 kV
2.5 MHz — 4.5 kV
16 MHz — 3.5 kV
32 MHz — 2.8 kV

Continuous Carry Current, Max. —
DC or 60 Hz — 35 A
2.5 MHz — 21 A
16 MHz — 14 A
32 MHz — 8 A
Coil Hi-Pot (Vrms, 60 Hz) — 500 A

Contact Capacitance —
Between Open Contacts — 1.2 pF
Open Contacts to Ground — 1.2 pF

Contact Resistance, Max. — 0.02 ohm

Operate Time, Max. — 1 ms

Release Time, Max. — N/A

Shock, 11ms, 1/2 Sine (Peak) — 50 g

Vibration —
Peak — 30 g (55 to 2000 Hz)

Operating Ambient Temperature Range — -55°C to +125°C

Mechanical Life —10 million cycles

Weight, Nominal — 28.35 g (1.0 oz.)

Coil Data

Volts, Nominal	26.5 Vdc
Reset & Latch, Max.	16 Vdc
Dropout	N/A
Coil Resistance (±10%)	80 Ω

Ratings listed are for 25°C, sea level conditions.

Ordering Information

Sample Part Number ▶ **K40 P 3 3 2**

Series:

Contact Form:
P = SPST-Latching

Coil Voltage:
3 = 26.5 Vdc, Bus Wire

High Voltage Connections:
3 = Solder Connection
6 = Double Sided Solder Connection

Mounting:*
2 = Flanged 4 = Standard

***See page 7-87 for mounting methods.**

For factory-direct application assistance, dial 800-253-4560, ext. 2055, or 805-220-2055.

Catalog 5-1773450-5
Revised 3-13

www.te.com

Dimensions are shown for reference purposes only. Specifications subject to change.

Dimensions are in millimeters unless otherwise specified.

USA: +1 800 522 6752
Asia Pacific: +86 0 400 820 6015
UK: +44 800 267 666

For additional support numbers please visit www.te.com

KM-17 Series Make Only Load Switching — 7.5 kV Relays

Product Facts

- **Double pole, double throw contacts**
- **SF-6 gas-filled for ideal discharge waveform**
- **High voltage flying leads**
- **Tabs for easy mount**
- **Widely used in defibrillator applications**

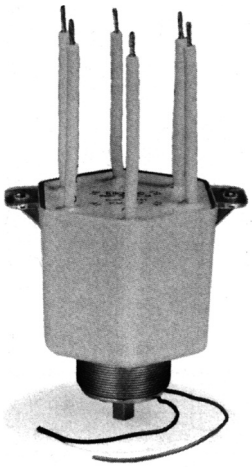

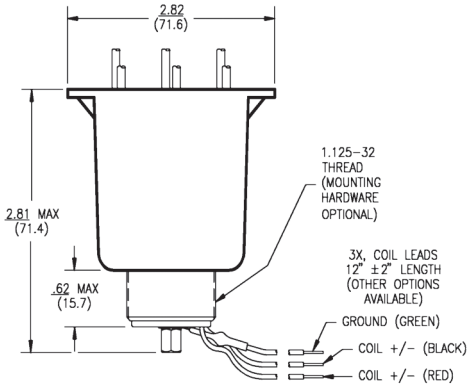

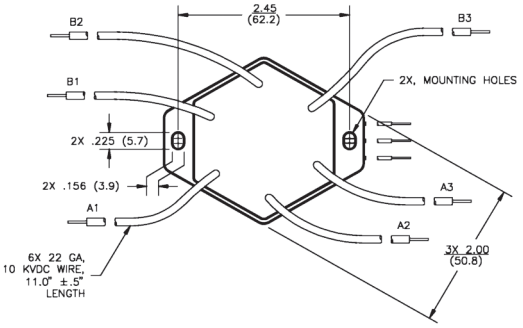

Product Specifications for KM-17

Contact Arrangement — DPDT

Contact Form — 2C

Test Voltage, DC or 60 Hz (Peak) — 14 kV

Rated Operating Voltage (Peak) — DC or 60 Hz — 7.5 kV

Continuous Carry Current, Max. — DC or 60 Hz — 10 A
Coil Hi-Pot (Vrms, 60 Hz) — 500 A

Contact Capacitance —
Between Open Contacts — N/A
Open Contacts to Ground — N/A

Contact Resistance, Max. — 0.5 ohm*

Operate Time, Max. — 20 ms

Release Time, Max. — 20 ms

Shock, 11ms, 1/2 Sine (Peak) — 10 g

Vibration —
Peak — 10 g (55 to 500 Hz)

Operating Ambient Temperature Range — -20°C to +65°C

Insulation Resistance —
Initial — 10 gigaohms

Mechanical Life
— 10I0,000 cycle

Weight, Nominal —
KM-17 — 311.8 g (11 oz.)

Ordering Information

Sample Part Number ▶ **KM- 17 /26Vdc**

Series:

Model:
17

Coil Voltage:
Blank = 12 Vdc
/26.5Vdc = 26.5 Vdc

Coil Data

Nominal Volts DC	12 Vdc	26 Vdc
Pickup, Max.	8 Vdc	16 Vdc
Dropout	.5-5 Vdc	1-10 Vdc
Coil Resistance (±10%)	12 Ω	48 Ω

Ratings listed are for 25°C, sea level conditions
Coils are not for continuous duty.

For factory-direct application assistance, dial 800-253-4560, ext. 2055, or 805-220-2055.

Catalog 5-1773450-5
Revised 3-13

www.te.com

Dimensions are shown for reference purposes only. Specifications subject to change.

Dimensions are in millimeters unless otherwise specified.

USA: +1 800 522 6752
Asia Pacific: +86 0 400 820 6015
UK: +44 800 267 666

For additional support numbers please visit www.te.com

K47 Series Make & Break Load Switching — 8 kV Relays

K47A

Product Facts for K47A

- **Widely used in antenna coupler applications**
- **Short actuator, low profile, 8 kV relay**
- **Vacuum dielectric for power switching low current loads**
- **Normally open contacts**
- **Meets requirements of MIL-R-83725**

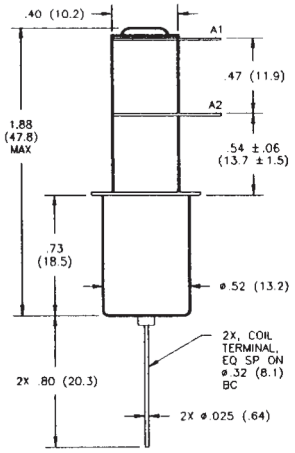

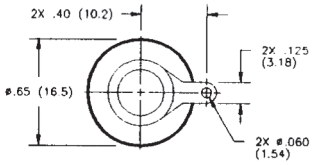

K47B

Product Facts for K47B

- **Normally closed version of K47**
- **Vacuum dielectric for power switching low current loads**
- **707 Ohm coil for low power consumption**
- **Meets requirements of MIL-R-83725**
- **QPL version available, M83725/18-003**

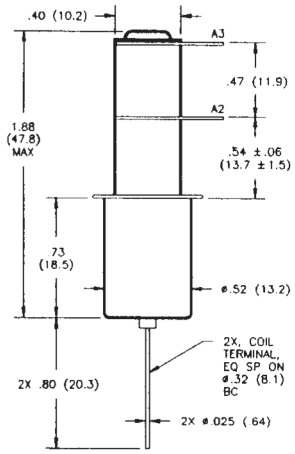

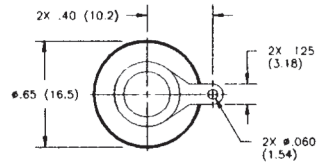

Product Specifications for K47A and K47B

Contact Arrangement —
K47A — SPST-NO
K47B — SPST-NC

Contact Form —
K47A — A
K47B — B

Test Voltage, DC or 60 Hz (Peak) — 9 kV

Rated Operating Voltage (Peak) —
DC or 60 Hz — 8 kV
2.5 MHz — 7.5 kV
16 MHz — 7 kV
32 MHz — 5 kV

Continuous Carry Current, Max. —
DC or 60 Hz — 12 A
2.5 MHz — 10 A
16 MHz — 5 A
32 MHz — 3 A
Coil Hi-Pot (Vrms, 60 Hz) — 500 A

Contact Capacitance —
Between Open Contacts — 1.2 pF
Open Contacts to Ground — 1.2 pF

For factory-direct application assistance, dial 800-253-4560, ext. 2055, or 805-220-2055.

Contact Resistance, Max. — 0.03 ohm

Operate Time, Max. — 10 ms

Release Time, Max. — 10 ms

Shock, 11ms, 1/2 Sine (Peak) — 30 g

Vibration —
Peak — 10 g (55 to 1000 Hz)

Operating Ambient Temperature Range — -55°C to +125°C

Mechanical Life — 2 million cycles

Weight, Nominal —
25.5 g (0.9 oz.)

***See page 7-87 for mounting methods.**

Coil Data

Nominal Volts DC	12 Vdc	26.5 Vdc
Pickup, Max.	8 Vdc	16 Vdc
Dropout	.5-5 Vdc	1-10 Vdc
Coil Resistance (±10%)	230 Ω	707 Ω

Ratings listed are for 25°C, sea level conditions

Ordering Information

Sample Part Number ▶ **K47 A 3 3 4**

Series:

Contact Form:
A = SPST-NO B = SPST-NC

Coil Voltage:
2 = 12 Vdc, Bus Wire
3 = 26.5 Vdc, Bus Wire

High Voltage Connections:
3 = Solder Connection

Mounting:
2 = Flanged 4 = Standard

Catalog 5-1773450-5
Revised 3-13

www.te.com

Dimensions are shown for reference purposes only. Specifications subject to change.

Dimensions are in millimeters unless otherwise specified.

USA: +1 800 522 6752
Asia Pacific: +86 0 400 820 6015
UK: +44 800 267 666

For additional support numbers please visit www.te.com

HC Series — 8 kV Relays

HC-2
No Load Switching

HC-4
Make & Break Load Switching

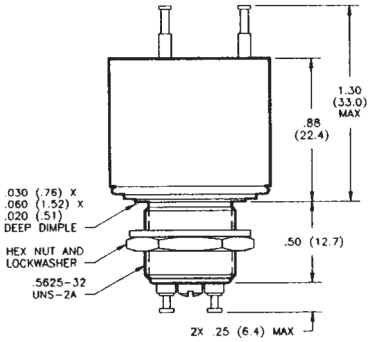

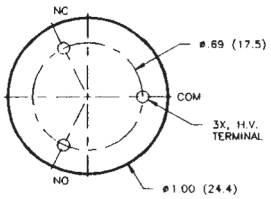

Product Facts for HC-2

- **Vacuum dielectric and copper contacts for high current carry rating of 25 Amps**
- **Not designed for power switching**
- **Stable, low contact resistance**
- **Meets requirements of MIL-R-83725**

Product Facts for HC-4

- **Tungsten contacts for long life in power switching applications**
- **Vacuum dielectric for arc suppression when making or breaking a load**
- **Meets requirements of MIL-R-83725**

HC-6
Make Only Load Switching

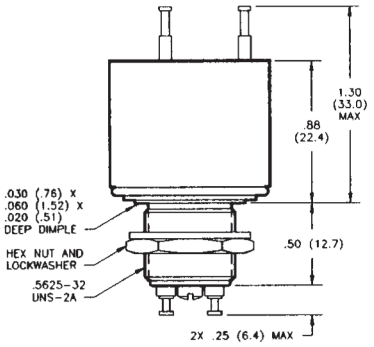

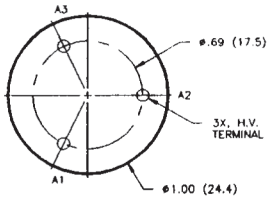

Product Facts for HC-6

- **Tungsten contacts for switching high in-rush loads**
- **SF-6 gas-filled for capacitive discharge applications**
- **Suitable for ESD testing applications**
- **Tungsten contacts for long life in power switching applications**

Product Specifications for HC-2, HC-4 and HC-6

Contact Arrangement — SPDT

Contact Form — C

Test Voltage, DC or 60 Hz (Peak) — 10 kV

Rated Operating Voltage (Peak) — DC or 60 Hz — 8 kV

Continuous Carry Current, Max. — DC or 60 Hz — HC-2 — 25 A RMS
HC-4 — 15 A RMS
HC-6 — 8 A RMS

Coil Hi-Pot (Vrms, 60 Hz) — 500 A RMS

Contact Capacitance —
Between Open Contacts — N/A
Open Contacts to Ground — N/A

Contact Resistance, Max. —
HC-2 — 0.01 ohm
HC-4 — 0.02 ohm
HC-6 — 0.5 ohm*

Operate Time, Max. — 6 ms

Release Time, Max. — 6 ms

Shock, 11ms, 1/2 Sine (Peak) — 50 g

Vibration —
Peak — 10 g (55 to 2000 Hz)

Operating Ambient Temperature Range — -55°C to +125°C

Mechanical Life —
HC-2 and HC-4 — 2 million cycles
HC-6 — 1 million cycle

Weight, Nominal —
39.69 g (1.4 oz.)

*Contact resistance for gas-filled relays is measured at 28 Vdc, 1 Amp

For factory-direct application assistance, dial 800-253-4560, ext. 2055, or 805-220-2055.

Coil Data

Nominal Volts DC	12 Vdc	26.5 Vdc	115 Vdc
Pickup, Max.	8 Vdc	16 Vdc	80 Vdc
Dropout	.5-5 Vdc	1-10 Vdc	5-50 Vdc
Coil Resistance (±10%)	80 Ω	335 Ω	6000 Ω

Ratings listed are for 25°C, sea level conditions

Ordering Information

Sample Part Number ▶ **HC- 6 /12Vdc**

Series:

Model:
2 4 6

Coil Voltage:
Blank = 26.5 Vdc
/12Vdc = 12 Vdc
/115Vdc = 115 Vdc

Catalog 5-1773450-5
Revised 3-13

www.te.com

Dimensions are shown for reference purposes only. Specifications subject to change.

Dimensions are in millimeters unless otherwise specified.

USA: +1 800 522 6752
Asia Pacific: +86 0 400 820 6015
UK: +44 800 267 666

For additional support numbers please visit www.te.com

H-18 Series Make & Break Load Switching — 8 kV Relays

Product Facts

- **Smallest DPDT high voltage relay**
- **Vacuum dielectric for power switching low current loads**
- **8 kV rating; carries 2 Amps at 32 MHz**
- **Tungsten contacts for power switching low current loads**
- **Meets requirements of MIL-R-83725**

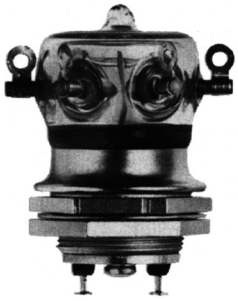

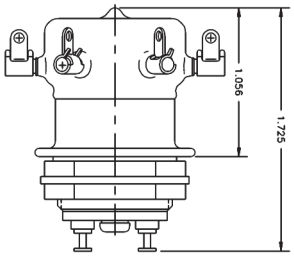

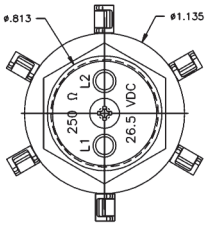

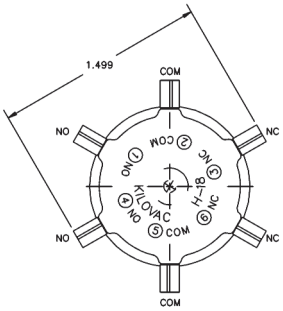

Product Specifications

Contact Arrangement — DPDT

Contact Form — 2C

Test Voltage, DC or 60 Hz (Peak) — 10 kV

Rated Operating Voltage (Peak) —
DC or 60 Hz — 8 kV
2.5 MHz — 5 kV
16 MHz — 3 kV
32 MHz — 2 kV

Continuous Carry Current, Max. —
DC or 60 Hz — 10 A
2.5 MHz — 7 A
16 MHz — 3 A
32 MHz — 2 A
Coil Hi-Pot (Vrms, 60 Hz) — 500 A

Contact Capacitance —
Between Open Contacts — 0.8 pF
Open Contacts to Ground — 1.5 pF

Contact Resistance, Max. — 0.02 ohm

Operate Time, Max. — 15 ms

Release Time, Max. — 15 ms

Shock, 11ms, 1/2 Sine (Peak) — 30 g

Vibration —
Peak — 10 g (55 to 500 Hz)

Operating Ambient Temperature Range — -55°C to +125°C

Mechanical Life — 1 million cycles

Weight, Nominal —
70.87 g (2.5 oz.)

Coil Data

Volts, Nominal DC	12 V	26.5 V	115 V
Pickup, Max.	8 Vdc	16 Vdc	80 Vdc
Dropout	.5-5 Vdc	1-10 Vdc	5-50 Vdc
Coil Resistance (±10%)	60 Ω	250 Ω	3500 Ω

Ordering Information

Sample Part Number ▶ **H-18 /12Vdc**

Series:

Model:
H-18

Coil Voltage:
Blank = 26.5 Vdc
/12Vdc = 12 Vdc
/115Vdc = 115 Vdc

For factory-direct application assistance, dial 800-253-4560, ext. 2055, or 805-220-2055.

Catalog 5-1773450-5
Revised 3-13

www.te.com

Dimensions are shown for reference purposes only. Specifications subject to change.

Dimensions are in millimeters unless otherwise specified.

USA: +1 800 522 6752
Asia Pacific: +86 0 400 820 6015
UK: +44 800 267 666

For additional support numbers please visit www.te.com

K44P Make & Break Load Switching — 8 kV Relays

Product Facts

- **Single pole, single throw contacts with latching actuator**
- **Vacuum dielectric for power switching low current loads**
- **20 G vibration rating**
- **Carries 50 Amps at DC**
- **Space rated versions available**
- **Meets requirements of MIL-R-83725**

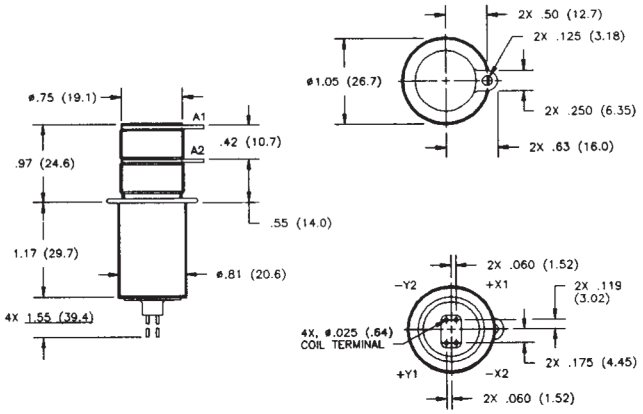

Product Specifications

Contact Arrangement — SPST-Latching

Contact Form — P

Test Voltage, DC or 60 Hz (Peak) — 10 kV

Rated Operating Voltage (Peak) —
DC or 60 Hz — 8 kV
2.5 MHz — 7 kV
16 MHz — 6 kV
32 MHz — 4 kV

Continuous Carry Current, Max. —
DC or 60 Hz — 50 A
2.5 MHz — 40 A
16 MHz — 25 A
32 MHz — 20 A
Coil Hi-Pot (Vrms, 60 Hz) — 500 A

Contact Capacitance —
Between Open Contacts — 2.5 pF
Open Contacts to Ground — 2.8 pF

Contact Resistance, Max. — 0.01 ohm

Operate Time, Max. — 5 ms

Release Time, Max. — N/A

Shock, 11ms, 1/2 Sine (Peak) — 50 g

Vibration —
Peak — 20 g (55 to 2000 Hz)

Operating Ambient Temperature Range — -55°C to +85°C

Mechanical Life — 1 million cycles

Weight, Nominal — 59.53 g (2.1 oz.)

Coil Data

Volts, Nominal	26.5 Vdc
Latch & Reset, Max.	23 Vdc
Dropout	N/A
Coil Resistance (±10%)	155 Ω

Ratings listed are for 25°C, sea level conditions

Ordering Information

Sample Part Number ▶ **K44 P 3 3 4**

Series:

Contact Form:
P = SPST-Latching

Coil Voltage:
3 = 26.5 Vdc, Bus Wire

High Voltage Connections:
3 = Solder Connection

Mounting:
2 = Flanged 4 = Standard

***See page 7-87 for mounting methods.**

For factory-direct application assistance, dial 800-253-4560, ext. 2055, or 805-220-2055.

Catalog 5-1773450-5
Revised 3-13

www.te.com

Dimensions are shown for reference purposes only. Specifications subject to change.

Dimensions are in millimeters unless otherwise specified.

USA: +1 800 522 6752
Asia Pacific: +86 0 400 820 6015
UK: +44 800 267 666

For additional support numbers please visit www.te.com

K81 A/B Series Make & Break Load Switching — 10 kV Relays

Product Facts

- 10 kV PC board-mount relay
- Vacuum dielectric for power switching low current loads
- Flying leads or PCB mount for high voltage connections
- Meets requirements of MIL-R-83725
- Completely sealed; suitable for test equipment
- Panel mount available for ease of mounting

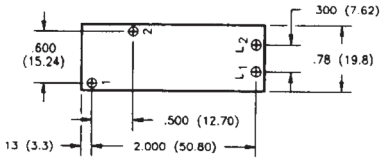

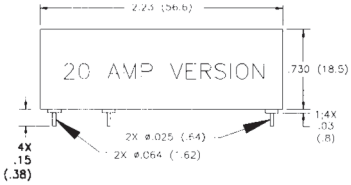

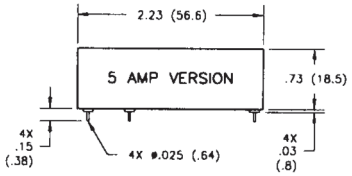

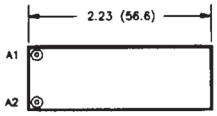

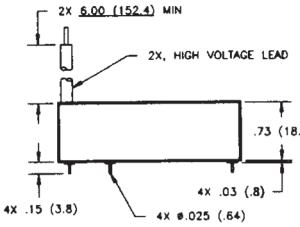

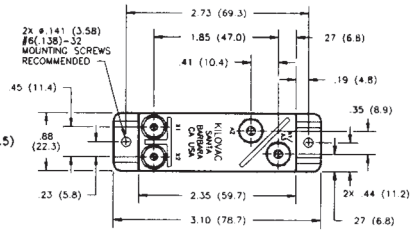

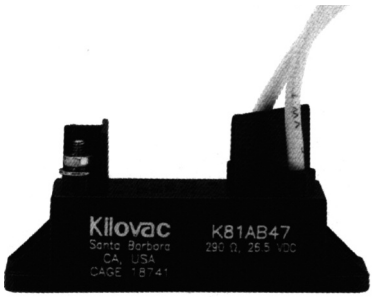

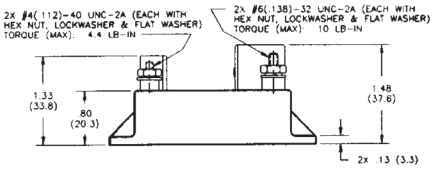

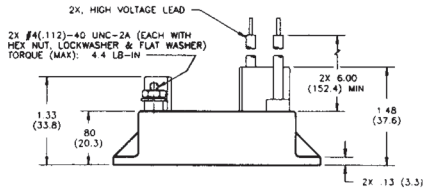

Product Specifications

Contact Arrangement —
K81A — SPST-NO
K81B — SPST-NC

Contact Form —
K81A — A
K81B — B

Test Voltage, DC or 60 Hz (Peak) — 11 kV

Rated Operating Voltage (Peak) — DC or 60 Hz — 10 kV

Continuous Carry Current, Max. — DC or 60 Hz — 5 A, 20 A or 30 A [1]
Coil Hi-Pot (Vrms, 60 Hz) — N/A

Contact Resistance, Max. — 0.03 ohm

Operate Time, Max. — 10 ms

Release Time, Max. — 10 ms

Shock, 11ms, 1/2 Sine (Peak) — 30 g

Vibration —
Peak — 10 g (55 to 500 Hz)

For factory-direct application assistance, dial 800-253-4560, ext. 2055, or 805-220-2055.

Operating Ambient Temperature Range — -55°C to +85°C

Mechanical Life
— 2 million cycles

Weight, Nominal —
56.7 g (2 oz.)

Notes:
1. PC pin versions carry 5 or 20 Amps, see part number at right. Flying lead and panel versions carry 30 Amp.

*Power terminal on 20 Amp version is a larger diameter than on the 5 Amp version (.025 = 5 Amp, .064 = 20 Amp)

Coil Data

Volts, Nominal DC	12 V	26.5 V	115 V
Pickup, Max.	8 Vdc	16 Vdc	80 Vdc
Dropout	.5-5 Vdc	1-10 Vdc	5-50 Vdc
Coil Resistance (±10%)	70 Ω	290 Ω	4700 Ω

Ratings listed are for 25°C, sea level conditions

Ordering Information

Sample Part Number ▶ **K81 A 3 3 5**

Series:

Contact Form:
A = SPST-NO B = SPST-NC

Coil Voltage:
2 = 12 Vdc, PC Board 3 = 26.5 Vdc, PC Board
5 = 115 Vdc, PC Board
A = 12 Vdc, Stud Terminals, Panel Mount
B = 26.5 Vdc, Stud Terminals, Panel Mount
C = 115 Vdc, Stud Terminals, Panel Mount

High Voltage Connections:
A* = PCB Solder Connection — 20 Amp
3 = PCB Solder Connection — 5 Amp
4 = Flying Leads 5 = Stud Terminals

Mounting:
5 = PC Board 7 = Panel Mount

Catalog 5-1773450-5
Revised 3-13

www.te.com

Dimensions are shown for reference purposes only. Specifications subject to change.

Dimensions are in millimeters unless otherwise specified.

USA: +1 800 522 6752
Asia Pacific: +86 0 400 820 6015
UK: +44 800 267 666

For additional support numbers please visit www.te.com

K81C Series Make & Break Load Switching — 10 kV Relays

Product Facts

- **SPDT version of K81**
- **Vacuum dielectric for power switching low current loads**
- **Flying lead version will carry 10 Amps continuous current**
- **PCB mount version will carry 5 Amps continuous current**

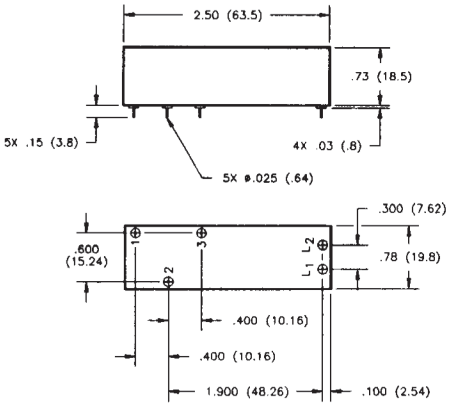

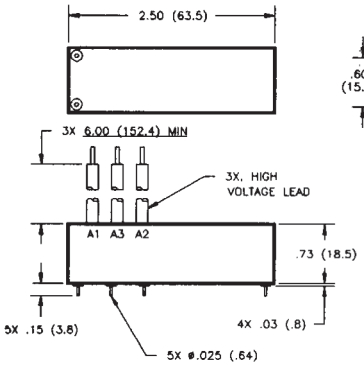

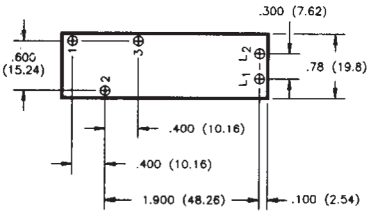

Product Specifications

Contact Arrangement — SPDT

Contact Form — C

Test Voltage, DC or 60 Hz (Peak) — 11 kV

Rated Operating Voltage (Peak) — DC or 60 Hz — 10 kV

Continuous Carry Current, Max. — DC or 60 Hz — See Note 1
Coil Hi-Pot (Vrms, 60 Hz) — N/A

Contact Resistance, Max. — 0.05 ohm

Operate Time, Max. — 10 ms

Release Time, Max. — 10 ms

Shock, 11ms, 1/2 Sine (Peak) — 30 g

Vibration — Peak — 10 g (55 to 500 Hz)

Operating Ambient Temperature Range — -55°C to +85°C

Mechanical Life — 2 million cycles

Weight, Nominal — 70.87 g (2.5 oz.)

Note:
1. 5 Amp carry for PC pin versions. 30 Amp carry for flying lead versions.

Coil Data

Volts, Nominal DC	12 V	26.5 V	115 V
Pickup, Max.	8 Vdc	16 Vdc	80 Vdc
Dropout	.5-5 Vdc	1-10 Vdc	5-50 Vdc
Coil Resistance (±10%)	70 Ω	290 Ω	4700 Ω

Ratings listed are for 25°C, sea level conditions

Ordering Information

Sample Part Number ▶ **K81 C 3 3 5**

Series:

Contact Form:
C = SPDT

Coil Voltage:
2 = 12 Vdc, PC Board
3 = 26.5 Vdc, PC Board
5 = 115 Vdc, PC Board

High Voltage Connections:
3 = PCB Solder Connection
4 = Flying Leads

Mounting:
5 = PC Board

For factory-direct application assistance, dial 800-253-4560, ext. 2055, or 805-220-2055.

Catalog 5-1773450-5
Revised 3-13

www.te.com

Dimensions are shown for reference purposes only. Specifications subject to change.

Dimensions are in millimeters unless otherwise specified.

USA: +1 800 522 6752
Asia Pacific: +86 0 400 820 6015
UK: +44 800 267 666

For additional support numbers please visit www.te.com

K43 Series Make & Break Load Switching — 10 kV Relays

K43A and K43B Product Facts for K43A and K43B

- **10 kV, 25 Amps continuous current relay**
- **RF ratings to 32 MHz**
- **Vacuum dielectric for power switching low current loads**
- **2 million cycle mechanical life**
- **QPL versions available, M83725/17 & M83725/10**

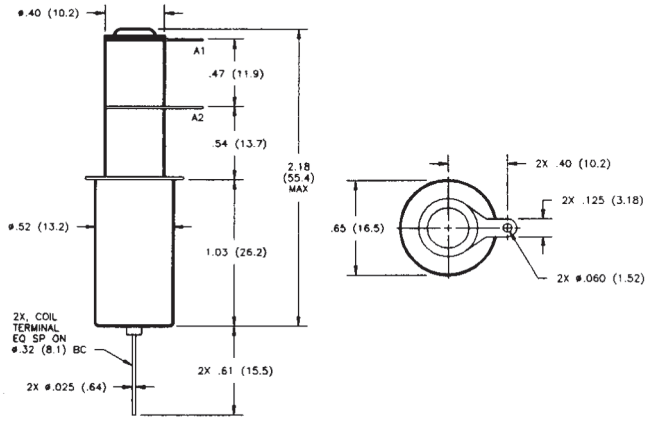

K43C Product Facts for K43C

- **SPDT version of K43**
- **Vacuum dielectric for power switching low current loads**
- **Flange mounting available**
- **Carries 10 Amps at 32 MHz**
- **Meets requirements of MIL-R-83725**
- **QPL version available, M83725/16**

For factory-direct application assistance, dial 800-253-4560, ext. 2055, or 805-220-2055.

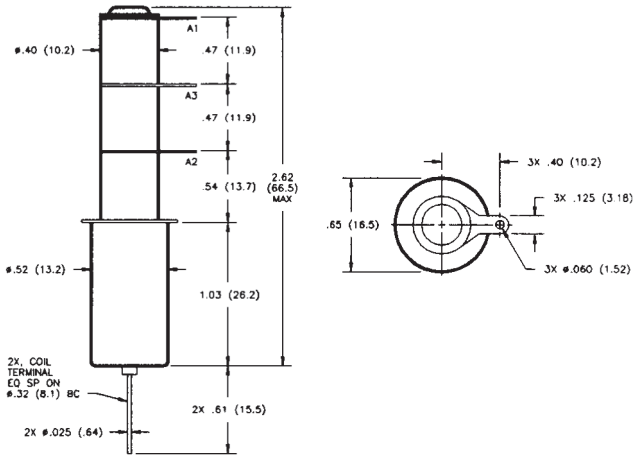

Product Specifications for K43A, K43B and K43C

Contact Arrangement —
K43A — SPST-NO
K43B — SPST-NC
K43C — SPDT

Contact Form —
K43A — A
K43B — B
K43C — C

Test Voltage, DC or 60 Hz (Peak) — 11 kV

Rated Operating Voltage (Peak) —
DC or 60 Hz — 10 kV
2.5 MHz — 7 kV
16 MHz — 6 kV
32 MHz — 4 kV

Continuous Carry Current, Max. —
DC or 60 Hz — 25 A
2.5 MHz — 20 A
16 MHz — 13 A
32 MHz — 10 A
Coil Hi-Pot (Vrms, 60 Hz) — 500 A

Contact Capacitance —
Between Open Contacts — 1.2 pF
Open Contacts to Ground — 1.2 pF

Contact Resistance, Max. — 0.02 ohm

Operate Time, Max. — 10 ms

Release Time, Max. — 10 ms

Shock, 11ms, 1/2 Sine (Peak) — 50 g

Vibration —
Peak — 10 g (55 to 2000 Hz)

Operating Ambient Temperature Range — -55°C to +125°C

Mechanical Life — 2 million cycles

Weight, Nominal — 28.35 g (1 oz.)

***See page 7-87 for turret terminal dimensions and mounting methods.**

Coil Data

Volts, Nominal DC	12 V	26.5 V	115 V
Pickup, Max.	8 Vdc	16 Vdc	80 Vdc
Dropout	.5-5 Vdc	1-10 Vdc	5-50 Vdc
Coil Resistance (±10%)	70 Ω	290 Ω	4700 Ω

Ratings listed are for 25°C, sea level conditions

Ordering Information

Sample Part Number ▶ **K43 A 3 3 4**

Series:

Contact Form:
A = SPST-NO B = SPST-NC C = SPDT

Coil Voltage:
2 = 12 Vdc, Bus Wire
3 = 26.5 Vdc, Bus Wire
5 = 115 Vdc, Bus Wire
7 = 12 Vdc, Turret Terminal*
8 = 26.5 Vdc, Turret Terminal*
9 = 115 Vdc, Turret Terminal*

High Voltage Connections:
3 = Solder Connection

Mounting*:
2 = Flanged 4 = Standard

Catalog 5-1773450-5
Revised 3-13
www.te.com

Dimensions are shown for reference purposes only. Specifications subject to change.

Dimensions are in millimeters unless otherwise specified.

USA: +1 800 522 6752
Asia Pacific: +86 0 400 820 6015
UK: +44 800 267 666

For additional support numbers please visit www.te.com

K43 Series Make & Break Load Switching — 10 kV Relays (Continued)

KILOVAC K43P Make & Break Load Switching

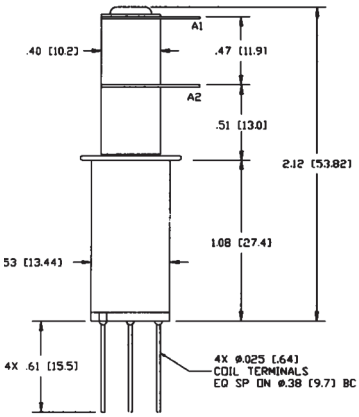

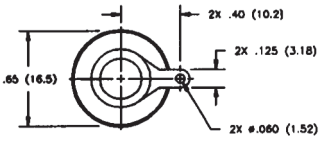

Product Facts for K43P

- **High power rating; 24 Amps DC continuous current carry**
- **Vacuum dielectric for power switching low current loads**
- **Low power consumption**
- **Fast operating: 5 millisecond operate time**
- **Meets requirements of MIL-R-83725**

KILOVAC K43R Make & Break Load Switching

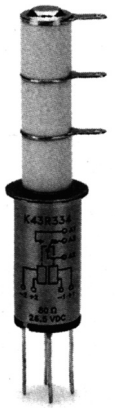

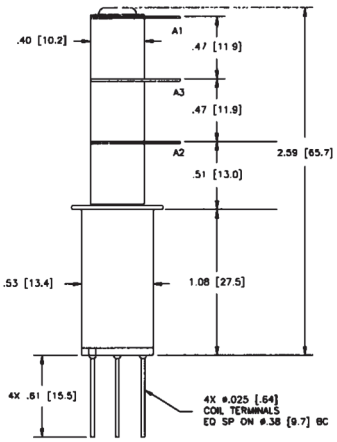

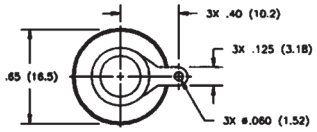

Product Facts for K43R

- **Single pole, double throw contacts with latching actuator**
- **Vacuum dielectric for power switching low current loads**
- **Carries 6 Amps at 32 MHz**
- **Meets requirements of MIL-R-83725**

Product Specifications for K43P and K43R

Contact Arrangement —
K43P — SPST-Latching
K43R — SPDT-Latching

Contact Form —
K43P — P
K43R — R

Test Voltage, DC or 60 Hz (Peak) — 11 kV

Rated Operating Voltage (Peak) —
DC or 60 Hz — 10 kV
2.5 MHz — 7 kV
16 MHz — 6 kV
32 MHz — 4 kV

Continuous Carry Current, Max. —
DC or 60 Hz — 24 A
2.5 MHz — 16 A
16 MHz — 9 A
32 MHz — 6 A
Coil Hi-Pot (Vrms, 60 Hz) — 500 A

Contact Capacitance —
Between Open Contacts — 1.2 pF
Open Contacts to Ground — 1.2 pF

For factory-direct application assistance, dial 800-253-4560, ext. 2055, or 805-220-2055.

Contact Resistance, Max. — 0.02 ohm

Operate Time, Max. —
K43P — 5 ms
K43R — 6 ms

Release Time, Max. — N/A

Shock, 11ms, 1/2 Sine (Peak) — 30 g

Vibration —
Peak — 7 g (55 to 2000 Hz)

Operating Ambient Temperature Range — -55°C to +125°C

Mechanical Life — 1 million cycles

Weight, Nominal —
28.35 g (1 oz.)

***See page 7-87 for mounting methods.**

Coil Data

Volts, Nominal	26.5 Vdc
Latch & Reset, Max.	16 Vdc
Dropout	N/A
Coil Resistance (±10%)	80 Ω

Ratings listed are for 25°C, sea level conditions

Ordering Information

Sample Part Number ▶ **K43 P 3 3 4**

Series:

Contact Form:
P = SPST-Latching R = SPDT-Latching

Coil Voltage:
3 = 26.5 Vdc, Bus Wire

High Voltage Connections:
3 = Solder Connection

Mounting:
2 = Flanged 4 = Standard

Catalog 5-1773450-5
Revised 3-13

www.te.com

Dimensions are shown for reference purposes only. Specifications subject to change.

Dimensions are in millimeters unless otherwise specified.

USA: +1 800 522 6752
Asia Pacific: +86 0 400 820 6015
UK: +44 800 267 666

For additional support numbers please visit www.te.com

H-14/16 Series Make & Break Load Switching — 12 kV Relays

H-14
Product Facts for H-14

- **Double pole, double throw contacts**
- **Vacuum dielectric for power switching low current loads**
- **30 Amps DC continuous current rating**
- **Corona shield high voltage terminals available**
- **Meets requirements of MIL-R-83725**

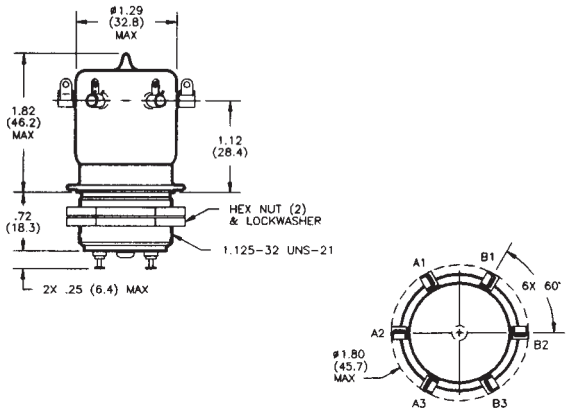

H-16
Product Facts for H-16

- **12 kV rating; isolates 5 kV at 32 MHz**
- **Vacuum dielectric for power switching low current loads**
- **Double pole, double throw contacts**
- **Widely used as a transmit/receive switch**
- **Meets requirements of MIL-R-83725**

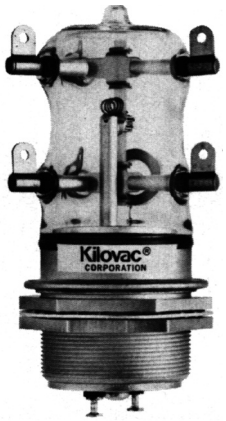

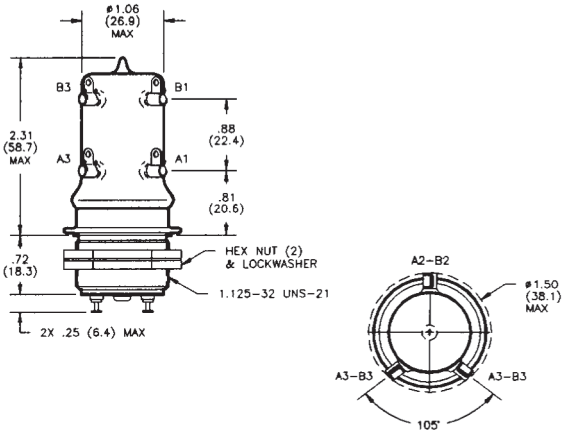

Product Specifications for H-14 and H-16

Contact Arrangement — DPDT

Contact Form — 2C

Test Voltage, DC or 60 Hz (Peak) — 15 kV

Rated Operating Voltage (Peak) —
DC or 60 Hz — 12 kV
2.5 MHz — 10 kV
16 MHz — 8 kV
32 MHz — 5 kV

Continuous Carry Current, Max. —
DC or 60 Hz — 30 A
2.5 MHz — H-14 — 15 A
H-16 — 10 A
16 MHz — H-14 — 10 A
H-16 — 6 A
32 MHz — H-14 — 8 A
H-16 — 4 A
Coil Hi-Pot (Vrms, 60 Hz) — 500 A

For factory-direct application assistance, dial 800-253-4560, ext. 2055, or 805-220-2055.

Contact Capacitance —
Between Open Contacts — 1 pF
Open Contacts to Ground — 2.5 pF

Contact Resistance, Max. —
H-14 — 0.015 ohm
H-16 — 0.03 ohm

Operate Time, Max. — 20 ms

Release Time, Max. — 20 ms

Shock, 11ms, 1/2 Sine (Peak) — 20 g

Vibration —
Peak — 10 g (55 to 500 Hz)

Operating Ambient Temperature Range — -55°C to +125°C

Mechanical Life (Operations x 10^6) —
H-14 — 1 million cycles
H-16 — 500,000 cycles

Weight, Nominal —
H-14 — 226.8 g (8 oz.)
H-16 — 170.1 g (6 oz.)

Coil Data

Nominal Volts DC	12 Vdc	26.5 Vdc	115 Vdc
Pickup, Max.	8 Vdc	16 Vdc	80 Vdc
Dropout	.5-5 Vdc	1-10 Vdc	5-50 Vdc
Coil Resistance (±10%)	24 Ω	120 Ω	2000 Ω

Ratings listed are for 25°C, sea level conditions

Ordering Information

Sample Part Number ▶ **H- 14 /12Vdc**

Series:

Model:
14 16

Coil Voltage:
Blank = 26.5 Vdc
/12Vdc = 12 Vdc
/115Vdc = 115 Vdc

Catalog 5-1773450-5
Revised 3-13

www.te.com

Dimensions are shown for reference purposes only. Specifications subject to change.

Dimensions are in millimeters unless otherwise specified.

USA: +1 800 522 6752
Asia Pacific: +86 0 400 820 6015
UK: +44 800 267 666

For additional support numbers please visit www.te.com

H-8 Make & Break Load Switching — 15 kV Relays

Product Facts

- **Single pole, double throw contacts**
- **Vacuum dielectric for power switching low current loads**
- **30 Amps DC continuous current rating**
- **Corona shield high voltage terminals available**
- **Meets requirements of MIL-R-83725**

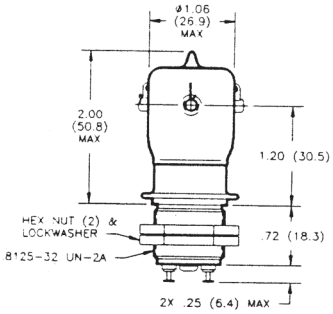

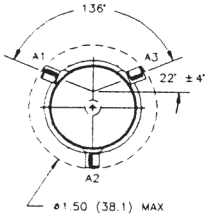

Product Specifications

Contact Arrangement — SPDT

Contact Form — C

Test Voltage, DC or 60 Hz (Peak) — 20 kV

Rated Operating Voltage (Peak) —
DC or 60 Hz — 15 kV
2.5 MHz — 12 kV
16 MHz — 10 kV
32 MHz — 5 kV

Continuous Carry Current, Max. —
DC or 60 Hz — 15 A RMS
2.5 MHz — 10 A RMS
16 MHz — 6 A RMS
32 MHz — 4 A RMS
Coil Hi-Pot (Vrms, 60 Hz) — 500 A RMS

Contact Capacitance —
Between Open Contacts — 1 pF
Open Contacts to Ground — 1.5 pF

Contact Resistance, Max. — 0.015 ohm

Operate Time, Max. — 15 ms

Release Time, Max. — 15 ms

Shock, 11ms, 1/2 Sine (Peak) — 30 g

Vibration —
Peak — 10 g (55 to 500 Hz)

Operating Temperature Range — -55°C to +125°C

Mechanical Life — 1 million cycles

Weight, Nominal —
85 g (3 oz.)

Coil Data

Volts, Nominal DC	12 V	26.5 V	115 V
Pickup, Max.	8 Vdc	16 Vdc	80 Vdc
Dropout	.5-5 Vdc	1-10 Vdc	5-50 Vdc
Coil Resistance (±10%)	60 Ω	265 Ω	3500 Ω

For factory-direct application assistance, dial 800-253-4560, ext. 2055, or 805-220-2055.

Dimensions are shown for reference purposes only. Specifications subject to change.

Dimensions are in millimeters unless otherwise specified.

USA: +1 800 522 6752
Asia Pacific: +86 0 400 820 6015
UK: +44 800 267 666

For additional support numbers please visit www.te.com

KC Series Make & Break Load Switching — 15 kV Relays

KC-14

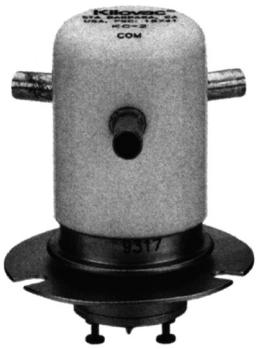

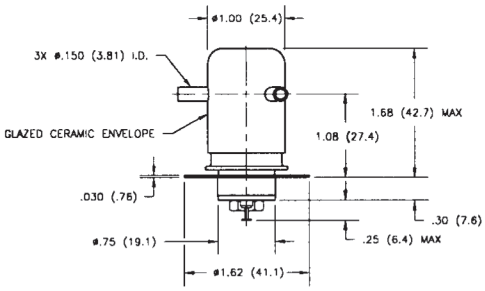

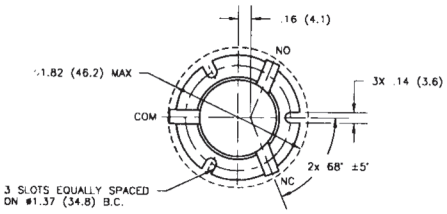

KC-18

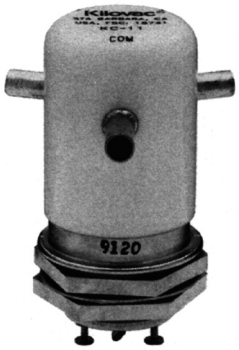

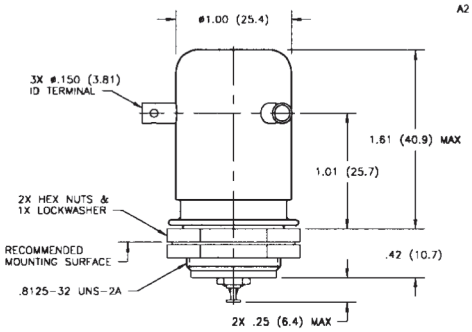

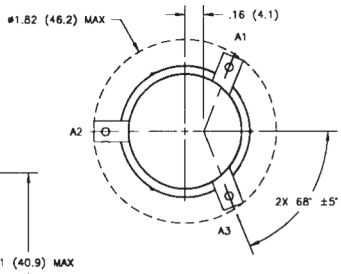

Product Facts for KC-14 and KC-18

- **Specifically designed for load switching applications**
- **Can power switch and isolate loads**
- **Replaces KILOVAC KC-8 and KC-12**
- **Meets requirements of MIL-R-83725**

*Hot Switching, Resistive Load Life

Voltage	Current	Load Life Operations
330 Vdc	17 Amps	10,000
330 Vdc	5 Amps	100,000
5,000 Vdc	2 Amps	100,000
10,000 Vdc	1 Amps	50,000

*Ratings are for normally open contacts only. No testing has been performed on normally closed contacts.

Product Specifications for KC-14 and KC-18

Contact Arrangement — SPDT

Contact Form — C

Test Voltage, DC or 60 Hz (Peak) — 17 kV

Rated Operating Voltage (Peak) — DC or 60 Hz — 15 kV

Continuous Carry Current, Max. — DC or 60 Hz — 30 A
Coil Hi-Pot (Vrms, 60 Hz) — 500 A

Contact Capacitance —
Between Open Contacts — 0.5 pF
Open Contacts to Ground — 1 pF

Contact Resistance, Max. — 0.025 ohm

Operate Time, Max. — 15 ms

Release Time, Max. — 9 ms

For factory-direct application assistance, dial 800-253-4560, ext. 2055, or 805-220-2055.

Shock, 11ms, 1/2 Sine (Peak) — 50 g

Vibration —
Peak — 10 g (55 to 500 Hz)

Operating Ambient Temperature Range — -55°C to +125°C

Mechanical Life — 1 million cycles

Weight, Nominal — 85 g (3 oz.)

Coil Data

Volts, Nominal DC	12 V	26.5 V	115 V
Pickup, Max.	8 Vdc	16 Vdc	80 Vdc
Dropout	.5-5 Vdc	1-10 Vdc	5-50 Vdc
Coil Resistance (±10%)	48 Ω	180 Ω	2900 Ω

Ratings listed are for 25°C, sea level conditions

Ordering Information

Sample Part Number ▶ **KC- 18 /12Vdc**

Series:

Model:
14 18

Coil Voltage:
Blank = 26.5 Vdc /12Vdc = 12 Vdc /115Vdc = 115 Vdc

Catalog 5-1773450-5
Revised 3-13

www.te.com

Dimensions are shown for reference purposes only. Specifications subject to change.

Dimensions are in millimeters unless otherwise specified.

USA: +1 800 522 6752
Asia Pacific: +86 0 400 820 6015
UK: +44 800 267 666

For additional support numbers please visit www.te.com

KC Series Make & Break Load Switching — 15 kV Relays (Continued)

KC-2
No Load Switching

Product Facts

- **Vacuum dielectric for low and stable contact resistance**
- **Carries 50 Amps at DC; 10 Amps at 32 MHz**
- **Not designed for power switching**

KC-8

Product Facts for KC-8

- **Not recommended for new design. See KC-14 on page 7-82 for replacement.**

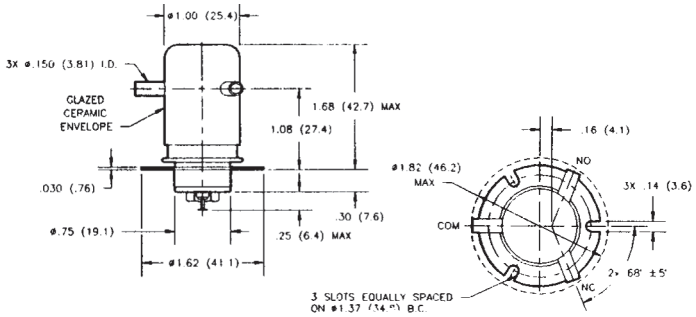

KC-11
No Load Switching

Product Facts

- **Threaded base version of KC-2**
- **Vacuum dielectric for low leakage current applications**

KC-12
Product Facts

- **Not recommended for new design. See KC-18 on page 7-67 for replacement.**
- **Vacuum dielectric for power switching low current loads**

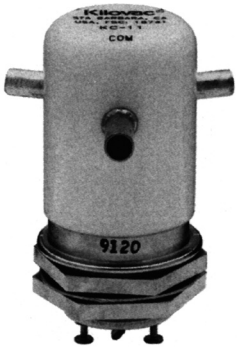

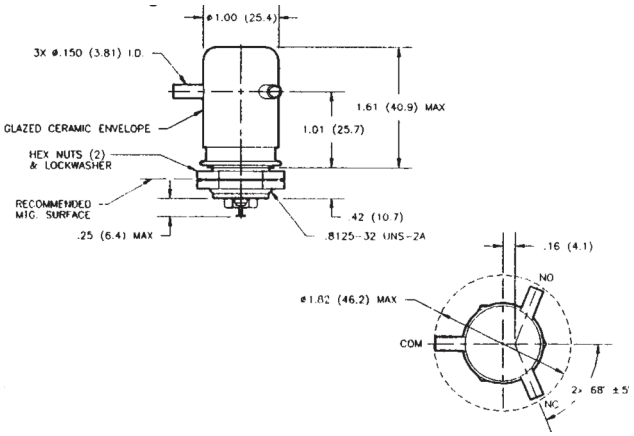

Product Specifications for KC-2, KC-8, KC-11 and KC-12

Contact Arrangement — SPDT

Contact Form — C

Test Voltage, DC or 60 Hz (Peak) — 17 kV

Rated Operating Voltage (Peak) —
DC or 60 Hz — 15 kV
2.5 MHz — KC-2 and KC-11 — 12 kV
16 MHz — KC-2 and KC-11 — 9 kV
32 MHz — KC-2 and KC-11 — 7 kV

Continuous Carry Current, Max. —
DC or 60 Hz — KC-2 and KC-11 — 50 A
KC-8 and KC-12 — 30 A
2.5 MHz — KC-2 and KC-11 — 30 A
16 MHz — KC-2 and KC-11 — 17 A
32 MHz — KC-2 and KC-11 — 10 A
Coil Hi-Pot (Vrms, 60 Hz) — 500 A

For factory-direct application assistance, dial 800-253-4560, ext. 2055, or 805-220-2055.

Contact Capacitance —
Between Open Contacts — 0.5 pF
Open Contacts to Ground — 1 pF

Contact Resistance, Max. —
KC-2 and KC-11 — 0.012 ohm
KC-8 and KC-12 — 0.025 ohm

Operate Time, Max. — 15 ms

Release Time, Max. — 9 ms

Shock, 11ms, 1/2 Sine (Peak) — 50 g

Vibration —
Peak — 10 g (55 to 500 Hz)

Operating Ambient Temperature Range — -55°C to +125°C

Mechanical Life — 1 million cycles

Weight, Nominal —
85 g (3 oz.)

Coil Data

Nominal Volts DC	12 Vdc	26.5 Vdc	115 Vdc
Pickup, Max.	8 Vdc	16 Vdc	80 Vdc
Dropout	.5-5 Vdc	1-10 Vdc	5-50 Vdc
Coil Resistance (±10%)			
KC-2 and KC-11	60 Ω	250 Ω	3500 Ω
KC-8 and KC-12	48 Ω	180 Ω	2900 Ω

Ratings listed are for 25°C, sea level conditions

Ordering Information

Sample Part Number ▶ **KC- 2 /12Vdc**

Series:

Model:
2 8 11 12

Coil Voltage:
Blank = 26.5 Vdc /12Vdc = 12 Vdc /115Vdc = 115 Vdc

Catalog 5-1773450-5
Revised 3-13

www.te.com

Dimensions are shown for reference purposes only. Specifications subject to change.

Dimensions are in millimeters unless otherwise specified.

USA: +1 800 522 6752
Asia Pacific: +86 0 400 820 6015
UK: +44 800 267 666

For additional support numbers please visit www.te.com

KC Series Make Only Load Switching — 15 kV Relays (Continued)

KC-15
Product Facts

- **SF-6 gas-filled for power switching on the "make"**
- **Long load life in capacitive discharge**
- **Recommended for ESD testing and safety interlock applications**
- **Meets requirements of MIL-R-83725**

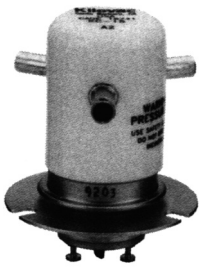

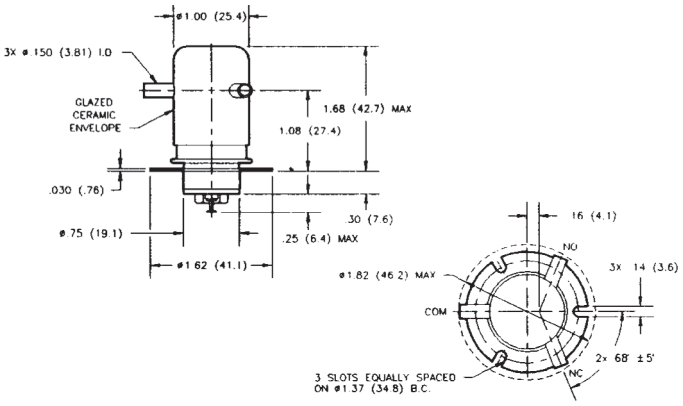

KC-16
Product Facts

- **Threaded base version of KC-15**
- **SF-6 gas-filled for power switching on the "make"**
- **15 kV rating**
- **Meets requirements of MIL-R-83725**

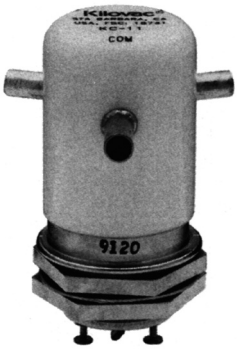

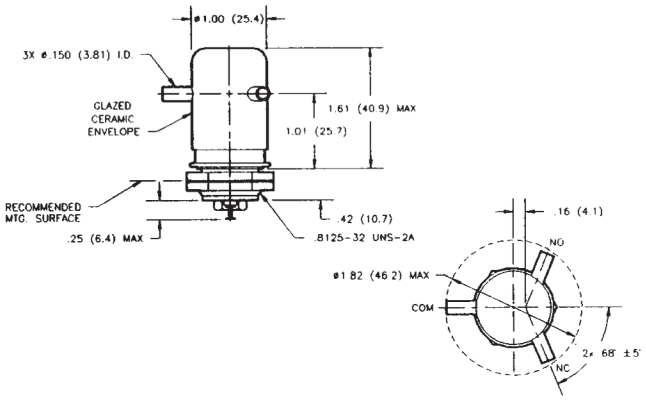

Product Specifications for KC-15 and KC-16

Contact Arrangement — SPDT

Contact Form — C

Test Voltage, DC or 60 Hz (Peak) — 17 kV

Rated Operating Voltage (Peak) — DC or 60 Hz — 15 kV

Continuous Carry Current, Max. — DC or 60 Hz — 12 A
Coil Hi-Pot (Vrms, 60 Hz) — 500 A

Contact Capacitance —
Between Open Contacts — N/A
Open Contacts to Ground — N/A

Contact Resistance, Max. — 1.0 ohm*

Operate Time, Max. — 15 ms

Release Time, Max. — 9 ms

Shock, 11ms, 1/2 Sine (Peak) — 50 g

Vibration —
Peak — 10 g (55 to 500 Hz)

Operating Ambient Temperature Range — -55°C to +125°C

Mechanical Life — 1 million cycles

Weight, Nominal — 85 g (3 oz.)

Note:
*Contact resistance for gas-filled relays measured 28 Vdc, 1 Amp

Coil Data

Volts, Nominal DC	12 V	26.5 V	115 V
Pickup, Max.	8 Vdc	16 Vdc	80 Vdc
Dropout	.5-5 Vdc	1-10 Vdc	5-50 Vdc
Coil Resistance (±10%)	48 Ω	180 Ω	2900 Ω

Ratings listed are for 25°C, sea level conditions

Ordering Information

Sample Part Number ▶ **KC- 15 /12Vdc**

Series:

Model:
15
16

Coil Voltage:
Blank = 26.5 Vdc
/12Vdc = 12 Vdc
/115Vdc = 115 Vdc

For factory-direct application assistance, dial 800-253-4560, ext. 2055, or 805-220-2055.

Catalog 5-1773450-5
Revised 3-13

www.te.com

Dimensions are shown for reference purposes only. Specifications subject to change.

Dimensions are in millimeters unless otherwise specified.

USA: +1 800 522 6752
Asia Pacific: +86 0 400 820 6015
UK: +44 800 267 666

For additional support numbers please visit www.te.com

H-26 Series Make & Break Load Switching — 15 kV Relays

Product Facts

- **Highly reliable four pole double throw relay**
- **Used to switch multiple loads and for polarity reversal**
- **Vacuum dielectric for power switching low current loads**
- **Meets requirements of MIL-R-83725**

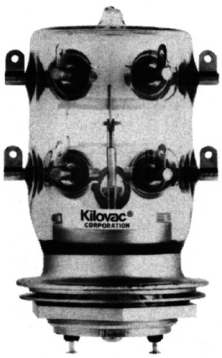

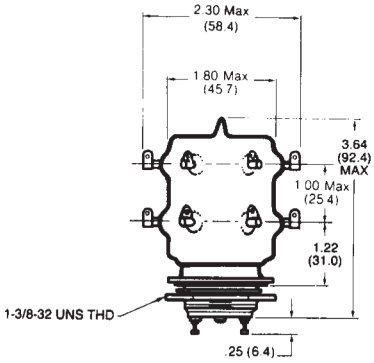

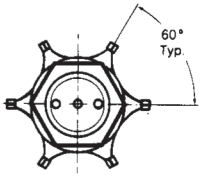

Product Specifications

Contact Arrangement — 4PDT

Contact Form — 4C

Test Voltage, DC or 60 Hz (Peak) — 17 kV

Rated Operating Voltage (Peak) —
DC or 60 Hz — 15 kV
2.5 MHz — 12 kV
16 MHz — 10 kV
32 MHz — 7 kV

Continuous Carry Current, Max. —
DC or 60 Hz — 30 A
2.5 MHz — 10 A
16 MHz — 6 A
32 MHz — 4 A
Coil Hi-Pot (Vrms, 60 Hz) — 500 A

Contact Capacitance —
Between Open Contacts — 1 pF
Open Contacts to Ground — 2.5 pF

Contact Resistance, Max. — 0.02 ohm

Operate Time, Max. — 30 ms

Release Time, Max. — 30 ms

Shock, 11ms, 1/2 Sine (Peak) — 30 g

Vibration —
Peak — 10 g (55 to 500 Hz)

Operating Ambient Temperature Range — -55°C to +125°C

Mechanical Life — 100,000 cycles

Weight, Nominal — 340 g (12 oz.)

Coil Data

Volts, Nominal DC	12 V	26.5 V	115 V
Pickup, Max.	8 Vdc	16 Vdc	80 Vdc
Dropout	.5-5 Vdc	1-10 Vdc	5-50 Vdc
Coil Resistance (±10%)	N/A	130 Ω	2100 Ω

Ratings listed are for 25°C, sea level conditions

Ordering Information

Sample Part Number ▶ **H-26 /12Vdc**

Model:
H-26

Coil Voltage:
Blank = 26.5 Vdc
/12Vdc = 12 Vdc
/115Vdc = 115 Vdc

For factory-direct application assistance, dial 800-253-4560, ext. 2055, or 805-220-2055.

Catalog 5-1773450-5
Revised 3-13

www.te.com

Dimensions are shown for reference purposes only. Specifications subject to change.

Dimensions are in millimeters unless otherwise specified.

USA: +1 800 522 6752
Asia Pacific: +86 0 400 820 6015
UK: +44 800 267 666

For additional support numbers please visit www.te.com

H-19/17 Series Make & Break Load Switching — 20/25 kV Relays

H-19
Product Facts

- **20 kV operating voltage**
- **Vacuum dielectric and tungsten contacts for power switching low current loads**
- **Double pole, double throw contacts**
- **Available with corona shield connectors**
- **Meets requirements of MIL-R-83725**

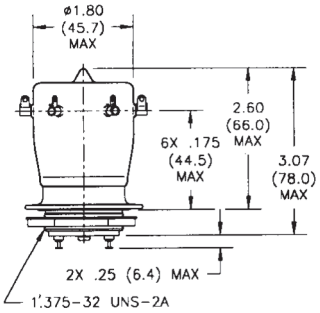

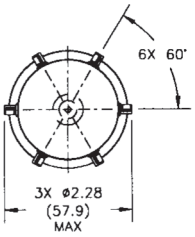

H-17
Product Facts

- **Will isolate 12 kV at 32 MHz**
- **Tungsten contacts suitable for power switching low current loads**
- **Available with corona shield connectors**
- **Meets requirements of MIL-R-83725**
- **QPL version available, M83725/2**

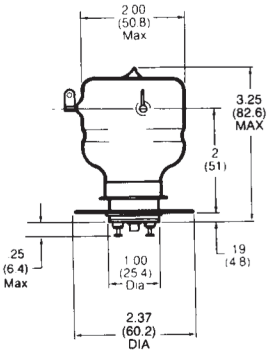

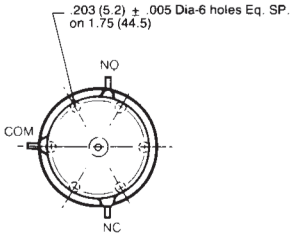

Product Specifications for H-19 and H-17

Contact Arrangement —
H-19 — DPDT
H-17 — SPDT

Contact Form —
H-19 — 2C
H-17 — C

Test Voltage, DC or 60 Hz (Peak) —
H-19 — 25 kV
H-17 — 30 kV

Rated Operating Voltage (Peak) —
DC or 60 Hz — H-19 — 20 kV
H-17 — 25 kV
2.5 MHz — H-19 — 15 kV
H-17 — 20 kV
16 MHz — H-19 — 10 kV
H-17 — 15 kV
32 MHz — H-19 — 7 kV
H-17 — 12 kV

Continuous Carry Current, Max. —
DC or 60 Hz — 30 A
2.5 MHz — H-19 — 18 A
H-17 — 16 A
16 MHz — H-19 — 9 A
H-17 — 10 A
32 MHz — H-19 — 6 A
H-17 — 8 A
Coil Hi-Pot (Vrms, 60 Hz) — 500 A

Contact Capacitance —
Between Open Contacts — 1 pF
Open Contacts to Ground — 2.5 pF

Contact Resistance, Max. —
0.015 ohm

Operate Time, Max. —
H-19 — 30 ms
H-17 — 25 ms

Release Time, Max. —
H-19 — 20 ms
H-17 — 25 ms

Shock, 11ms, 1/2 Sine (Peak) —
H-19 — 30 g
H-17 — 20 g

Vibration —
Peak — 10 g (55 to 500 Hz)

Operating Ambient Temperature Range — -55°C to +125°C

Mechanical Life — 1 million cycles

Weight, Nominal —
H-19 — 241 g (8.5 oz.)
H-17 — 198.4 g (7 oz.)

For factory-direct application assistance, dial 800-253-4560, ext. 2055, or 805-220-2055.

Coil Data

Nominal Volts DC	12 Vdc	26.5 Vdc	115 Vdc
Pickup, Max.	8 Vdc	16 Vdc	80 Vdc
Dropout	.5-5 Vdc	1-10 Vdc	5-50 Vdc
Coil Resistance (±10%)			
H-19	48 Ω	225 Ω	2100 Ω
H-17	24 Ω	120 Ω	2900 Ω

Ratings listed are for 25°C, sea level conditions

Ordering Information

Sample Part Number ▶ **H- 17 /12Vdc**

Series:

Model:
H-19
H-17

Coil Voltage:
Blank = 26.5 Vdc
/12Vdc = 12 Vdc
/115Vdc = 115 Vdc

Catalog 5-1773450-5
Revised 3-13

www.te.com

Dimensions are shown for reference purposes only. Specifications subject to change.

Dimensions are in millimeters unless otherwise specified.

USA: +1 800 522 6752
Asia Pacific: +86 0 400 820 6015
UK: +44 800 267 666

For additional support numbers please visit www.te.com

K62 Series Make & Break Load Switching — 25 kV Relays

K62A and K62B Product Facts

- **25 kV relay with flying leads for ease of installation**
- **Vacuum dielectric and tungsten contacts for power switching low current loads**
- **Meets requirements of MIL-R-83725**

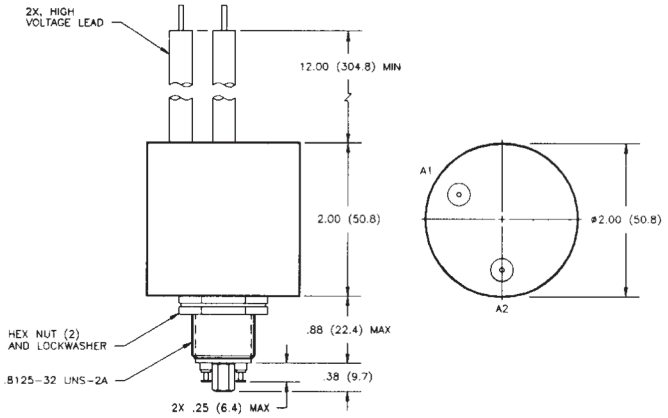

K62C Product Facts

- **SPDT version of K62**
- **Vacuum dielectric for power switching low current loads**
- **Carries 18 Amps continuous current**
- **Meets requirements of MIL-R-83725**

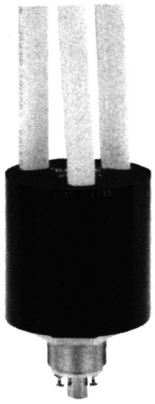

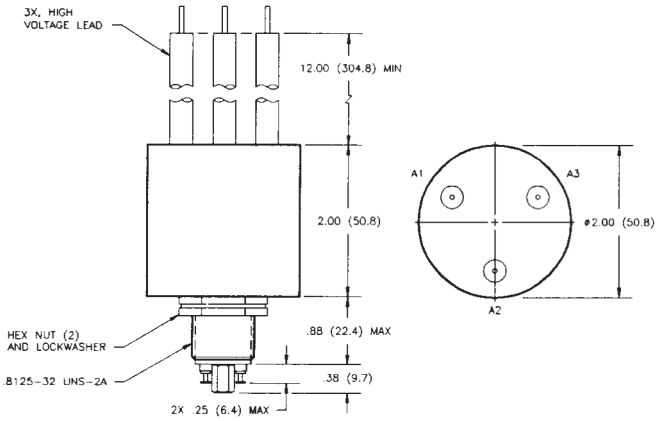

Product Specifications for K62A, K62B and K62C

Contact Arrangement —
K62A — SPST-NO
K62B — STST-NC
K62C — SPDT

Contact Form —
K62A — A
K62B — B
K62C — C

Test Voltage, DC or 60 Hz (Peak) — 30 kV

Rated Operating Voltage (Peak) — DC or 60 Hz — 25 kV

Continuous Carry Current, Max. — DC or 60 Hz — 18 A
Coil Hi-Pot (Vrms, 60 Hz) — 500 A

Contact Resistance, Max. — 0.50 ohm

Operate Time, Max. — 15 ms

Release Time, Max. — 15 ms

Shock, 11ms, 1/2 Sine (Peak) — 20 g

Vibration —
Peak — 10 g (55 to 500 Hz)

Operating Ambient Temperature Range — -55°C to +85°C

Mechanical Life — 1 million cycles

Weight, Nominal — 340 g (12 oz.)

For factory-direct application assistance, dial 800-253-4560, ext. 2055, or 805-220-2055.

Coil Data

Volts, Nominal DC	12 V	26.5 V	115 V
Pickup, Max.	9 Vdc	18 Vdc	90 Vdc
Dropout	.5-5 Vdc	1-10 Vdc	5-55 Vdc
Coil Resistance (±10%)	30 Ω	125 Ω	2400 Ω

Ratings listed are for 25°C, sea level conditions

Ordering Information

Sample Part Number ▶ **K62 A 7 4 1**

Series:

Contact Form:
A = SPST-NO B = SPST-NC C = SPDT

Coil Voltage:
7 = 12 Vdc, Turret Terminal
8 = 26.5 Vdc, Turret Terminal
9 = 115 Vdc, Turret Terminal

High Voltage Connections:
4 = Flying Leads, 12"
7 = Flying Leads, 72"
8 = Flying Leads, 36"

Mounting:
1 = Threaded

Catalog 5-1773450-5
Revised 3-13

www.te.com

Dimensions are shown for reference purposes only. Specifications subject to change.

Dimensions are in millimeters unless otherwise specified.

USA: +1 800 522 6752
Asia Pacific: +86 0 400 820 6015
UK: +44 800 267 666

For additional support numbers please visit www.te.com

KC-Series No Load Switching — 25 kV Relays

KC-20
Product Facts

- **Rugged, high current carry ceramic relay**
- **Carries 30 Amps at 32 MHz**
- **Copper contacts; not designed for power switching**
- **Meets requirements of MIL-R-83725**

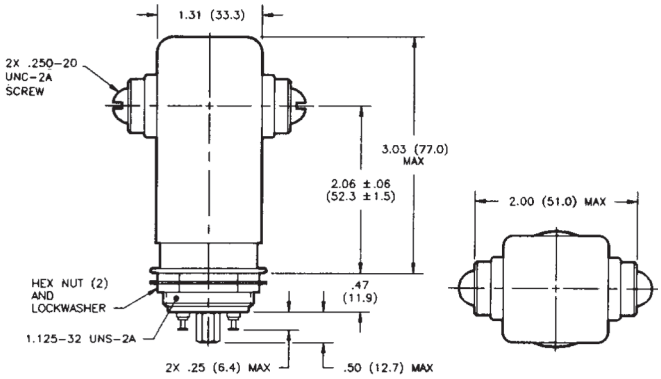

KC-30
Product Facts

- **Normally closed version of KC-20**
- **Carries 55 Amps DC**
- **Vacuum dielectric for low leakage current applications**

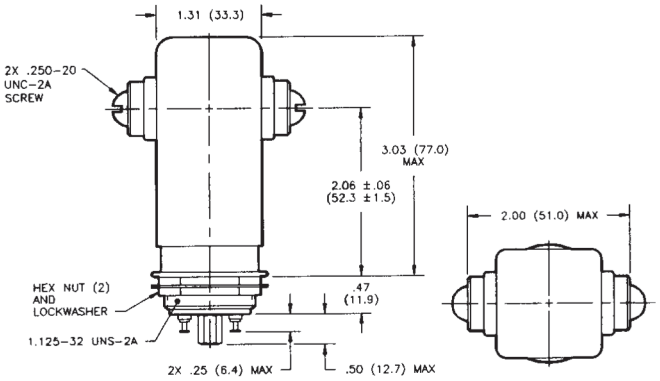

Product Specifications for KC-20 and KC-30

Contact Arrangement —
KC-20 — SPST-NO
KC-30 — SPST-NC

Contact Form —
KC-20 — X
KC-30 — Y

Test Voltage, DC or 60 Hz (Peak) —
KC-20 — 30 kV
KC-30 — 28 kV

Rated Operating Voltage (Peak) —
DC or 60 Hz — KC-20 — 28 kV
KC-30 — 25 kV
2.5 MHz — 22 kV
16 MHz — KC-20 — 12 kV
KC-30 — 10 kV
32 MHz — KC-20 — 10 kV
KC-30 — 9 kV

Continuous Carry Current, Max. —
DC or 60 Hz — KC-20 — 110 A
KC-30 — 55 A
2.5 MHz — KC-20 — 60 A
KC-30 — 30 A
16 MHz — KC-20 — 40 A
KC-30 — 20 A
32 MHz — KC-20 — 30 A
KC-30 — 15 A
Coil Hi-Pot (Vrms, 60 Hz) — 500 A

Contact Capacitance —
Between Open Contacts — 2.5 pF
Open Contacts to Ground — 2.5 pF

Contact Resistance, Max. —
KC-20 — 0.005 ohm
KC-30 — 0.01 ohm

Operate Time, Max. — 18 ms

Release Time, Max. —
KC-20 — 10 ms
KC-30 — 20 ms

Shock, 11ms, 1/2 Sine (Peak) — 30 g

Vibration —
Peak — 10 g (55 to 500 Hz)

Operating Ambient Temperature Range — -55°C to +125°C

Mechanical Life — 2 million cycles

Weight, Nominal —
340 g (12 oz.)

For factory-direct application assistance, dial 800-253-4560, ext. 2055, or 805-220-2055.

Coil Data

Volts, Nominal DC	12 V	26.5 V	115 V
Pickup, Max.	8 Vdc	16 Vdc	80 Vdc
Dropout	.5-5 Vdc	1-10 Vdc	5-50 Vdc
Coil Resistance (±10%)	24 Ω	120 Ω	2000 Ω

Ratings listed are for 25°C, sea level conditions

Ordering Information

Sample Part Number ▶ **KC- 20 /12Vdc**

Series:

Model:
KC-20
KC-30

Coil Voltage:
Blank = 26.5 Vdc
/12Vdc = 12 Vdc
/115Vdc = 115 Vdc

Catalog 5-1773450-5
Revised 3-13

www.te.com

Dimensions are shown for reference purposes only. Specifications subject to change.

Dimensions are in millimeters unless otherwise specified.

USA: +1 800 522 6752
Asia Pacific: +86 0 400 820 6015
UK: +44 800 267 666

For additional support numbers please visit www.te.com

KC-Series — 25 kV Relays

KC-22, KC-32
Make & Break Load Switching

Product Facts for KC-22

- Tungsten contacts for power switching

Product Facts for KC-32

- Normally closed version of KC-22
- Vacuum dielectric for power switching low current loads

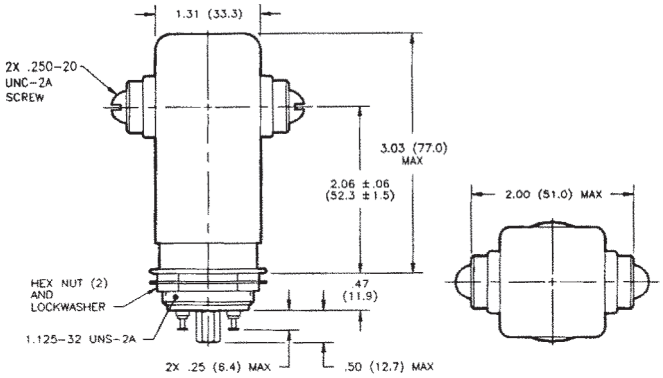

KC-28, KC-38
Make Only Load Switching

Product Facts for KC-28

- SF-6 gas-filled for capacitive discharge and "make only" applications
- Capable of switching 2000 Amps peak capacitive discharge for 400 nanoseconds

Product Facts for KC-38

- Normally closed version of KC-28
- SF-6 gas-filled for capacitive discharge and "make only" applications

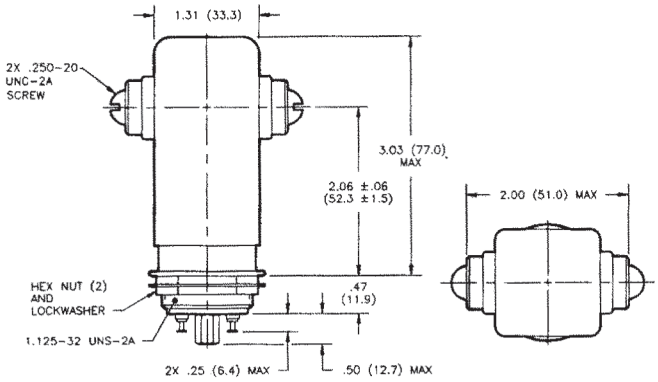

Product Specifications for KC-22, KC-32, KC-28 & KC-38

Contact Arrangement —
KC-22 and KC-28 — SPST-NO
KC-32 and KC-38 — SPST-NC

Contact Form —
KC-22 and KC-28 — X
KC-32 and KC-38 — Y

Test Voltage, DC or 60 Hz (Peak) — 28 kV

Rated Operating Voltage (Peak) — DC or 60 Hz — 25 kV

Continuous Carry Current, Max. —
DC or 60 Hz — KC-22 — 65 A
KC-33 — 45 A
KC-28 — 30 A
KC-38 — 15 A
Coil Hi-Pot (Vrms, 60 Hz) — 500 A

Contact Capacitance —
Between Open Contacts —
KC-22 and KC-32 — 2.5 pF
Open Contacts to Ground —
KC-22 and KC-32 — 2.5 pF

Contact Resistance, Max. —
KC-22 — 0.005 ohm
KC-33 — 0.01 ohm
KC-28 — 1.0 ohm*
KC-38 — 1.0 ohm*

Operate Time, Max. — 18 ms

Release Time, Max. —
KC-22 and KC-28 — 10 ms
KC32 and KC-38 — 20 ms

Shock, 11ms, 1/2 Sine (Peak) — 30 g

Vibration —
Peak — 10 g (55 to 500 Hz)

Operating Ambient Temperature Range — -55°C to +125°C

Mechanical Life — 2 million cycles

Weight, Nominal — 340 g (12 oz.)

Coil Data

Volts, Nominal DC	12 V	26.5 V	115 V
Pickup, Max.	8 Vdc	16 Vdc	80 Vdc
Dropout	.5-5 Vdc	1-10 Vdc	5-50 Vdc
Coil Resistance (±10%)	24 Ω	120 Ω	2000 Ω

Ratings listed are for 25°C, sea level conditions

For factory-direct application assistance, dial 800-253-4560, ext. 2055, or 805-220-2055.

Ordering Information

Sample Part Number ▶ **KC- 22 /12Vdc**

Series:

Model:
KC-22 KC-32 KC-28 KC-38

Coil Voltage:
Blank = 26.5 Vdc /12Vdc = 12 Vdc /115Vdc = 115 Vdc

Catalog 5-1773450-5
Revised 3-13

www.te.com

Dimensions are shown for reference purposes only. Specifications subject to change.

Dimensions are in millimeters unless otherwise specified.

USA: +1 800 522 6752
Asia Pacific: +86 0 400 820 6015
UK: +44 800 267 666

For additional support numbers please visit www.te.com

H-23/24 Series Make & Break Load Switching — 30 kV Relay

(Not recommended for new designs)

Product Facts

- **See K61 or K62 series for latest generation products**
- **Vacuum dielectric for power switching low current loads**

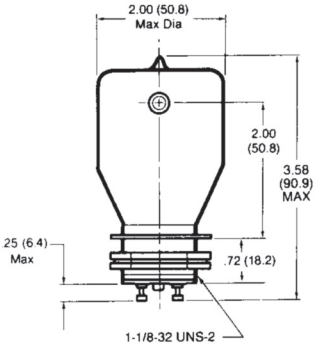

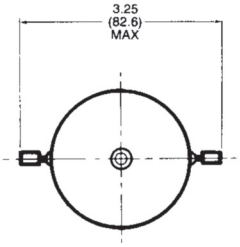

Product Specifications

Contact Arrangement —
H-23 — SPST-NC
H-24 — SPST-NO

Contact Form —
H-23 — B
H-24 — A

Test Voltage, DC or 60 Hz (Peak) — 35 kV

Rated Operating Voltage (Peak) —
DC or 60 Hz — 30 kV
2.5 MHz — 24 kV
16 MHz — 18 kV
32 MHz — 7 kV

Continuous Carry Current, Max. —
DC or 60 Hz — 30 A
2.5 MHz — 20 A
16 MHz — 12 A
32 MHz — 7 A
Coil Hi-Pot (Vrms, 60 Hz) — 500 A

Contact Capacitance —
Between Open Contacts — N/A
Open Contacts to Ground — N/A

Contact Resistance, Max. — 0.015 ohm

Operate Time, Max. — 30 ms

Release Time, Max. — 20 ms

Shock, 11ms, 1/2 Sine (Peak) — 20 g

Vibration —
Peak — 10 g (55 to 500 Hz)

Operating Ambient Temperature Range — -55°C to +125°C

Mechanical Life — 1 million cycles

Weight, Nominal — 198.4 g (7 oz.)

Coil Data

Volts, Nominal DC	12 V	26.5 V	115 V
Pickup, Max.	8 Vdc	16 Vdc	80 Vdc
Dropout	.5-5 Vdc	1-10 Vdc	5-50 Vdc
Coil Resistance (±10%)	24	120 Ω	2000 Ω

Ratings listed are for 25°C, sea level conditions

Ordering Information

Sample Part Number ▶ **H- 23 /12Vdc**

Series:

Model:
H-23
H-24

Coil Voltage:
Blank = 26.5 Vdc
/12Vdc = 12 Vdc
/115Vdc = 115 Vdc

For factory-direct application assistance, dial 800-253-4560, ext. 2055, or 805-220-2055.

Catalog 5-1773450-5
Revised 3-13

www.te.com

Dimensions are shown for reference purposes only. Specifications subject to change.

Dimensions are in millimeters unless otherwise specified.

USA: +1 800 522 6752
Asia Pacific: +86 0 400 820 6015
UK: +44 800 267 666

For additional support numbers please visit www.te.com

KP61 Series — 35 kV Relays

Product Facts

- **SF-6 gas-filled relay is excellent for capacitive discharge applications**
- **Widely used in test equipment and medical instruments**
- **Fully operable in air and suitable for adverse environments**
- **Contact forms A, B & C**
- **35 kV rating in compact, durable package**
- **Lower cost version of K61 series**

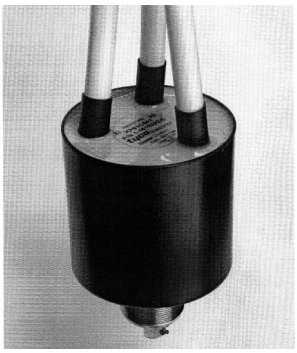

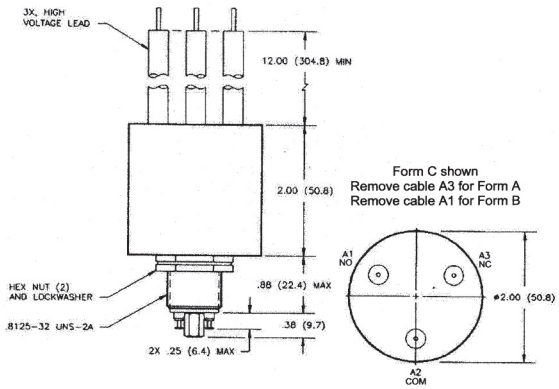

Dimensions in Inches
Tolerances Except as Noted
.xx = ± .03
.xxx = ± .010
∠x° = ± 5°
DO NOT SCALE DWG.

Product Specifications

Contact Arrangement/Form —
SPST-NO / A
SPST-NC / B
SPDT / C

Test Voltage, DC or 60 Hz (Peak) — 40 kV

Rated Operating Voltage (Peak) — DC or 60 Hz — 35 V

Continuous Carry Current, Max. — DC or 60 Hz — 10 A

Contact Resistance, Max. — 1.0Ω

Shock, 11ms, 1/2 Sine (Peak) — 20 g

Vibration —
Peak — 10 g (55 to 500 Hz)

Operating Ambient Temperature Range — -55°C to +85°C

Mechanical Life — 1 million cycles

Weight, Nominal — 297.7g (10.5 oz.)

Coil Data

Volts, Nominal DC	12 V	26.5 V	115 V
Pickup, Max.	30 Vdc	125 Vdc	2000 Vdc
Dropout	.5-5 Vdc	1-10 Vdc	5-50 Vdc
Coil Resistance (±10%)	24	120 Ω	2000 Ω

Ratings listed are for 25°C, sea level conditions

Ordering Information

Sample Part Number ▶ **K61 C 8 4 1**

Series:

Contact Form:
A = SPST-NO B = SPST-NC C = SPDT

Coil Voltage:
7 = 12 Vdc, Turret Terminal
8 = 26.5 Vdc, Turret Terminal
9 = 115 Vdc, Turret Terminal

High Voltage Connections:
4 = Flying Leads, 12"
5 = Flying Leads, 72"
6 = Flying Leads, 36"

Mounting:
1 = Threaded

For factory-direct application assistance, dial 800-253-4560, ext. 2055, or 805-220-2055.

Catalog 5-1773450-5
Revised 3-13

www.te.com

Dimensions are shown for reference purposes only. Specifications subject to change.

Dimensions are in millimeters unless otherwise specified.

USA: +1 800 522 6752
Asia Pacific: +86 0 400 820 6015
UK: +44 800 267 666

For additional support numbers please visit www.te.com

K60 Series Make Only Load Switching — 35 kV Relays

K60C (35 kV)* Product Facts

- **35 kV rating when operated in oil or potting**
- **Smallest 35 kV rated relay available**

***Customer must isolate high voltage terminals using suitable dielectric such as oil or potting**

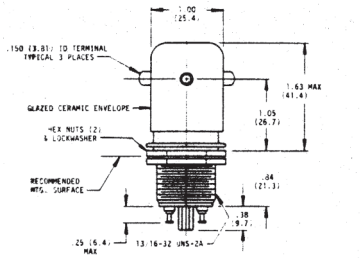

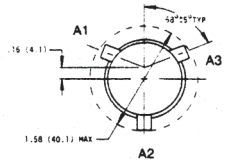

Product Specifications

Contact Arrangement — SPDT

Contact Form — C

Test Voltage, DC or 60 Hz (Peak) — 37 kV**

Rated Operating Voltage (Peak) — DC or 60 Hz — 35 kV**

Continuous Carry Current, Max. — DC or 60 Hz — 10 A RMS
Coil Hi-Pot (Vrms, 60 Hz) — 500 A RMS

Contact Resistance, Max. — N/A

Operate Time, Max. — 15 ms

Release Time, Max. — 15 ms

Shock, 11ms, 1/2 Sine (Peak) — 20 g

Vibration —
Peak — 10 g (55 to 500 Hz)

Operating Ambient Temperature Range — -55°C to +85°C

Mechanical Life — 1 million cycles

Weight, Nominal — 93.6 g (3.3 oz.)

Note:
**37 kV test voltage, 35 kV operate voltage when operated in oil.

Coil Data

Volts, Nominal DC	12 V	26.5 V	115 V
Pickup, Max.	9 Vdc	18 Vdc	90 Vdc
Coil Resistance (±10%)	30 Ω	125 Ω	2400 Ω

Ratings listed are for 20°C, sea level conditions

For factory-direct application assistance, dial 800-253-4560, ext. 2055, or 805-220-2055.

K61 Series Make Only Load Switching — 35 kV Relays

K61A and K61B Product Facts for K61A and K61B

- **SF-6 gas-filled relay excellent for capacitive discharge applications**
- **Widely used in test equipment and medical instruments**
- **Fully operable in air and suitable for adverse environments**

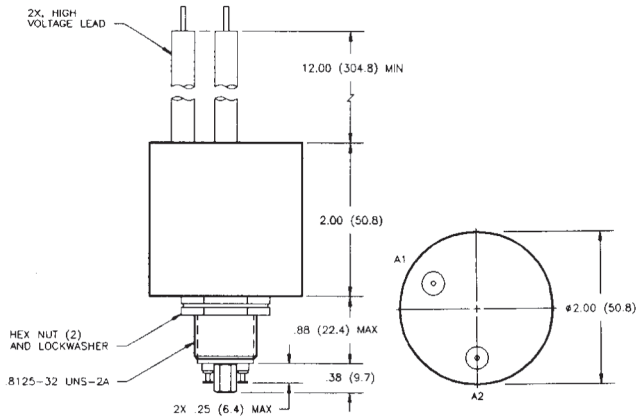

K61C Product Facts for K61C

- **35 kV rating in compact, durable package**
- **SF-6 gas-filled relay excellent for capacitive discharge applications**
- **SPDT version of K61**

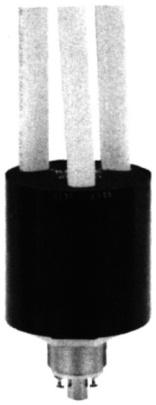

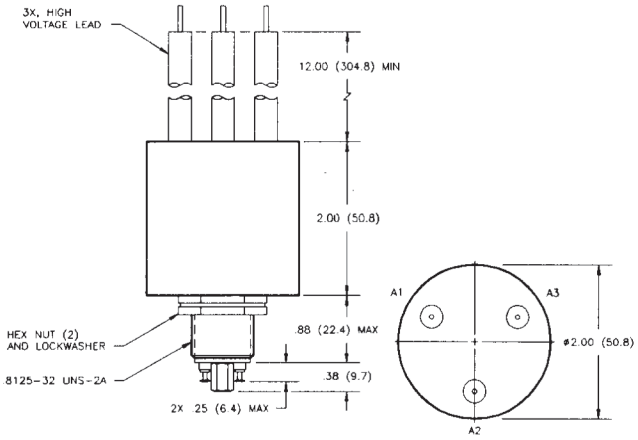

Product Specifications for K61A, K61B and K61C

Contact Arrangement —
K61A — SPST-NO
K61B — STST-NC
K61C — SPDT

Contact Form —
K61A — A
K61B — B
K61C — C

Test Voltage, DC or 60 Hz (Peak) — 40 kV

Rated Operating Voltage (Peak) — DC or 60 Hz — 35 kV

Continuous Carry Current, Max. — DC or 60 Hz — 10 A
Coil Hi-Pot (Vrms, 60 Hz) — 500 A

Contact Resistance, Max. — 1.0 ohm*

Operate Time, Max. — 15 ms

Release Time, Max. — 15 ms

Shock, 11ms, 1/2 Sine (Peak) — 20 g

For factory-direct application assistance, dial 800-253-4560, ext. 2055, or 805-220-2055.

Vibration —
Peak — 10 g (55 to 500 Hz)

Operating Ambient Temperature Range — -55°C to +85°C

Mechanical Life — 1 million cycles

Weight, Nominal — 340 g (12 oz.)

Note:
*Contact resistance for gas-filled relays measured at 28 Vdc, 1 Amp

Coil Data

Volts, Nominal DC	12 V	26.5 V	115 V
Pickup, Max.	9 Vdc	18 Vdc	90 Vdc
Dropout	.5-5 Vdc	1-10 Vdc	5-50 Vdc
Coil Resistance (±10%)	30 Ω	125 Ω	2000 Ω

Ratings listed are for 25°C, sea level conditions

Ordering Information

Sample Part Number ▶ **K61 A 7 4 1**

Series:

Contact Form:
A = SPST-NO B = SPST-NC C = SPDT

Coil Voltage:
7 = 12 Vdc, Turret Terminal
8 = 26.5 Vdc, Turret Terminal
9 = 115 Vdc, Turret Terminal

High Voltage Connections:
4 = Flying Leads, 12"
7 = Flying Leads, 72"
8 = Flying Leads, 36"

Mounting:
1 = Threaded

Catalog 5-1773450-5
Revised 3-13

www.te.com

Dimensions are shown for reference purposes only. Specifications subject to change.

Dimensions are in millimeters unless otherwise specified.

USA: +1 800 522 6752
Asia Pacific: +86 0 400 820 6015
UK: +44 800 267 666

For additional support numbers please visit www.te.com

K64 & H-25 Series — 50 kV Relays

K64C
Make Only Load Switching

Product Facts for K64C

- **SF-6 gas-filled relay ideal for high voltage isolation or "make only" power switching**
- **50 kV rating in compact package**
- **High voltage leads and encapsulation allow full operation in air**

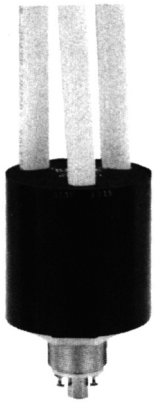

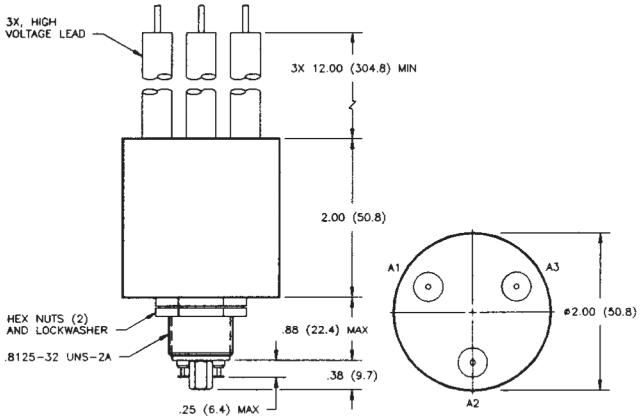

H-25
Make & Break Load Switching

Product Facts for H-25

- **Vacuum relay provides low contact resistance**
- **Vacuum dielectric for power switching low current loads**

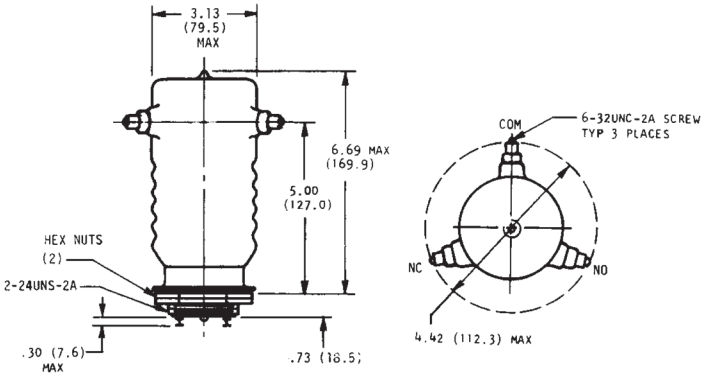

Product Specifications for K64C and H-25

Contact Arrangement — SPDT

Contact Form — C

Test Voltage, DC or 60 Hz (Peak) —
K64C — 55 kV
H-25 — 60 kV

Rated Operating Voltage (Peak) —
DC or 60 Hz — 50 kV

Continuous Carry Current, Max. —
DC or 60 Hz — K64C — 10 A
H-25 — 30 A
Coil Hi-Pot (Vrms, 60 Hz) — 500 A

Contact Resistance, Max. —
K64C — 1.0 ohm*
H-25 — 0.015 ohm

Operate Time, Max. —
K64C — 15 ms
H-25 — 60 ms

Release Time, Max. —
K64C — 15 ms
H-25 — 60 ms

Shock, 11ms, 1/2 Sine (Peak) —
K64C — 10 g
H-25 — 15 g

Vibration —
Peak — 10 g (55 to 500 Hz)

Operating Ambient Temperature Range — -55°C to +85°C

Mechanical Life —
K64C — 1 million cycles
H-25 —500,000 cycles

Weight, Nominal —
K64C — 340 g (12 oz.)
H-25 — 850.5 g (30 oz.)

Note:
*Contact resistance for gas-filled relays measured at 28 Vdc, 1 Amp

For factory-direct application assistance, dial 800-253-4560, ext. 2055, or 805-220-2055.

Coil Data

	K64C	H-25
Nominal Volts DC	**26.5 Vdc**	**26.5 Vdc**
Pickup, Max.	18 Vdc	16 Vdc
Dropout	1-10 Vdc	1-10 Vdc
Coil Resistance (±10%)	80 Ω	120 Ω

Ratings listed are for 25°C, sea level conditions

Ordering Information

Sample Part Number ▶ **K64 C 8 4 1**

Series:

Contact Form:
C = SPDT

Coil Voltage:
8 = 26.5 Vdc, Turret Terminal

High Voltage Connections:
4 = Flying Leads, 12"
7 = Flying Leads, 72"
8 = Flying Leads, 36"

Mounting:
1 = Threaded

Catalog 5-1773450-5
Revised 3-13

www.te.com

Dimensions are shown for reference purposes only. Specifications subject to change.

Dimensions are in millimeters unless otherwise specified.

USA: +1 800 522 6752
Asia Pacific: +86 0 400 820 6015
UK: +44 800 267 666

For additional support numbers please visit www.te.com

K70 Series Make Only Load Switching — 70 kV Relays

K70A and K70B Product Facts

- New, small, compact 70 kV relay package
- SF-6 gas-filled for capacitive discharge and high voltage isolation applications
- Suitable for charging and discharging of high voltage capacitors
- Safe for use in adverse environments

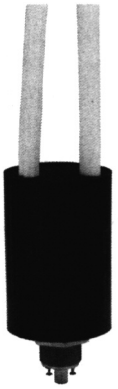

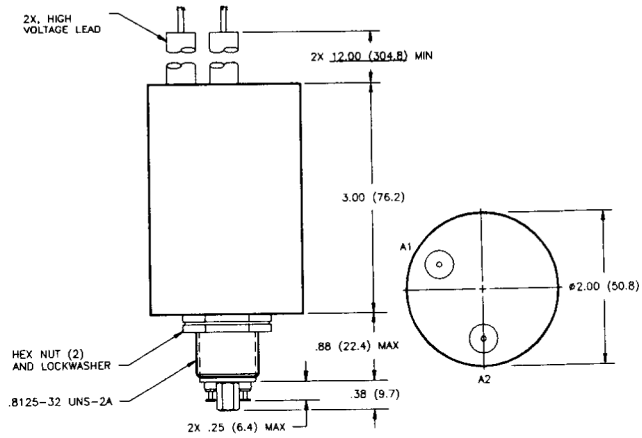

K70C Product Facts

- SPDT version of K70A
- SF-6 gas-filled for capacitive discharge and high voltage isolation applications
- Suitable for charging and discharging of high voltage capacitors

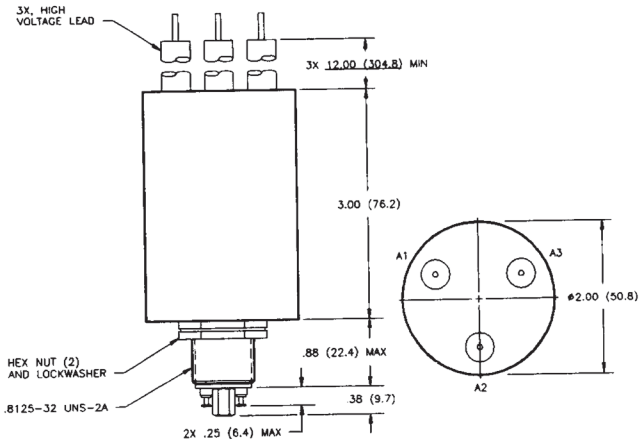

Product Specifications for K70A, K70B and K70C

Contact Arrangement —
K70A — SPST-NO
K70B — SPST-NC
K70C — SPDT

Contact Form —
K70A — A
K70B — B
K70C — C

Test Voltage, DC or 60 Hz (Peak) — 75 kV

Rated Operating Voltage (Peak) —
DC — 70 kV
60 Hz RMS — 30 kV

Continuous Carry Current, Max. —
DC or 60 Hz — 10 A
Coil Hi-Pot (Vrms, 60 Hz) — 500 A

Contact Capacitance —
Between Open Contacts — N/A
Open Contacts to Ground — N/A

Contact Resistance, Max. — 2.0 ohm*

For factory-direct application assistance, dial 800-253-4560, ext. 2055, or 805-220-2055.

Operate Time, Max. — 20 ms

Release Time, Max. — 15 ms

Shock, 11ms, 1/2 Sine (Peak) — 20 g

Vibration —
Peak — 10 g (55 to 500 Hz)

Operating Ambient Temperature Range — 0°C to +85°C

Mechanical Life —500,000 cycles

Weight, Nominal — 510.3 g (18 oz.)

Note:
*Contact resistance for gas-filled relays measured at 28 Vdc, 1 Amp

Coil Data

Volts, Nominal	26.5 Vdc
Pickup, Max.	22 Vdc
Dropout	1-10 Vdc
Coil Resistance (±10%)	75 Ω

Ratings listed are for 25°C, sea level conditions

Ordering Information

Sample Part Number ▶ **K70 A 8 4 1**

Series:

Contact Form:
A = SPST-NO B = SPST-NC C = SPDT

Coil Voltage:
8 = 26.5 Vdc, Turret Terminal

High Voltage Connections:
4 = Flying Leads, 12"
7 = Flying Leads, 72"
8 = Flying Leads, 36"

Mounting:
1 = Threaded

Catalog 5-1773450-5
Revised 3-13

www.te.com

Dimensions are shown for reference purposes only. Specifications subject to change.

Dimensions are in millimeters unless otherwise specified.

USA: +1 800 522 6752
Asia Pacific: +86 0 400 820 6015
UK: +44 800 267 666

For additional support numbers please visit www.te.com

Mounting Methods

KILOVAC "stacked ceramic" series relays can be easily mounted in any of the several ways shown below. The relay base should be mounted to a ground potential for high voltage applications. KILOVAC relays are not position sensitive and can be mounted in any orientation.

Optional Coil Turret Terminals for PD5, PD10; K41, K43 Types

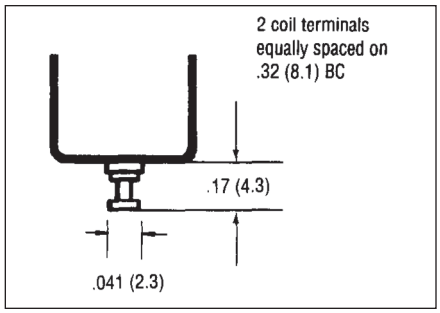

Figure 1.

Standard Flange Mounting

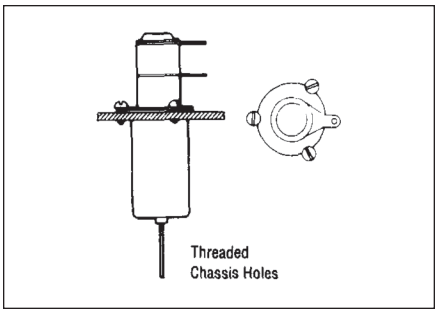

Figure 2.

Optional Flange Mounting for K44

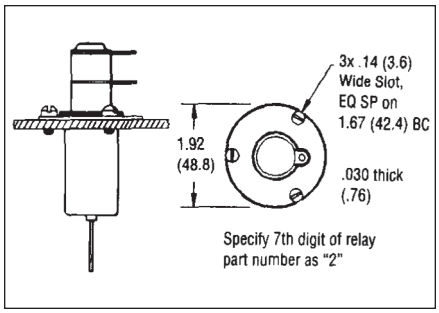

Figure 3.

Optional Flange Mounting for PD5, PD10; K40, K41, K43 and K45 types

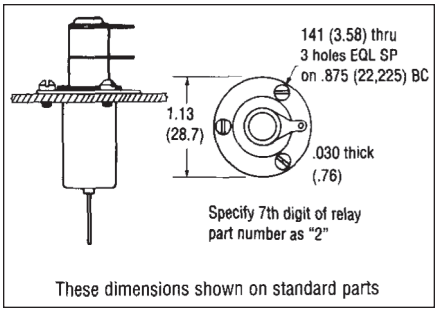

Figure 4.

Spring Clip Mounting

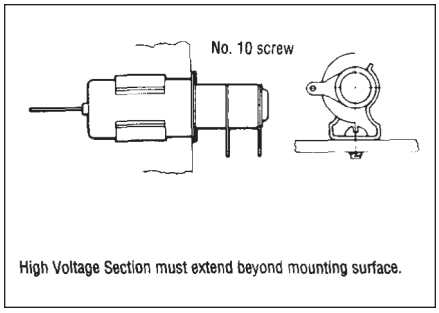

Figure 5. **Seastrom Manufacturing (800/447-3927 or 208/737-4300) Part Number 4502-53-50-2N or similar.**

Strap Mounting

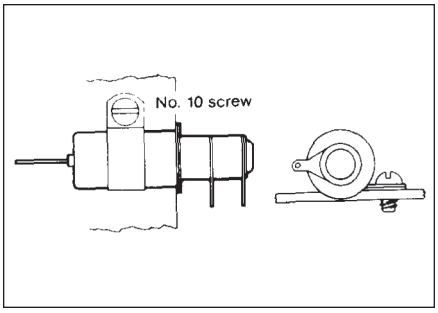

Figure 6. **Adel Fasteners 9320010 (stainless & silicone) 9320002 (carbon steel & neoprene)**

For factory-direct application assistance, dial 800-253-4560, ext. 2055, or 805-220-2055.

Catalog 5-1773450-5
Revised 3-13

www.te.com

Dimensions are shown for reference purposes only. Specifications subject to change.

Dimensions are in millimeters unless otherwise specified.

USA: +1 800 522 6752
Asia Pacific: +86 0 400 820 6015
UK: +44 800 267 666

For additional support numbers please visit www.te.com

Special Connectors

A number of KILOVAC relays are available with special, anti-corona high voltage connectors. Refer to the chart to determine if high voltage connectors are available for your model relay. These connectors can be ordered separately, by part number, or at the same time you order your relays (for "H: relays only) by simply adding the letter "C" to the part number. For instance, if you wish to purchase an H-8 relay with special connectors, you should order an "H-8C". If you already have an H-8, you can order three Part Number 0510 connectors and install them yourself by removing the standard solder lugs and carefully installing the connectors so as not to damage the glass-to-metal seals.

Optional High Voltage Connectors

Relay Model	Connector Part Number	
H-8 H-14 H-16 H-19 H-26	0510	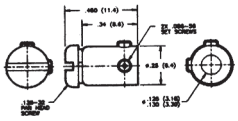
H-17 H-23 H-24	1886	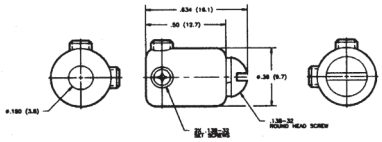
EV250-1A EV250-1B EV250-2A EV250-2B EV250-8A EV250-8B	2005	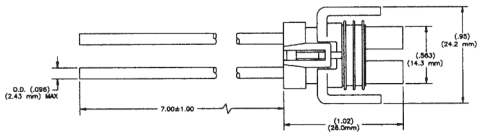
EV250-5A	2625	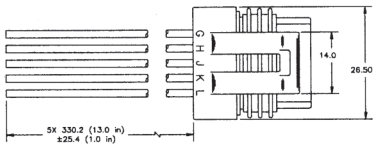
KC-2, KC-8 KC-11, KC-12 KC-15, KC-16 KC-14, KC-18	6822	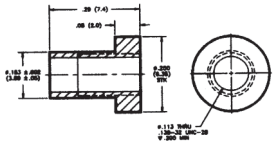

Connectors for EV250-1A, 1B, 2A & 2B

TE supplies a connector with 7 leads attached. Order Part Number 2005, Part Number 1618004-1.

For factory-direct application assistance, dial 800-253-4560, ext. 2055, or 805-220-2055.

Special Connectors (Continued)

Standard Lug Connectors

Relay Model	Connector Part Number	
H-18	0575	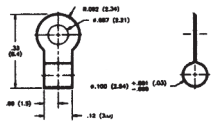
H-17	1447	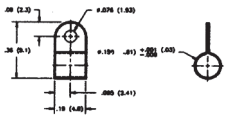
KM-13	6810	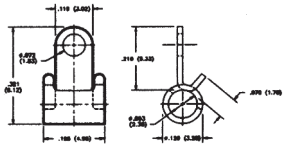
H-14 H-16 H-19 H-26	8488	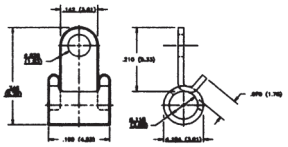

AC Coil Operation

All TE KILOVAC relays are supplied with a DC coil. If you wish to operate the relay with AC, you may order a bridge rectifier as Part Number 0260.

Bus Bar Connector Option for EV, LEV, CAP and MAP Products

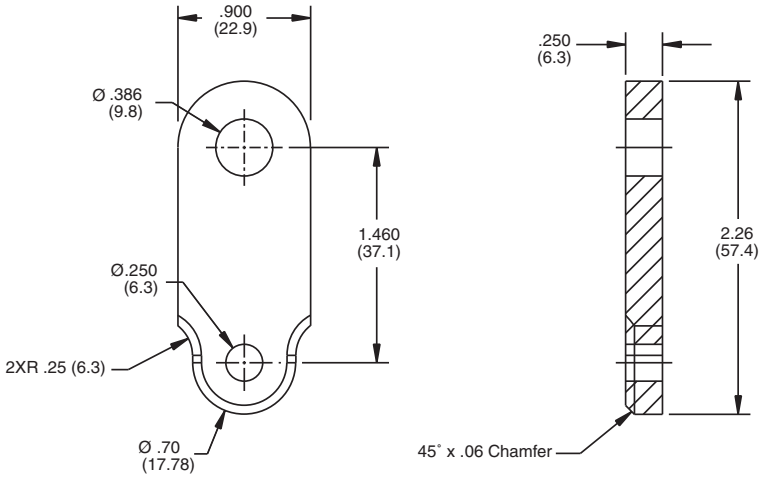

For factory-direct application assistance, dial 800-253-4560, ext. 2055, or 805-220-2055.

Catalog 5-1773450-5
Revised 3-13

www.te.com

Dimensions are shown for reference purposes only. Specifications subject to change.

Dimensions are in millimeters unless otherwise specified.

USA: +1 800 522 6752
Asia Pacific: +86 0 400 820 6015
UK: +44 800 267 666

For additional support numbers please visit www.te.com

Application Notes for EV/LEV Contactors

Introduction - Product Capabilities and Typical Applications

TE KILOVAC EV and LEV contactors are designed to be the highest performance, smallest and lightest weight, sealed High Voltage contactors in the industry. With current carrying capability of up to 500A and power switching up to 200kW, they are used in a variety of industrial, marine, automotive, and commercial applications. Primarily designed to switch resistive loads,they can be used in a variety of circuit applications bearing in mind a few important considerations. This application note focuses on a few of the more common circuit configurations, and what to consider when selecting, installing and using the contactors.

1. Installation

EV/LEV contactors can be mounted in any orientation, and due to the nature of their hermetic seal and isolated enclosure, can be mounted in close proximity to other equipment. However, care must be taken with regard to the termination of the power cables to the main terminals. It is important that the main power connection lugs are mated directly to the terminal seats. Be sure that the hardware stackup is in the proper order, and that washers and other spacers are not placed between the lug and terminal seat. Extraneous connection resistance can cause considerable power dissipation and terminal heating at high current carry.

Refer to Figure 1 and Table I for the recommended hardware stackup and torque.

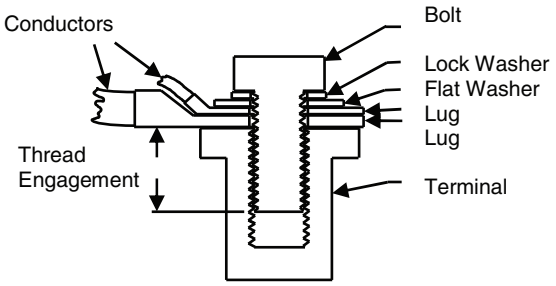

Figure 1
Main Terminal Hardware Installation

Table I

THREAD ENGAGEMENT(turns)	TORQUE
Less than 5	Use longer fastener
5 TO 7	7.9 Nm (70 in-lb) MAX
7 TO 8	9.0 Nm (80 in-lb) MAX
8 TO 11	9.0 Nm (80 in-lb) 11 Nm (100 in-lb) MAX
Mounting Feet (all)	1.7-3.3 Nm (30-35 in-lb)

Table I

Use the same guidelines and torque maximum values for stud terminal contactors as well.

2. Coils, Drive Circuits and Coil Economizing

Since the power required to close the contacts is generally much greater than the required holding power, many KILOVAC contactors can be packaged with low-profile coils that utilize either an electronic economizer (switchmode PWM), or mechanical cut-throat economizer. The economizer lets-through the higher power required for contact closure, then reduces the power for holding, greatly reducing the coil power consumption and heating. These circuits are packaged with the contactor, and in most cases include coil suppression components as well. For customers who wish to provide their own circuitry, TE can provide suggestions for driving the coils of all versions of contactors. Single coil, uneconomized products are also available in the LEV product line. These coils are designed to operate at nominal power over all specified voltage and temperature ranges withouteconomizing circuitry. DC Coils up to 400Vdc and AC coils with integrated converters are available up to 240Vac.

3. Load Types and Power Switching Recommendations

In general, all EV/LEV contactors are designed primarily for connection and interruption of resistive loads and slightly inductive loads (L/R<1ms). High currents (up to 2000A) can be interrupted in case of circuit faults, and high continuous currents upwards of 500A can be maintained through closed contacts. Some important points to consider are:

a. Closing into current spikes due to uncharged filter capacitors. Capacitors should be pre-charged whenever possible to avoid excessive contact erosion and nuisance welds. Keep inrush current spikes below 650A at all times. Care should also be taken when considering other high-inrush loads such as lamps or motors.

b. Large current spikes through closed contacts. Large current spikes through closed contacts in excess of 3000A can sometimes cause spot welding or contact levitation.

c. Circuit inductance. Contactor break-arcs generally last as long as it takes to dissipate the stored inductive energy of the load (t (arc) = 1.1*L/R).

Longer arcs due to circuit inductance can accelerate contact wear, and in extreme cases, can cause contactor failure. TE recommends that the time constant of the load be less than 1ms for safe operation and maximum life.

Contactor life is a function of the power level switched. Higher make/break currents erode contact materials faster and accelerate loss of dielectric withstanding between the open contacts. Figure 2 can be used as a guideline for estimating product life at a given load.

Catalog 5-1773450-5
Revised 3-13

www.te.com

Dimensions are shown for reference purposes only. Specifications subject to change.

Dimensions are in millimeters unless otherwise specified.

USA: +1 800 522 6752
Asia Pacific: +86 0 400 820 6015
UK: +44 800 267 666

For additional support numbers please visit www.te.com

Application Notes for EV/LEV Contactors (Continued)

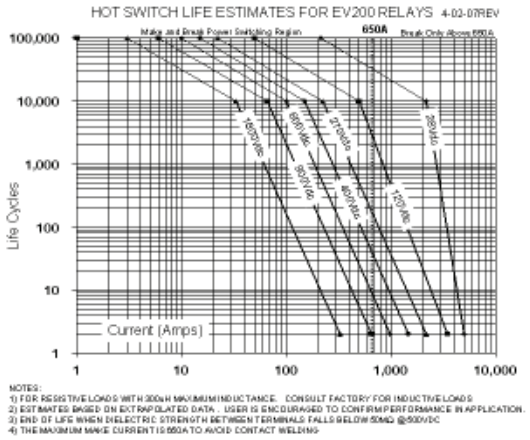

Figure 2
Life Cycles vs. Power Switched

4. Recommended Conductor Sizes for Continuous Current Carry

Many sources exist for recommending the proper conductor size for a given current carry. Many of these sources are concerned primarily with wire insulation safety issues. Cable bundling, conduit types, length of runs, etc., are all important considerations. With regard to a contactor placed in line with the conductors, it is important to make sure that the wire size is sufficient such that the contactor terminals themselves do not overheat, leading to a failure of the device. In most cases, the primary path for removal of heat from the contactor terminals is the conductors themselves. Convection to atmosphere and conduction via the base mountings play a lesser role in this type of contactor due to the nature of the construction. TE has performed basic characterization of many of the styles of contactors discussed herein, and the data is presented in Figure 3. The recommended maximum power terminal temperature for all EV/LEV contactors is 150° C continuous and 175° C for 1 hour.

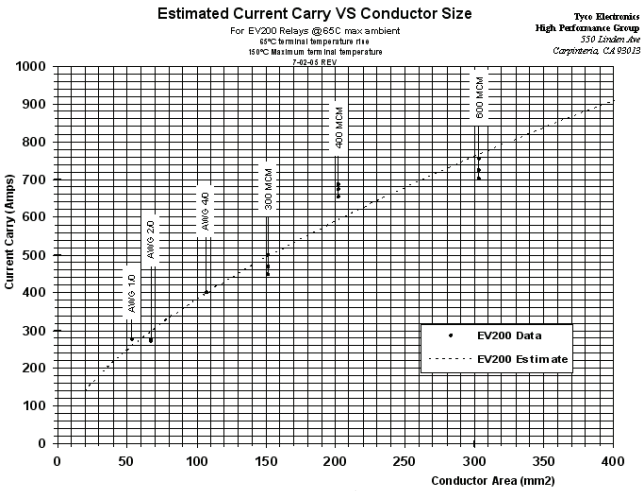

Figure 3
Recommended Conductor Sizes

For applications requiring larger conductors than can practically be installed with single 4/0 AWG cable and lugs, adapter buss extensions can be obtained from TE.

5. Auxiliary Circuits

Auxiliary contacts are available on most models. Configurations available are: SPST-NO, SPST-NC and SPDT. Auxiliary contacts are rated at 125Vac/ 1A or 30Vdc/3A. Contacts with gold plating for low level loads are also available. For circuit voltage below 10V/0.1A, gold contacts are recommended.

The auxiliary contact actuating method will indicate the true position of the main contacts. The auxiliary contact actuation is directly coupled to the main contact moving bridge, and will not indicate “open” unless both contact gaps of the double-make, Form X contact are fully disconnected. Keep in mind that the auxiliary contact is mainly a status indication, and should not be used to directly power other loads such as a relay coil or high power lamp load.

6. Environmental Considerations

All KILOVAC contactors are characterized for operation in thermal, vibration, moisture and fluid environments. Consult the appropriate data sheet for limits concerning shock, vibration, temperature range and altitude limits. In some cases, there may be variations in limits with regard to “specified operation” or “survival only”.

7. Custom Configurations

Most parts can be ordered with a variety of combinations of main terminal and coil configurations, auxiliary contacts, interface connectors, coil voltages, etc. If you have a requirement for a particular configuration not shown on the data sheet, consult the factory for information regarding custom configurations.

8. Summary

This Application Note is meant to address some of the more common questions regarding the use of EV/LEV contactors. In all cases, please refer to the applicable product data sheet for specific information. Also, Product Application Engineers are available to answer questions regarding these products by calling 800-253-4560 x2055, or 805-220-2055.

Catalog 5-1773450-5
Revised 3-13

www.te.com

Dimensions are shown for reference purposes only. Specifications subject to change.

Dimensions are in millimeters unless otherwise specified.

USA: +1 800 522 6752
Asia Pacific: +86 0 400 820 6015
UK: +44 800 267 666

For additional support numbers please visit www.te.com

Application Notes for MAP/CAP Contactors

Introduction - Product Capabilities And Typical Applications

TE KILOVAC MAP/CAP contactors are designed to be the highest performance, smallest and lightest weight, sealed High Voltage contactors in the industry. With current carrying capability of up to 500A and power switching up to 200kW, they are used in a variety of commercial aerospace and military applications. Primarily designed to switch resistive loads, they can be used in a variety of circuit applications bearing in mind a few important considerations. This application note focuses on a few of the more common circuit configurations, and what to consider when selecting, installing and using the contactors.

1. Installation

TE KILOVAC MAP/CAP contactors can be mounted in any orientation, and due to the nature of their hermetic seal and isolated enclosure, can be mounted in close proximity to other equipment. However, care must be taken with regard to the termination of the power cables to the main terminals. It is important that the main power connection lugs are mated directly to the terminal seats. Be sure that the hardware stackup is in the proper order, and that washers and other spacers are not placed between the lug and terminal seat. Extraneous connection resistance can cause considerable power dissipation and terminal heating at high current carry. Refer to Figure 1 and Table I for the recommended hardware stackup and torque.

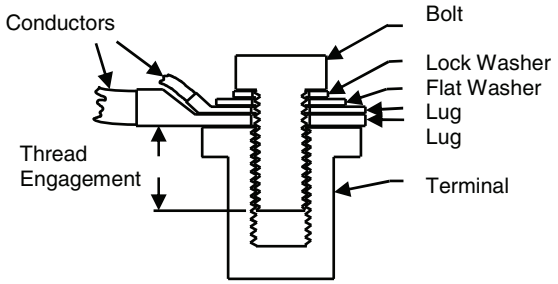

Figure 1
Main Terminal Hardware Installation

THREAD ENGAGEMENT(turns)	TORQUE
Less than 5	Use longer fastener
5 TO 7	7.9 Nm (70 in-lb) MAX
7 TO 8	9.0 Nm (80 in-lb) MAX
8 TO 11	9.0 Nm (80 in-lb) 11 Nm (100 in-lb) MAX
Mounting Feet (all)	1.7-3.3 Nm (30-35 in-lb)

Table I

Use the same guidelines and torque maximum values for stud terminal contactors as well.

2. Coils, Drive Circuits and Coil Economizing

Since the power required to close the contacts is generally much greater than the required holding power, many contactors can be packaged with low-profile coils that utilize either an electronic economizer (switchmode PWM, electronic cut-throat), or mechanical cutthroat economizer. The economizer lets-through the higher power required for contact closure, then reduces the power for holding, greatly reducing the coil power consumption and heating. These circuits are packaged with the contactor, and in most cases include coil suppression components as well. For customers who wish to provide their own circuitry, TE can provide suggestions for driving the coils of all versions of contactors. Four types of actuators are typically used:

a. Single Coil requiring customer economizer circuit

b. Single Coil with supplied electronic economizer

c. Dual Coil with supplied mechanical "cut-throat" economizer

d. Dual Coil with supplied electrical “cut-throat” economizer

The advantages of each type of coil circuit are shown in Table II.

Type	Advantage
Electronic PWM	Operates over widest voltage range
Electronic CT	Simple, Robust, EMC Compliant
Mechanical CT	Simple, robust, fastest operate time
Single Coil - (customer economized)	Flexibility, lower initial cost

Table II
Coil Configurations

3. Load Types and Power Switching Recommendations

In general, all MAP/CAP contactors are designed primarily for connection and interruption of resistive loads and slightly inductive loads (L/R<1ms). High currents (up to 2000A) can be interrupted in case of circuit faults, and high continuous currents upwards of 500A can be maintained through closed contacts. Some important pints to consider are:

a. Closing into current spikes due to uncharged filter capacitors. Capacitors should be pre-charged whenever possible to avoid excessive contact erosion and nuisance welds. Keep inrush current spikes below 650A at all times. Care should also be taken when considering other high-inrush loads such as lamps or motors.

Catalog 5-1773450-5
Revised 3-13

www.te.com

Dimensions are shown for reference purposes only. Specifications subject to change.

Dimensions are in millimeters unless otherwise specified.

USA: +1 800 522 6752
Asia Pacific: +86 0 400 820 6015
UK: +44 800 267 666

For additional support numbers please visit www.te.com

Application Notes for MAP/CAP Contactors (Continued)

b. Large current spikes through closed contacts. Large current spikes through closed contacts in excess of 3000A can sometimes cause spot welding or contact levitation. Consult with the factory if your application requires passing large current pulses. Many contactors can be ordered with "Dual Contact" arrangements (Arcing contacts of harder material in parallel with high current carry material).

c. Circuit inductance. Contactor break-arcs generally last as long as it takes to dissipate the stored inductive energy of the load (t (arc) = 1.1*L/R).

Longer arcs due to circuit inductance can accelerate contact wear, and in extreme cases, can cause contactor failure. TE recommends that the time constant of the load be less than 1ms for safe operation and maximum life.

Contactor life is a function of the power level switched. Higher make/break currents erode contact materials faster and accelerate loss of dielectric withstanding between the open contacts. Figure 2 can be used as a guideline for estimating product life at a given load.

Longer arcs due to circuit inductance can accelerate contact wear, and in extreme cases, can cause contactor failure. TE recommends that the time constant of the load be less than 1ms for safe operation and maximum life.

Contactor life is a function of the power level switched. Higher make/break currents erode contact materials faster and accelerate loss of dielectric withstanding between the open contacts. Figure 2 can be used as a guideline for estimating product life at a given load.

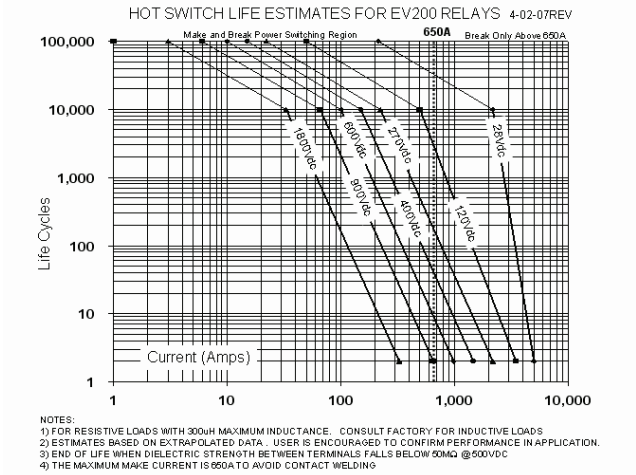

Figure 2
Life Cycle vs. Power Switched

4. Recommended Conductor Sizes for Continuous Current Carry
Many sources exist for recommending the proper conductor size for a given current carry. Many of these sources are concerned primarily with wire insulation safety issues. Cable bundling, conduit types, length of runs, etc., are all important considerations. With regard to a contactor placed in line with the conductors, it is important to make sure that the wire size is sufficient such that the contactor terminals themselves do not overheat, leading to a failure of the device. In most cases, the primary path for removal of heat from the contactor terminals is the conductors themselves. Convection to atmosphere and conduction via the base mountings play a lesser role in this type of contactor due to the nature of the construction. TE has performed basic characterization of many of the styles of contactors discussed herein, and the data is presented in Figure 3.

The recommended maximum power terminal temperature for all MAP/CAP contactors is 150° C continuous and 175° C for 1 hour.

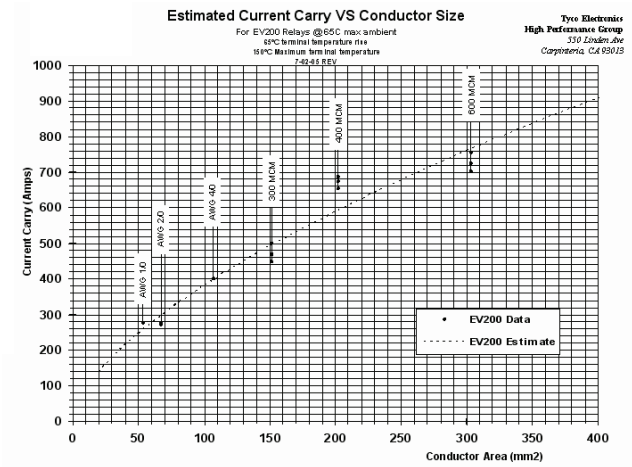

Figure 3
Recommended Conductor Sizes

For applications requiring larger conductors than can practically be installed with single 4/0 AWG cable and lugs, adapter buss extensions can be obtained from TE.

5. Auxiliary Circuits
Auxiliary contacts are available on most models. Configurations available are: SPST-NO, SPST-NC and SPDT. Auxiliary contacts are rated at 125Vac/ 1A or 30Vdc/3A. Contacts with gold plating for low level loads are also available. For circuit voltage below 10V/0.1A, gold contacts are recommended. The auxiliary contact actuating method will indicate the true position of the main contacts. The auxiliary contact actuation is directly coupled to the main contact moving bridge, and will not indicate “open” unless both contact gaps of the double-make, Form X contact are fully disconnected. Keep in mind that the auxiliary contact is mainly a status indication, and should not be used to directly power other loads such as a relay coil or high power lamp load.

Catalog 5-1773450-5
Revised 3-13

www.te.com

Dimensions are shown for reference purposes only. Specifications subject to change.

Dimensions are in millimeters unless otherwise specified.

USA: +1 800 522 6752
Asia Pacific: +86 0 400 820 6015
UK: +44 800 267 666

For additional support numbers please visit www.te.com

Application Notes for MAP/CAP Contactors (Continued)

6. Environmental Considerations
All TE KILOVAC contactors are characterized for operation in thermal, vibration, moisture and fluid environments. Consult the appropriate data sheet for limits concerning shock, vibration, temperature range and altitude limits. In some cases, there may be variations in limits with regard to “specified operation” or “survival only”.

7. Custom Configurations
Most parts can be ordered with a variety of combinations of main terminal and coil configurations, auxiliary contacts, interface connectors, coil voltages, etc. If you have a requirement for a particular configuration not shown on the data sheet, consult the factory for information regarding custom configurations.

8. Summary
This Application Note is meant to address some of the more common questions regarding the use of MAP/CAP contactors. In all cases, please refer to the applicable product data sheet for specific information.

Also, Product Application Engineers are available to answer questions regarding these products by calling 800-253-4560 x2055, or 805-220-2055.

Application Notes on Coil Power Economizing using PWM Circuits

Introduction - Reducing Coil Power Dissipation through the use of PWM Circuits
The coil power of most TE KILOVAC Relays and Contactors can be reduced after Pickup by using several economizing schemes. One of the most popular methods used in many of our standard products, and one that is suitable for implementation by customers, is the Pulse Width Modulated (PWM) coil driver.

1. Typical PWM Coil Drive Circuit
Figure 1 shows a typical PWM coil drive/economizer circuit.

In the circuit shown, the “Fast Dropout” (FDO) and PWM driver are energized simultaneously for a sufficient time to allow the contacts to fully close. The PWM driver is then modulated such that the stored coil energy is utilized during the PWM driver “OFF” time to circulate holding current through the FDO driver and freewheeling diode. Since the holding current is much lower than the current required for pickup, the holding power for the contacts is greatly reduced.

The Fast Dropout circuit allows for the switching in/out of the "free-wheeling" diode. When power is removed, the FDO and PWM drivers will turn off, causing the stored energy of the coil to be rapidly dissipated in the body diodes. This minimizes the decay time of the coil current and facilitates a fast opening of the relay contacts.

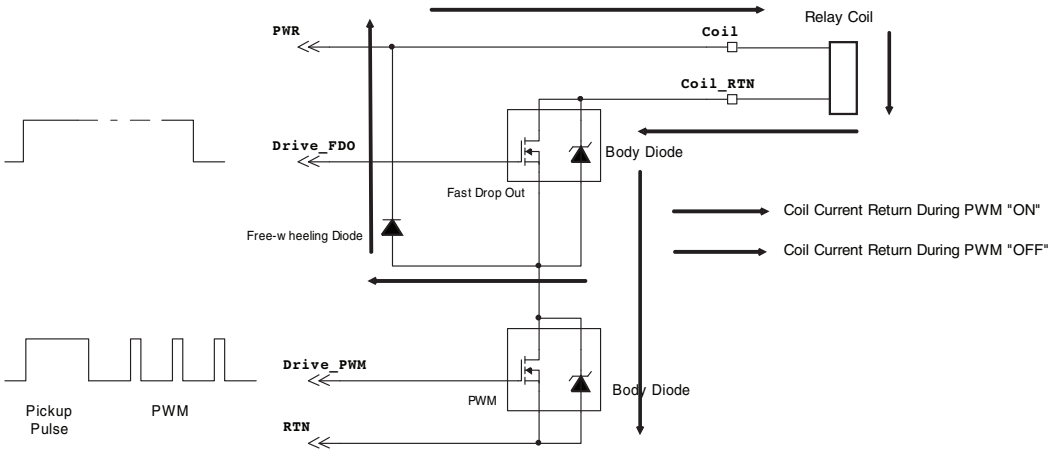

Fast Drop-out FET stays on during operation. FDO and Power can be applied simultaneously

Filtering/Protection should be applied to FET gates as required.

For higher energy coils, additional TVS protection may be required across FET drain-to-source.

Figure 1
Coil Drive Circuit

Catalog 5-1773450-5
Revised 3-13

www.te.com

Dimensions are shown for reference purposes only. Specifications subject to change.

Dimensions are in millimeters unless otherwise specified.

USA: +1 800 522 6752
Asia Pacific: +86 0 400 820 6015
UK: +44 800 267 666

For additional support numbers please visit www.te.com

Application Notes on Coil Power Economizing using PWM Circuits (Continued)

This fast opening is useful for circuit interruption, and it allows the over travel mechanism of the contact actuator to work effectively in breaking minor contact welds that may occur when closing the contacts.

Allowing the free-wheeling diode to remain across the coil would significantly increase the contact opening time and opening speed, and possibly result in nuisance contact welds and/or reduced capability to interrupt circuit currents.

If additional diodes are required to protect the FET body diodes, select a Transient Voltage Suppressor (TVS) diode with a breakdown rating lower than that of the driver FET body diode. In general, a higher voltage TVS diode will result in faster contact opening and higher clamping voltage, while a lower voltage TVS diode will result in slower contact opening and lower clamping voltage. For more detailed information regarding TVS diode selection, contact TE and request the report titled DC Relay Magnetic Energy Determination and Transient Voltage suppressor Diode Selection.

1.1 Recommended Operating Frequency and Duty Cycle

The frequency at which the PWM circuit is operated should be high enough such that the oscillation of the coil current does not lead to audible noise being generated by the magnetic components and coil winding. For most KILOVAC contactors, a coil drive frequency > 15 kHz is usually sufficient to ensure that nuisance audible noise is not generated. The PWM duty cycle required for economizing power while maintaining sufficient holding force can be calculated from the required holding current as follows:

Duty Cycle(%) = (Ihold*R(T)Coil/Vsource)*100 (1)

Where:
R(T) = Coil Resistance at Temperature
I_{hold} = Required Holding Current
V_{source} = Source Voltage

Contact TE regarding the minimum required hold current needed for a particular Part Number. In general, divide the specified dropout voltage by the coil resistance at 20°C, and add 25% above that to get an estimate of the value to use in equation (1) for I_{hold}.

2.0 Summary

This Application Note is meant to address some of the more common questions regarding the use of PWM circuits for coil power economization. In all cases, please refer to the applicable product data sheet for specific information.

TE can also recommend alternative solutions for mechanical dual-coil economizers, as well as “Electronic Cut-Throat” economizers. Product Application Engineers are available to answer questions regarding this subject by calling 800-253-4560 x2055, or 805-220-2055.

Catalog 5-1773450-5
Revised 3-13
www.te.com

Dimensions are shown for reference purposes only. Specifications subject to change.
Dimensions are in millimeters unless otherwise specified.
USA: +1 800 522 6752
Asia Pacific: +86 0 400 820 6015
UK: +44 800 267 666
For additional support numbers please visit www.te.com

Engineering Notes

Catalog 5-1773450-5
Revised 3-13

www.te.com

Dimensions are shown for reference purposes only. Specifications subject to change.

Dimensions are in millimeters unless otherwise specified.

USA: +1 800 522 6752
Asia Pacific: +86 0 400 820 6015
UK: +44 800 267 666

For additional support numbers please visit www.te.com

Table of Contents

1600/1700 Series, Delay on Operate, Fixed & Adjustable 8-2, 8-3
2400 Series, Subminiature, Delay on Operate, Fixed 8-4
5600/5700 Series, Delay on Release, Fixed & Adjustable 8-5, 8-6
1800/1900 Series, Delay on Operate, Fixed & Adjustable, Solid State Output 8-7
6001 Series, Delay on Operate, Fixed, Solid State Output,
Qualified to MIL-PRF-83726/13 8-8
2600 Series, Flasher/Repeat-Cycle, Timer-Fixed, Solid State Output 8-9
4600/4700 Series Interval Timers, Fixed & Adjustable, Relay Output 8-10, 8-11
4800 Series Interval Timers, Delay on Operate, Solid State Output 8-12

Catalog 5-1773450-5
Revised 3-13

www.te.com

Dimensions are shown for reference purposes only. Specifications subject to change.

Dimensions are in millimeters unless otherwise specified.

USA: +1 800 522 6752
Asia Pacific: +86 0 400 820 6015
UK: +44 800 267 666

For additional support numbers please visit www.te.com

1600/1700 Series Delay On Operate Timers

Product Facts

- **AC/DC input delay on operate timer offered in fixed (1600) and adjustable (1700) types**
- **Up to 10A loads**
- **CMOS digital design**
- **Hermetic package**
- **Built to MIL-R-83726 environmentals**
- **Many customizing options**
  - **Extended timing ranges**
  - **Tighter timing tolerances**
  - **Header and mounting**
  - **115Vac, 60 Hz. input types**

Kilovac 1600/1700 series delay on operate timers combine solid state timing circuits with electromechanical output relays in robust hermetically sealed enclosures. The 1600 types are fixed timers, while the 1700 models are adjustable via an external resistor. Numerous output options include 4A rated contacts in 1-4 form C (SPDT - 4PDT) arrangements and 10A rated contacts in 1-2 form C (SPDT-DPDT) arrangements.

Electrical Specifications

Timing Range —
1600 series (fixed) — 50 ms to 600 s
1700 series (adjustable) — 50 ms to 240 s

Tolerance — ±10% or 10 ms, whichever is greater

Recycle Time — 10 ms (DC input), 50ms (AC input)

Recovery Time — 10 ms (DC input), 50ms (AC input)

Input Voltage — 18 to 31Vdc, 105 to 125Vac, 400 Hz

Current Drain (at 25°C, 28Vdc) —
DC Coil, 10A contacts —
1- and 2-pole — 135mA maximum

AC or DC Coil, 4A contacts —
1-pole — 100mA maximum
2-pole — 150mA maximum
3- and 4-pole — 200mA maximum

Contact Ratings —
DC Coil, 10A contacts —
10A resistive @ 30Vdc
5A inductive @ 30Vdc
5A resistive @ 115 Vrms, 400 Hz
3A inductive @ 115 Vrms, 400 Hz

AC or DC Coil, 4A contacts —
4A resistive @ 30Vdc
1A inductive @ 30Vdc
2A resistive @ 115 Vrms, 400 Hz
1A inductive @ 115 Vrms, 400 Hz

Environmental Specifications

Temperature Range —
-55°C to +85°C or -55°C to +125°C

Vibration — 20 G's, 10 - 2,000 Hz

Shock — 50 G's, 11 ± 1ms duration

Insulation Resistance — 1,000 megohms, min., at 500Vdc, all terminals to case

Dielectric Strength — 1,000Vrms, 60 Hz., at sea level, all terminals to case

Sealing — Hermetic, 1.3 in. (33.0mm) of mercury

Life — 100,000 operations, min.

Weight —
4A units — 4.5 oz (127.6g) max.
10A units — 8.5 oz (240g) max.

Specifications by Model Number – 4 Amp Contact Versions

Fixed Timer Model Number	Adjustable Timer Model Number	Input Voltage	Temperature Range	Housing Length (Dim. "A")	Contact Arrangement
1601	1701	DC	-55°C to +85°C	1.656 [42.06]	1 Form C (SPDT)
1602	1702	DC	-55°C to +85°C	1.656 [42.06]	2 Form C (DPDT)
1603	1703	DC	-55°C to +85°C	2.0 [50.8]	3 Form C (3PDT)
1604	1704	DC	-55°C to +85°C	2.0 [50.8]	4 Form C (4PDT)
1621	1721	DC	-55°C to +125°C	1.656 [42.06]	1 Form C (SPDT)
1622	1722	DC	-55°C to +125°C	1.656 [42.06]	2 Form C (DPDT)
1623	1723	DC	-55°C to +125°C	2.0 [50.8]	3 Form C (3PDT)
1624	1724	DC	-55°C to +125°C	2.0 [50.8]	4 Form C (4PDT)
1651	1751	AC	-55°C to +85°C	2.0 [50.8]	1 Form C (SPDT)
1652	1752	AC	-55°C to +85°C	2.0 [50.8]	2 Form C (DPDT)
1653	1753	AC	-55°C to +85°C	2.375 [60.33]	3 Form C (3PDT)
1654	1754	AC	-55°C to +85°C	2.375 [60.33]	4 Form C (4PDT)
1671	1771	AC	-55°C to +125°C	2.0 [50.8]	1 Form C (SPDT)
1672	1772	AC	-55°C to +125°C	2.0 [50.8]	2 Form C (DPDT)
1673	1773	AC	-55°C to +125°C	2.375 [60.33]	3 Form C (3PDT)
1674	1774	AC	-55°C to +125°C	2.375 [60.33]	4 Form C (4PDT)

Specifications by Model Number – 10 Amp Contact Versions

Fixed Timer Model Number	Adjustable Timer Model Number	Input Voltage	Temperature Range	Housing Length (Dim. "A")	Contact Arrangement
1610	1710	DC	-55°C to +85°C	2.419 [61.44]	1 Form C (SPDT)
1620	1720	DC	-55°C to +85°C	2.419 [61.44]	2 Form C (DPDT)

Adjustable Timing Formula (1700 types)

The resistance required to obtain timing within this range is determined by using the formula:

Rx = 400K (T/Tmax.) – 40K, where

Rx = External Resistance in Ohms,
T = Desired Time in Seconds, and
Tmax. = Maximum Time (Code).

A high quality deposited carbon ±1%, 0.1W (min.) resistor is recommended for external resistance.

Part Numbering System

Typical Part Number 1722 –C – 1102

Model Number:
Four digit code from table above.

Mounting (see outline dimension drawings):
A = Studs on bottom B = Studs on top C = Studs on side

Timing Code:
Four-digit code for any value between 50ms.

A typical part number for an adjustable timer would be 1722–C–1102. This is a DC unit in the -55°C to +125°C temperature range with a 2 form C (DPDT) contact arrangement in a style "C" mounting, with a maximum time delay of 11s.

Catalog 5-1773450-5
Revised 3-13

www.te.com

Dimensions are shown for reference purposes only. Specifications subject to change.

Dimensions are in millimeters unless otherwise specified.

USA: +1 800 522 6752
Asia Pacific: +86 0 400 820 6015
UK: +44 800 267 666

For additional support numbers please visit www.te.com

1600/1700 Series Delay On Operate Timers (Continued)

Outline Dimensions

10 Amp Units

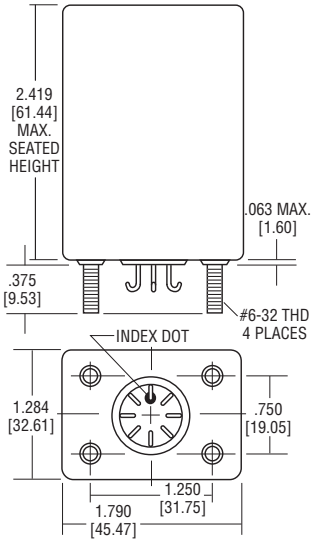

Mounting Option A

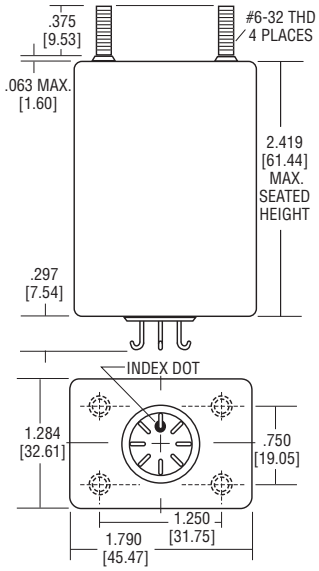

Mounting Option B

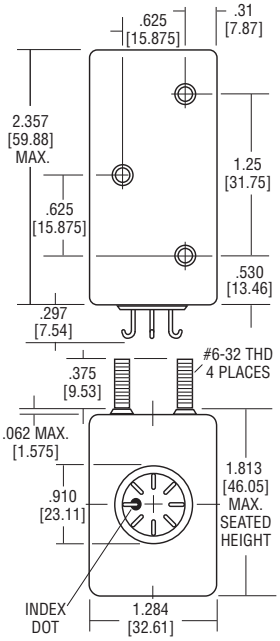

Mounting Option C

4 Amp Units

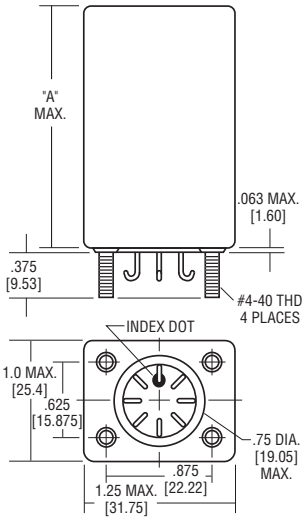

Mounting Option A

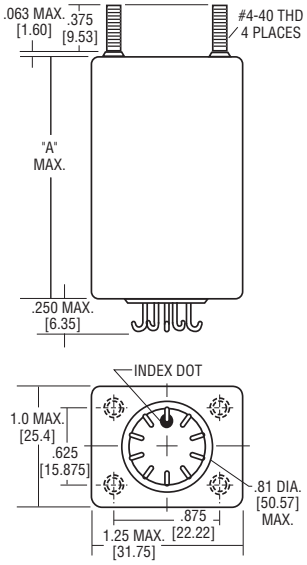

Mounting Option B

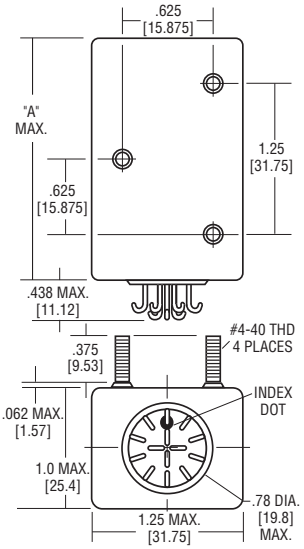

Mounting Option C

Wiring Diagrams

1600 Series (Fixed)

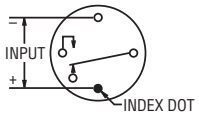

1 Form C

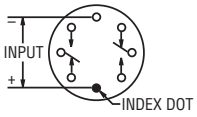

2 Form C

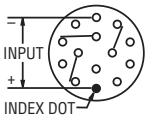

3 Form C

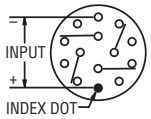

4 Form C

1700 Series (Adjustable)

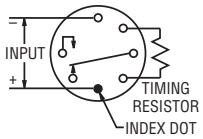

1 Form C

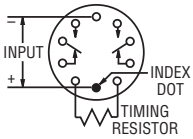

2 Form C

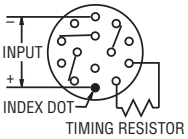

3 Form C

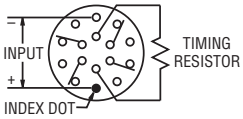

4 Form C

Catalog 5-1773450-5
Revised 3-13

www.te.com

Dimensions are shown for reference purposes only. Specifications subject to change.

Dimensions are in millimeters unless otherwise specified.

USA: +1 800 522 6752
Asia Pacific: +86 0 400 820 6015
UK: +44 800 267 666

For additional support numbers please visit www.te.com

2400 Series Delay On Operate Timer, Fixed Timing, Relay Output

Product Facts

- **DC input fixed delay on operate timer**
- **2 Form C (DPDT), 2A output**
- **CMOS digital design**
- **Reverse polarity protection**
- **Hermetic package**
- **Built to MIL-R-83726 environmentals**
- **Customizing options include**
  - **Tighter timing tolerances**
  - **Header and mounting**
  - **Different input voltages**

Kilovac 2400 series delay on operate timers combine solid state timing circuits with relay outputs in robust hermetically sealed enclosures. They are fixed timers. The 2 Form C (DPDT) output relay is rated 2A.

Electrical Specifications

Timing Range — 50 ms to 600 s

Tolerance — ±10% or 10 ms, whichever is greater

Recycle Time — 10 ms

Recovery Time — 20 ms

Input Data —

Input Voltage — 18 to 31Vdc

Current Drain — 85mA @ 31Vdc, 25°C

Output Data —

Output Form — 2 Form C (DPDT).

Output Rating —
2A resistive at 30Vdc;
125mA resistive at 115Vac, 400 Hz

Transient Protection — 80Vdc for 50ms

Environmental Specifications

Temperature Range —
-55°C to +85°C or -55°C to +125°C

Vibration — 20 G's, 10 - 2,000 Hz

Shock — 50 G's, 11 ± 1ms duration

Insulation Resistance — 1,000 megohms, min., at 500Vdc, all terminals to case

Dielectric Strength — 500Vrms, 60 Hz., at sea level, all terminals to case

Sealing — Hermetic, 1.3 in. (33.0mm) of mercury

Life — 100,000 operations, min.

Weight — 1.2 oz (30g) max.

Plug-in sockets are available for header option 2

Part Numbering System

Typical Part Number	2401	–1	A	– 1102

Model Number:
2401 = Fixed timer, -55°C to +85°C
2402 = Fixed timer, -55°C to +125°C

Header Style (see Header Options drawings):
1 = Hook terminals 2 = Straight terminals, short
3 = Straight terminals, long

Mounting (see outline dimension drawings):
A = Plain case B = Bracket B D = Studs on side E = Bracket E

Timing Code:
Four-digit code for any value between 50ms and 600s.

The timing code consists of four digits and gives the time in ms. The first three digits are the significant figures and the last digit is the number of zeros following the significant figures; thus 50 ms would be coded 0500, 1.1 s would read 1101, and 1 m (60 s) would be 6002.

A typical part number would be 2401–1A–1102. This fixed timer operates at -55°C to +85°C, has hook terminals, style "A" mounting, and a time delay of 11s.

Timing Diagram

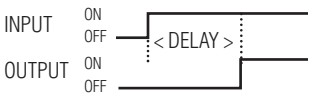

Outline Dimensions

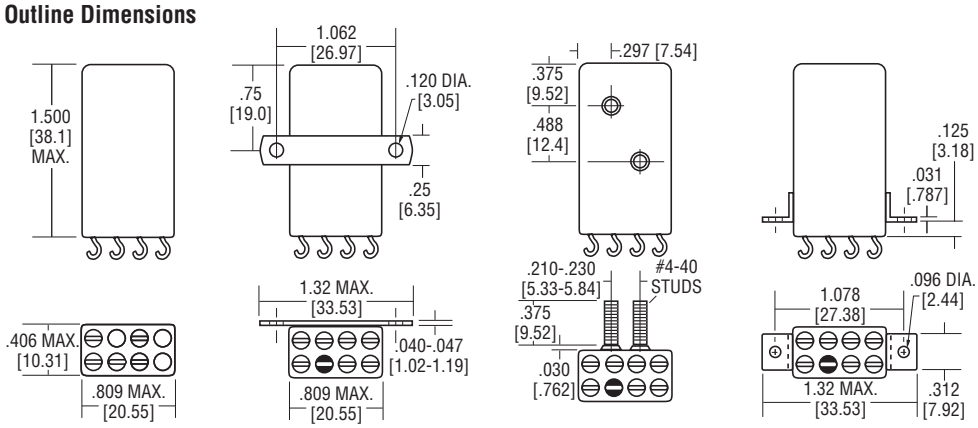

Mounting Option A **Mounting Option B** **Mounting Option D** **Mounting Option E**

Wiring Diagram

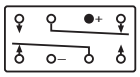

Header Options

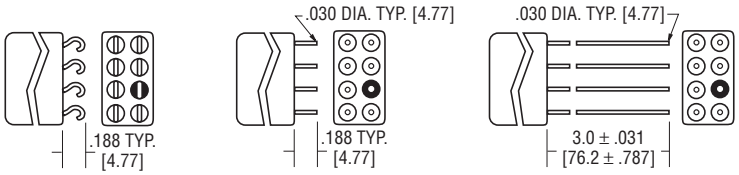

TERMINAL SPACING IS 0.2 [5.08] FOR ALL HEADERS

Header Option 1 **Header Option 2** **Header Option 3**

Catalog 5-1773450-5
Revised 3-13

www.te.com

Dimensions are shown for reference purposes only. Specifications subject to change.

Dimensions are in millimeters unless otherwise specified.

USA: +1 800 522 6752
Asia Pacific: +86 0 400 820 6015
UK: +44 800 267 666

For additional support numbers please visit www.te.com

5600/5700 Series Delay On Release Timers

Product Facts

- **DC input delay on release timer offered in fixed (5600) and adjustable (5700) types**
- **Up to 10A loads**
- **Reverse polarity protection**
- **CMOS digital design**
- **Built to MIL-R-83726 environmentals**
- **Many customizing options**
  - **Extended timing ranges**
  - **Tighter timing tolerances**
  - **Header and mounting**
  - **Different Aux. voltages**
  - **Different control line voltages**
  - **Input either 115Vac, 60 Hz or 400 Hz.**

Kilovac 5600/6700 series delay on release timers combine solid state timing circuits with electromechanical output relays in robust hermetically sealed enclosures. The 5600 types are fixed timers, while the 5700 models are adjustable via an external resistor.

Numerous output options include 2A, 5A and 10A rated contacts in 1, and 2 form C (SPDT and DPDT) arrangements.

Electrical Specifications

Timing Range —
5600 series (fixed) — 50 ms to 600 s
5700 series (adjustable) — 50 ms to 240 s

Tolerance — ±10% or ±15ms, whichever is less

Recycle Time — 10 ms

Reset Time — 20 ms

Operate Time (Max.) — 10 ms (2A and 5A models), 20ms (10A models)

Input Voltage — 18 to 31Vdc

Control Voltage — 10 to 31Vdc. Ground common to aux. power line. 10Vdc minimum must be applied for a minimum duration of 20ms to energize output and initiate the timing circuit.

Current Drain (at 25°C, 28Vdc) —
Control Line — 15mA typ., 25mA max.
Input Line De-energized (after completion of delay period) — 125 mA
Input Line Energized —
1-pole, 2 & 5A models — 100mA
1-pole, 10A models — 150mA
2-pole, 2 & 5A models — 150mA
2-pole,10A models — 240mA

Contact Ratings —
10A contacts —
10A resistive @ 30Vdc
5A inductive @ 30Vdc
5A resistive @ 115 Vrms, 400 Hz
3A inductive @ 115 Vrms, 400 Hz

5A contacts —
5A resistive @ 30Vdc
1.5A inductive @ 30Vdc
3A resistive @ 115 Vrms, 400 Hz
1A inductive @ 115 Vrms, 400 Hz

2A contacts —
2A resistive @ 30Vdc
1A inductive @ 30Vdc
1A resistive @ 115 Vrms, 400 Hz
0.3A inductive @ 115 Vrms, 400 Hz

Specifications by Model Number

Fixed Timer Model Number	Adjustable Timer Model Number	Input Voltage	Temperature Range	Contact Rating	Contact Arrangement	Available Enclosures
5601	5701	DC	-55°C to +85°C	2 Amp	1 Form C (SPDT)	A - C - D - E
5602	5702	DC	-55°C to +85°C	2 Amp	2 Form C (DPDT)	A - C - D - E
5605	5705	DC	-55°C to +85°C	5 Amp	1 Form C (SPDT)	D - E
5606	5706	DC	-55°C to +85°C	5 Amp	2 Form C (DPDT)	D - E
5610	5710	DC	-55°C to +85°C	10 Amp	1 Form C (SPDT)	D - E
5611	5711	DC	-55°C to +85°C	10 Amp	2 Form C (DPDT)	D - E
5621	5721	DC	-55°C to +125°C	2 Amp	1 Form C (SPDT)	A - C - D - E
5622	5722	DC	-55°C to +125°C	2 Amp	2 Form C (DPDT)	A - C - D - E
5625	5725	DC	-55°C to +125°C	5 Amp	1 Form C (SPDT)	D - E
5626	5726	DC	-55°C to +125°C	5 Amp	2 Form C (DPDT)	D - E

See next page for complete ordering information and outline dimensions for the available enclosures.

Environmental Specifications

Temperature Range —
-55°C to +85°C or -55°C to +125°C

Vibration — 20 G's, 10 - 2,000 Hz

Shock — 50 G's, 11 ± 1ms duration

Insulation Resistance —
1,000 megohms, min., at 500Vdc

Dielectric Strength — 1,000Vrms, 60 Hz., at sea level, all terminals to case

Sealing — Hermetic, 1.3 in. (33.0mm) of mercury

Life — 100,000 operations, min. (2A and 5A models); 50,000 operations, min. (10A models)

Weight — 8.5 oz (240g) max.

Adjustable Timing Formula (4700 types)

The resistance required to obtain timing within this range is determined by using the formula:

Rx = 400K (T/Tmax.) – 40K, where

Rx = External Resistance in Ohms,
T - Desired Time in Seconds, and
Tmax. = Maximum Time (Code).

A high quality deposited carbon ±1%, 0.1W (min.) resistor is recommended for external resistance.

Timing Diagram

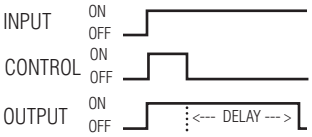

Apply input power. Upon application of control power, the output will energize. Remove control power and initiate delay period.

Special Notes

10Vdc minimum must be applied for a minimum duration of 20ms to energize output and initiate timing.

Units rated 10A have a minimum time delay of 100ms.

Catalog 5-1773450-5
Revised 3-13

www.te.com

Dimensions are shown for reference purposes only. Specifications subject to change.

Dimensions are in millimeters unless otherwise specified.

USA: +1 800 522 6752
Asia Pacific: +86 0 400 820 6015
UK: +44 800 267 666

For additional support numbers please visit www.te.com

5600/5700 Series Delay On Release Timers (Continued)

Part Numbering System

Typical Part Number	5722	–C	– 1102

Model Number:
Four digit code from table on the previous page.

Mounting (see outline dimension drawings):
A = Studs on bottom of 2.5 in tall case
C = Studs on side of 2.5 in. tall case
D = Studs on bottom of 1.812 in. tall case
E = Bracket on side of 1.812 in. tall case

Timing Code:
Four-digit code for any value between 50ms.

Note: Units with 10A contacts have a minimum time delay of 100ms.

A typical part number for an adjustable timer would be 5722–C–1102. This DC unit is in the -55°C to +125°C temperature range with a 2 amp contacts in a 2 form C (DPDT) arrangement, enclosed in case with a style "C" mounting, with a maximum time delay of 11s.

Outline Dimensions

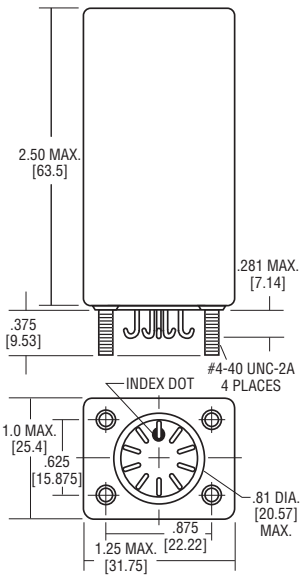

Mounting Option A

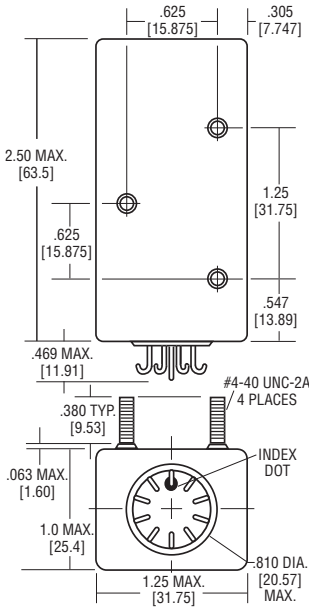

Mounting Option C

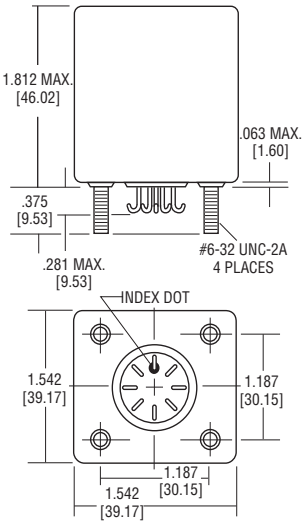

Mounting Option D

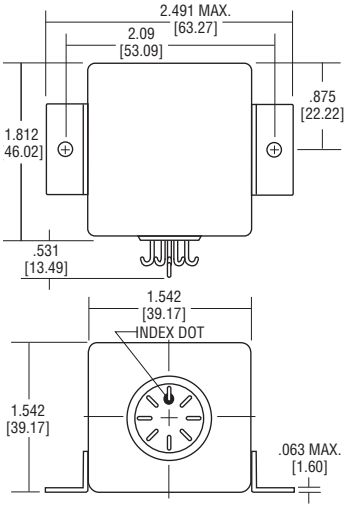

Mounting Option E

Wiring Diagrams

5600 Series (Fixed)

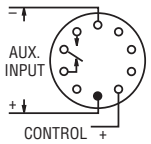

1 Form C

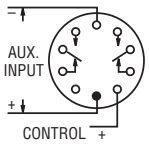

2 Form C

5700 Series (Adjustable)

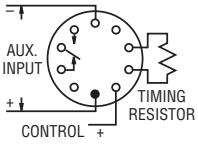

1 Form C

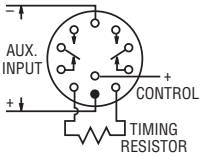

2 Form C

Catalog 5-1773450-5
Revised 3-13

www.te.com

Dimensions are shown for reference purposes only. Specifications subject to change.

Dimensions are in millimeters unless otherwise specified.

USA: +1 800 522 6752
Asia Pacific: +86 0 400 820 6015
UK: +44 800 267 666

For additional support numbers please visit www.te.com

1800/1900 Series Delay On Operate Digital Timing Modules

Product Facts

- **DC input delay on operate timer offered in fixed (1800) and adjustable (1900) types**
- **300mA output**
- **CMOS digital design**
- **Reverse polarity protection**
- **Hermetic package**
- **Built to MIL-R-83726 environmentals**
- **Customizing options include**
  - **Tighter timing tolerances**
  - **Header and mounting**

Electrical Specifications

Timing Range —
1800 series (fixed) — 50 ms to 600 s
1900 series (adjustable) — 50 ms to 240 s

Tolerance — ±10% or 10 ms, whichever is greater

Repeatability — ±0.1%

Recycle Time — 10 ms

Recovery Time — 20 ms

Input Data —

Input Voltage — 18 to 31Vdc

Current Drain (at 25°C, 28Vdc) — 10mA, plus load current

Output Data —

Output Form — 1 Form A (SPST-NO) solid state switch closure to ground

Output Rating — 300mA @ 25°C, 100mA @ 125°C

Minimum Load — 10mA

Saturation Voltage — 2.5Vdc, max.

Leakage — 1µA @ 25°C, 10µA @ 125°C

Environmental Specifications

Temperature Range —
-55°C to +85°C or -55°C to +125°C

Vibration — 20 G's, 10 - 2,000 Hz

Shock — 50 G's, 11 ± 1ms duration

Insulation Resistance — 1,000 megohms, min., at 500Vdc, all terminals to case

Dielectric Strength — 500Vrms, 60 Hz., at sea level, all terminals to case

Sealing — Hermetic, 1.3 in. (33.0mm) of mercury

Life — 100,000 operations, min.

Weight — 1 oz (28.3g) max

Timing Diagram

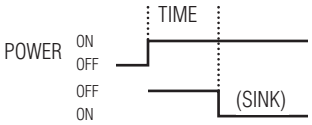

Kilovac 1800/1900 series delay on operate timer modules combine solid state timing circuits with solid state switch outputs in robust hermetically sealed enclosures. The 1800 types are fixed timers, while the 1900 models are adjustable via an external resistor. The 1 Form A (SPST-NO) switch is rated 300mA.

Adjustable Timing Formula (1900 types)

The resistance required to obtain timing within this range is determined by using the formula:

Rx = 400K (T/Tmax.) – 40K, where

Rx = External Resistance in Ohms,
T - Desired Time in Seconds, and
Tmax. = Maximum Time (Code).

A high quality deposited carbon ±1%, 0.1W (min.) resistor is recommended for external resistance.

Part Numbering System

Typical Part Number | **1811** | **–1** | **A** | **– 1002**

Model Number:
1811 = Fixed timer, -55°C to +85°C
1821 = Fixed timer, -55°C to +125°C
1911 = Adjustable timer, -55°C to +85°C
1921 = Adjustable timer, -55°C to +125°C

Header Style (see Header Options drawings):
1 = Hook terminals 2 = Straight terminals

Mounting (see outline dimension drawings):
A = Plain case B = Bracket B C = Studs on side E = Bracket E

Timing Code:
Four-digit code for any value between 50ms and 600s for fixed (1800) timers, and 50ms and 240s for adjustable (1900) timers.

The timing code consists of four digits and gives the time in ms. The first three digits are the significant figures and the last digit is the number of zeros following the significant figures; thus 50 ms would be coded 0500, 1.1 s would read 1101, and 1 m (60 s) would be 6002.

Adjustable timers cover one decade, e.g., 62 ms to 620 ms. The upper decade limit is Tmax. in the timing formula and is the the value defined by the timing code in the part number.

A typical part number would be 1811–1A–1002. This fixed timing module operates at -55°C to +85°C, has hook terminals, style "A" mounting, and a time delay of 10s.

Outline Dimensions

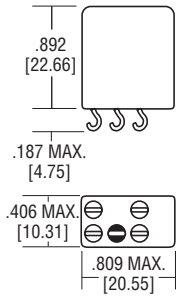

Mounting Option A

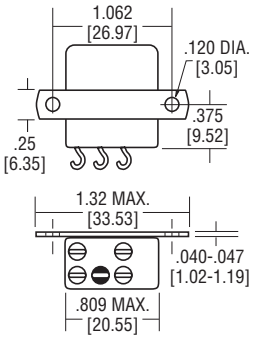

Mounting Option B

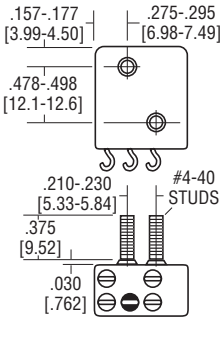

Mounting Option D

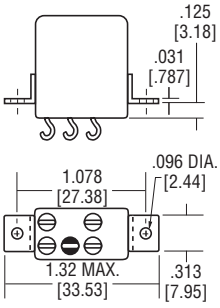

Mounting Option E

Wiring Diagrams

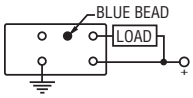

1800 Series (Fixed)

Note: The blank pin on 1800 series types is active and must not be connected.

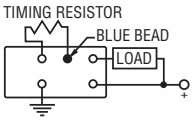

1900 Series (Adjustable)

Header Options

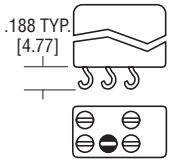

Header Option 1

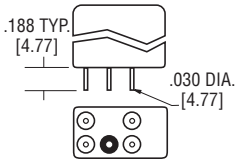

Header Option 2

TERMINAL SPACING IS 0.2 in [5.08]

Catalog 5-1773450-5
Revised 3-13

www.te.com

Dimensions are shown for reference purposes only. Specifications subject to change.

Dimensions are in millimeters unless otherwise specified.

USA: +1 800 522 6752
Asia Pacific: +86 0 400 820 6015
UK: +44 800 267 666

For additional support numbers please visit www.te.com

6001 Series Delay On Operate Digital Timing Module

Product Facts

- **Fixed delay on operate timer**
- **300mA output**
- **CMOS digital design**
- **Voltage surge protection**
- **Qualified to MIL-R-83726/13**

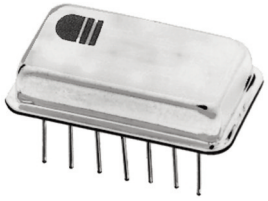

Electrical Specifications

Timing Range — 50 ms to 600 s.

Timing Accuracy — ±10% of nominal timing under all conditions of input voltage and environmental extremes

Recycle Characteristics —

Before Time Out — A power interruption occurring after the start but before completion of the timing cycle shall be for a duration of 0.5% of the nominal time delay or 10ms, whichever is greater, to ensure a loss in timing of no greater than 10%

After Time Out — A power interruption of 0.5% of the nominal time delay or 10ms, whichever is greater, will initiate a new timing cycle with a loss in timing of no greater than 5%

Input Data —

Input Voltage — 28Vdc, nominal; range 18 to 31Vdc

Current Drain (at 25°C, 28Vdc) — 10mA (max.), plus load current

Reverse Polarity Protection — The timer will not be damaged or operate when input voltage polarity is reversed

Output Data —

Configuration — 1 Form A (SPST-NO) solid state switch closure to ground

Load Ratings —

Resistive — 300mA @ +25°C, derated to 100mA @ +125°C

Inductive — Three MIL-R-5757/9 relays (any relay with 26.5Vdc coil)

Lamp Load — Two MS25237-327 lamps per MIL-L-6363

Load Suppression — Suppression for inductive loads for output protection is provided within the unit

Voltage Drop — 2.5Vdc, max. @ -55°C and +25°C; 2.0 Vdc, max., @ +125°C

Leakage Current — 1µA, max. @ +25°C, 10µA, max. @ +125°C

Insulation Resistance — 1,000 megohms, min., @ 500Vdc, measured between all terminals tied together to the case

Dielectric Strength — 500Vrms, 60 Hz., at sea level, measured between all terminals tied together to the case

Transients —

Voltage Surge — Per MIL-STD-704A, figure 9, limit 1, for category B equipment

Self-generated Spikes — ±10V

Kilovac 6001 series delay on operate timer modules are miniature devices combining solid state timing circuits with solid state switch outputs in robust hermetically sealed DIP enclosures. The 1 Form A (SPST-NO) switch is rated 300mA.

Timing Diagram

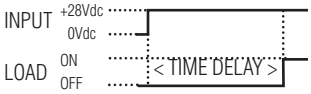

Part Numbering System

Typical Part Number	6001	–6002	C

Model Number:
6001 = Fixed timer, -55°C to +125°C

Timing Code:
Four-digit code for any value between 50ms and 600s.

The timing code consists of four digits and gives the time in ms. The first three digits are the significant figures and the last digit is the number of zeros following the significant figures; thus 50 ms would be coded 0500, 1.1 s would read 1101, and 1 m (60 s) would be 6002.

Optional Suffix:
C = Commercial version equivalent to M83726/13.

A typical part number would be 6001–6002C. This solid state output timing module has a time delay of 60s at 28Vdc and is the commercial equivalent to M83726/13.

Environmental Specifications

Temperature Range — -55°C to +125°C

Altitude — 80,000 ft.

Shock — 150 G's, 11 ± 1ms half-sine wave

Vibration (sinusoidal) — 10 -80 Hz. at 0.06 inch DA; 80 - 3,000 Hz. at 20 G's

Sealing — MIL-STD-202, method 112, condition C

Materials:

Cover — Nickel

Header — Kovar® Alloy

Pins — Kovar® Alloy, gold plated

Marking — Per MIL-R-83726

Weight — 0.42 oz (12g) max.

Outline Dimensions

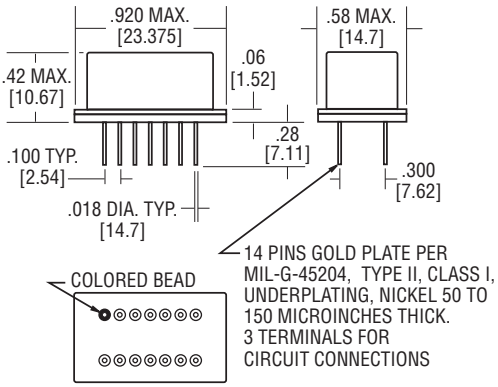

Wiring Diagram

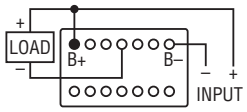

PIN 10 IS ACTIVE. DO NOT CONNECT.

Special Notes:

- Load is connected between B+ and terminal designated. Delay begins upon application of power to terminals (B+ and B–).
- Always consult latest military specification for changes and additional information.

KOVAR is a trademark of Carpenter Technology Corporation.

Catalog 5-1773450-5
Revised 3-13

www.te.com

Dimensions are shown for reference purposes only. Specifications subject to change.

Dimensions are in millimeters unless otherwise specified.

USA: +1 800 522 6752
Asia Pacific: +86 0 400 820 6015
UK: +44 800 267 666

For additional support numbers please visit www.te.com

2600 Series Flasher/Repeat-Cycle, Timer-Fixed, Solid State Output

Product Facts

- **All solid-state**
- **Digital timing**
- **Reverse polarity protection**
- **Transient/surge protection**

Electrical Specifications

Timing Range —
"On" Time (.05 to 600 SEC)
"Off" Time (.05 to 600 SEC)

Duty Cycle — D.C. = $\frac{\text{T on}}{\text{T on \& T off}}$

Frequency — f = $\frac{1}{\text{T on \& T off}}$
(Flash rate)

Tolarance — ±10%

Repeatability — ±0.1%

Input Data —
Input Voltage — 18 to 31 V dc
Current Drain — 30 ma @ 28 V dc

Output Data —
Output — 28 V dc
Vin (dc) — 1.5 V dc @ 100 ma
Load — 30 ma max.

Environmental Specifications

Operature Temperature —
-55°C to +125°C

Vibration — 20 G's, 10 - 2,000 Hz

Shock — 50 G's, 11 ± 1 milliseconds duration

Insulation Resistance — 1,000 megohms at 500 Vdc

Dielectric Strength — 1,000 Vrms, 60 Hz., at sea level. All terminals tied together to case

Sealing — Hermetic, 1.3 in. (33.0mm) mercury

Life — over 1,000,000 operations

Weight — 8 oz (200g) max.

Applications

The Hi-G Series 2600 Flasher can be used wherever warning or indicating light, navigation or position lights, panel or control lights must be operated with a maximum of reliability in severe environments. The Series 2600 can also be used to interrupt Tone Generators or other Signaling Devices at a predetermined frequency.

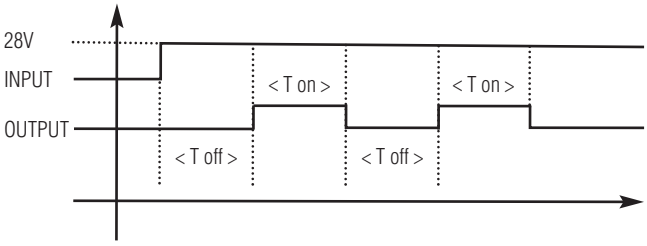

- Higher output rating
- Output sink to ground
- Control line
- AC operation
- Adj. "on" and "off" time
- Relay output to 10 amps
- Alternate packaging
- Initial cycle "on"
- Extended timing ranges

How to Order

Series	Initial Timing Cycle
2601	Off
2602	On

The part number consists of four elements. The series number, a letter signifying mounting style and the timing code numbers. The first timing is the "ON" time and the second is "OFF" time. The timing code number consists of four digits and gives the time in milliseconds. The first three digits are the significant figures and the last digit is the number of zeros following the significant figures, thus, 50 milliseconds would be coded 0500. 1.1 seconds would read 1101, and 1 minute (60 seconds) would be 6002.

Example: HI-G Part Number

2601 — A — 2001 — 1001

- 1001 — "OFF" time in milliseconds
- 2001 — "ON" time in milliseconds
- A — Mounting style
- 2601 — Series

Catalog 5-1773450-5
Revised 3-13

www.te.com

Dimensions are shown for reference purposes only. Specifications subject to change.

Dimensions are in millimeters unless otherwise specified.

USA: +1 800 522 6752
Asia Pacific: +86 0 400 820 6015
UK: +44 800 267 666

For additional support numbers please visit www.te.com

4600/4700 Series Interval Timers

Product Facts

- **AC/DC input interval timer offered in fixed (4600) and adjustable (4700) types**
- **Up to 10A loads**
- **Reverse polarity protection**
- **Hermetic package**
- **Built to MIL-R-83726 environmentals**
- **Many customizing options**
  - **Extended timing ranges**
  - **Tighter timing tolerances**
  - **Header and mounting**
  - **115Vac, 60 Hz. input types**

Kilovac 4600/4700 series interval timers combine solid state timing circuits with electromechanical output relays in robust hermetically sealed enclosures.

The 4600 types are fixed timers, while the 4700 models are adjustable via an external resistor. Numerous output options include 4A rated contacts in 1, 2 and 4 form C (SPDT, DPDT and 4PDT) arrangements and 10A rated contacts in 1-2 form C (SPDT-DPDT) arrangements.

Electrical Specifications

Timing Range —
4600 series (fixed) — 100 ms to 600 s
4700 series (adjustable) — 100 ms to 240 s

Tolerance — ±10%

Recycle Time — 10 ms (DC input), 50ms (AC input)

Operate Time (Max.) — 10 ms (4A models), 20ms (10A models)

Input Voltage — 18 to 31Vdc, 105 to 125Vac, 400 Hz

Current Drain (at 25°C, 28Vdc) —
DC Coil, 10A contacts —
1- and 2-pole — 135mA maximum

AC or DC Coil, 4A contacts —
1-pole — 100mA maximum
2-pole — 150mA maximum
3- and 4-pole — 200mA maximum

Contact Ratings —
DC Coil, 10A contacts —
10A resistive @ 30Vdc
5A inductive @ 30Vdc
5A resistive @ 115 Vrms, 400 Hz
3A inductive @ 115 Vrms, 400 Hz

AC or DC Coil, 4A contacts —
4A resistive @ 30Vdc
1A inductive @ 30Vdc
2A resistive @ 115 Vrms, 400 Hz
1A inductive @ 115 Vrms, 400 Hz

Environmental Specifications

Temperature Range —
-55°C to +125°C

Vibration — 20 G's, 10 - 2,000 Hz

Shock — 50 G's, 11 ± 1ms duration

Insulation Resistance — 1,000 megohms, min., at 500Vdc

Dielectric Strength — 1,000Vrms, 60 Hz., at sea level, all terminals to case

Sealing — Hermetic, 1.3 in. (33.0mm) of mercury

Life — 100,000 operations, min. (4A models); 50,000 operations, min. (10A models);

Weight —
4A units — 4.5 oz (127.6g) max.
10A units — 8.5 oz (240g) max.

Specifications by Model Number – 4 Amp Contact Versions

Fixed Timer Model Number	Adjustable Timer Model Number	Input Voltage	Temperature Range	Contact Rating	Contact Arrangement
4610	4710	DC	-55°C to +125°C	10 Amp	1 Form C (SPDT)
4611	4711	DC	-55°C to +125°C	10 Amp	2 Form C (DPDT)
4621	4721	DC	-55°C to +125°C	4 Amp	1 Form C (1PDT)
4622	4722	DC	-55°C to +125°C	4 Amp	2 Form C (DPDT)
4624	4724	DC	-55°C to +125°C	4 Amp	4 Form C (4PDT)
4671	4771	AC	-55°C to +125°C	4 Amp	1 Form C (SPDT)
4672	4772	AC	-55°C to +125°C	4 Amp	2 Form C (DPDT)
4674	4774	AC	-55°C to +125°C	4 Amp	4 Form C (4PDT)

Timing Diagram

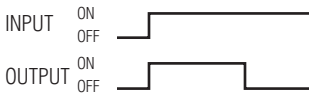

Apply power and the output will energize. After time-out, the output will revert to de-energized state. Remove and reapply input to cycle.

Adjustable Timing Formula (4700 types)

The resistance required to obtain timing within this range is determined by using the formula:

Rx = 400K (T/Tmax.) – 40K, where

Rx = External Resistance in Ohms,
T - Desired Time in Seconds, and
Tmax. = Maximum Time (Code).

A high quality deposited carbon ±1%, 0.1W (min.) resistor is recommended for external resistance.

Part Numbering System

Typical Part Number **4722** **–C** **– 1102**

Model Number:
Four digit code from table above.

Mounting (see outline dimension drawings):
A = Studs on bottom B = Studs on top C = Studs on side

Timing Code:
Four-digit code for any value between 100ms and 600s for fixed (4600) timers, and 100ms and 240s for adjustable (4700) timers.

The timing code consists of four digits and gives the time in ms. The first three digits are the significant figures and the last digit is the number of zeros following the significant figures; thus 50 ms would be coded 0500, 1.1 s would read 1101, and 1 m (60 s) would be 6002.

Adjustable timers cover one decade, e.g., 62 ms to 620 ms. The upper decade limit is Tmax. in the timing formula and is the the value defined by the timing code in the part number.

A typical part number for an adjustable timer would be 4722–C–1102. This is a DC unit in the -55°C to +125°C temperature range with a 2 form C (DPDT) contact arrangement in a style "C" mounting, with a maximum time delay of 11s.

Catalog 5-1773450-5
Revised 3-13

www.te.com

Dimensions are shown for reference purposes only. Specifications subject to change.

Dimensions are in millimeters unless otherwise specified.

USA: +1 800 522 6752
Asia Pacific: +86 0 400 820 6015
UK: +44 800 267 666

For additional support numbers please visit www.te.com

4600/4700 Series Interval Timers (Continued)

Outline Dimensions

10 Amp Units

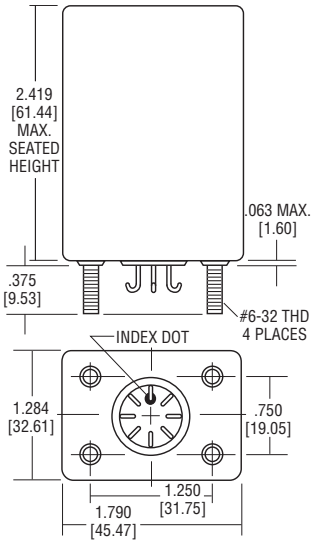

Mounting Option A

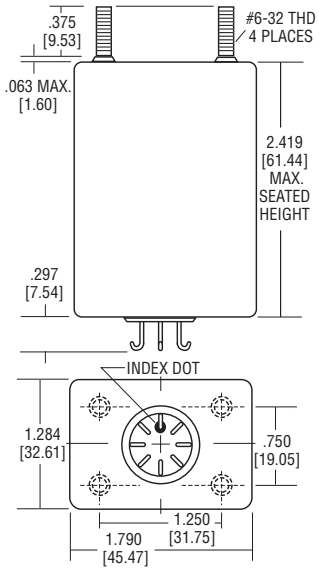

Mounting Option B

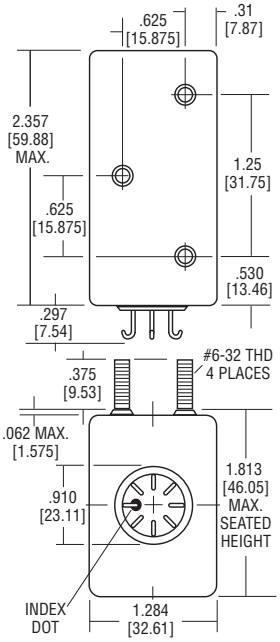

Mounting Option C

4 Amp Units

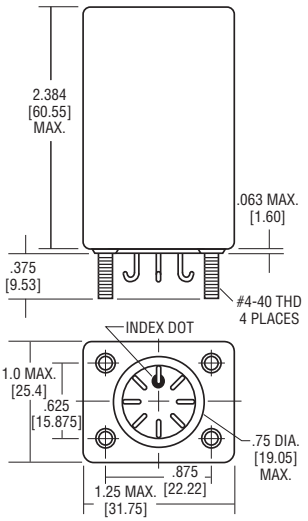

Mounting Option A

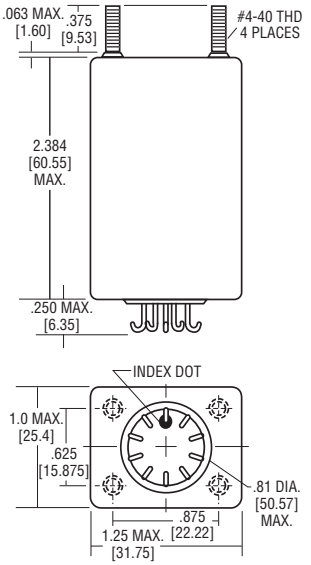

Mounting Option B

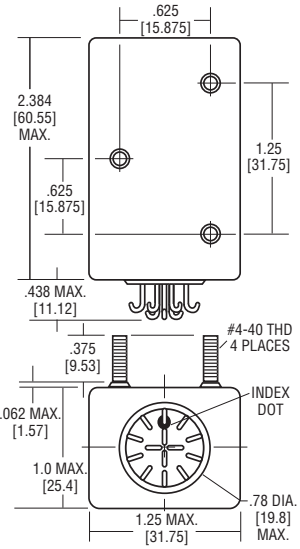

Mounting Option C

Wiring Diagrams

4600 Series (Fixed)

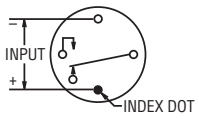

1 Form C

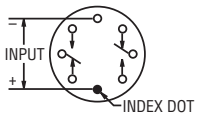

2 Form C

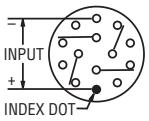

3 Form C

4700 Series (Adjustable)

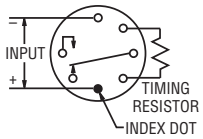

1 Form C

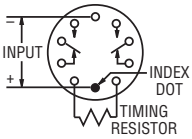

2 Form C

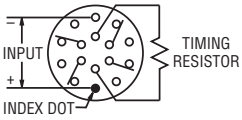

3 Form C

Catalog 5-1773450-5
Revised 3-13

www.te.com

Dimensions are shown for reference purposes only. Specifications subject to change.

Dimensions are in millimeters unless otherwise specified.

USA: +1 800 522 6752
Asia Pacific: +86 0 400 820 6015
UK: +44 800 267 666

For additional support numbers please visit www.te.com

4800 Series Interval Timer, Fixed Timing, Solid State Output

Product Facts

- **DC input fixed delay interval timer**
- **1 Form A (SPST-NO), 500mA output**
- **CMOS digital design**
- **Reverse polarity protection**
- **Hermetic package**
- **Built to MIL-R-83726 environmentals**
- **Customizing options include**
  - **Adjustable timing**
  - **Tighter timing tolerances**
  - **Header and mounting**
  - **Relay output**
  - **AC input**

Kilovac 4800 series interval timers combine solid state timing circuits with solid state outputs in robust hermetically sealed enclosures. They are fixed timers. The 1 Form A (SPST-NO) output switch is rated 500mA.

Electrical Specifications

Timing Range: 100 s. to 600 s.

Tolerance: ±10%.

Repeatability: ±2%.

Recycle Time: 0.5% of Max. Delay.

Input Data:

Input Voltage: 18 to 31Vdc.

Current Drain: 40mA. max.

Output Data:

Output Form: 1 Form A (SPST-NO).

Output Rating:
500mA @ +25°C;
200mA @ +125°C.

Saturation Voltage:
1.0V, 500mA (25°C).

Leakage:
10µA (125°C).

Environmental Specifications

Temperature Range:
-55°C to +85°C or -55°C to +125°C.

Vibration: 20 G's, 10 - 2,000 Hz.

Shock: 50 G's, 11 ± 1ms duration.

Insulation Resistance: 1,000 megohms, min., at 500Vdc.

Dielectric Strength: 500Vrms, 60 Hz., at sea level, all terminals to case.

Sealing: Hermetic, 1.3 in. (33.0mm) of mercury.

Life: Over 1 million operations.

Weight: 2 oz (50g) max.

Plug-in sockets are available

Timing Diagram

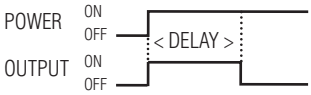

Apply power and the output will energize After time-out, the output will revert to de-energized state. Remove and reapply power to recycle.

Part Numbering System

Typical Part Number | **4801** | **–1** | **A** | **– 1102**

Model Number:
4801 = Fixed timer, -55°C to +85°C
4851 = Fixed timer, -55°C to +125°C

Header Style (see Header Options drawings):
1 = Hook terminals 2 = Straight terminals, short
3 = Straight terminals, long

Mounting (see outline dimension drawings):
A = Plain case B = Bracket B C = Studs on side E = Bracket E

Timing Code:
Four-digit code for any value between 50ms and 600s.

The timing code consists of four digits and gives the time in ms. The first three digits are the significant figures and the last digit is the number of zeros following the significant figures; thus 50 ms would be coded 0500, 1.1 s would read 1101, and 1 m (60 s) would be 6002.

A typical part number would be 4801–1A–1102. This fixed timer operates at -55°C to +85°C, has hook terminals, style "A" mounting, and a time delay of 11s.

Outline Dimensions

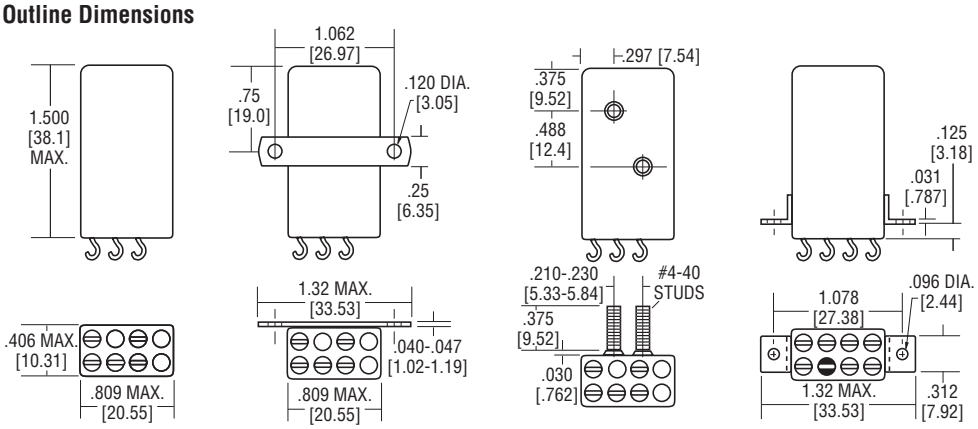

Mounting Option A **Mounting Option B** **Mounting Option D** **Mounting Option E**

Wiring Diagram

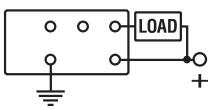

Header Options

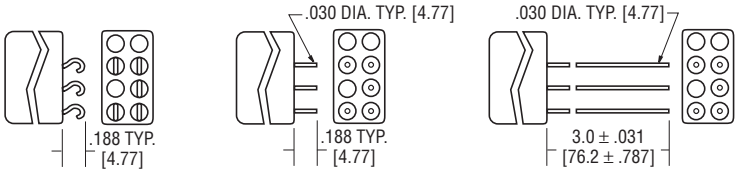

TERMINAL SPACING IS 0.2 [5.08] FOR ALL HEADERS

Header Option 1 **Header Option 2** **Header Option 3**

Catalog 5-1773450-5
Revised 3-13

www.te.com

Dimensions are shown for reference purposes only. Specifications subject to change.

Dimensions are in millimeters unless otherwise specified.

USA: +1 800 522 6752
Asia Pacific: +86 0 400 820 6015
UK: +44 800 267 666

For additional support numbers please visit www.te.com

Table of Contents

1310 Series DC Voltage Sensors 9-2
1350 Series AC Voltage Sensors 9-3
1400 Series Phase Sensors 9-4, 9-5
7000 Series Frequency Sensors 9-6

Catalog 5-1773450-5
Revised 3-13

www.te.com

Dimensions are shown for reference purposes only. Specifications subject to change.

Dimensions are in millimeters unless otherwise specified.

USA: +1 800 522 6752
Asia Pacific: +86 0 400 820 6015
UK: +44 800 267 666

For additional support numbers please visit www.te.com

1310 Series DC Voltage Level Sensor, Relay Output

Product Facts

- **Standard models combine DC voltage-sensing circuit with 2A DPDT output relay**
- **Various applications**
  - **Battery protection**
  - **Computer protection**
  - **Low or high voltage alarms**
- **Many customizing options**
  - **Solid state output**
  - **Two-stage sensing (voltage band)**
  - **Up to 10A relay output**
  - **Controlled dropout differential**
  - **Operate with auxiliary control voltage**
  - **Time delay on trip point**
  - **Tighter accuracy**
  - **Different package, mounting, header**

The Kilovac 1310 series DC voltage sensor is essentially a voltage monitoring device operating a snap-action transistor circuit with low drift and inherent temperature compensation. This device will either open or close a circuit when a predetermined voltage is present at the input. By using a Kilovac electromechanical relay as the output of the voltage sensor, a positive switching action can be achieved with very close differential between pull-in and drop-out voltages. The unit is potted and hermetically sealed and is designed to meet the environmental requirements of MIL-R-83726.

Electrical Specifications

Pull-In Voltage — Any voltage level between 10 to 150Vdc

Drop-Out Voltage — 0 to 0.5V below pull-in voltage

Current Drain — 15mA max @ 25°C

Accuracy — ±2.5% of set point over temperature range

Max. Allowable Applied Voltage — 150% of specified pull-in voltage

Auxiliary Voltage — None required

Operate and Release Times — 50ms max. over the temperature range

Contact Arrangement — 2 Form C (DPDT)

Contact Rating —
2 amps resistive @ 30Vdc
300mA resistive @ 115 Vrms, 400 Hz

Outline Dimensions

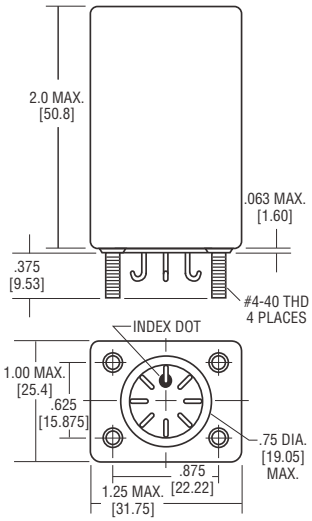

Mounting Option A

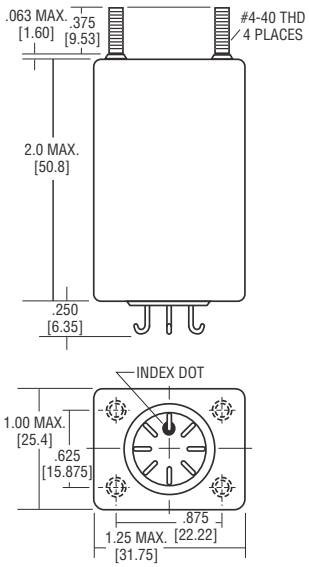

Mounting Option B

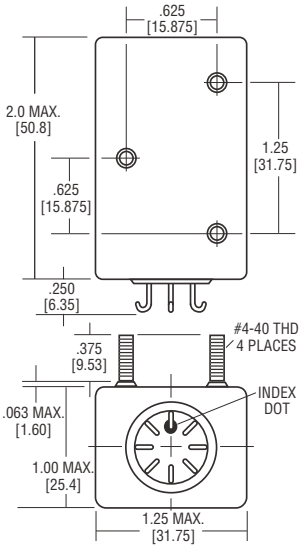

Mounting Option C

Environmental Specifications

Temperature Range —
-55°C to +125°C

Vibration — 20 G's, 10 - 2,000 Hz

Shock — 50 G's, 11 ± 1ms duration

Insulation Resistance — 1,000 megohms, min., at 500Vdc, all terminals to case

Dielectric Strength — 1,000Vrms, 60 Hz., at sea level, all terminals to case

Sealing — Hermetic, 1.3 in. (33.0mm) of mercury

Life — 100,000 operations, min.

Weight — 3.5 oz (99.2g) max.

Wiring Diagram

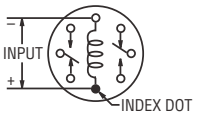

Part Numbering System

Typical Part Number	1310	- 2	A	- 24.5

Series:
1310 = DC Voltage Level Sensor, Relay Output

Contact Form:
2 = 2 Form C (DPDT)

Mounting (see outline dimension drawings):
A = Studs on bottom B = Studs on top C = Studs on side

Pull-In Voltage:
Specify any level between 10 and 150Vdc

Catalog 5-1773450-5
Revised 3-13

www.te.com

Dimensions are shown for reference purposes only. Specifications subject to change.

Dimensions are in millimeters unless otherwise specified.

USA: +1 800 522 6752
Asia Pacific: +86 0 400 820 6015
UK: +44 800 267 666

For additional support numbers please visit www.te.com

1350 Series AC Voltage Level Sensor, Relay Output

Product Facts

- **Standard models combine AC (400 Hz.) voltage-sensing circuit with 2A DPDT output relay**
- **Various applications**
  - **Motor protection**
  - **Ground support equipment**
  - **Low or high line alarms**
  - **Computer protection**
- **Many customizing options**
  - **Solid state output**
  - **Two-stage sensing (voltage band)**
  - **Up to 10A relay output**
  - **3 phase version**
  - **Controlled dropout differential**
  - **Operate with auxiliary control voltage**
  - **Under and over voltage trip**
  - **Time delay on trip point**
  - **Tighter accuracy**
  - **Lower trip points**
  - **Different package, mounting, header**
  - **60 Hz. versions**

Electrical Specifications

Pull-In Voltage — Any voltage level between 50 to 150Vac, 400 Hz., in 1.0 volt increments

Drop-Out Voltage — 0 to 3.0V max, (1.5V nom.) below pull-in voltage

Current Drain — 100mA max @ 25°C

Accuracy — ±2.5% of set point over temperature range

Max. Allowable Applied Voltage — 150% of specified pull-in voltage

Auxiliary Voltage — None required

Operate and Release Times — 50ms max. over the temperature range

Contact Arrangement — 2 Form C (DPDT)

Contact Rating — 2 amps resistive @30Vdc 300mA resistive @ 115 Vrms, 400 Hz

Environmental Specifications

Temperature Range — -55°C to +125°C

Vibration — 20'G,s, 10 - 2,000 Hz

Shock — 50 G's, 11 ± 1ms duration

Insulation Resistance — 1,000 megohms, min., at 500Vdc, all terminals to case

Dielectric Strength — 1,000Vrms, 60 Hz., at sea level, all terminals to case

Sealing — Hermetic, 1.3 in. (33.0mm) of mercury

Life — 100,000 operations, min.

Weight: 3.5 oz (99.2g) max.

The Kilovac 1350 series AC voltage sensor energizes a relay when the monitored power line voltage reaches a predetermined level. This rugged unit with reliable solid-state design provides precise, repeatable operation over a wide temperature range. The input voltage is fed into a temperature compensated comparator circuit. When the input reaches the preset level, transistor amplifiers switch the output relay. This output may control any external devices, process or warning system to protect expensive equipment. The unit is potted and hermetically sealed and is designed to meet the environmental requirements of MIL-R-83726.

Outline Dimensions

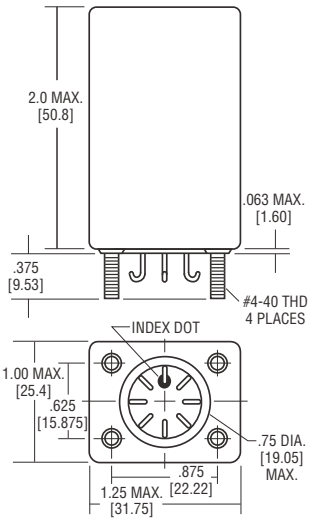

Mounting Option A

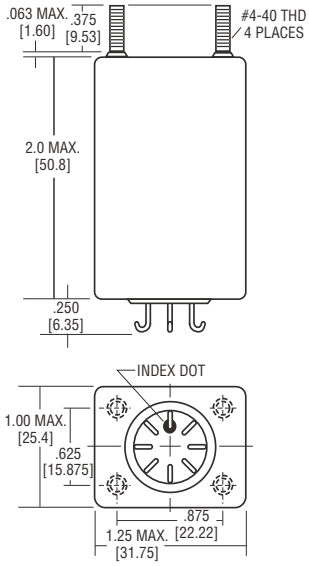

Mounting Option B

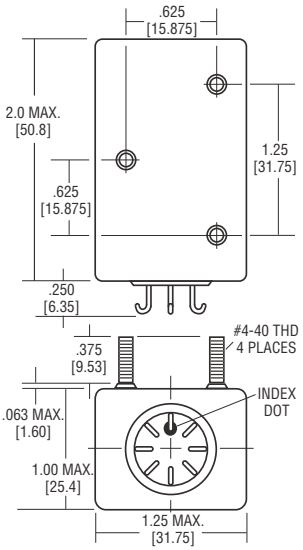

Mounting Option C

Wiring Diagram

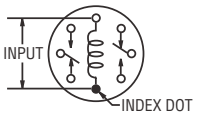

Part Numbering System

Typical Part Number	1350	- 2	A	- 100.0

Series:
1350 = AC Voltage Level Sensor, Relay Output

Contact Form:
2 = 2 Form C (DPDT)

Mounting (see outline dimension drawings):
A = Studs on bottom B = Studs on top C = Studs on side

Pull-In Voltage:
Specify any level between 50 and 150Vac in 1.0 volt increments

Catalog 5-1773450-5
Revised 3-13

www.te.com

Dimensions are shown for reference purposes only. Specifications subject to change.

Dimensions are in millimeters unless otherwise specified.

USA: +1 800 522 6752
Asia Pacific: +86 0 400 820 6015
UK: +44 800 267 666

For additional support numbers please visit www.te.com

1400 Series Phase Sensor 115 or 208Vac, 60 or 400 Hz., Relay Output

Product Facts

- **Phase sensor for 115 or 208Vac, 60 or 400 Hz**
- **Up to 2A loads**
- **Static and motor load types**
- **Hermetic package**
- **Built to MIL-R-83726 environmentals**
- **Various applications**
  - **Motor protection**
  - **Brown-out protection**
  - **Power supply sequencing**
  - **Air conditioner protection**
  - **Ground support equipment protection**
- **Many customizing options**
  - **50 Hz. input types**
  - **Contact ratings to 10A**
  - **Higher voltages**
  - **Different packages, headers and mounting**

Kilovac 1400 series phase sensors combine solid state sensing circuits with electromechanical output relays in robust hermetically sealed enclosures.

P-Type models are for static loads. With the line voltage and frequency are within operating limits, P-Type units will energize only when input phases are in sequence A-B-C. They will de-energize only when power is removed. The P-Type unit is best suited to applications where static loads are used and where regenerated voltage will not be present if a phase opens.

Q-Type units perform the same function as the P-Type since they will energize only when input phases are in sequence A-B-C. In addition, the Q-Type unit will de-energize when any phase is disconnected or grounded, provided the voltage input to the unit is below 50% of the nominal phase-to-phase voltage input. Q-Type units are suitable for motor loads where regenerated voltage is produced.

Neither P-Type nor Q-Type units require connection to the neutral leg.

For high-current applications, phase sensors are used with slave relays having heavy duty contact ratings.

Electrical Specifications

Input Data —
Voltage — 115 or 208Vac
Frequency — 60 or 400 Hz

Operate Time (Max.) — 75 ms

Release Time (Max.) — 100 ms

Contact Arrangement — 1 Form C (SPDT)

Contact Ratings —
2A resistive @ 30Vdc
0.5A inductive @ 30Vdc
0.25A resistive or inductive @ 115 Vrms, 60 or 400 Hz

Environmental Specifications

Temperature Range —
-55°C to +85°C

Vibration — 20 G's, 10 - 2,000 Hz

Shock — 50 G's, 11 ± 1ms duration

Insulation Resistance — 1,000 megohms, min., at 500Vdc

Dielectric Strength — 1,000Vrms, 60 Hz., at sea level, all terminals to case

Sealing — Hermetic, 1.3 in. (33.0mm) of mercury

Life — 100,000 operations, min.

Weight — 12 oz (340g) max.

Specifications by Model Number

Fixed Timer Model Number	Load Type	Line to Line Voltage ±10%	Frequency ±10%	Max. Power Required	Mounting Style Figure
1407	P	115V	60 Hz.	4 Watts	3
1408	P	115V	400 Hz.	4 Watts	1 or 3
1409	P	208V	60 Hz.	6 Watts	3
1410	P	208V	400 Hz.	6 Watts	3
1437	Q	115V	60 Hz.	6 Watts	2
1438	Q	115V	400 Hz.	6 Watts	3
1439	Q	208V	60 Hz.	9 Watts	4
1440	Q	208V	400 Hz.	9 Watts	4

Typical Applications Connections

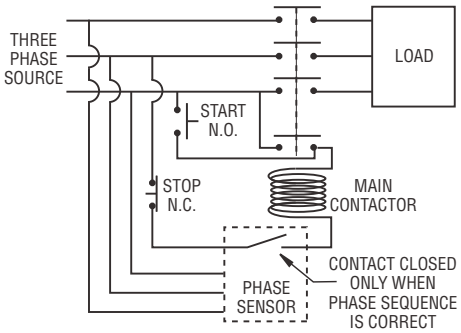

Wiring Diagram

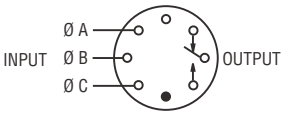

Part Numbering System

Typical Part Number — **1408** **–1** **A**

Model Number:
Four digit code from table above.

Output:
1 = 1 Form C (SPDT)

Mounting (see outline dimension drawings):
A = Studs on bottom B = Studs on top, except bracket on bottom for 1439 and 1440 C = Studs on side

A typical part number would be 1408–1A. This is a 115Vac, 400 Hz., "P" type phase sensor with a 1 form C (SPDT) contact arrangement in a style "A" mounting.

Catalog 5-1773450-5
Revised 3-13

www.te.com

Dimensions are shown for reference purposes only. Specifications subject to change.

Dimensions are in millimeters unless otherwise specified.

USA: +1 800 522 6752
Asia Pacific: +86 0 400 820 6015
UK: +44 800 267 666

For additional support numbers please visit www.te.com

1400 Series Phase Sensor 115 or 208Vac, 60 or 400 Hz., Relay Output (Continued)

Outline Dimensions

Figure 1
Applicable to 1408

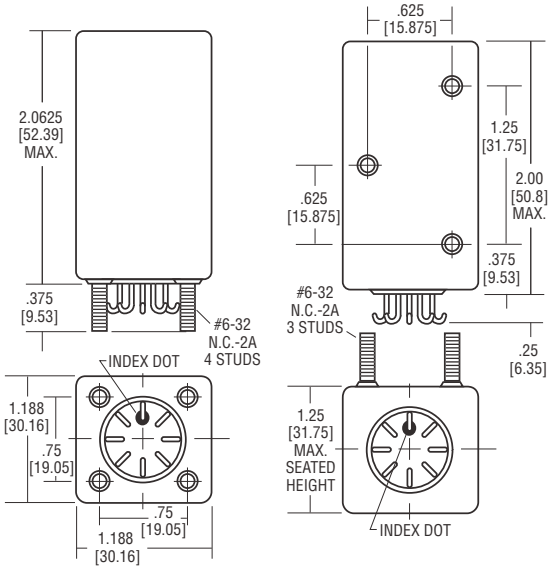

Mounting Option A **Mounting Option C**

Figure 2
Applicable to 1437

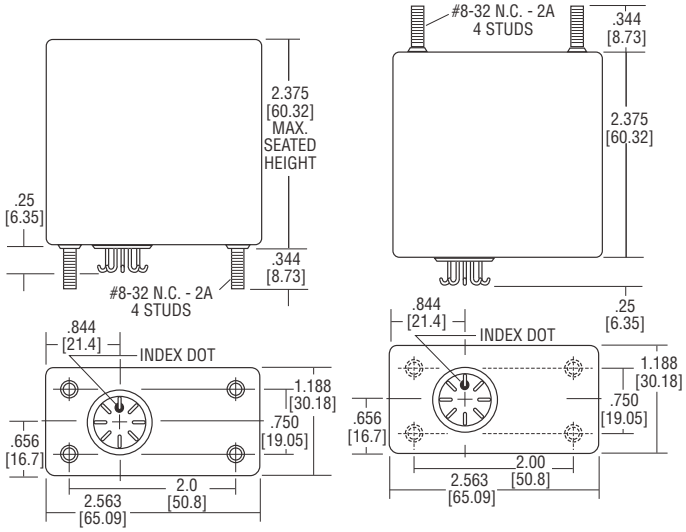

Mounting Option A **Mounting Option B**

Figure 3
Applicable to 1407, 1409, 1410, 1438 and 1408 "B" revision only

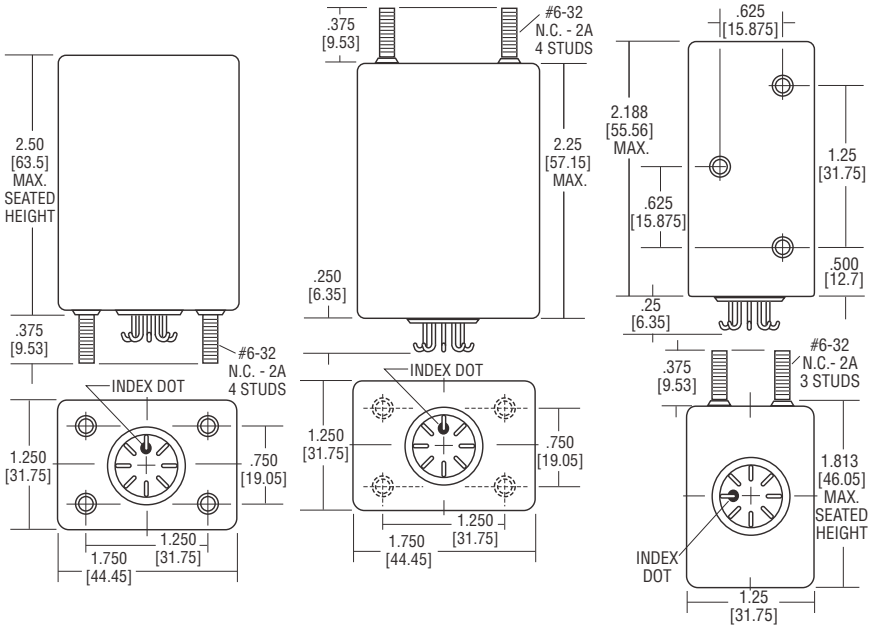

Mounting Option A **Mounting Option B** **Mounting Option C**

Figure 4
Applicable to 1439 and 1440

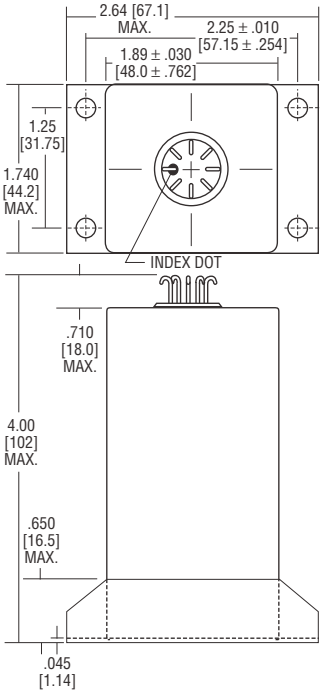

Mounting Option B

Catalog 5-1773450-5
Revised 3-13

www.te.com

Dimensions are shown for reference purposes only. Specifications subject to change.

Dimensions are in millimeters unless otherwise specified.

USA: +1 800 522 6752
Asia Pacific: +86 0 400 820 6015
UK: +44 800 267 666

For additional support numbers please visit www.te.com

7000 Series Frequency Sensor

Product Facts

- **320 to 480 Hz. frequency sensor**
- **1 or 2 Form C (SPDT or DPDT) contacts**
- **Hermetic package**
- **Many customizing options**
  - **50 or 60 Hz. Sensing**
  - **Dual trip points**
  - **Tighter accuracy**
  - **Enclosures**
  - **Higher temperature range**
  - **Up to 4 Form C (4PDT)**
  - **10A contacts**

Kilovac 7000 series frequency sensor utilizes an integrated circuit digital logic design to determine, cycle by cycle, whether a given input signal is within a predetermined frequency pass band. Typical application is in monitoring MIL-STD-704 power systems.

Part Numbering System

Typical Part Number	7000	–2	B	– 380

Model Number:
7000 - Frequency Sensor.

Contact Arrangement:
1 = 1 Form C (SPDT) 2 = 2 Form C (DPDT)

Mounting (see outline dimension drawings):
A = Studs on bottom B = Studs on top C = Studs on side

Frequency Trip Point:
Three-digit code for any value between 320 Hz. and 480 Hz.

A typical part number would be 7000-2B-380. This would be a sensor with a 2 form C (DPDT) contact arrangement in a style "C" mounting, with a 380 Hz. trip point for -55°C to +85°C temperature range .

Electrical Specifications

Input Voltage — 95 to 135Vac, 400 Hz

Frequency Range — 320 to 480 Hz

Accuracy — ± 2%

Contact Arrangement — 1 Form C (SPDT) or 2 Form C (DPDT)

Contact Ratings — 4A resistive @ 30Vdc
2A resistive @ 115 Vrms, 400 Hz

Current Drain — 150mA maximum

Hysteresis — 0.5% from trip point

Function Diagram

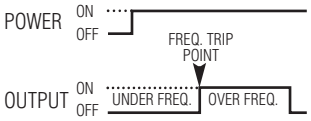

Outline Dimensions

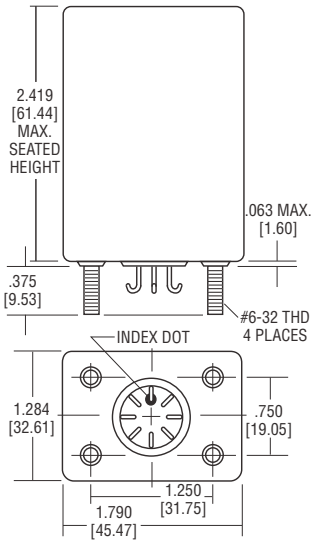

Mounting Option A

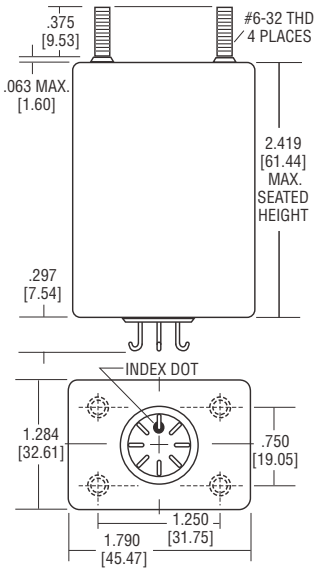

Mounting Option B

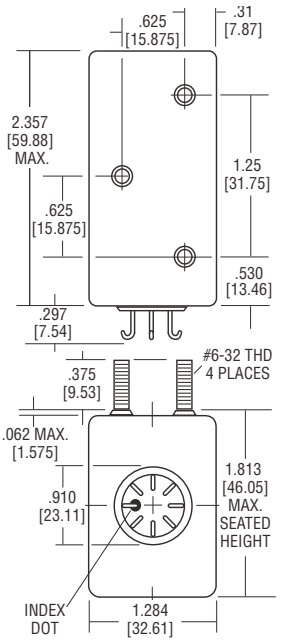

Mounting Option C

Environmental Specifications

Temperature Range — -55°C to +85°C

Vibration — 20 G's, 10 - 2,000 Hz

Shock — 50 G's, 11 ± 1ms duration

Insulation Resistance — 1,000 megohms, min., at 500Vdc, all terminals to case

Dielectric Strength — 1,000Vrms, 60 Hz., at sea level, all terminals to case

Sealing — Hermetic, 1.3 in. (33.0mm) of mercury

Life — 100,000 operations, min.

Weight — 8.5 oz (240g) max.

Wiring Diagrams

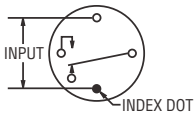

1 Form C

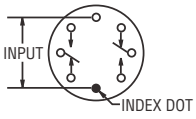

2 Form C

Catalog 5-1773450-5
Revised 3-13

www.te.com

Dimensions are shown for reference purposes only. Specifications subject to change.

Dimensions are in millimeters unless otherwise specified.

USA: +1 800 522 6752
Asia Pacific: +86 0 400 820 6015
UK: +44 800 267 666

For additional support numbers please visit www.te.com

Table of Contents

DS11 Series DC Relays, 2 Amp Output Rating,
Qualified to DSCC Drawing 88062 . . . . . .10-2 – 10-5

DS13 Series DC Relays, 2 Amp Output Rating,
Qualified to DSCC Drawing 90091 . . . . . .10-6 – 10-9

MS14 Series Solid State Relay 10-10, 10-11

JTS5, 6, & 7 Series, DC & Bi-Directional Output, Up to 250mA & 250V Output Rating,
TO-5 Package, Qualified to MIL-PRF-28750/5, /6, & /7 10-12

MS18 Series, DC & Bi-Directional Output, Up to 2A & 350V Output Rating,
Qualified to DSCC Drawing 89116 . . . . . .10-13, 10-14

JDS9 Series, AC Relays, 2A/250Vrms Rating, Qualified to MIL-PRF-28750/9 . . .10-15, 10-16

PS12 Series, AC Relays, 10A/250Vrms Rating,
Qualified to DSCC Drawing 86031 . . . . . .10-17, 10-18

JPS10 Series, AC Relays, 25A/250Vrms Rating,
Qualified to MIL-PRF-28750/10 . . . . . .10-19, 10-20

Catalog 5-1773450-5
Revised 3-13

www.te.com

Dimensions are shown for reference purposes only. Specifications subject to change.

Dimensions are in millimeters unless otherwise specified.

USA: +1 800 522 6752
Asia Pacific: +86 0 400 820 6015
UK: +44 800 267 666

For additional support numbers please visit www.te.com

DS11 Series SSR For DC Loads up to 2A @ 60Vdc

Product Facts

- **Standard options: short circuit/overload protection, switch status and trip status**
- **Optically coupled all solid state relay**
- **TTL & CMOS compatible input**
- **Low on-resistance power MOSFET output**
- **Tested per MIL-PRF-28750D and approved to DSCC drawing 88062 with "Y" level screening**

DS11 series SSRs feature state of the art photo-voltaic optical isolation and power MOSFET output chips for ultra-reliable high speed switching of DC loads up to 2 amps, with extremely low on-resistance. Standard options include integral current overload/short circuit protection to provide protection of the relay, load and wiring; and isolated switch status or trip status. The overload feature provides protection if a short or overload develops while the relay is in the on state or if the relay is turned on into a dead short. Switch status, optically isolated from the load, signals the status of the output and provides a logic "0" when the output is off and a logic "1" when the output is on. Trip status, also optically isolated from the load, provides a logic "1" if the output trips off and a logic "0" when the output is in a normal condition, on or off, and is available only in conjunction with short circuit protection.

Kilovac Part No.	DSCC Dwg. No.	Relay Version
DS11-1Y	88062-008	Basic relay
DS11-1000	88062-004	Relay w/ short circuit protection
DS11-1001	88062-006	Relay w/ switch status
DS11-1002	88062-002	Relay w/ short circuit protection and switch status
DS11-1003	N/A	Relay w/ short circuit protection and trip status

2 Terminal Input Configuration

Direct Drive (Status Optional)

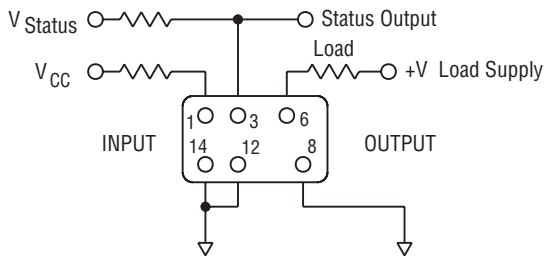

TTL Drive

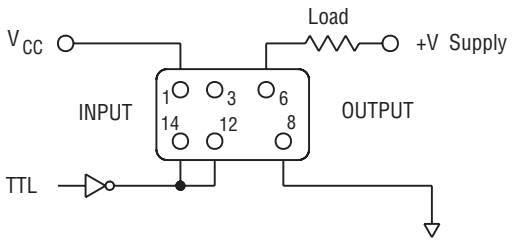

3 Terminal Input Configuration

With Output Status

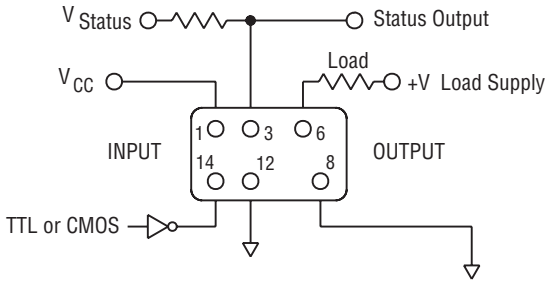

Without Output Status

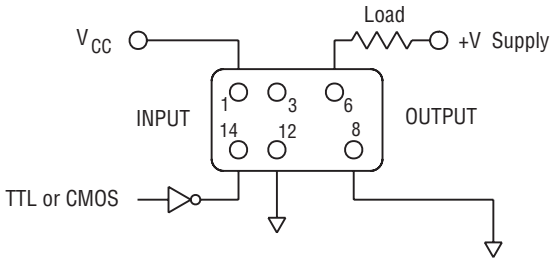

Catalog 5-1773450-5
Revised 3-13

www.te.com

Dimensions are shown for reference purposes only. Specifications subject to change.

Dimensions are in millimeters unless otherwise specified.

USA: +1 800 522 6752
Asia Pacific: +86 0 400 820 6015
UK: +44 800 267 666

For additional support numbers please visit www.te.com

DS11 Series SSR For DC Loads up to 2A @ 60Vdc (Continued)

Environmental Characteristics

Ambient Temperature Range —
Operating — -55°C to +105°C
Storage — -55°C to +105°C

Vibration Resistance —
100 G's, 10-3,000 Hz

Shock Resistance —
50 G's, 11 ms pulse

Constant Acceleration Resistance (Y1 axis) —
5,000 G's

Mechanical Characteristics

Weight (approx.) —
.176 oz. (5 grams)

Materials —
Header — KOVAR
Cover — Nickel
Pins — KOVAR, gold plated

Electrical Specifications (-55°C to +105°C unless otherwise specified)

Input (2 terminal configuration)	
Input supply voltage range (Vcc)	3.8 - 32 Vdc (Notes 1 & 2, Figures 1 & 2)
Input current (max.) @ 5Vdc	15mAdc (Notes 1 & 2, Figures 1 & 2)
Must turn-on voltage	3.8Vdc
Must turn-off voltage	1.5Vdc
Reverse voltage protection	-32Vdc
Input (3 terminal configuration)	
Control voltage range	0 - 18 Vd
Control current (max.)	250µAdc @ 5V, 1mA @ 18V
Input supply voltage range (Vcc)	3.8 - 32 Vdc (Notes 1 & 2, Figures 1 & 2)
Input current (max.) @ 5Vdc	15mADC (Notes 1 & 2, Figures 1 & 2)
Must turn-on voltage	0.3Vdc
Must turn-off voltage	3.2Vdc
I/O	
Dielectric strength (min.)	1,000V rms
Insulation resistance (min.) @ 500Vdc	10^9 ohms
Capacitance (max.)	10pF
Output	
Continuous load current (max.) @ 25°C	2.1Adc (Figure 7)
Continuous load voltage (max.)	60Vdc
Transient blocking voltage (max.)	80Vdc (Note 5)
On resistance (max.) @ T_j = 25°C, I_L = 100mA	0.15 ohm (Note 6, Figure 6)
Output voltage drop (max.)	0.5Vdc
Leakage current (max.) @ V = 60Vdc	100µAdc
Leakage current (max.) @ V = 60Vdc, with switch status	2mAdc
Turn-on time (max.)	3 ms (Figure 3)
Turn-off time (max.)	1 ms (Figure 3)
dv/dt (min.)	100V / µs
Electrical system spike	600Vdc (Note 5)
Output chip junction temperature (max.)	125°C
Thermal resistance (max.), junction to ambient	90°C/W
Thermal resistance (max.), junction to case	25°C/W
Status	
Status supply voltage range	1 - 18Vdc
Status current (max.) @ Vstatus ≤ 0.4Vdc	600µADC (Figure 5, Note 8)
Status leakage current (max.) @ 16Vdc	10µAdc
Status turn-on time (max.)	3.5 ms (Figure 4)
Status turn-off time (max.)	8 ms (Figure 4)
Short Circuit Protection	
Current surge without tripping (max.), 100ms pulse	4.25Adc
Overload trip current (max.), 0.5 ms pulse, V = 60Vdc	10Adc
Trip time (typical), turning on into short	400µs
Trip time (typical), shorting while relay is on	280µs

KOVAR is a trademark of Carpenter Technology Corporation.

Catalog 5-1773450-5
Revised 3-13

www.te.com

Dimensions are shown for reference purposes only. Specifications subject to change.

Dimensions are in millimeters unless otherwise specified.

USA: +1 800 522 6752
Asia Pacific: +86 0 400 820 6015
UK: +44 800 267 666

For additional support numbers please visit www.te.com

DS11 Series SSR For DC Loads up to 2A @ 60Vdc (Continued)

Figure 1 - Maximum Input Current vs. Input Voltage

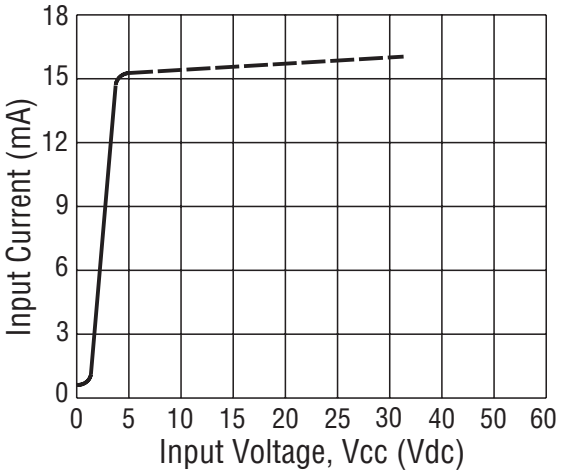

Figure 2 - Series Resistance vs. Vcc Supply Voltage (Note 1)

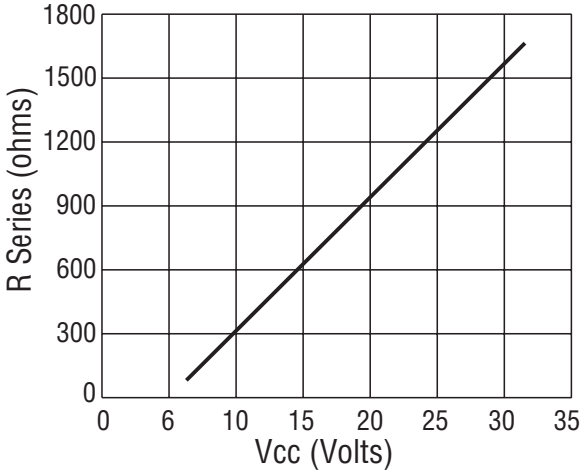

Figure 3 - Turn-on and Turn-off Timing

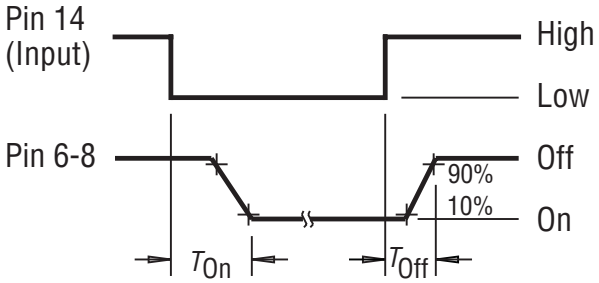

Figure 4 - Output Status Timing

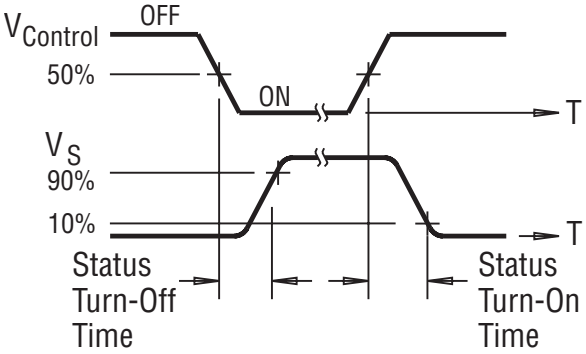

Figure 5 - Status Resistor vs. Status Supply Voltage

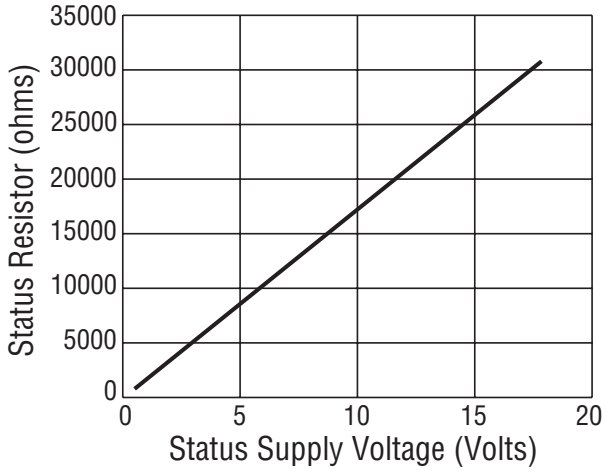

Figure 6 - On-Resistance vs. Temperature (Note 6)

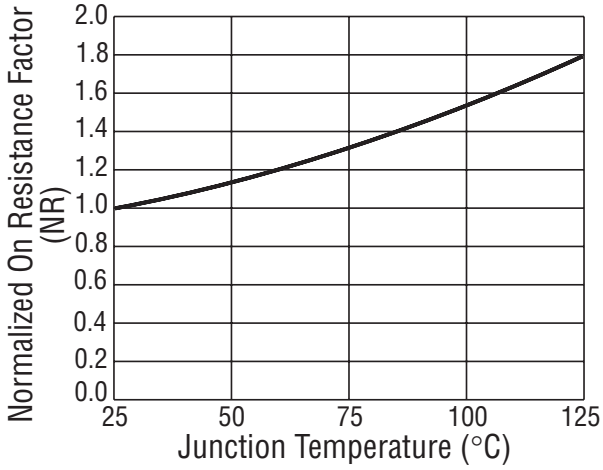

DS11 Series SSR For DC Loads up to 2A @ 60Vdc (Continued)

Figure 7 - Temperature Derating Curve

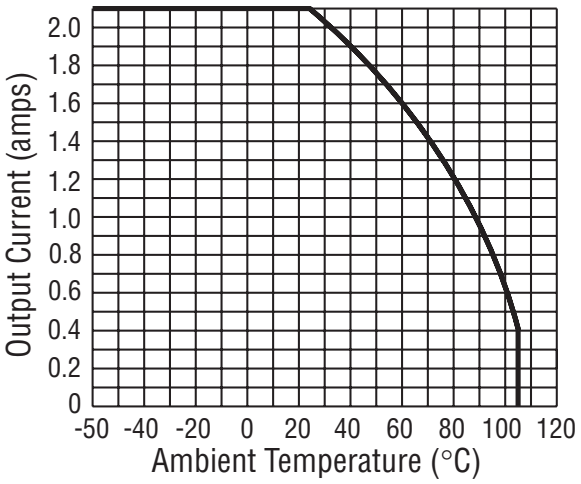

Figure 8 - Maximum Surge Current Without Tripping

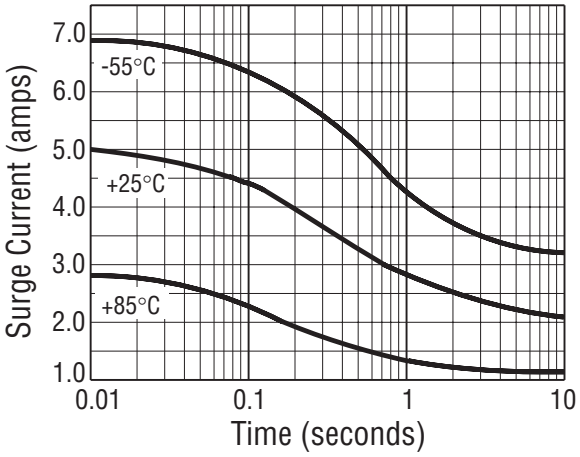

Figure 9 - Outline Dimensions

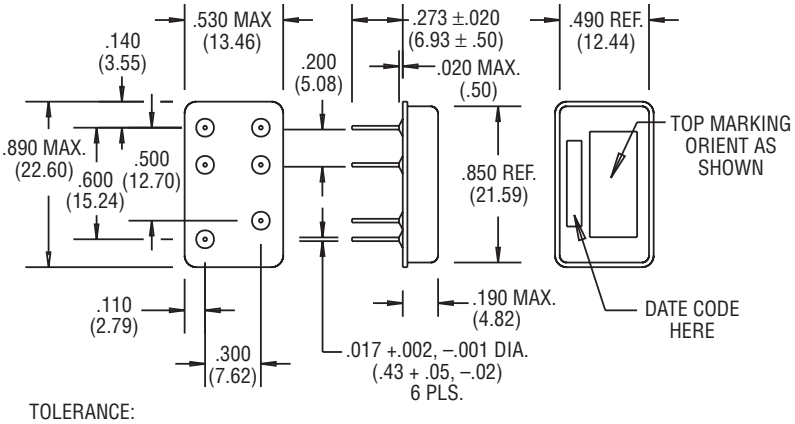

TOLERANCE:
± 0.010 (0.25mm) FOR 2 PLACE DECIMALS,
± 0.005 (0.13mm) FOR 3 PLACE DECIMALS.
UNLESS OTHERWISE SPECIFIED

Notes

1. 2 terminal input configuration is compatible with CMOS or open collector TTL (with pull-up resistor). For Vcc levels above 6Vdc, a series limiting resistor is required. See Fig. 2 for resistor value. Use standard resistor value equal to or less than value from the curve.
2. Input transitions to be ≤ 1ms duration, and input direct drive should be “bounceless contact” type.
3. Vcc = 5Vdc for all tests unless otherwise specified.
4. All DS11 Series relays may drive loads connected to either positive or negative referenced power supply lines. Reversing polarity of output may cause permanent damage. Inductive loads must be diode suppressed.
5. Transient blocking voltage and electrical system spike tests are performed per MIL-STD-704 (28VDC systems).
6. To determine the maximum on-resistance at any given junction temperature, multiply on-resistance at 25°C (0.15 ohm) by normalized on-resistance factor from curve (Fig. 6).
7. Overload testing per MIL-R-28750 is constrained to the limits imposed by the short circuit protection requirements of this specification and DSCC drawing 88062. Load circuit series inductance for “load shorted” mode of operation to be limited to 50mH max. Maximum repetition rate into a shorted load should not exceed 10 Hz.
8. Proper operation of the status feedback requires a status pull-up resistor. See Fig. 5 for status resistor value.

Catalog 5-1773450-5
Revised 3-13

www.te.com

Dimensions are shown for reference purposes only. Specifications subject to change.

Dimensions are in millimeters unless otherwise specified.

USA: +1 800 522 6752
Asia Pacific: +86 0 400 820 6015
UK: +44 800 267 666

For additional support numbers please visit www.te.com

DS13 SSR for loads up to 2A @ 60Vdc

Product Facts

- **Standard options: short circuit/overload protection and control status.**
- **Optically coupled all solid state relay.**
- **TTL & CMOS compatible input.**
- **Low on-resistance power MOSFET output.**
- **Tested per MIL-PRF-28750D and approved to DSCC drawing 90091.**
- **All versions available with Tyco Electronics "W" level screening for Kilovac relays.**

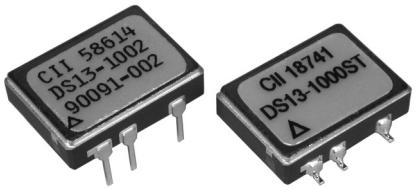

DS13 series SSRs employ state of the art photovoltaic optical isolation and power MOSFET output chips for ultra-reliable high speed switching of DC loads up to 2 amps, with low on-resistance. Standard options include integral current overload/short circuit protection and a separate input control status line. The overload feature provides protection of the relay, load and load circuit wiring in the event of a sustained current overload or short circuit while the relay is on or when it is turned on into a short. The control status provides a built-in test function which provides a logic "0" when the input circuit is energized and functional. The relay is packaged into a custom hermetically sealed low-profile 8-pin ceramic DIP package, with through hole or surface mount pins.

Kilovac Part No.	DSCC Dwg. No.	Relay Version
DS13-1Y	90091-008	Basic relay
DS13-1000	90091-004	Relay w/ short circuit protection
DS13-1001	90091-006	Relay w/ control status
DS13-1002	90091-002	Relay w/ short circuit protection and control status

Notes: Add suffix "S" to part number for surface mount versions.
Add suffix "T" to part number for tinned leads.
Add suffix "W" to part number for lower screening level.

2 Terminal Input Configuration

Direct Drive

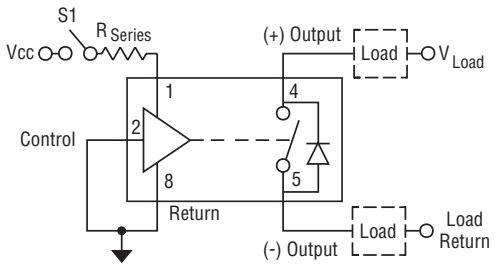

TTL Drive

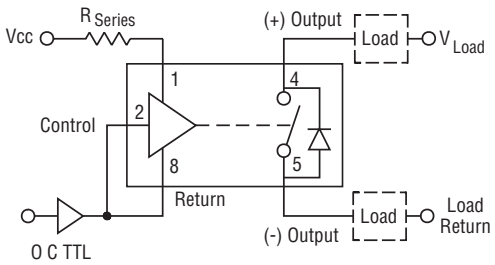

3 Terminal Input Configuration

With Status

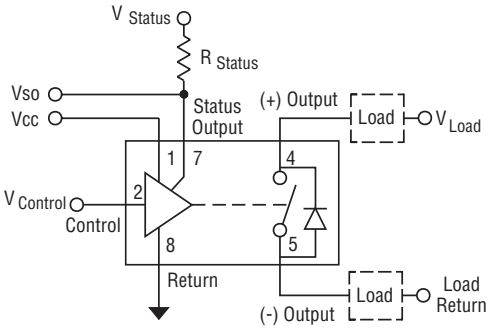

Without Status

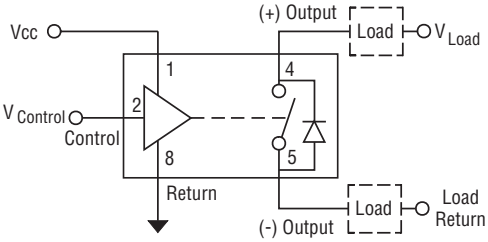

Catalog 5-1773450-5
Revised 3-13

www.te.com

Dimensions are shown for reference purposes only. Specifications subject to change.

Dimensions are in millimeters unless otherwise specified.

USA: +1 800 522 6752
Asia Pacific: +86 0 400 820 6015
UK: +44 800 267 666

For additional support numbers please visit www.te.com

DS13 SSR for loads up to 2A @ 60Vdc (Continued)

Environmental Characteristics

Ambient Temperature Range:
Operating: -55°C to +105°C.
Storage: -55°C to +125°C.

Vibration Resistance:
100 G's, 10-3,000 Hz.

Shock Resistance:
1,500 G's, 0.5 ms pulse.

Constant Acceleration Resistance:
5,000 G's.

Mechanical Characteristics

Weight (max.):
.07 oz. (2 grams)

Materials:
Case: DIP, hermetically sealed, ceramic
Pins: Copper, gold plated

Electrical Specifications (-55°C to +105°C unless otherwise specified)

Input (2 terminal configuration)	
Input supply voltage range (Vcc)	3.8 - 32 Vdc (Notes 1 & 2, Figures 1 & 2)
Input current (max.) @ 5Vdc	15mAdc (Notes 1 & 2, Figures 1 & 2)
Must turn-on voltage	3.8Vdc
Must turn-off voltage	1.5Vdc
Reverse voltage protection	-32Vdc
Input (3 terminal configuration)	
Control voltage range	0 - 18 Vdc
Control current (max.)	240µAdc @ 5V, 1mA @ 18V
Input supply voltage range (Vcc)	3.8 - 32 Vdc (Notes 1 & 2, Figures 1 & 2)
Input current (max.) @ 5Vdc	15mAdc (Notes 1 & 2, Figures 1 & 2)
Must turn-on voltage	0.3Vdc
Must turn-off voltage	3.2Vdc
I/O	
Dielectric Strength (min.)	1,000V rms
Insulation Resistance (min.) @ 500Vdc	10^9 ohms
Capacitance (max.)	10pF
Output	
Continuous load current (max.) @ 25°C, without short circuit protection	2.0Adc (Figure 5, Note 3)
Continuous load current (max.) @ 25°C, with short circuit protection	1.0Adc (Figure 5, Note 3)
Continuous load voltage (max.)	60Vdc
Transient blocking voltage (max.)	80Vdc (Note 4)
On resistance (max.) @ T_j = 25°C, I_L = 100ma, with short circuit protection	0.45 ohm (Note 5, Figure 4)
On resistance (max.) @ T_j = 25°C, I_L = 100ma, without short circuit protection	0.22 ohm (Note 5, Figure 4)
Output voltage drop (max.), with short circuit protection	0.6Vdc
Output voltage drop (max.), without short circuit protection	0.75Vdc
Off-state leakage current (max.) @ 60Vdc	100µAdc
Turn-on time (max.)	1.5 ms (Figure 3)
Turn-off time (max.)	.25 ms (Figure 3)
dv/dt (min.)	100V / µs
Electrical system spike	±600Vdc (Note 4)
Junction temperature (max.)	150°C
Thermal resistance (max.), junction to ambient	80°C/W
Thermal resistance (max.), junction to case	20°C/W
Status	
Status supply voltage	30Vdc
Status sink current (max.) @ Vstatus≤ 0.3Vdc	2mAdc (Note 7)
Status leakage current (max.) @ 15Vdc	4µAdc
Short Circuit Protection	See Figure 6, Note 7

Catalog 5-1773450-5
Revised 3-13

www.te.com

Dimensions are shown for reference purposes only. Specifications subject to change.

Dimensions are in millimeters unless otherwise specified.

USA: +1 800 522 6752
Asia Pacific: +86 0 400 820 6015
UK: +44 800 267 666

For additional support numbers please visit www.te.com

DS13 SSR for loads up to 2A @ 60Vdc (Continued)

Figure 1 - Maximum Input Current vs. Input Voltage

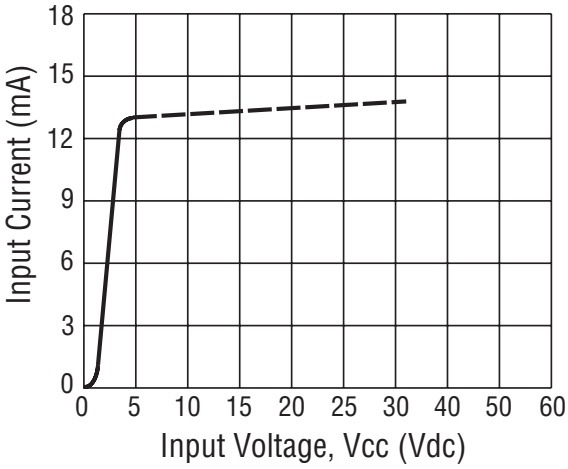

Figure 2 - Series Resistance vs. Vcc Supply Voltage (Note 1)

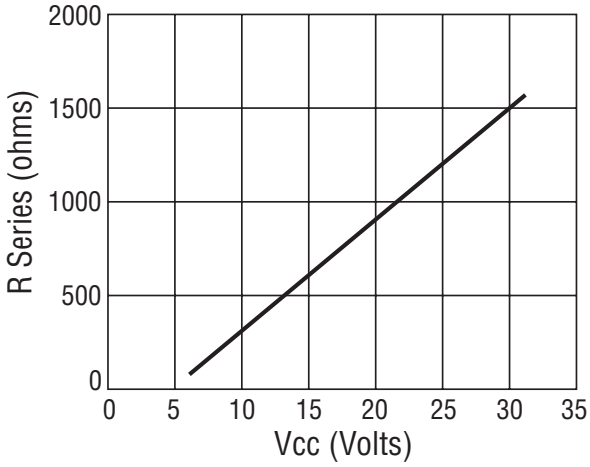

Figure 3 - Output Turn-on and Turn-off Timing

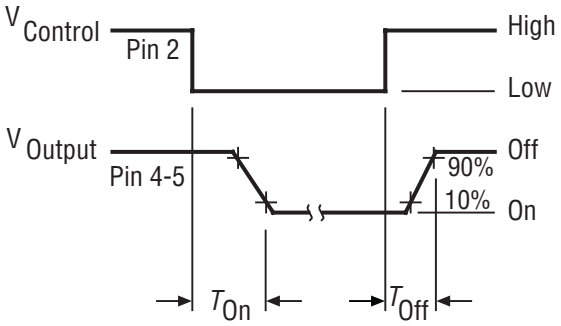

Figure 4 - On-Resistance vs. Temperature (Note 6)

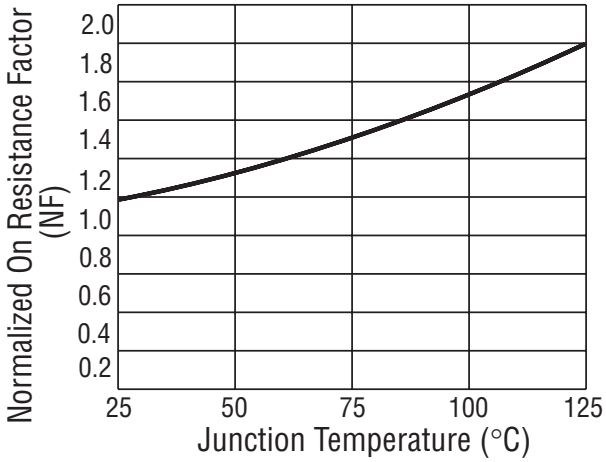

Figure 5 - Temperature Derating Curve

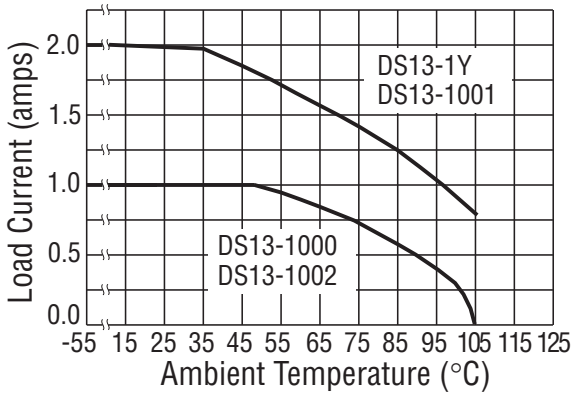

Figure 6 - Typical Current Trip Levels

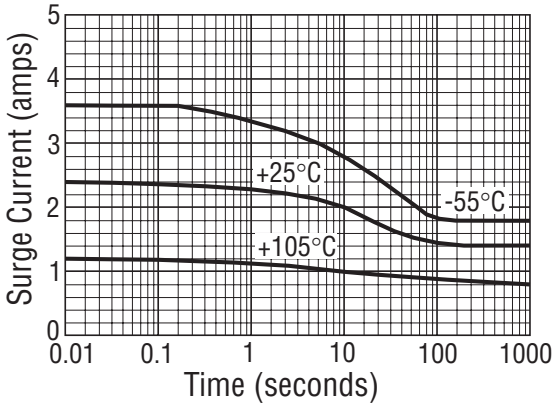

Catalog 5-1773450-5
Revised 3-13

www.te.com

Dimensions are shown for reference purposes only. Specifications subject to change.

Dimensions are in millimeters unless otherwise specified.

USA: +1 800 522 6752
Asia Pacific: +86 0 400 820 6015
UK: +44 800 267 666

For additional support numbers please visit www.te.com

DS13 SSR for loads up to 2A @ 60Vdc (Continued)

Figure 7 - Outline Dimensions

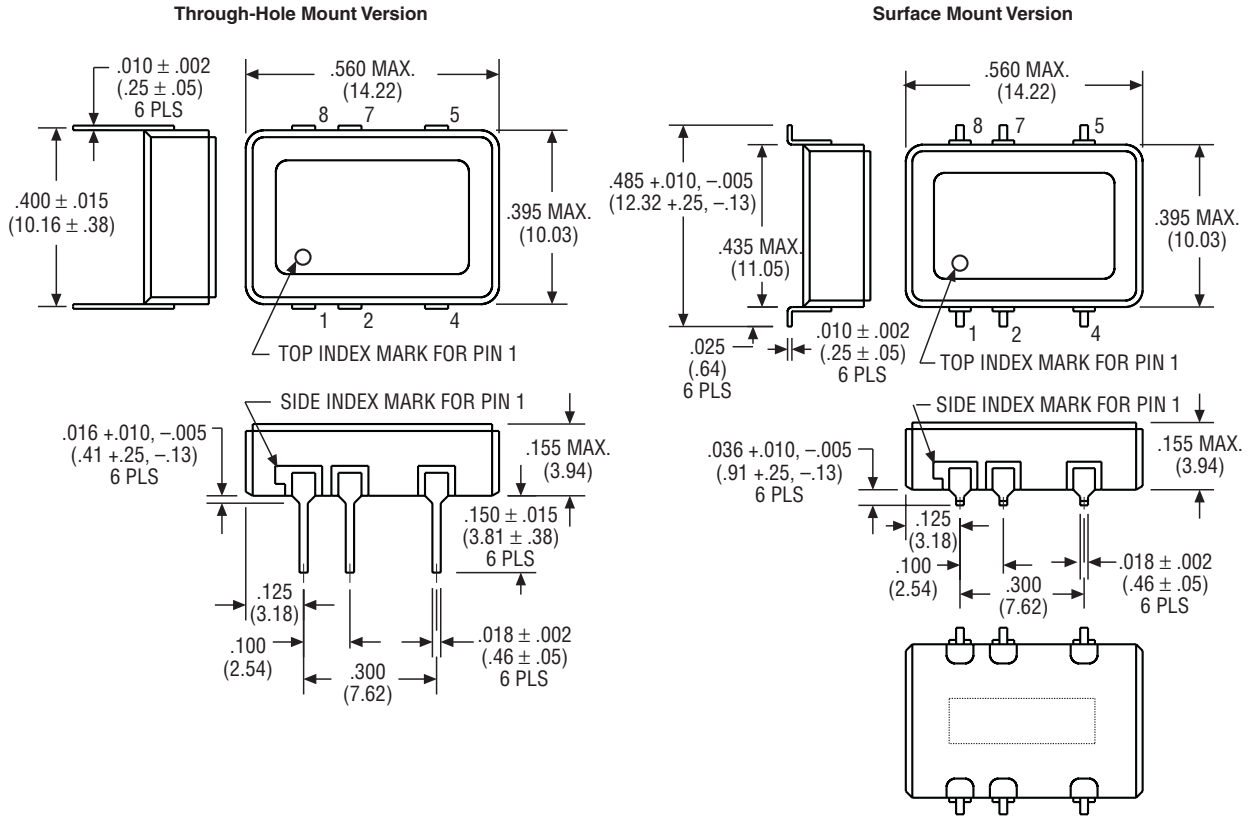

Notes

1. 2 terminal input configuration is compatible with CMOS or open collector TTL (with pull-up resistor). For Vcc levels above 6Vdc, a series limiting resistor is required. See Fig. 2 for resistor value. Use standard resistor value equal to or less than value form the curve.
2. Vcc = 5Vdc for all tests unless otherwise specified.
3. All DS13 Series relays may drive loads connected to either positive or negative referenced power supply lines. Reversing polarity of output may cause permanent damage. Inductive loads must be diode suppressed.
4. Transient blocking voltage & electrical system spike tests are performed per MIL-STD-704 (28Vdc systems).
5. To determine the maximum on-resistance at any given junction temperature, multiply on-resistance at 25°C by normalized on-resistance factor from curve (Fig. 4).
6. Overload testing per MIL-R-28750 is constrained to the limits imposed by the short circuit protection requirements of this specification and DSCC drawing 90091. Load circuit series inductance for “load shorted” mode of operation to be limited to 50mH max. Maximum repetition rate into a shorted load should not exceed 10 Hz. To calculate maximum on-resistance at any temperature, use the following equation: R(on) = R(on) @ 25°C x NF (without short circuit protection) and R(on) = 0.2 x NF + .21 (with short circuit protection) where NF = normalized on-resistance factor from Fig. 4.
7. Proper operation of the status feedback requires a status pull-up resistor. Select the status resistor such that it limits status output current to 2mA: R status = V status – 0.3V / 2mA.

Catalog 5-1773450-5
Revised 3-13

www.te.com

Dimensions are shown for reference purposes only. Specifications subject to change.

Dimensions are in millimeters unless otherwise specified.

USA: +1 800 522 6752
Asia Pacific: +86 0 400 820 6015
UK: +44 800 267 666

For additional support numbers please visit www.te.com

MS14 Series Solid State Relay, With DC or Bi-Directional Output to 350mA @ 400V

Product Facts

- **1000V optical isolation protects control and driver circuitry from load transients.**
- **Buffered/current limited input for direct drive from CMOS or TTL logic.**
- **Power MOSFET output chips for low voltage drop.**
- **90 & 240mA output current.**
- **85, 100 & 400V output voltage.**
- **Subminiature hermetically sealed .100 grid package.**
- **Screened per "Y" level of MIL-PRF-28750D.**
- **Direct replacement for TELEDYNE M92F & M93F series**

MS14 series subminiature SSRs employ state of the art photo-voltaic optical isolation providing 1000Vrms input/output isolation and power mosfet output chips for ultra-reliable high speed switching of DC or bidirectional loads up to 350mA and 400Vdc. The input is current regulated and buffered to minimize power dissipation and permit driving the relay direct from CMOS or TTL. The relay is packaged in a custom hermetically sealed low-profile .100 grid package which conserves space for high density PC board circuitry.

Ordering Information

Kilovac Part No.	DSCC Drawing/Pin No.	Output Rating
MS14-1Y	85092-001	350mA / 400V
MS14-2Y	85092-002	135mA / 400V
MS14-3Y	87034-003	±240mA / 85V

Environmental Characteristics

Ambient Temperature Range:
Operating: -55°C to +105°C.
Storage: -55°C to +125°C.

Vibration Resistance:
30 G's, 10-3,000 Hz.

Shock Resistance:
1,500 G's, 0.5 ms pulse.

Constant Acceleration Resistance:
5,000 G's.

Mechanical Characteristics

Weight (max.):
.07 oz. (2 grams)

Materials:
Case: Nickel, hermetically sealed.
Pins: Kovar, gold plated

TTL Configuration

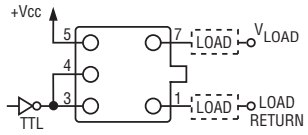

CMOS Configuration

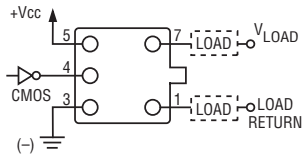

Electrical Specifications (-55°C to +105°C unless otherwise specified)

Input (TTL Drive)	
Input supply voltage range (Vcc)	3.8 - 32 Vdc (Notes 1 & 2, Figures 1 & 2)
Input current (max.) @ 5Vdc	16mAdc (Notes 1 & 2, Figures 1 & 2)
Must turn-on voltage	3.8Vdc
Must turn-off voltage	1.5Vdc
Input (CMOS Drive)	
Control voltage range	0 - 18 Vdc
Control current (max.)	250µAdc @ 5V, 1mA @ 18V
Input supply voltage range (Vcc)	3.8 - 32 Vdc (Notes 1 & 2, Figures 1 & 2)
Input current (max.) @ 5Vdc	16mAdc (Notes 1 & 2, Figures 1 & 2)
Must turn-on voltage	0.3Vdc
Must turn-off voltage	2.8Vdc
I/O	
Dielectric Strength (min.)	1,000V rms
Insulation Resistance (min.) @ 500Vdc	10^9 ohms
Output	
Continuous load current (max.) @ 25°C: MS14-1Y	350mAdc
Continuous load current (max.) @ 25°C: MS14-2Y	135mAdc
Continuous load current (max.) @ 25°C: MS14-3Y	+/– 240mA
Continuous load voltage (max.) @ 25°C: MS14-1Y	100Vdc
Continuous load voltage (max.) @ 25°C: MS14-2Y	400Vdc
Continuous load voltage (max.) @ 25°C: MS14-3Y	+/– 85V
On resistance (max.) @ T_j = 25°C, I_L = 100mA: MS14-1Y	4 ohms
On resistance (max.) @ T_j = 25°C, I_L = 100mA: MS14-2Y	25 ohms
On resistance (max.) @ T_j = 25°C, I_L = 100mA: MS14-3Y	8 ohms
Off-state leakage I (max.) @ 80% max. V @ –55 to +25°C	1µA
Off-state leakage I (max.) @ 80% max. V @ =25 to +85°C	50µA
Junction temperature (max.)	150°C
Turn-on time (max.) MS14-1Y & –2Y	.7mS
Turn-on time (max.) MS14-3Y	2mS
Turn-off time (max.) (all versions)	1mS

© 2011 by Tyco Electronics Corporation. All Rights Reserved.
TE logo and Tyco Electronics are trademarks.
Other products and company names mentioned herein may be trademarks of their respective owners.

Catalog 5-1773450-5
Revised 3-13

www.te.com

Dimensions are shown for reference purposes only. Specifications subject to change.

Dimensions are in millimeters unless otherwise specified.

USA: +1 800 522 6752
Asia Pacific: +86 0 400 820 6015
UK: +44 800 267 666

For additional support numbers please visit www.te.com

MS14 Series Solid State Relay, With DC or Bi-Directional Output to 350mA @ 400V (Continued)

Figure 1 - Max. Input Current vs. Input Voltage

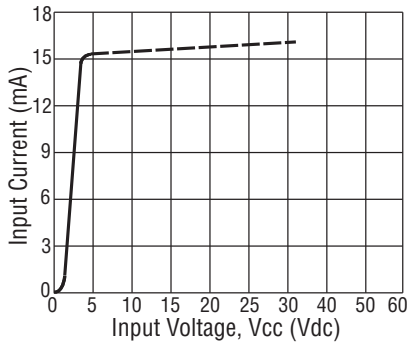

Figure 2 - Series Res. vs. Vcc Supply Voltage (Note 1)

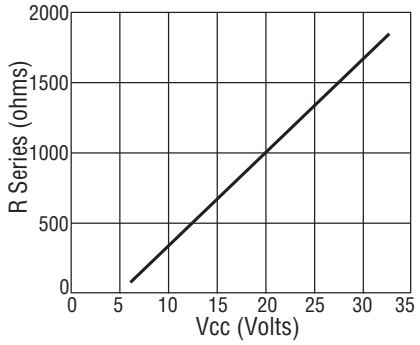

Figure 3 - Output Turn-on and Turn-off Timing

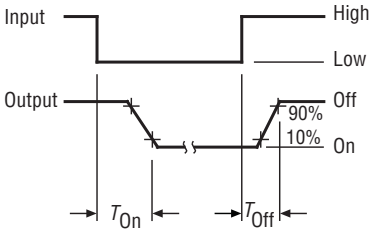

Figure 4 - Temperature Derating Curve

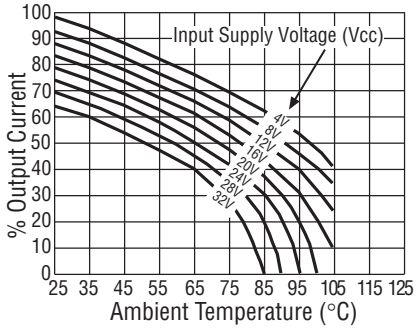

Figure 5 - On-Resistance vs. Temperature (Note 6)

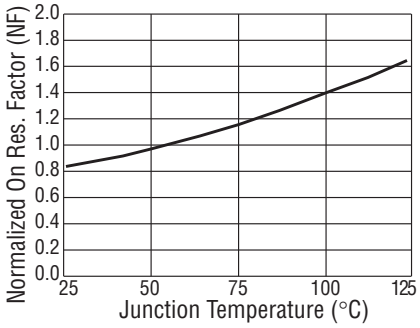

Figure 6 - Simplified Circuit

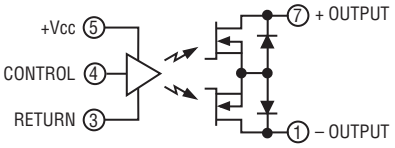

Note: MS14-1Y and -2Y have a single output chip.

Figure 7 - Outline Dimensions

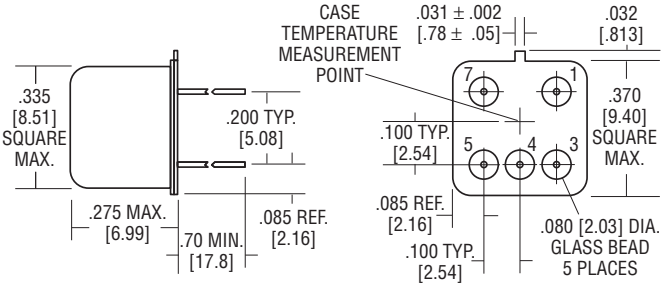

Unless otherwise specified, tolerances are:
±0.010 [0.25] for 2 place decimals
±0.005 [0.13] for 3 place decimals

Terminal numbers are for reference only and do not appear on the header.

Notes

1. 2 terminal input configuration is compatible with CMOS or open collector TTL (with pull-up resistor).
2. For Vcc levels above 6Vdc, a series limiting resistor is required. See Fig. 2 for resistor value. Use standard resistor value equal to or less than value form the curve.
3. Vcc = 5Vdc for all tests unless otherwise specified.
4. All MS14 Series relays may drive loads connected to either positive or negative referenced power supply lines. Inductive loads must be diode suppressed.
5. If an input series current limiting resistor is used, derating of output current vs. Vcc is not necessary. Curve for 4V applies.
6. On-resistance at any ambient temperature other than 25°C can be computed as follows:
   R (@ any T) = R (@ +25°C) x $e^{0.006}$, where T = new temperature – 25°C, e = 2.7182818 .

9-1773439-2–PDF–KRG–9-07

Dimensions are shown for reference purposes only. Specifications subject to change.

Dimensions are in millimeters unless otherwise specified.

USA: +1 800 522 6752
Asia Pacific: +86 0 400 820 6015
UK: +44 800 267 666

For additional support numbers please visit www.te.com

JTS5, 6, & 7 Series, DC & Bi-Directional Output, Up to 250mA & 250V Output Rating, TO-5 Package

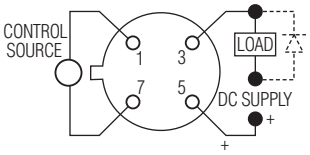

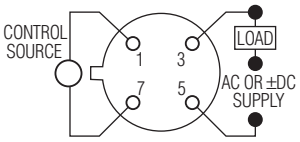

Terminal View

Product Facts

- **Hermetically sealed TO-5 package**
- **Transformer coupled**
- **High speed switching**
- **JTS5-1Y switches AC or DC**
- **Qualified to M28750/5, 6, & 7**

Input Characteristics

Input Voltage Range — 4.0 – 7.0 Vdc

Maximum Turn-on Voltage — 5.0 Vdc

Minimum Turn-off Voltage — 1.0 Vdc

I/O Dielectric — 1000 Vac pk-pk

Output Characteristics

Max. Output Current (Continuous, 25°C) —
50 mAac or mAdc (JTS5-1Y)
250 mAdc (JTS6-1Y)
100 mAdc (JTS7-1Y)

Max. Output Voltage —
40 Vac or Vdc (JTS5-1Y)
40 Vdc (JTS6-1Y)
250 Vdc (JTS7-1Y)

Max. On-resistance — 5 ohms (JTS5-1Y)

Turn-on Time — 10 µsec.

Turn-off Time — 15 µsec.

Environmental Characteristics

Shock — 1500 G's, 0.5 ms.

Vibration — 100 G's, 10 to 2000 Hz

Operating Ambient Temperature — -55 to +125°C

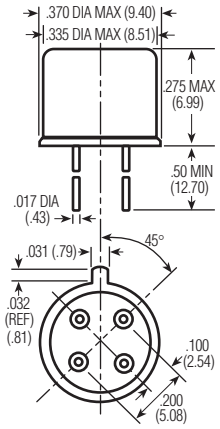

JTS5/JTS6/JTS7

Notes: 1) Reversing polarity of input (or output except for JTS5-1) may cause permanent damage.
2) Input must be a step function. Rise or fall time, as applicable, not to exceed 100 µsec.
3) Inductive loads must be diode suppressed.
4) For any control voltage, the maximum load current shown on graphs must not be exceeded. Attempting to draw currents in excess of those specified on graphs can cause permanent damage.

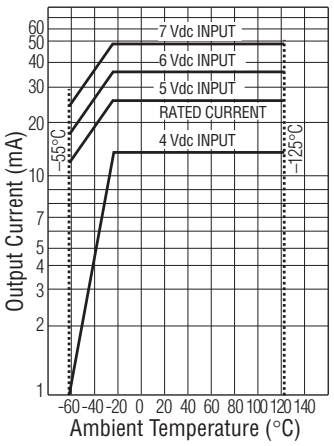

JTS5-1Y

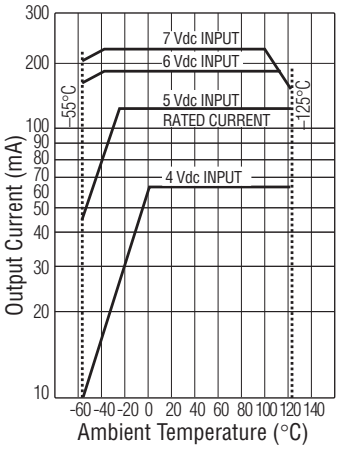

JTS6-1Y

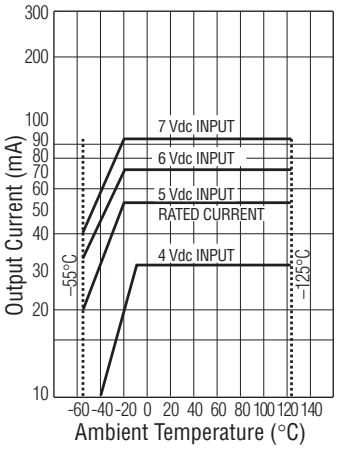

JTS7-1Y

Output Current Vs. Input Control Voltage and Ambient Temperature

Catalog 5-1773450-5
Revised 3-13

www.te.com

Dimensions are shown for reference purposes only. Specifications subject to change.

Dimensions are in millimeters unless otherwise specified.

USA: +1 800 522 6752
Asia Pacific: +86 0 400 820 6015
UK: +44 800 267 666

For additional support numbers please visit www.te.com

MS18-1006 High Performance DC and Bi-directional Solid State Relay For Loads up to 2A @ 80Vdc

Product Facts

- **Bi-directional power FET output**
- **Optically coupled**
- **Low on-resistance**
- **Extremely low leakage current**
- **Subminiature hermetically sealed package**
- **Tested per MIL-PRF-28750D and approved to DSCC drawing 89116-006**

The MS18-1006 is an optically coupled SSR employing power MOSFET output chips in an inverse series configuration for switching DC or bi-directional loads. A common source connection is provided for the user to configure the output switching circuit for DC operation up to 2A with very low on-resistance. The relay features fast switching speeds, low off-state leakage, virtually zero offset voltage and the capability to withstand high inrush currents up to 350% of rated. The low profile subminiature package is hermetically sealed with pinouts on a 0.1" x 0.3" grid pattern.

Kilovac Part No.	DSCC Dwg. No.	Relay Version
MS18-1006	89116-006	Basic relay

Environmental Characteristics

Ambient Temperature Range —
Operating — -55°C to +120°C
Storage — -55°C to +125°C

Vibration Resistance —
100 G's, 10-2,000 Hz

Shock Resistance —
1,500 G's, 0.5 ms pulse

Constant Acceleration Resistance (Y-1 axis) —
5,000 G's

Mechanical Characteristics

Weight (approx.) —
.07 oz. (5 grams)

Materials —
Header — Kovar® Alloy
Cover — Grade A Nickel
Pins — Kovar® Alloy, gold plated

KOVAR is a trademark of Carpenter Technology Corporation.

Electrical Specifications (-55°C to +120°C unless otherwise specified)

Input	
Input current (max.)	25mAdc
Input voltage drop (max. @ 25mA))	1.5 Vdc
Must turn-on current	10mA
Must turn-off current	10µA
Reverse voltage protection	-5.0Vdc
I/O	
Dielectric strength (60Hz., 1mA leakage)	500V rms
Insulation resistance (min.) @ 500Vdc	10^9 ohms
Capacitance (max. @ 25Vdc, 1 Mhz)	5pF
Output	
Continuous load current, parallel (DC) configuration (max.)	2A (Figure 2)
Continuous load current, series (bi-directional) configuration (max.)	1A (Figure 2)
Continuous operating load voltage (max.)	+/– 80V
Transient blocking voltage (5 sec max.)	+/– 90V
Overload (100ms, 10% duty cycle, 10 cycles max.)	350% of rated
dv/dt (min.)	100V / µs
On resistance (max.), parallel (DC) configuration	0.4 ohm
On resistance (max.), series (bi-directional) configuration	0.6 ohm
Turn-on time (max, @ +/– 80V)	800µs (Figure 3)
Turn-off time (max, @ +/– 80V)	500µs (Figure 3)
Thermal resistance, junction to ambient	110°C/W
Thermal resistance, junction to case	20°C/W

Figure 1 – Wiring Diagrams

Series Connection

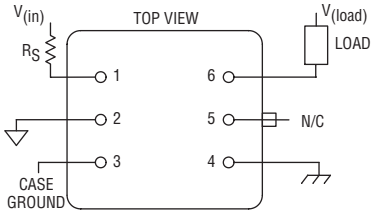

Parallel Connection

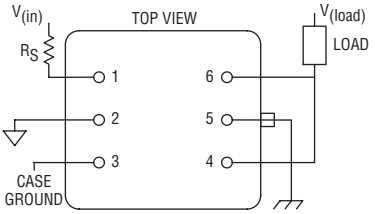

Catalog 5-1773450-5
Revised 3-13

www.te.com

Dimensions are shown for reference purposes only. Specifications subject to change.

Dimensions are in millimeters unless otherwise specified.

USA: +1 800 522 6752
Asia Pacific: +86 0 400 820 6015
UK: +44 800 267 666

For additional support numbers please visit www.te.com

MS18-1006 High Performance DC and Bi-directional Solid State Relay For Loads up to 2A @ 80Vdc (Continued)

Figure 2 - Temperature Derating Curves

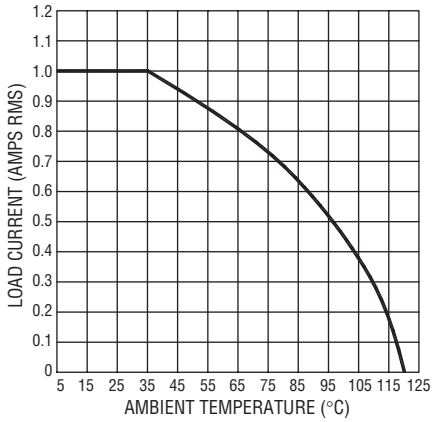

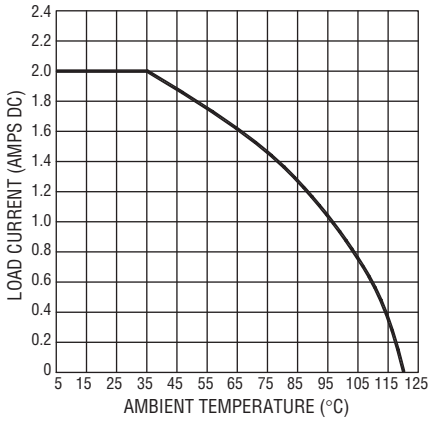

Figure 3 - Turn-on and Turn-off Timing

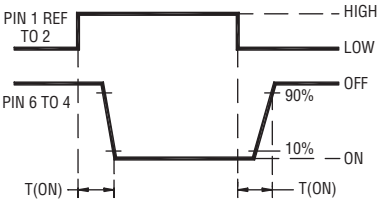

Figure 4 - Functional Block Diagram

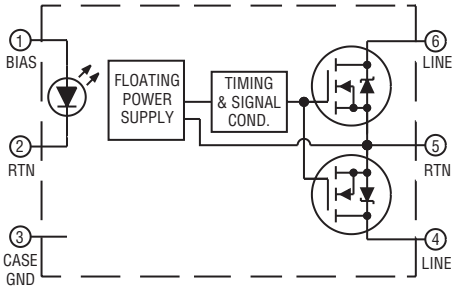

Figure 5 - Outline Dimensions

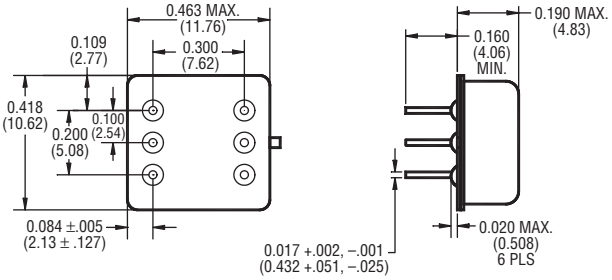

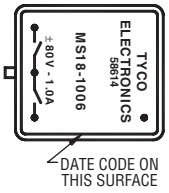

Notes

1. An external resistor must be in series with the input at all times.
2. Do not ramp input current. Input transition should be <1.0ms.
3. Input current/series resistor calculation (Approx.): $I_{(input)} = V_{IN} - V_{DROP}/R_{SERIES}$.
4. Unless otherwise specified parametric testing is accomplished at 25ma input current.
5. To calculate $R_{DS(ON)}$ for temperatures other than 25°C, use the following equation: $T_{(TEMP)} = (R_{DS(ON)}$ at + 25°C) • $e^{(X \cdot \Delta T)}$ where x = 0.0065.
6. Inductive loads must be diode suppressed.
7. Continuous load current is rated under conditions of still air.
8. Load may be connected to either side of relay, sink or source modes.
9. Reverse polarity >5Vdc may cause permanent damage
10. Acceptance testing is accomplished in the series (bi-directional) mode.
11. DSCC part numbers 89116-002 & 89116-004 are also available.

Catalog 5-1773450-5
Revised 3-13

www.te.com

Dimensions are shown for reference purposes only. Specifications subject to change.

Dimensions are in millimeters unless otherwise specified.

USA: +1 800 522 6752
Asia Pacific: +86 0 400 820 6015
UK: +44 800 267 666

For additional support numbers please visit www.te.com

JDS9 Series, AC Relays, 2A/250Vrms Rating

Input Characteristics

Input Voltage Range — 3.8 – 32 Vdc

Pick-up Voltage — 3.8 Vdc

Dropout Voltage — 1.5 Vdc

I/O Dielectric — 1500 Vrms

Output Characteristics

Max. Output Current (Continuous, 25°C) — 2 Arms

Max. Output Voltage — 250 Vrms

Peak Over Voltage Rating — 500 Vpk

Frequency Range — 40 – 440 Hz

Zero Switch Window — 15 Vpk

Thermal Resistance —
Junction to Ambient — 65°C/Watt
Junction to Case — 15°C/Watt

Environmental Characteristics

Shock — 1500 G's, 0.5 ms.

Vibration — 30 G's, 10 to 3000 Hz

Operating Ambient Temperature — -55 to +110°C

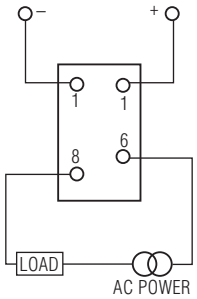

Terminal View

Product Facts

- **Hermetically sealed**
- **Thick film hybrid construction**
- **Optically isolated**
- **Zero voltage turn-on**
- **Qualified to MIL–R–28750/9**

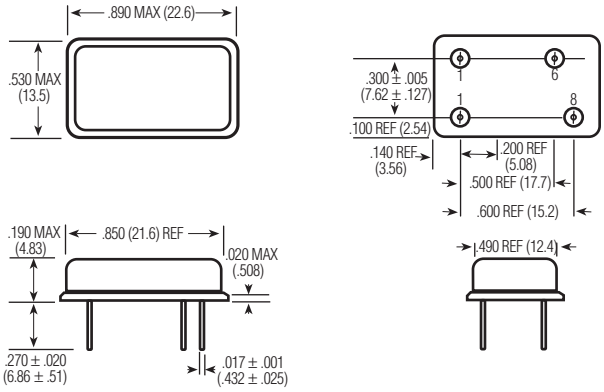

JDS9-1Y

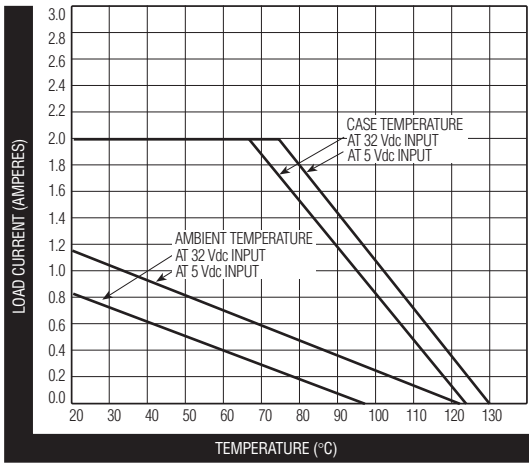

JDS9 Max. Output Current vs. Temperature

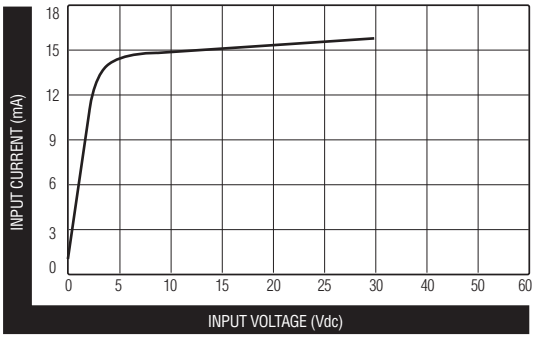

JDS9 Typical Input Current vs. Input Voltage

Catalog 5-1773450-5
Revised 3-13

www.te.com

Dimensions are shown for reference purposes only. Specifications subject to change.

Dimensions are in millimeters unless otherwise specified.

USA: +1 800 522 6752
Asia Pacific: +86 0 400 820 6015
UK: +44 800 267 666

For additional support numbers please visit www.te.com

JDS9 Series, AC Relays, 2A/250Vrms Rating (Continued)

Electrical Specifications (-55°C to +105°C unless otherwise specified)

Input	
Input supply voltage range (Vcc)	3.8 - 32 Vdc
Input current (max.) @ 5Vdc	15mAdc
Must turn-on voltage	3.8Vdc
Must turn-off voltage	1.5Vdc
Reverse voltage protection	-32Vdc
I/O	
Dielectric strength (min.)	1,500V rms/60 Hz.
Insulation resistance (min.) @ 500Vdc	10^9 ohms
Capacitance (max.)	10pF
Output	
Output current rating (max.)	2A rms (Fig. 2, Note 1)
Surge current (max.), 16ms @ 25°C (max.)	8A pk (Fig. 1, Note 3)
Continuous load voltage (max.)	250V rms
Transient blocking voltage (max.)	500V pk
Frequency range	40 - 440 Hz.
Output voltage drop (max.) @ 1A load current	1.5V rms
Off-state leakage current (max.) @ 250V rms/400 Hz.	1mA rms
Turn-on time (max.)	1/2 cycle
Turn-off time (max.)	1 cycle
Off-state dv/dt (min.), with snubber	200V /µs (Note 2)
Zero voltage turn-on window (max.)	10V
Wave distortion (max.)	4V rms
Output chip junction temperature (max.)	130°C
Thermal resistance (max.), junction to ambient	65°C/W
Thermal resistance (max.), junction to case	15°C/W

Notes

1. Operation at elevated load currents up to 2 amps is dependent on the use of suitable heatsink to maintain case temperature.
2. Recommended output snubber: R = 100 ohms (1/2 W), C = .01µF (600V).
3. Heating of output chip during and after a surge may cause loss of output blocking capability until junction temperature falls below maximum rating.

Dimensions are shown for reference purposes only. Specifications subject to change.

Dimensions are in millimeters unless otherwise specified.

USA: +1 800 522 6752
Asia Pacific: +86 0 400 820 6015
UK: +44 800 267 666

For additional support numbers please visit www.te.com

PS12 Series High Performance Solid State Relays For AC Loads up to 10A @ 250Vrms

Product Facts

- **Approved to DSCC drawing 86031**
- **Optically coupled all solid state relay**
- **TTL compatible input**
- **Zero voltage turn-on for low EMI**
- **Custom power package with screw terminals**

The PS12 series solid state relay is designed for AC power switching up to 10 amps at 250Vrms. The circuit employs back-to-back SCRs with zero voltage turn-on for reliable switching of resistive or reactive loads. TTL compatible input circuitry is optically isolated to 1,500Vrms from the AC load circuit. The relay is offered in two versions: the PS12-1Y with "Y" level screening per MIL-PRF-28750D, and the PS12-1W screened per Tyco Electronics specifications for Kilovac relays, equivalent to former "W" level of Mil-R-28750.

Kilovac Part Number	DSCC Part Number	Screening Level
PS12-1Y	86031-001	Y
PS12-1W	N/A	W

Circuit Diagram

Terminal View

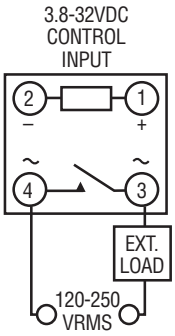

Outline Drawing

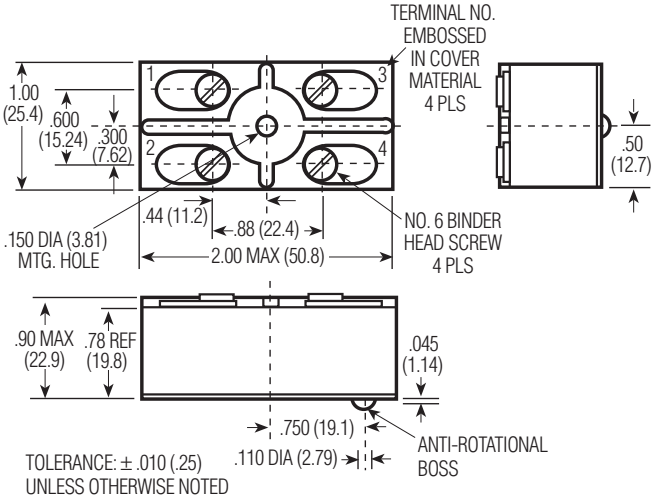

Catalog 5-1773450-5
Revised 3-13

www.te.com

Dimensions are shown for reference purposes only. Specifications subject to change.

Dimensions are in millimeters unless otherwise specified.

USA: +1 800 522 6752
Asia Pacific: +86 0 400 820 6015
UK: +44 800 267 666

For additional support numbers please visit www.te.com

PS12 Series High Performance Solid State Relays For AC Loads up to 10A @ 250Vrms (Continued)

Environmental Characteristics

Ambient Temperature Range —
Operating — -55°C to +95°C
Storage — -55°C to +110°C

Vibration Resistance —
30 G's, 78-2,000 Hz

Shock Resistance —
100 G's, 6 ms pulse

Constant Acceleration Resistance —
100 G's

Mechanical Characteristics

Weight (max.) —
3 oz. (85 grams)

Materials —
Case — Plastic, self-extinguishing, epoxy filled
Terminals — Brass, nickel-plated
Base Plate — Aluminum

NOTE: Do not exceed 125 in-oz when tightening screws.

Electrical Specifications (-55°C to +95°C unless otherwise specified)

Input	
Input supply voltage range (Vcc)	3.8 - 32 Vdc
Input current (max.) @ 5Vdc	16mAdc
Must turn-on voltage	3.8Vdc
Must turn-off voltage	1Vdc
Reverse voltage protection	-32Vdc
I/O	
Dielectric strength (min.)	1,500V rms/60 Hz.
Insulation resistance (min.) @ 500Vdc	10^8 ohms
Capacitance (max.)	15pF
Output	
Output current rating (max.)	10A rms (Fig. 2, Note 1)
Surge current (max.)	100A pk (Fig. 1, Note 2)
Continuous load voltage (max.)	250V rms
Transient blocking voltage (max.)	460V pk
Frequency range	45 - 440 Hz.
Output voltage drop (max.) @ 25A load current	1.5V rms
Off-state leakage current (max.) @ 220V rms/400 Hz.	9mA rms
Turn-on time (max.)	1/2 cycle
Turn-off time (max.)	1 cycle
Off-state dv/dt (min.), with snubber	200V /µs (Note 3)
Zero voltage turn-on window (max.)	±15V pk
Output chip junction temperature (max.)	125°C (Note 1)
Thermal resistance (max.), junction to ambient	11.5°C/W
Thermal resistance (max.), junction to case	2.0°C/W
Fusing I^2T, 1 ms (max.)	$150A^2s$
Load power factor (min.)	0.2
Power dissipation (max.)	1.5W/A

Notes

1. Operation at elevated load currents up to 10 amps is dependent on the use of suitable heatsink to limit junction temperature.
2. Heating of output chips during and after a surge may cause loss of output blocking capability until junction temperature falls below maximum rating.
3. Internal snubber network is provided across output chips.

Figure 1 - Peak Surge Current vs. Surge Current Duration

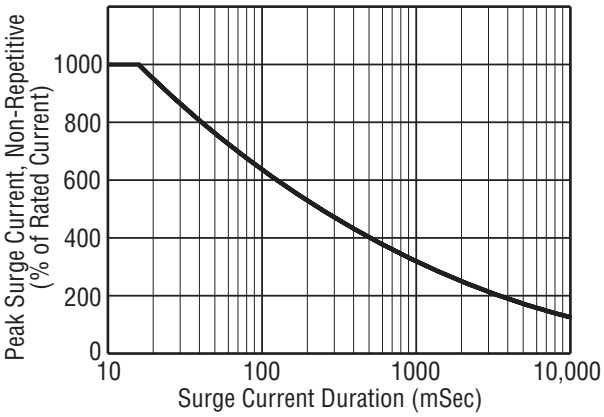

Figure 2 - Load Current vs. Temperature

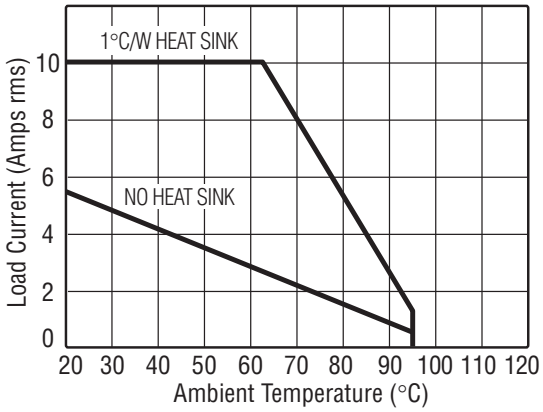

Catalog 5-1773450-5
Revised 3-13

www.te.com

Dimensions are shown for reference purposes only. Specifications subject to change.

Dimensions are in millimeters unless otherwise specified.

USA: +1 800 522 6752
Asia Pacific: +86 0 400 820 6015
UK: +44 800 267 666

For additional support numbers please visit www.te.com

JPS10 Series High Performance Solid State Relays For AC Loads up to 25A @ 250Vrms

Product Facts

- **Qualified to MIL-PRF-28750D (Mil Part Numbers M28750/10-001Y and M28750/10-002Y)**
- **Optically coupled all solid state relay**
- **TTL compatible input**
- **Zero voltage turn-on for low EMI**
- **Custom power package**

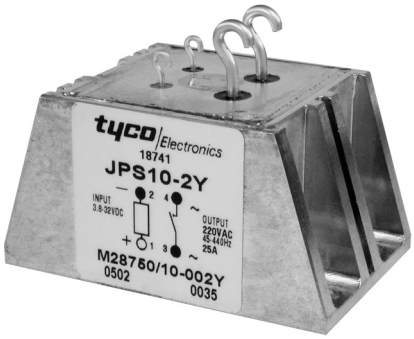

The JPS10 series solid state relay is designed for AC power switching up to 25 amps at 250Vrms. The circuit employs back-to-back photo SCRs with zero voltage turn-on for reliable switching of resistive or reactive loads. TTL compatible input circuitry is optically isolated to 1,500Vrms from the AC load circuit. The relay is offered in two versions: the JPS10-1Y with a maximum zero voltage turn-on window of 15 volts (preferred version for resistive loads), and the JPS10-2Y with a maximum window of 40 volts (preferred version for reactive loads).

Kilovac Part Number	Military Part Number	Zero Crossing Window
JPS10-1Y	M28750/10-001Y	15 V pk max.
JPS10-2Y	M28750/10-002Y	40 V pk max.

Circuit Diagram

Terminal View

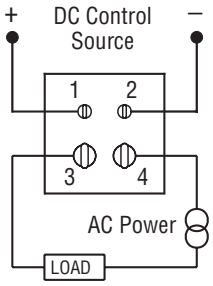

Outline Drawing

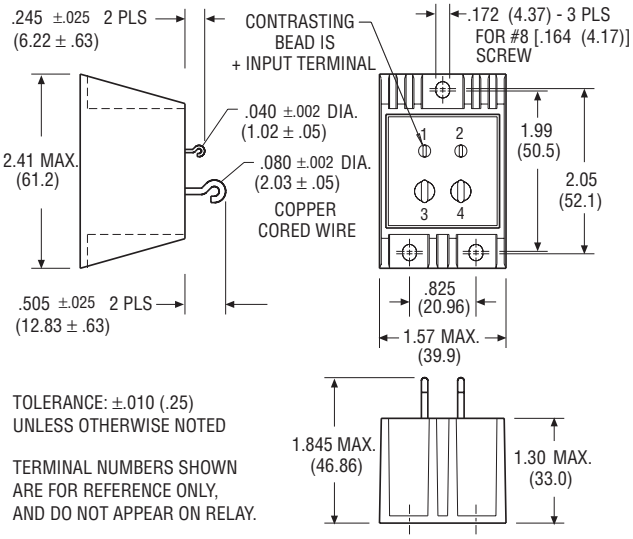

Catalog 5-1773450-5
Revised 3-13

www.te.com

Dimensions are shown for reference purposes only. Specifications subject to change.

Dimensions are in millimeters unless otherwise specified.

USA: +1 800 522 6752
Asia Pacific: +86 0 400 820 6015
UK: +44 800 267 666

For additional support numbers please visit www.te.com

JPS10 Series High Performance Solid State Relays For AC Loads up to 25A @ 250Vrms (Continued)

Environmental Characteristics

Ambient Temperature Range —
Operating — -55°C to +110°C
Storage — -55°C to +125°C

Vibration Resistance —
30 G's, 10-3,000 Hz

Shock Resistance —
1,500 G's, 0.5 ms pulse

Constant Acceleration Resistance (Y1 axis) —
5,000 G's

Mechanical Characteristics

Weight (max.) —
6 oz. (170 grams)

Materials —
Case — Aluminum, hot tin dipped
Terminals — Copper cored wire, gold plated

Electrical Specifications (-55°C to +105°C unless otherwise specified)

Input	
Input supply voltage range (Vcc)	4 - 32 Vdc
Input current (max.)	16mAdc
Must turn-on voltage	4Vdc
Must turn-off voltage	1Vdc
Reverse voltage protection	-32Vdc
I/O	
Dielectric strength (min.)	1,500Vrms/60 Hz.
Insulation resistance (min.) @ 500Vdc	10^9 ohms
Capacitance (max.)	20pF
Output	
Output current rating (max.)	25Arms (Fig. 2, Note 1)
Surge current (max.)	80A pk (Fig. 1, Note 2)
Continuous load voltage (max.)	250Vrms
Transient blocking voltage (max.)	500V pk
Frequency range	45 - 440 Hz.
Output voltage drop (max.) @ 25A load current	1.5Vrms
Off-state leakage current (max.) @ 220Vrms/400 Hz.	10mArms
Turn-on time (max.)	1/2 cycle
Turn-off time (max.)	1 cycle
Off-state dv/dt (min.), with snubber	100V /µs (Note 3)
Zero voltage turn-on window (max.), JPS10-1Y	15V pk
Zero voltage turn-on window (max.), JPS10-2Y	40V pk
Waveform distortion (max.)	4Vrms
Output chip junction temperature (max.)	125°C (Note 4)
Thermal resistance (max.), junction to ambient	6.8°C/W
Thermal resistance (max.), junction to case	1.2°C/W

Notes

1. Operation at elevated load currents up to 25 amps is dependent on the use of suitable heatsink to maintain case temperature per Fig. 2.
2. Heating of output chips during and after a surge may cause loss of output blocking capability until junction temperature falls below maximum rating.
3. Internal snubber network is provided across output chips.
4. Case temperature measurement point is center of mounting surface.

Figure 1 - Peak Surge Current vs. Surge Current Duration

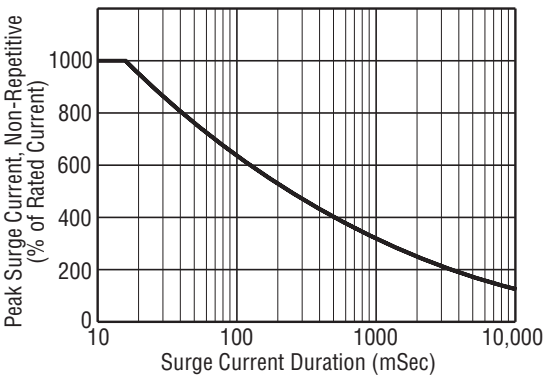

Figure 2 - Load Current vs. Temperature

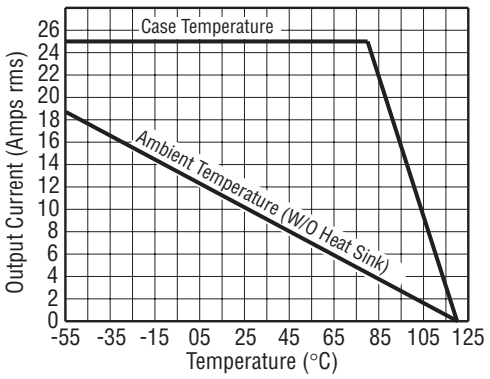

Catalog 5-1773450-5
Revised 3-13

www.te.com

Dimensions are shown for reference purposes only. Specifications subject to change.

Dimensions are in millimeters unless otherwise specified.

USA: +1 800 522 6752
Asia Pacific: +86 0 400 820 6015
UK: +44 800 267 666

For additional support numbers please visit www.te.com

Table of Contents

KILOVAC WD Series, DIN Rail or Screw Mounted Protective Relays
- Introduction 11-2
- KILOVAC WD25 Paralleling Relays 11-3
- KILOVAC WD2759 Over/Undervoltage Relays 11-4, 11-5
- KILOVAC WD32 Reverse Power Relays 11-6, 11-7
- KILOVAC WD47 Phase Sequence Relays 11-8
- KILOVAC WD5051 1Ø and 3Ø Overcurrent Relays 11-9, 11-10
- KILOVAC WD81OU Over/Underfrequency Relays 11-11

Voltage Sensitive Relays
- WUV/WOV DC Series 11-12
- WUV/WOV Series 11-13
- WUVT/WOVT Series 11-14
- WOUV DC Series, Over/Undervoltage 11-15
- WOUVT Series, Over/Undervoltage 11-16
- 250 Series, Over/Undervoltage 11-17
- D100X Series, Close Differential 11-18
- D101X Series, 3 Phase Adjustable, Close Differential 11-19

Reverse Power Relay
- 700 Series w/ Adjustable Time Delay 11-20

Phase Failure Relay
- 1000 Series 11-21

Phase Sequence Relay
- 900 Series 11-22

Current Balance Relay
- WCB Series 11-23

Current Sensitive Relays
- WC1 & WCT1 Series, Overcurrent 11-24
- WC3 & WCT3 Series, Overcurrent 11-25

Current Differential Relay
- WCD Series 11-26

Paralleling Relays
- 1800 Series 11-27
- Selection Guide 11-27

Frequency Sensitive Relays
- WOF & WUF Series 11-28
- WOUF Series, Over/Underfrequency 11-29
- 20-000 Series 11-30
- 25-000 Series 11-31
- 20-050-19 Series (Voltage/Frequency) 11-32

Ground Fault Relays
- WGD Series — Floating Ground 11-33
- WC1G Series — Grounded 11-34

Additional Relays . . . . . 11-35 – 11-43

Catalog 5-1773450-5
Revised 3-13

www.te.com

Dimensions are shown for reference purposes only. Specifications subject to change.

Dimensions are in millimeters unless otherwise specified.

USA: +1 800 522 6752
Asia Pacific: +86 0 400 820 6015
UK: +44 800 267 666

For additional support numbers please visit www.te.com

KILOVAC WD Series, DIN Rail or Screw Mounted Protective Relays

Product Facts

- **WD25 Paralleling (Synch Check) Relays**
- **WD2759 Over/undervoltage Relays**
- **WD32 Reverse Power Relays**
- **WD47 Phase Sequence Relays**
- **WD5051 Single- or Three-Phase Overcurrent Relays**
- **WD810U Over/Underfrequency Relays**
- **File E58048, DIN EN50022-35**

Users should thoroughly review the technical data before selecting a product part number. It is recommended that user also seek out the pertinent approvals files of the agencies/laboratories and review them to ensure the product meets the requirements for a given application.

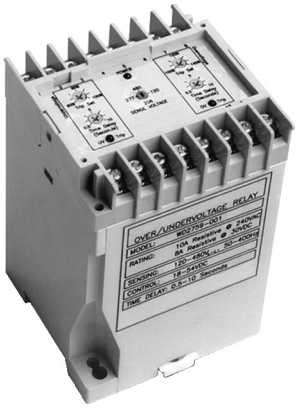

The WD series offers several different models of protective relays in a common package that is suitable for either DIN rail or screw mounting. These flexible, multifunction devices offer user selectable voltages, sense currents and frequencies. Adjustable time delays are standard. This allows a single part number to be suitable for multiple applications, thereby reducing inventory costs.

Specifications Common to All Models

Power Consumption — 2.5VA, maximum.

Contact Ratings — 5 amps, resistive, at 120VAC. 5 amps, resistive, at 30VDC.

Isolation from Control to Sense Inputs — 2,500VAC.

Mechanical Life — 10 million operations.

Shock — 10g.

Vibration — 0.062 (1.57) double amplitude at 10-55 Hz.

Terminals — M3.5 screws.

Maximum Wire Size — 2 x 24 AWG (2.5mm^2) solid to DIN 46288 or 2 x 16 AWG (1.5mm^2) stranded w/end sleeves.

Operating Temperature Range — -40°C to +60°C.

Enclosure — Plastic case (not sealed).

Mounting Options — Snap mounts on standard DIN rail (DIN-EN 50022-35) or panel mounts with M4, M5, #8 or #10 screws.

Weight — 14.4 oz. (400g) approximately.

Installation and Maintenance Information

Installation — To mount the WD series protective relay on a DIN rail, hook the top edge of the cutout on the base of the case over one edge of the DIN rail, then press the opposite side of the cutout containing the release clip over the opposite side of the DIN rail. To remove or reposition the relay, lever the release clip and move the relay as required. WD series relays should be installed in a dry location where the ambient temperature will be within the operating temperature range.

Maintenance — WD series protective relays are solid state devices that require no maintenance. They are not designed to be serviced by the user. Consult KILOVAC customer service at 805-220-2023 if repairs should be necessary.

Outline Dimensions

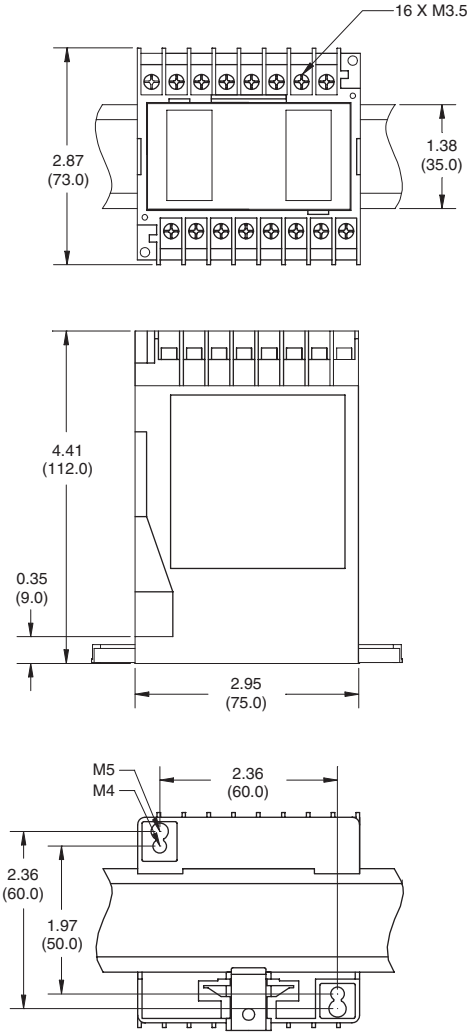

Catalog 5-1773450-5
Revised 3-13

www.te.com

Dimensions are shown for reference purposes only. Specifications subject to change.

Dimensions are in millimeters unless otherwise specified.

USA: +1 800 522 6752
Asia Pacific: +86 0 400 820 6015
UK: +44 800 267 666

For additional support numbers please visit www.te.com

KILOVAC WD25 Paralleling Relays

Product Facts

- **Function 25**
- **ANSI/IEEE C37.90-1978**

WD25 Operation

WD25 paralleling relays are used to ensure that two circuits are synchronized. When voltage, phase relationship and frequency are within the selected synchronizing limits, the output relay will energize. The WD25 paralleling relay allows for a generator to be brought online without damage or system disturbance. WD25 series with a "dead bus" feature will energize for a synchronized condition or an "on line" generator, "dead bus" condition. This "dead bus" feature allows the generator to energize a dead bus. The "double dead bus" feature permits paralleling of two buses when: (a) both the line voltages are equal and in phase, or (b) when either bus is "hot" and the other bus is "dead."

WD25 Specifications

Nominal Operating Range — 120, 208, 277 or 480 VAC, selectable.

Maximum Sensing Range — 575VAC.

Nominal Frequency Range — 40-400 Hz.

Contact Form — 2 form C (DPDT).

WD25 Calibration

The calibration marks on the faceplate are provided only as guides. Proper calibration requires using an accurate voltmeter. Use the following procedure to calibrate the WD25:

1. Remove the cover.
2. Adjust the SYNC VOLTAGE control fully counterclockwise (CCW). Apply nominal voltage to the LINE B (bus) sensing terminals.
3. Apply the maximum desired synchronization voltage to the LINE A (generator) terminals. This voltage should be in phase with LINE B (bus) voltage and have the same frequency.
4. Slowly adjust the SYNC VOLTAGE control clockwise (CW) until the relay energizes.

Sense Voltage

Voltage (nominal)	120	208	277	480
Synch Voltage (% of nom.)	6 - 30% (≈ 4°- 20° electrical degree)			
Dead Bus Voltage (% of nom.)	10 - 70% (Dead Bus)			

Control Voltage

Model WD25	-0X1	-0X2	-0X3
Input Voltage (VDC)	18 to 54	13.5 to 32	100 to 200
Input Voltage (VAC)	—	—	100 to 140

WD25 Controls

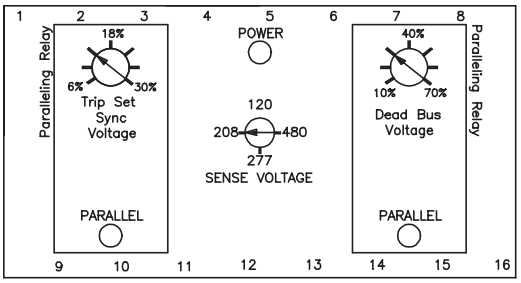

WD25 Connections

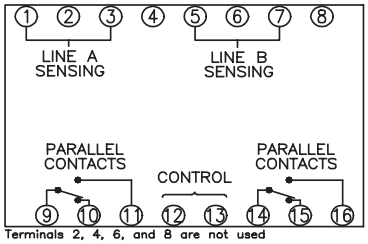

WD25 Typical Hookup

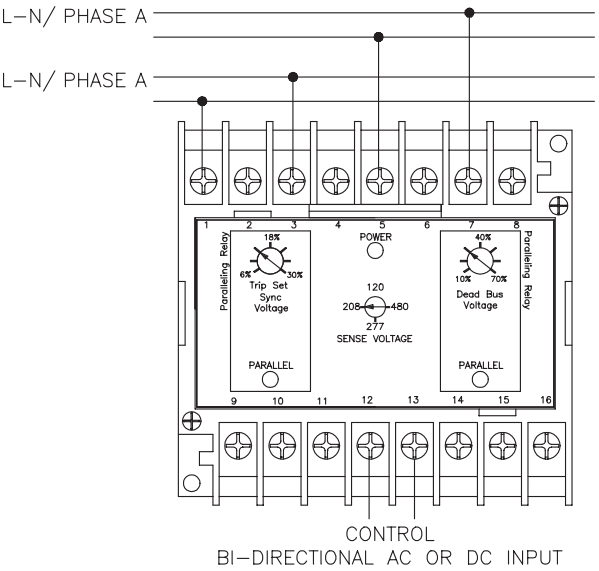

NOTE: For single dead bus option, connect the generator to 1 & 3 and the bus to 5 & 7.

Ordering Information

Typical Part Number ▶ **WD 25 -00 2**

1. Basic Series:
WD = DIN mount Protective Relay.

2. Type:
25 = Paralleling Relay.

3. Dead Bus:
00 = Double Dead Bus
01 = Single Dead Bus
02 = Generator to Generator

4. Control Voltage:
1 = 18 to 54VDC
2 = 13.5 to 32 VDC
3 = 100-200VDC or 100-140VAC.

Our authorized distributors are more likely to stock these items.

WD25-001
WD25-013

Catalog 5-1773450-5
Revised 3-13

www.te.com

Dimensions are shown for reference purposes only. Specifications subject to change.

Dimensions are in millimeters unless otherwise specified.

USA: +1 800 522 6752
Asia Pacific: +86 0 400 820 6015
UK: +44 800 267 666

For additional support numbers please visit www.te.com

KILOVAC WD2759 Over/Undervoltage Relays

Product Facts

- **Function 27/59**
- **ANSI/IEEE C37.90-1978**

WD2759 Operation

WD2759 AC voltage sensing relays provide voltage monitoring and protection in AC systems from 50 to 400 Hz. Sensing voltages, number of phases, over and undervoltage setpoint, and time delays are user configured. WD2759 voltage relays operate when the externally adjustable trip point is reached. An external time delay control is provided with an adjustment of .5 to 10 seconds. This time delay may be used to prevent false tripping when there are slight variations in the voltage supply. On overvoltage (OV) the output relay energizes when the input signal exceeds the trip point. On undervoltage (UV) the output relay energizes when the input signal goes below the trip point. A green LED indicates power to the relay. Red LED lights indicate the state of the undervoltage and overvoltage trips.

Sense Voltage

Voltage (nominal)	120	208	277	480
UV Adjustment Range	72-120	125-208	166-277	288-480
OV Adjustment Range	120-168	208-291	277-388	480-672

Control Voltage

Model WD2759	-001	-002	-003
Input Voltage (VDC)	18 to 54	13.5 to 32	100 to 200
Input Voltage (VAC)	—	—	100 to 140

WD2759 Specifications

Nominal Operating Range — 120, 208, 277 or 480 VAC, selectable.

Maximum Sensing Range — 700VAC.

Nominal Frequency Range — 50-400 Hz.

Contact Form — 1 form C (SPDT) for undervoltage and 1 form C (SPDT) for overvoltage.

Time Delay Adjustment — 0.5 to 10 sec.

WD2759 Calibration

The calibration marks on the faceplate have a maximum error of 10% and are provided only as guides. Proper calibration requires using an accurate voltmeter in parallel with the input signal. Use the following procedure to calibrate your relay.

OVER VOLTAGE

1. Remove cover.
2. Adjust the TRIP SET control fully clockwise (CW) and the TIME DELAY control fully counterclockwise (CCW).
3. Apply the desired trip voltage to the relay.
4. Slowly adjust the TRIP SET control CCW until the relay trips.
5. Remove the applied voltage (do not change the voltage level) and set the TIME DELAY control to the desired time delay.
6. Apply the trip voltage to the relay and measure the time to trip.
7. Adjust the TIME DELAY and repeat steps 4 and 5 until you have the desired time delay.

UNDER VOLTAGE

1. Remove cover.
2. Adjust the TRIP SET control fully CCW and the TIME DELAY control fully CCW.
3. Decrease the applied sensing voltage from the nominal value until the desired tripping voltage is reached.
4. Slowly adjust the TRIP SET control CW until the relay trips.
5. Set the TIME DELAY control to the desired time delay and apply nominal voltage to the relay.
6. Step down the applied voltage from nominal to a level jest below the trip level set in Step 3 and measure the time delay.
7. Adjust the TIME DELAY and repeat steps 4 and 5 until the desired time delay is achieved.

Ordering Information

Typical Part Number ▶ **WD 2759 -002**

1. Basic Series:
WD = DIN mount Protective Relay.

2. Type:
2759 = Over/Undervoltage Relay.

3. Control Voltage:
001 = 18 to 54VDC
002 = 13.5 to 32 VDC
003 = 100-200VDC or 100-140VAC.

Our authorized distributors are more likely to stock these items.

WD2759-003

Catalog 5-1773450-5
Revised 3-13

www.te.com

Dimensions are shown for reference purposes only. Specifications subject to change.

Dimensions are in millimeters unless otherwise specified.

USA: +1 800 522 6752
Asia Pacific: +86 0 400 820 6015
UK: +44 800 267 666

For additional support numbers please visit www.te.com

KILOVAC WD2759 Over/Undervoltage Relays (Continued)

WD2759 Controls

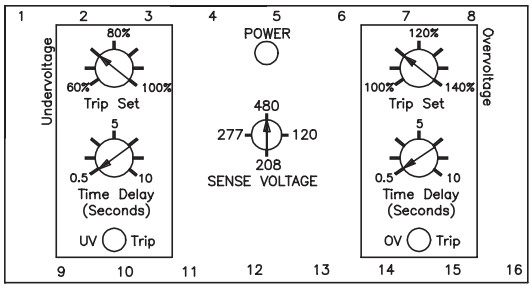

WD2759 Connections

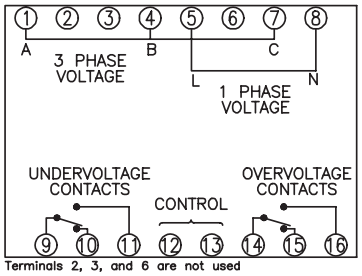

WD2759 Typical Hookup

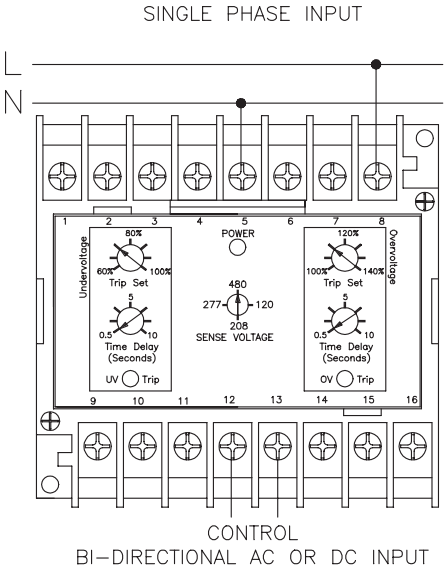

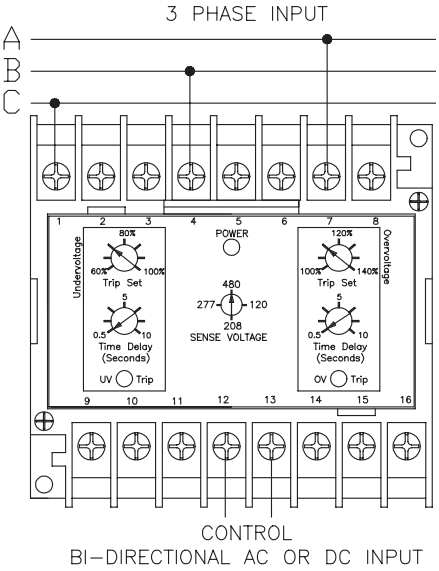

Catalog 5-1773450-5
Revised 3-13

www.te.com

Dimensions are shown for reference purposes only. Specifications subject to change.

Dimensions are in millimeters unless otherwise specified.

USA: +1 800 522 6752
Asia Pacific: +86 0 400 820 6015
UK: +44 800 267 666

For additional support numbers please visit www.te.com

KILOVAC WD32 Reverse Power Relays

Product Facts

- **Function 32**

WD32 Operation

WD32 reverse power relays are used to monitor the direction of power from AC generators. This is accomplished by measuring I cos q. If current from the generator is reversed and exceeds the adjustable setting, the relay will trip. A 0.5 to 20 second time delay is provided. A correct setting of the trip point and time delay will prevent motorizing the generator and prevent tripping during transients that occur while synchronizing. A POWER LED indicates the condition of the power supply and a REVERSE POWER TRIP LED indicates the output status of the relay.

WD32 Specifications

Nominal Operating Range — 120 to 480 VAC, 1 or 3 phase.

Maximum Sensing Range — 575VAC.

Nominal Sensing Current — 5A.

Nominal Frequency Range — WD32-00X — 40-400 Hz.; WD32-01X — 60 Hz.

Contact Form — 2 form C (DPDT).

Time Delay Adjustment — 0.5 to 20 sec.

Sense Current — Reverse Power Trip: 0.2 to 1.0A (4-20% of nominal sense current).

Control Voltage

Model WD32	-001	-002	-003
Input Voltage (VDC)	18 to 54	13.5 to 32	100 to 200
Input Voltage (VAC)	—	~	100 to 140

WD32 Calibration

The calibration marks on the faceplate have a maximum error of 10% and are provided only as guides. Proper calibration requires using an accurate Current Meter in series with the input current. Use the following procedure to calibrate your relay.

REVERSE POWER

1. Remove cover.
2. Adjust the TRIP SET control fully clockwise (CW) and the TIME DELAY control fully counterclockwise (CCW).
3. Apply the desired trip current to the relay. NOTE: for the Reverse Power (WD32-00X) a resistive load must be used and for the Reverse kVAR (WD32-01X) an inductive load must be used.
4. Slowly adjust the TRIP SET control CCW until the relay trips.
5. Remove the applied Current and set the TIME DELAY control to the desired time delay.
6. Re-apply the Current (10% more than the trip current) to the relay and measure the time to trip.
7. Adjust the TIME DELAY and repeat steps 4 and 5 until you have the desired time delay.

Ordering Information

Typical Part Number ▶ **WD 32 -00 2**

1. Basic Series:
WD = DIN mount Protective Relay.

2. Type:
32 = Reverse Power Relay.

3. Load:
00 = Resistive (power)
01 = Inductive (kVAR, 60 Hz.)

4. Control Voltage:
1 = 18 to 54VDC
2 = 13.5 to 32 VDC
3 = 100-200VDC or 100-140VAC.

Our authorized distributors are more likely to stock these items.

WD32-003
WD32-011

Catalog 5-1773450-5
Revised 3-13

www.te.com

Dimensions are shown for reference purposes only. Specifications subject to change.

Dimensions are in millimeters unless otherwise specified.

USA: +1 800 522 6752
Asia Pacific: +86 0 400 820 6015
UK: +44 800 267 666

For additional support numbers please visit www.te.com

KILOVAC WD32 Reverse Power Relays (Continued)

WD32 Controls

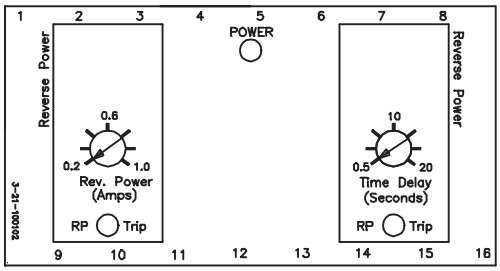

WD32 Connections

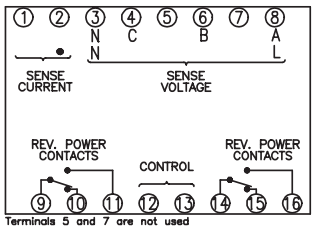

WD32 Typical Hookup

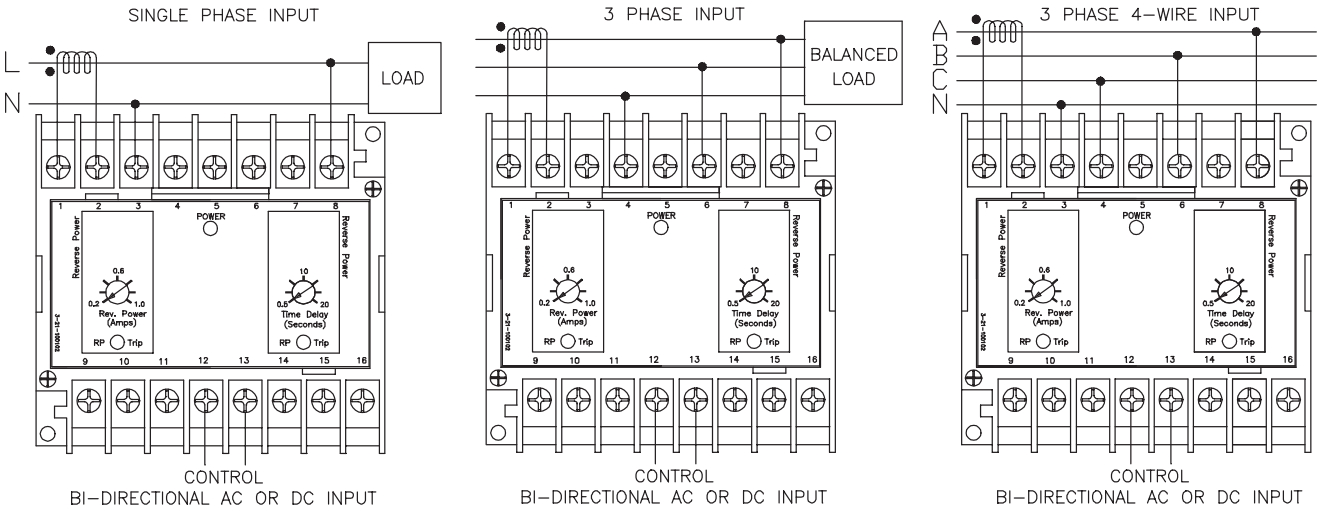

Dimensions are shown for reference purposes only. Specifications subject to change.

Dimensions are in millimeters unless otherwise specified.

USA: +1 800 522 6752
Asia Pacific: +86 0 400 820 6015
UK: +44 800 267 666

For additional support numbers please visit www.te.com

KILOVAC WD47 Phase Sequence Relays

Product Facts

- **Function 47**
- **ANSI/IEEE C37.90-1978**

Control Voltage

Model WD47	-001	-002	-003
Input Voltage (VDC)	18 to 54	13.5 to 32	100 to 200
Input Voltage (VAC)	—	—	100 to 140

WD47 Operation

WD47 phase sequence relays are designed to monitor the correct phase rotation and loss of phase of three phase ac systems from 50 to 400 Hz. An incorrect phase sequence or loss of any phase will cause the WD47 to pickup. When the phase sequence is corrected or the lost phase is restored the contacts dropout. Red LED's light to indicate a fault condition. A green LED indicates power to the relay. The WD47 is often used to detect reverse phase rotation or loss of phase to generators, busses, motors, and transformers.

WD47 Specifications

Nominal Operating Range — 120 to 480 VAC.

Maximum Sensing Range — 575VAC.

Nominal Frequency Range — 40-400 Hz.

Contact Form — 2 form C (DPDT).

WD47 Calibration

The WD47 has no adjustments and no calibration is necessary. Proper operation may be verified as follows:

1. Apply a nominal, three-phase input with the correct phase sequence. The output relay should dropout and the green LED should light.
2. Apply a nominal, three-phase input with an incorrect phase sequence. The output relay should pickup and the red LED should light.
3. Apply only one or two phases with the correct phase sequence. The output relay should pickup and the red LED should light.

WD47 Controls

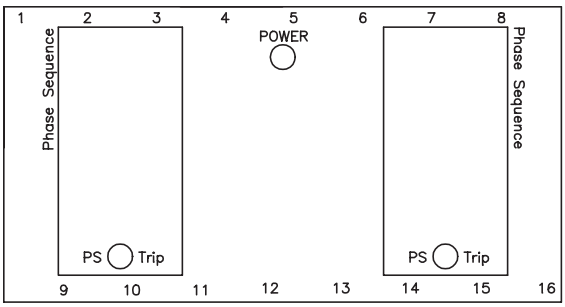

WD47 Connections

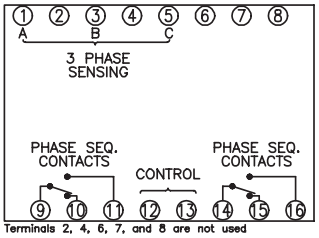

WD47 Typical Hookup

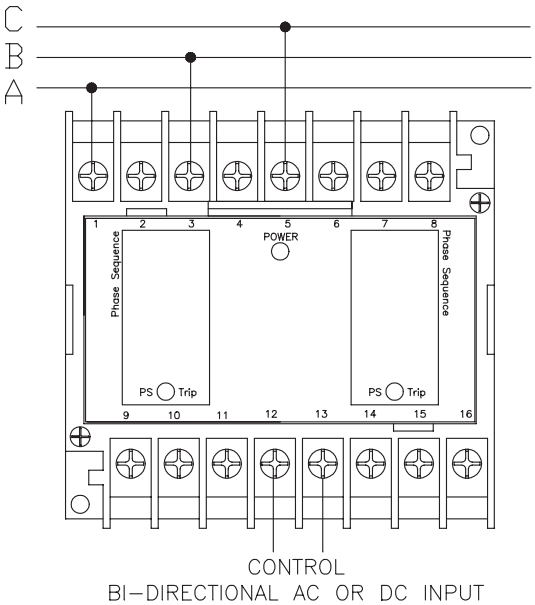

Ordering Information

Typical Part Number ▶ **WD 47 -002**

1. Basic Series:
WD = DIN mount Protective Relay.

2. Type:
47= Phase Sequence Relay.

3. Control Voltage:
001 = 18 to 54VDC
002 = 13.5 to 32 VDC
003 = 100-200VDC or 100-140VAC.

Our authorized distributors are more likely to stock these items.

WD47-001

Catalog 5-1773450-5
Revised 3-13

www.te.com

Dimensions are shown for reference purposes only. Specifications subject to change.

Dimensions are in millimeters unless otherwise specified.

USA: +1 800 522 6752
Asia Pacific: +86 0 400 820 6015
UK: +44 800 267 666

For additional support numbers please visit www.te.com

KILOVAC WD5051 1Ø and 3Ø Overcurrent Relays

Product Facts

- **Function 5051**

WD5051 Operation

WD5051 AC current sensing relays provide current monitoring and protection in AC systems from 50 to 400 Hz. Nominal Sensing Current, Instantaneous Over Current setpoint, Time Over Current setpoint, and Time Over Current time delay are user configured. WD5051 current relays operate when the externally adjustable trip point is reached. An external time over current time delay control is provided with an adjustment of .5 to 20 seconds. This time delay may be used to prevent false tripping when there are slight variations in the sensed current. With control power applied, the Instantaneous Over Current (IOC) contacts pick-up when the input signal exceeds the IOC trip setpoint. Similarly, with control power applied, the Time Over Current (TOC) contacts pick-up after the preset time delay when the Sense Current rises above the TOC trip setpoint. The IOC contacts may also be configured to function as an under current relay. A green LED indicates power to the relay. Red LED lights indicate the state of the IOC and TOC trips.

Sense Current

Current (nominal)	1	3	6	8
IOC	0.2 to 1.2	0.6 to 3.6	1.2 to 7.2	1.6 to 9.6
TOC	0.2 to 1.2	0.6 to 3.6	1.2 to 7.2	1.6 to 9.6

Control Voltage

Model WD5051	-001	-002	-003
Input Voltage (VDC)	18 to 54	13.5 to 32	100 to 200
Input Voltage (VAC)	—	—	100 to 140

WD5051 Specifications

Sense Current Full Scale — 1, 3, 6 or 8A, selectable.

Maximum Sensing Current — 10A continuous; 30A for 10 sec.; 60A for 2.5 sec.; 100A for 0.9 sec..

Nominal Frequency Range — 50-400 Hz.

Contact Form — 1 form C (SPDT) for IOC and 1 form C (SPDT) for TOC.

TOC Time Delay Adjustment — 0.5 to 20 sec.

IOC Operate Time (max.) — 0.2 sec.

WD5051 Calibration

The calibration marks on the faceplate are provided only as guides. Proper calibration requires using an accurate ammeter in series with the current source. Use the following procedure to calibrate your relay:

OVERCURRENT

1. Remove the cover.
2. Adjust the TRIP SET control fully clockwise (CW) and the TIME DELAY control (TOC only) fully counter-clockwise (CCW).
3. Apply the desired trip current to the relay.
4. Slowly adjust the TRIP SET control CCW until the relay trips.
5. Remove the applied current (do not change the current level). Set the TIME DELAY (TOC only) control to the desired time delay.

Ordering Information

Typical Part Number ▶ **WD 5051 -002**

1. Basic Series:
WD = DIN mount Protective Relay.

2. Type:
5051 = Single Phase Overcurrent Relay.
5051-3 = Three Phase Overcurrent Relay.

3. Control Voltage:
001 = 18 to 54VDC
002 = 13.5 to 32 VDC
003 = 100-200VDC 0r 100-140VAC.

Our authorized distributors are more likely to stock these items.

WD5051-001
WD5051-003
WD5051-3-001

Catalog 5-1773450-5
Revised 3-13

www.te.com

Dimensions are shown for reference purposes only. Specifications subject to change.

Dimensions are in millimeters unless otherwise specified.

USA: +1 800 522 6752
Asia Pacific: +86 0 400 820 6015
UK: +44 800 267 666

For additional support numbers please visit www.te.com

KILOVAC WD5051 1Ø and 3Ø Overcurrent Relays (Continued)

WD5051 Controls

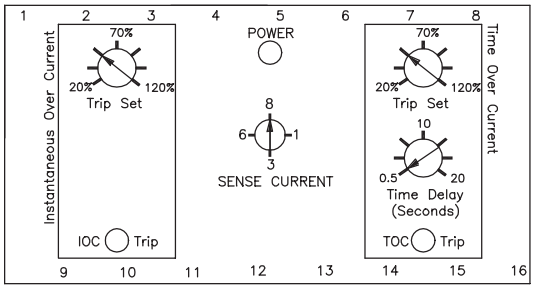

WD5051 Connections

WD5051
Single Phase Model

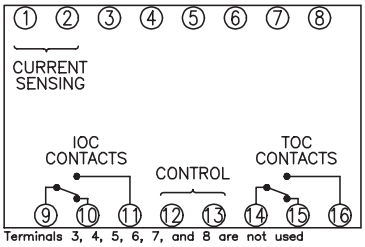

WD5051-3
Three Phase Model

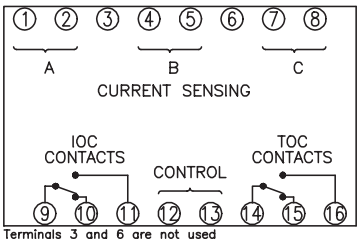

WD5051 Typical Hookup

WD5051
Single Phase Model

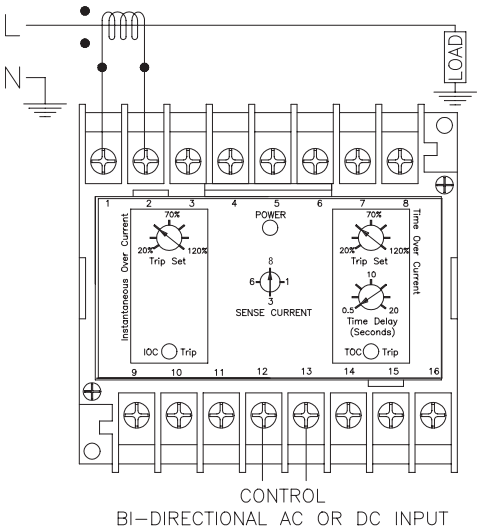

WD5051-3
Three Phase Model

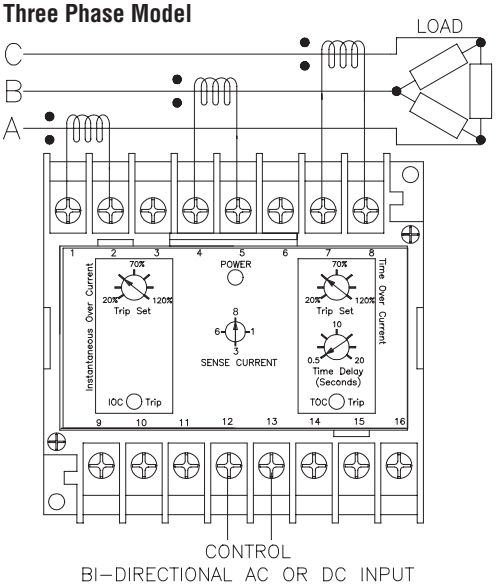

Catalog 5-1773450-5
Revised 3-13

www.te.com

Dimensions are shown for reference purposes only. Specifications subject to change.

Dimensions are in millimeters unless otherwise specified.

USA: +1 800 522 6752
Asia Pacific: +86 0 400 820 6015
UK: +44 800 267 666

For additional support numbers please visit www.te.com

KILOVAC WD81OU Over/Underfrequency Relays

Product Facts

- **Function 81 OU**
- **ANSI/IEEE C37.90-1978**

WD81OU Operation

WD81OU frequency relays are used to provide frequency monitoring and protection to generators, buses, power supplies, and other equipment. The relay operates at voltages from 120 to 480 Vac and at nominal frequencies of 50, 60, and 400 Hz. External controls include nominal frequency selection, under frequency (UF) trip set, over frequency (OF) trip set, UF time delay, and OF time delay. A green LED indicates power to the relay. Red LED's indicate the status of the UF and OF trips.

WD81OU Specifications

Nominal Operating Frequency — 50, 60 or 400 Hz., selectable.

Maximum Frequency @ 400 Hz. Nominal — 1000 Hz.

Nominal Sensing Voltage — 20-480VAC.

Maximum Sensing Voltage — 575VAC.

Contact Form — 1 form C (SPDT) for underfrequency and 1 form C (SPDT) for overfrequency.

Time Delay Adjustment — 0.5 to 10 sec.

WD81OU Calibration

The calibration marks on the faceplate are provided only as guides. Proper calibration requires using an accurate frequency meter in parallel with the input signal.

UNDER FREQUENCY

1. Remove the cover.
2. Set the SENSE FREQUENCY to the nominal system frequency. Adjust the Under Frequency TRIP SET fully clockwise (CW) and the TIME DELAY control fully counterclockwise (CCW).
3. Apply the desired trip frequency to the relay.
4. Slowly adjust the TRIP SET control CCW until the relay trips.
5. Set the TIME DELAY control to the desired time delay and apply nominal frequency to the relay.
6. Step down the applied frequency from nominal to just below the trip level set in Step 4 and measure the time delay.
7. Adjust the TIME DELAY and repeat steps 5 and 6 until the desired time delay is set.

OVER FREQUENCY

1. Remove the cover.
2. Set the SENSE FREQUENCY to the nominal system frequency. Adjust the OF TRIP SET and TIME DELAY controls fully counterclockwise (CCW).
3. Apply the desired trip frequency to the relay.
4. Slowly adjust the TRIP SET control clockwise (CW) until the relay trips.
5. Set the TIME DELAY control to the desired time delay and apply nominal frequency to the relay.
6. Step down the applied frequency from nominal to just below the trip level set in Step 4 and measure the time delay.
7. Adjust the TIME DELAY and repeat steps 5 and 6 until the desired time delay is set.

Sense Frequency

Frequency (nominal)	50	60	400
UF Adjustment Range	40-50	48-60	360-400
OF Adjustment Range	50-60	60-72	400-480

Control Voltage

Model WD81OU	-001	-002	-003
Input Voltage (VDC)	18 to 54	13.5 to 32	100 to 200
Input Voltage (VAC)	—	—	100 to 140

WD81OU Controls

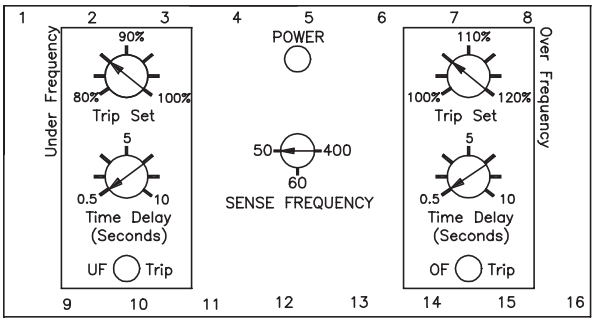

WD81OU Connections

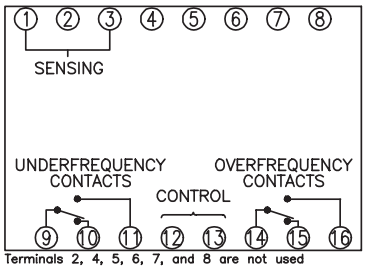

WD81OU Typical Hookup

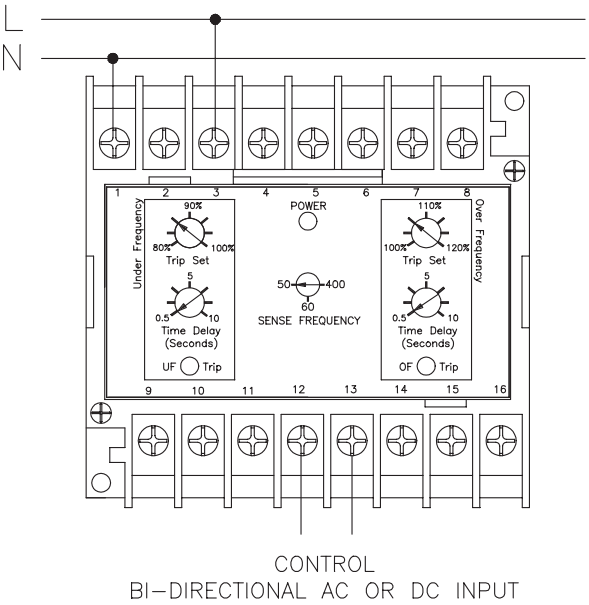

Ordering Information

Typical Part Number ▶ **WD 81OU-002**

1. **Basic Series:**
   WD = DIN mount Protective Relay.
2. **Type:**
   81OU = Over/Underfrequency Relay.
3. **Control Voltage:**
   001 = 18 to 54VDC
   002 = 13.5 to 32 VDC
   003 = 100-200VDC or 100-140VAC.

Our authorized distributors are more likely to stock these items.

None at present.

Catalog 5-1773450-5
Revised 3-13

www.te.com

Dimensions are shown for reference purposes only. Specifications subject to change.

Dimensions are in millimeters unless otherwise specified.

USA: +1 800 522 6752
Asia Pacific: +86 0 400 820 6015
UK: +44 800 267 666

For additional support numbers please visit www.te.com

WUV/WOV DC Series

Product Facts

- **ANSI/IEEE C37.90-1978**

Undervoltage Models

The relay is energized at normal voltage, N.C. contacts will open and N.O. contacts will close. The relay will de-energize when the voltage drops below the U/V set point.

Overvoltage Models

The relay is de-energized at normal voltage, N.C. contacts are closed and N.O. contacts are open. The relay will energize, when the voltage rises above the O/V set point.

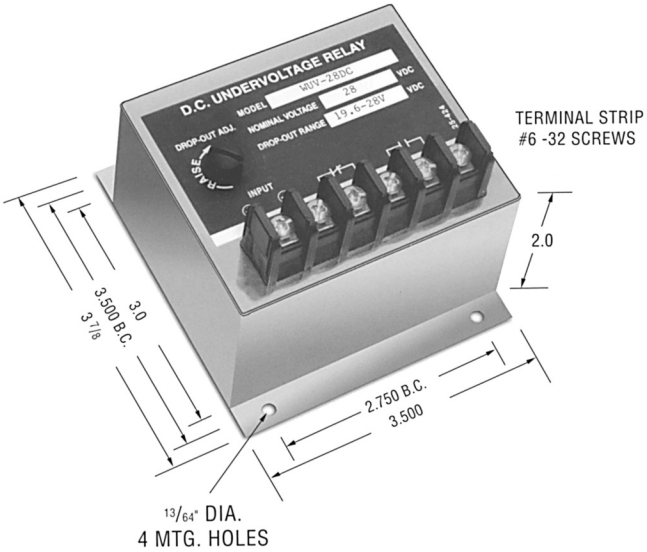

Note: Dimensions in inches. Multiply values by 25.4 for dimensions in mm.

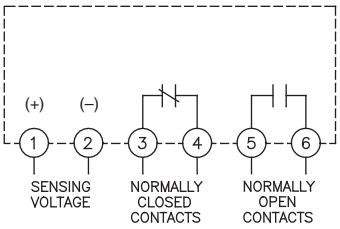

Product Specifications

Nominal Voltage — 12 VDC to 560 VDC

Drop-out Point (u/v models) — 70-100% of nominal voltage, screwdriver adjustable

Pick-Up Point (o/v models) — 100-125% of nominal voltage, screwdriver adjustable

Output Contacts — One set N.O., One set N.C.

Contact Ratings — 5 amp resistive at 120 VAC or 28 VDC

Operating Temperature Range — -40˚C to +75˚C

Temperature Effects — Less than 1% voltage drift over the temperature range

Power Consumption —
12 to 60 VDC models — 1 W max.
120 to 305 VDC models — 2 W max.
405 to 470 VDC models — 3 W max.
560 VDC model — 4 W max.

Time Delay — A short duration delay is provided to prevent nuisance tripping due to momentary dips or surges in voltage. The drop-out delay, following a voltage fault is 75 to 100 milliseconds.

Notes:
1. Remove black screws for access to the O/V and U/V trip adjustment.
2. Clockwise rotation of the adjustment potentiometer will raise the voltage trip point.
3. The adjustments are by means of a single turn potentiometer. Use a small screwdriver and do not force beyond the limit stops.

Ordering Information

Sample Part Number ▶ **WOV-12DC -A**

Type:
WOV - Overvoltage
WUV - Undervoltage

Line Voltage VDC

12DC	125DC
18DC	240DC
24DC	250DC
28DC	305DC
32DC	405DC
48DC	430DC
60DC	470DC
120DC	560DC

Options:
Blank - Standard
A = 2 Form A Contacts
B = 2 Form B Contacts
H = 125 VDC Contacts
P = Transient Protection

Time Curves DC Overvoltage Relays

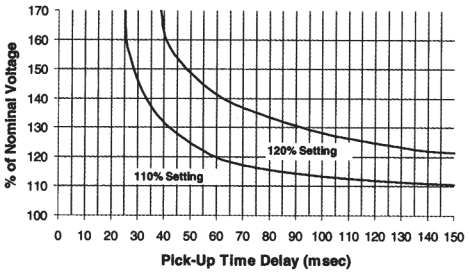

Transient Protection — All voltage relays will withstand momentary voltage surges of twice the nominal rated input voltage (standard).

Option "P" provides additional transient protection which complies with the requirements of ANSI/IEEE C37.90-1978

Consult factory for additional models.

Catalog 5-1773450-5
Revised 3-13

www.te.com

Dimensions are shown for reference purposes only. Specifications subject to change.

Dimensions are in millimeters unless otherwise specified.

USA: +1 800 522 6752
Asia Pacific: +86 0 400 820 6015
UK: +44 800 267 666

For additional support numbers please visit www.te.com

WUV/WOV Series

Product Facts

- **Function 27/59**
- **ANSI/IEEE C37.90-1978**
- **UL File No. E58048**
- **CSA File No. LR61158**

Voltage sensitive relays are available for both AC and DC applications for over/undervoltage protection. Combination over/undervoltage relays provide bandpass capabilities. AC relays are either single or three-phase type. Three phase models are designed to sense the average of the three phases or the highest single phase. Voltage trip points are screwdriver adjustable, and operation is time-delayed so that momentary voltage transients will not cause nuisance tripping.

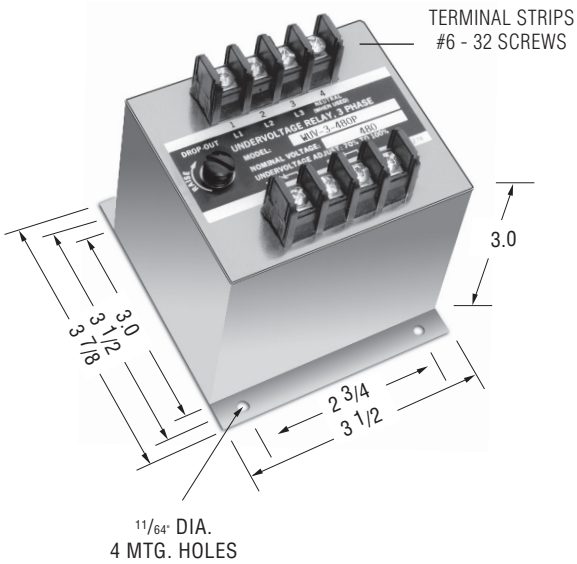

Note: Dimensions in inches. Multiply values by 25.4 for dimensions in mm.

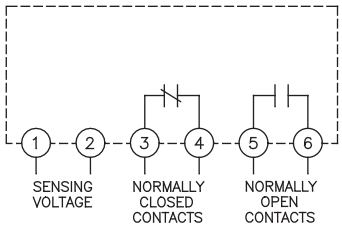

Single Phase

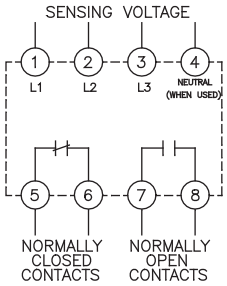

Three Phase

Product Specifications

Nominal Voltage — 120 VAC to 575 VAC

Phase — Single or Three

Line Frequency — 50-400 Hz

Pick-up to Drop-out Differential — 2.5% maximum

Drop-out Point (u/v models) — 70-100% of nominal voltage, screwdriver adjustable

Pick-Up Point (o/v models) — 100-125% of nominal voltage, screwdriver adjustable

Output Contacts — One set N.O., One set N.C.

Contact Ratings — 5 amp resistive at 120 VAC or 28 VDC

Operating Temperature Range — -20˚C to +65˚C

Power Consumption — 2 VA maximum

Time Delay — 150-300 ms (UV Model)

Minimum Life — 500,000 operations

Notes:
1. Remove black screw for access to the voltage trip adjustment.
2. Clockwise rotation of the adjustment potentiometer will raise the voltage trip point.

Ordering Information

Sample Part Number ▶ **WUV -1 -120**

Type:
WUV - Undervoltage
WOV - Overvoltage

No. Phases
1 = Single
3 = Three

Line Voltage VAC

120	416
208	440
220	460
230	480
240	525
380	575

Options
P - Transient Protection
A - Two Normally Open Contacts
B - Two Normally Closed Contacts
H - 125VDC, 3A Contacts

Typical Time Curve

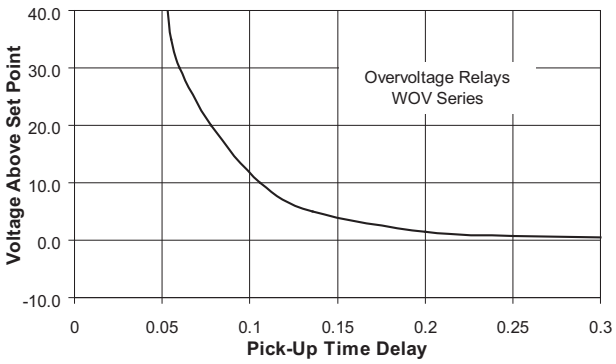

Transient Protection — All voltage relays will withstand momentary voltage surges of twice the nominal rated input voltage (standard).

Option "P" provides additional transient protection which complies with the requirements of ANSI/IEEE C37.90-1978

Consult factory for additional models.

Catalog 5-1773450-5
Revised 3-13

www.te.com

Dimensions are shown for reference purposes only. Specifications subject to change.

Dimensions are in millimeters unless otherwise specified.

USA: +1 800 522 6752
Asia Pacific: +86 0 400 820 6015
UK: +44 800 267 666

For additional support numbers please visit www.te.com

WUVT/WOVT Series

Product Facts

- **Function 27/59**
- **ANSI/IEEE C37.90-1978**
- **UL File No. E58048**
- **CSA File No. LR61158**

Undervoltage Models

The relay is energized at normal voltage, N.C. contacts will open and N.O. contacts will close. The relay will de-energize when the voltage drops and remains below the U/V set point for the duration of the set time delay.

Overvoltage Models

The relay is de-energized at normal voltages, N.C. contacts are closed and N.O. contacts are open. The relay will energize, when the voltage rises and remains above the O/V set point for the duration of the set time delay.

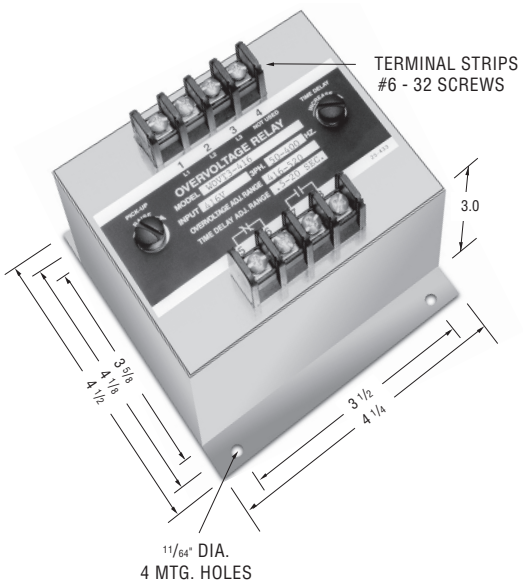

Note: Dimensions in inches. Multiply values by 25.4 for dimensions in mm.

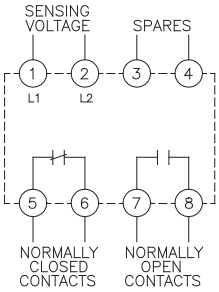

Single Phase

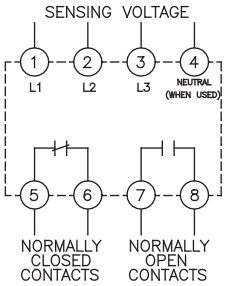

Three Phase

Ordering Information

Sample Part Number ▶ **WUVT -1 -120**

Type:
WUVT - Undervoltage
WOVT - Overvoltage

No. Phases
1 = Single
3 = Three (line to line)

Line Voltage VAC

100	240
115	380
120	416
150	440
200	460
208	480
220	525
230	575

Options:
Blank - Standard
A = 2 Form A Contacts
B = 2 Form B Contacts
H = 125VDC 3A Contacts
P = Transient Protection

Product Specifications

Nominal Voltage — 100 VAC to 575 VAC

Phase — Single or Three

Line Frequency — 50-400 Hz

Pick-up to Drop-out Differential — 1% typical

Drop-out Point (u/v models) — 70-100% of nominal voltage, screwdriver adjustable

Pick-Up Point (o/v models) — 100-125% of nominal voltage, screwdriver adjustable

Output Contacts — One set N.O., One set N.C.

Contact Ratings — 5 amp resistive at 120 VAC or 28 VDC

Operating Temperature Range — -40˚C to +70˚C

Power Consumption — 3 VA maximum

Time Delay — 0.5 to 20 seconds, screwdriver adjustable

Voltage Reset — The reset is automatic when voltage returns to normal.

Notes:
1. Remove black screws for access to the voltage and time delay adjustment potentiometer.
2. Clockwise rotation of the voltage adjust potentiometer will raise the voltage trip point.
3. Clockwise rotation of the time adjust potentiometer will increase the time delay (Pick-up time for O/V models, drop-out time for U/V models).
4. The adjustments are single turn potentiometers, use a small screwdriver and do not force beyond the limit stops.
5. On U/V models, when the voltage falls to approximately 33% of nominal or below, the relay will drop out in 0.150 to 0 .300 seconds, regardless of the time delay setting.

Transient Protection — All voltage relays will withstand momentary voltage surges of twice the nominal rated input voltage (standard).

Option "P" provides additional transient protection which complies with the requirements of ANSI/IEEE C37.90-1978

Consult factory for additional models.

Catalog 5-1773450-5
Revised 3-13

www.te.com

Dimensions are shown for reference purposes only. Specifications subject to change.

Dimensions are in millimeters unless otherwise specified.

USA: +1 800 522 6752
Asia Pacific: +86 0 400 820 6015
UK: +44 800 267 666

For additional support numbers please visit www.te.com

WOUV DC Series, Over/Undervoltage

Product Facts

- **ANSI/IEEE C37.90-1978**

The relay will energize at normal voltage conditions. The normally open contacts will close, and the normally closed contacts will open. The relay will de-energize during over or undervoltage conditions. Reset is automatic when the voltage returns to normal.

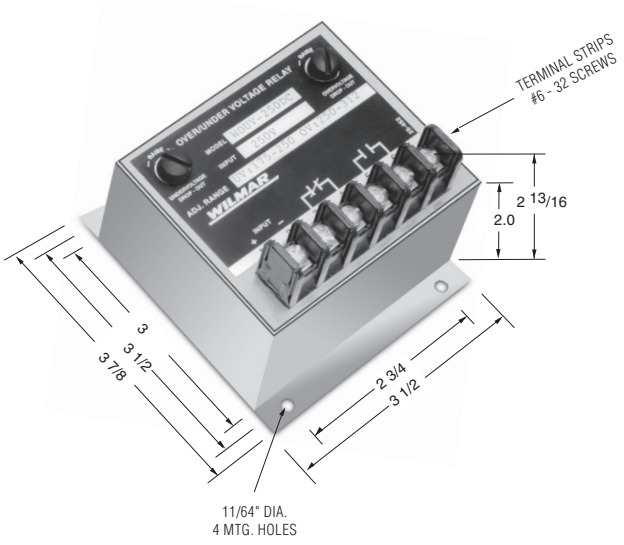

Note: Dimensions in inches. Multiply values by 25.4 for dimensions in mm.

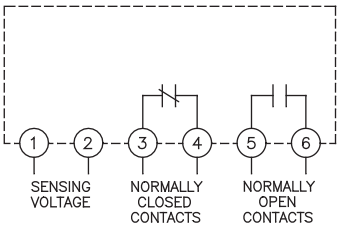

Single Phase

Product Specifications

Nominal Voltage (±10%) — 12 VDC to 560 VDC

Drop-out Point (u/v models) — 70-100% of nominal voltage, screwdriver adjustable

Pick-Up Point (o/v models) — 100-125% of nominal voltage, screwdriver adjustable

Output Contacts — One set N.O., One set N.C.

Contact Ratings — 5 amp resistive at 120 VAC or 28 VDC

Operating Temperature Range — -40˚C to +75˚C

Temperature Effects — Less than 1% voltage drift over the temperature range.

Power Consumption — 12 to 60 VDC models — 1 W max.
120 to 305 VDC models — 2 W max.
405 to 470 VDC models — 3 W max.
560 VDC Model — 4 W max.

Time Delay — A short duration delay is provided to prevent nuisance tripping due to momentary dips or surges in voltage. The drop-out delay, following a voltage fault is 75 to 100 milliseconds

Notes:
1. Remove black screws for access to the O/V and U/V trip adjustment.
2. Clockwise rotation of the adjustment potentiometer will raise the voltage trip point.
3. The adjustments are by means of a single turn potentiometer. Use a small screwdriver and do not force beyond the limit stops.

Ordering Information

Sample Part Number ▶ **WOUV -12DC -A**

Type:
WOUV - Over/Undervoltage

Line Voltage VDC

12DC	125DC
18DC	240DC
24DC	250DC
28DC	305DC
32DC	405DC
48DC	430DC
60DC	470DC
120DC	560DC

Options:
Blank - Standard
A = 2 Form A Contacts
B = 2 Form B Contacts
H = 125 VDC Contacts
P = Transient Protection

Drop-Out Time Delay WOUV...DC Series

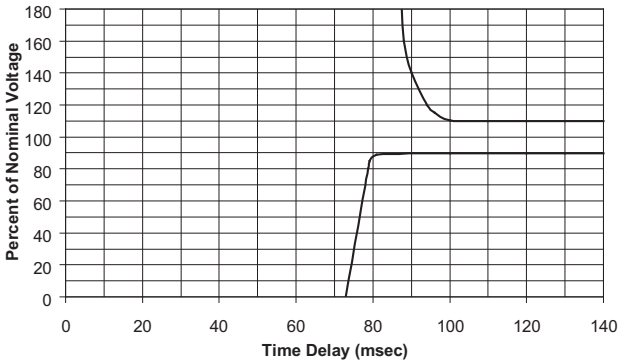

Transient Protection — All voltage relays will withstand momentary voltage surges of twice the nominal rated input voltage (standard).

Option "P" provides additional transient protection which complies with the requirements of ANSI/IEEE C37.90-1978

Consult factory for additional models.

Catalog 5-1773450-5
Revised 3-13

www.te.com

Dimensions are shown for reference purposes only. Specifications subject to change.

Dimensions are in millimeters unless otherwise specified.

USA: +1 800 522 6752
Asia Pacific: +86 0 400 820 6015
UK: +44 800 267 666

For additional support numbers please visit www.te.com

WOUVT Series, Over/Undervoltage

Product Facts

- **Function 27/59**
- **ANSI/IEEE C37.90-1978**

Voltage sensitive relays are available for both AC and DC applications for overvoltage and undervoltage protection. Combination over/undervoltage relays provide band-pass capabilities. AC relays are either single or three-phase type. Three phase relays are designed to sense the average of the three phases. Voltage trip points are screwdriver adjustable, and operation is time-delayed so that momentary voltage transients will not cause nuisance tripping.

Operation

The relay will energize at normal voltage condition. The normally closed contact (Form B) will open and the normally open (Form A) will close. The relay will de-energize after time delay when over or undervoltage condition is reached.

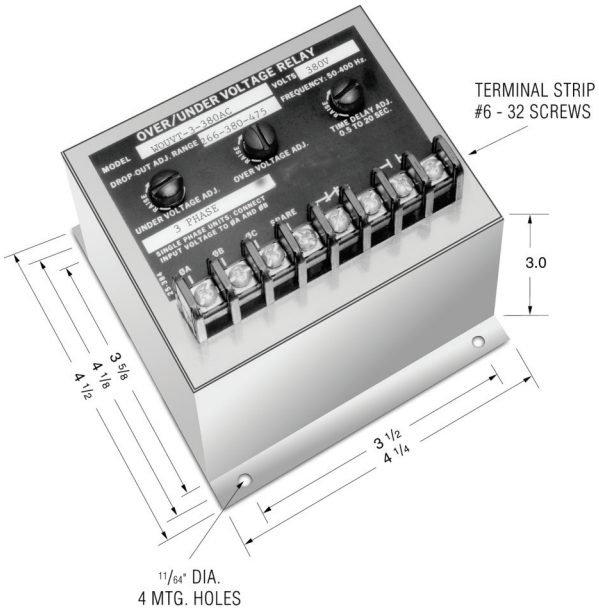

Note: Dimensions in inches. Multiply values by 25.4 for dimensions in mm.

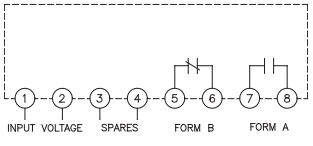

Single Phase Models

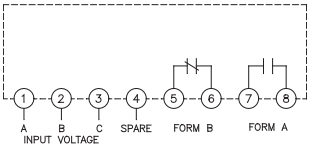

Three Phase Models

Product Specifications

Nominal Voltage — 120 VAC to 575 VAC

Phase — Single or Three

Line Frequency — 50-400 Hz

Type of Sensing — Average of all three phases

Undervoltage Trip — 70-100% of nominal voltage, screwdriver adjustable

Overvoltage Trip — 100-125% of nominal voltage, screwdriver adjustable

Drop-out Time Delay — 0.5 to 20 seconds, screwdriver adjustable

Pick-up to Drop-out Differential — 2% maximum

Output Contacts — One set N.O., One set N.C.

Contact Ratings — 5 amp resistive at 120 VAC or 28 VDC

Operating Temperature Range — -40˚C to +70˚C

Power Consumption — 4 VA maximum

Notes:

1. Remove black screw for access to the voltage trip and time delay adjustment potentiometer.
2. Clockwise rotation of the voltage adjustment potentiometer will raise the voltage trip point.
3. Clockwise rotation of the time adjustment potentiometer will increase the drop-out time delay.

Ordering Information

Sample Part Number ▶ **WOUVT -1 -120AC**

Type:
WOUVT - Over/Undervoltage

No. Phases
1 = Single
3 = Three (line to line)

Line Voltage VAC
115
120
200
208
220
230
240
380

Options:
Blank - Standard
A = 2 Form A Contacts
B = 2 Form B Contacts
H = 125 VDC Contacts
P = Transient Protection

Option "H" provides for contacts rating of 3 amps @ 125VDC.

Option "P" provides additional transient protection which complies with the requirements of ANSI/IEEE C37.90-1978

Consult factory for additional models.

Catalog 5-1773450-5
Revised 3-13

www.te.com

Dimensions are shown for reference purposes only. Specifications subject to change.

Dimensions are in millimeters unless otherwise specified.

USA: +1 800 522 6752
Asia Pacific: +86 0 400 820 6015
UK: +44 800 267 666

For additional support numbers please visit www.te.com

250 Series, Over/Undervoltage

Product Facts

- **Function 27/59**
- **ANSI/IEEE C37.90-1978**

The 250 series relays provide combined Overvoltage and Undervoltage protection in a single compact unit.

Models are available for single phase or three phase applications, and are suitable for either 50 Hz, 60 Hz, or 400 Hz operation. The trip point is adjustable.

A transistorized circuit provides a sharp and accurate response at the preset tripping voltage; unaffected by temperature or frequency variations.

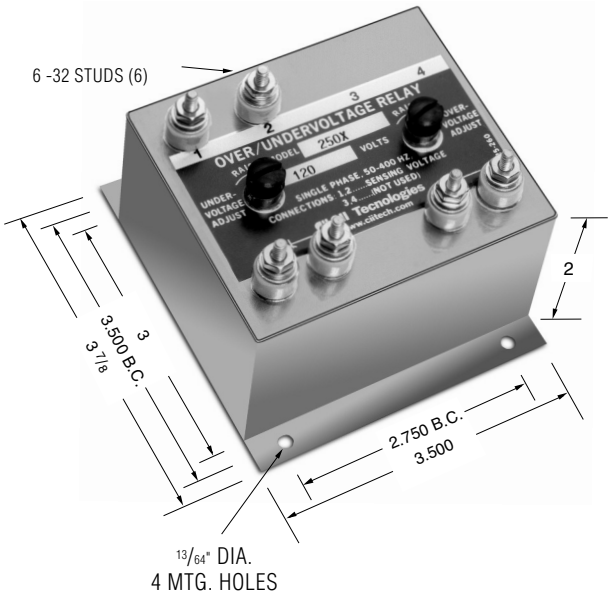

Note: Dimensions in inches. Multiply values by 25.4 for dimensions in mm.

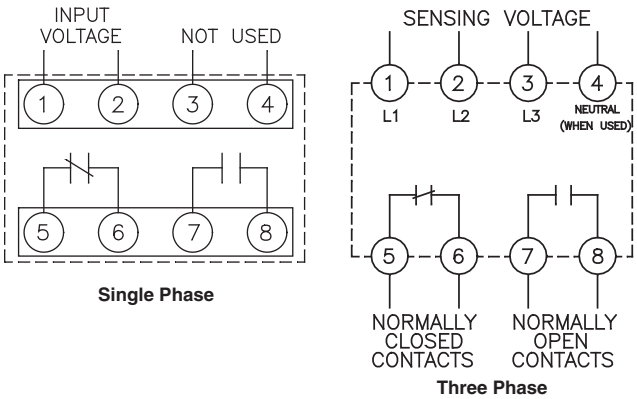

Product Specifications

Nominal Voltage — See Ordering Information

Undervoltage Trip — 70-100% of nominal voltage, screwdriver adjustable

Overvoltage Trip — 100-125% of nominal voltage, screwdriver adjustable

Pick-up to Drop-out Differential — 3% maximum

Contact Ratings — 5 amp resistive at 120 VAC or 28 VDC

Contact Form — One set N.O., one set N.C.

Operating Temperature Range — -20˚C to +85˚C

Notes:

1. Remove screws for access the overvoltage or undervoltage trip adjustments. Clockwise rotation of the adjustment potentiometer will raise the trip point.

Contact Arrangements

NC — Open at nominal voltage. Closed at Overvoltage and Undervoltage

NO — Closed at nominal voltage. Open at Overvoltage and Undervoltage

Ordering Information

Sample Part Number ▶ **250X**

Model: L-L Volts

250X = 120 VAC, 1 Phase, 50-400 Hz
251X = 120/208 VAC, 3 Phase, 4 Wire, 50-400 Hz
252X = 115 VAC, 3 Phase, 3 Wire, 50-400 Hz
253X* = 230 VAC, 3 Phase, 3 Wire, 50-400 Hz
254X* = 380 VAC, 3 Phase, 3 Wire, 50-400 Hz
255X*= 460 VAC, 3 Phase, 3 Wire, 50-400 Hz
256X* = 575 VAC, 3 Phase, 3 Wire, 50-400 Hz

Mounting

Blank = Stud
X = Flange

* Enclosure height is 3.835"

Consult factory for additional models.

Catalog 5-1773450-5
Revised 3-13

www.te.com

Dimensions are shown for reference purposes only. Specifications subject to change.

Dimensions are in millimeters unless otherwise specified.

USA: +1 800 522 6752
Asia Pacific: +86 0 400 820 6015
UK: +44 800 267 666

For additional support numbers please visit www.te.com

D100X Series, Close Differential

Product Facts

- **ANSI/IEEE C37.90-1978**
- **UL File No. E58048**
- **CSA File No. LR61158**

Close Differential Relays are voltage sensitive. The pick-up and drop-out voltage settings are independently adjustable, which allows precise setting of the differential voltage. This relay is available in a wide range of AC and DC voltages. Their primary application is the sensing and control of transfer switches.

Operation

Monitors a single phase AC signal, and is used for undervoltage detection. Has separate pick-up and drop-out voltage settings, providing an adjustable hysteresis.

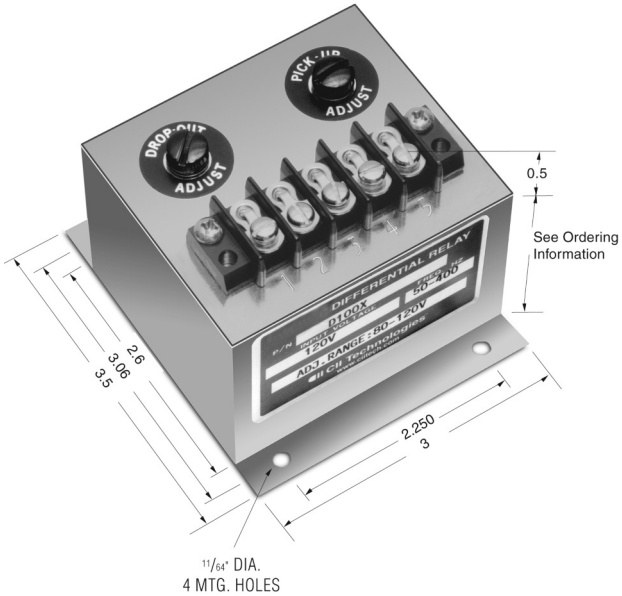

Note: Dimensions in inches. Multiply values by 25.4 for dimensions in mm.

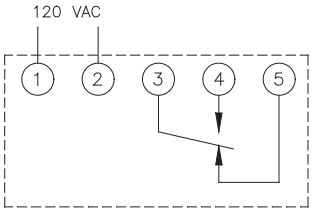

Product Specifications

Nominal Voltage — AC, Single Phase, see Ordering Information

Nominal Frequency — 50 to 400 Hz.

Pick-Up Adjustment Range — 67-100% of nominal voltage

Drop-Out Adjustment Range — 67-100% of nominal voltage

Maximum Differential Setting — 33% of nominal voltage

Minimum Differential Setting — 2% of nominal voltage

Output Contacts — Form C (SPDT)

Contact Ratings — 5 Amp resistive at 120 VAC or 28 VDC

Operating Temperature Range — -20˚C to +85˚C

Expected Life — 10 million operations

Inverse Time Drop-Out — The differential relay contains a time delay before operation so that momentary voltage transients do not affect the operation of the relay. The time delay has an inverse time characteristic so that excessive voltage conditions will cause a more rapid drop-out. This time delay is approximately 200mSec. (12 cycles) at the trip settings and decreases to 30 mSec. at approximately 15% beyond the trip settings.

Notes:

1. Remove black nylon protective screws to gain access to the two internal adjustment potentiometers.
2. Clockwise rotation of the pick-up and drop-out adjustment will raise the voltage trip point.
3. The relay contacts are shown in the de-energized state.

Ordering Information

Sample Part Number ▶ **D100X**

Model: L-L Volts	Height
D100X = 120 VAC	2"
D100-6X = 120 VAC, Spike Suppression	2"
D100-3X = 208 VAC	3.125"
D100-4X = 240 VAC	3.125"
D100-8X = 277 VAC	3.125"
D100-5X = 480 VAC	3.125"
D100-7X = 510 VAC	3.125"

Surge Withstand Capability is in compliance with the requirements of ANSI/IEEE C37.90B

Consult factory for additional models.

Catalog 5-1773450-5
Revised 3-13

www.te.com

Dimensions are shown for reference purposes only. Specifications subject to change.

Dimensions are in millimeters unless otherwise specified.

USA: +1 800 522 6752
Asia Pacific: +86 0 400 820 6015
UK: +44 800 267 666

For additional support numbers please visit www.te.com

D101X Series, 3 Phase Adjustable, Close Differential

Product Facts

- **ANSI/IEEE C37.90-1978**
- **UL File No. E58048**
- **CSA File No. LR61158**

Close Differential Relays are voltage sensitive. The pick-up and drop-out voltage settings are independently adjustable, which allows precise setting of the differential voltage. This relay is available in a wide range of AC voltages. Their primary application is the sensing and control of transfer switches.

Operation

The output contacts will close when the voltage of all three phases is above the pre-set pick-up point, and will open when any one phase drops below its drop-out setting.

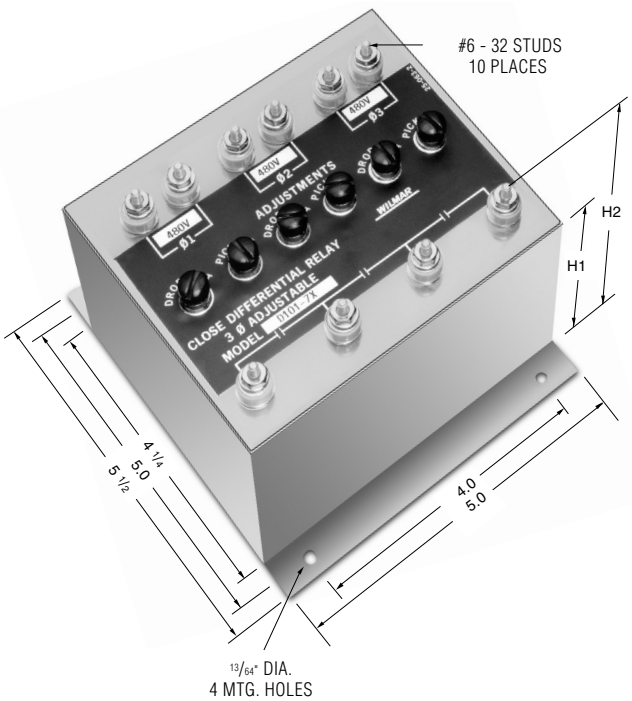

Note: Dimensions in inches. Multiply values by 25.4 for dimensions in mm.

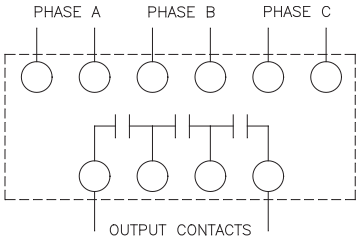

Product Specifications

Nominal Voltage — AC, Three Phase, see Ordering Information

Nominal Frequency — 50 to 500 Hz.

Pick-Up Adjustment Range — 66-100% of nominal voltage, screw-driver adjustable

Drop-Out Adjustment Range — 66-100% of nominal voltage, screw-driver adjustable

Output Contacts — SPNO

Contact Ratings — 5 amp resistive at 120 VAC or 28 VDC

Operating Temperature Range — -20˚C to +85˚C

Notes:
1. Remove screws for access to pick-up and drop-out trip adjustments.
2. Clockwise rotation of the pick-up and drop-out adjustment will raise the voltage trip point.

Ordering Information

Sample Part Number ▶ **D101X**

Model: L-L Volts
- D101X = 120 VAC
- D101-6X = 208 VAC
- D101-4X = 240 VAC
- D101-10X = 380 VAC
- D101-7X = 480 VAC

Model	Power Consumption Each Phase	H1 (inches)	H2 (inches)
D101X	2 VA max.	2	2 11/16
D101-4X	3 VA max.	3 1/2	4 3/16
D101-6X	3 VA max.	3 1/2	4 3/16
D101-7X	4 VA max.	3 1/2	4 3/16
D101-10X	4 VA max.	3 1/2	4 3/16

Consult factory for additional models.

Catalog 5-1773450-5
Revised 3-13

www.te.com

Dimensions are shown for reference purposes only. Specifications subject to change.

Dimensions are in millimeters unless otherwise specified.

USA: +1 800 522 6752
Asia Pacific: +86 0 400 820 6015
UK: +44 800 267 666

For additional support numbers please visit www.te.com

700 Series w/ Adjustable Time Delay

Product Facts

- **Function 32**
- **ANSI/IEEE C37.90-1978**
- **UL File No. E58048**
- **CSA File No. LR61158**

Several types of Reverse Power Relays are available including relays sensitive to reverse reactive power (kVAR). KILOVAC is the leading brand of reverse power relays. Our rugged sealed construction provides continuous and reliable operation unaffected by shock, vibration or other severe environments. Reverse Power Relays are used for the protection of generator sets operating in parallel.

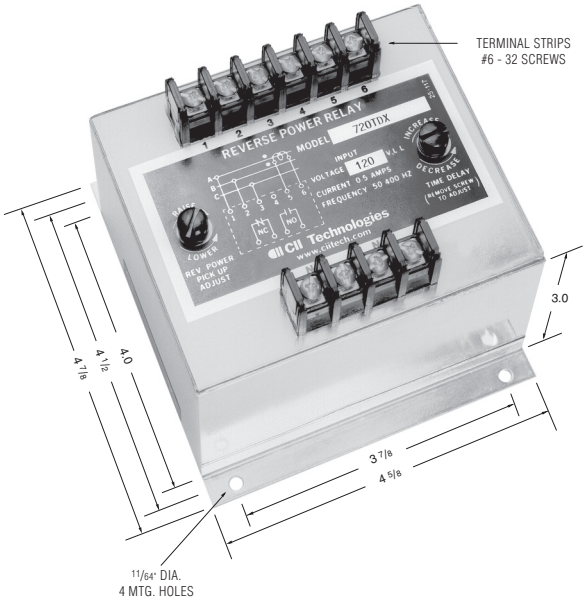

Note: Dimensions in inches. Multiply values by 25.4 for dimensions in mm.

Model 710TD

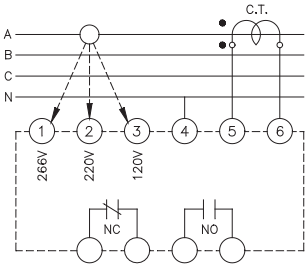

Designed for 120, 220 or 266 volt line to neutral connection

Model 720TD (X) thru 724TD (X)

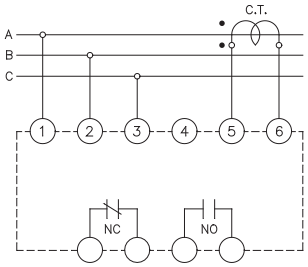

For operation on three phase, three wire

Product Specifications

Line Voltage —
Model 710TD — 120 V, 220 V or 266 V, line to neutral
Model 730TD — 120 V, 230 V, 380 V, 460 V, L-L, 3 Phase or 120 V, Single Phase, L-N
All models for three phase, three wire sensing are available, see Ordering Information

Line Frequency — 50-500 Hz.

Current Requirements —
0 to 5 amp max direct or from CT with 5 amp secondary

Trip Adjustment —
Screwdriver adjustable 4% to 20% (of the 5 amp rating)

Time Delay Adjustment — 0.5 to 20 seconds, screwdriver adjustable

Output Contacts — One set N.O., one set N.C.

Contact Ratings — 5 amp resistive at 120 AC or 28 Vdc

Power Consumption —
Voltage circuit — 2 VA max.
Current circuit — 4 VA max.

Weight — 2.75 lbs. max.

Notes:
1. Remove screw for access to the pick-up and time delay adjustments.
2. Clockwise rotation of the pick-up adjustment will raise the reverse trip point.
3. Clockwise rotation of the time adjustment will increase the time delay.
4. Polarity of the voltage and the current connections must be observed for true power sensing.
5. Interchanging connections on terminals 5 and 6, will cause the output contacts to pick-up on forward power and dropout on no power or reverse power.

Ordering Information

Sample Part Number ▶ **720TDX**

Type:
710TD = 120V, 220V, 266V line to neutral
720TD = 120V, L-L, 3 Phase
721TD = 230V, L-L, 3 Phase
722TD = 380V, L-L, 3 Phase
723TD = 460V, L-L, 3 Phase
724TD = 575V, L-L, 3 Phase
725TD = 416V, L-L, 3 Phase
730TD = 120 V, 230 V, 380 V, 460 V, L-L, 3 Phase or 120 V, Single Phase, L-N

Mounting:
X = Flange
Blank - Stud

Options:
7 = Reverse Inductive, 60 Hz

Consult factory for additional models.

Catalog 5-1773450-5
Revised 3-13

www.te.com

Dimensions are shown for reference purposes only. Specifications subject to change.

Dimensions are in millimeters unless otherwise specified.

USA: +1 800 522 6752
Asia Pacific: +86 0 400 820 6015
UK: +44 800 267 666

For additional support numbers please visit www.te.com

1000 Series

Product Facts

- **Function 47**
- **ANSI/IEEE C37.90-1978**
- **UL File No. E58048**
- **CSA File No. LR61158**

Phase failure relays protect motors, equipment and personnel from damage or injury caused by open phase, reversed phase sequence, or low voltage in a three phase system. Models are available for 50 and 60 Hz with voltages up to 575 volts. Motor control switchboards are a common application.

Operation

The contacts of the relay will close only when it senses normal conditions of three phase power at the proper phase sequence.

The relay contacts will remain in their normally open position (de-energized) when voltage with incorrect phase sequence is applied, one or more phases are open, or at undervoltage condition.

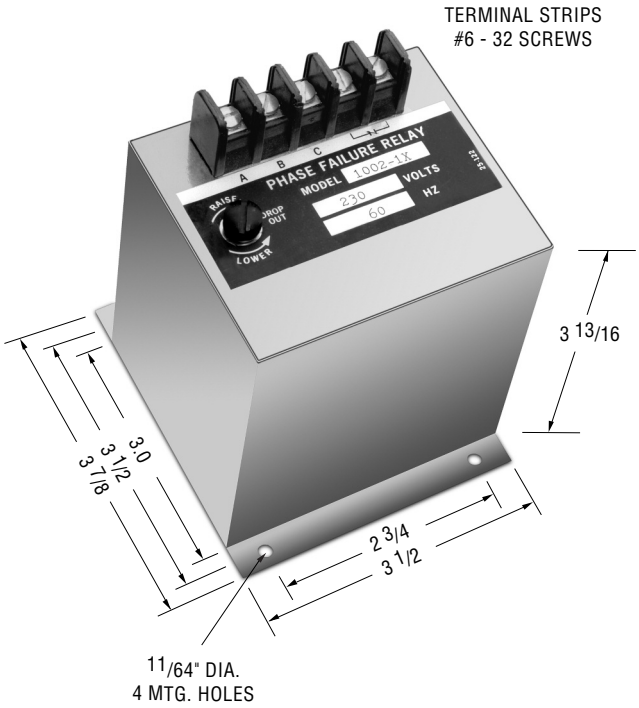

Note: Dimensions in inches. Multiply values by 25.4 for dimensions in mm.

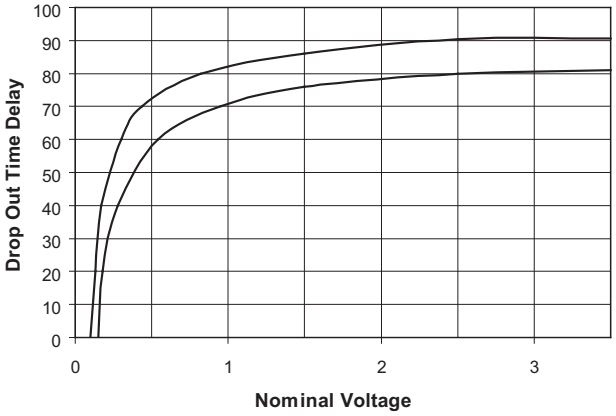

Product Specifications

Nominal Voltage — See Ordering Information

Voltage Drop-Out — 75% to 100% of nominal, screwdriver adjustable

Pick-Up to Drop-Out Differential — 3% approx.

Ambient Operating Temperature — -40°C to +70°C

Temperature Drift — ± 1%

Time Delay — See Curve

Output Contacts — One set, normally open

Contact Ratings —
10 amp at 28 VDC resistive
10 amp at 230 VAC resistive

Notes:
1. Remove screw for access to the undervoltage adjustment.
2. Clockwise rotation of the adjustment potentiometer will raise the drop-out voltage.

Ordering Information

Sample Part Number ▶ **1004X**

Type:
1001 = 120 V, 60 Hz, 3 phase,L-L
1007 = 208 V, 60 Hz, 3 phase, L-L
1002 = 230 V, 60 Hz, 3 phase,L-L
1012 = 300 V, 60 Hz, 3 phase, L-L
1013 = 350 V, 60 Hz, 3 phase, L-L
1003 = 380 V, 50 Hz, 3 phase, L-L
1004 = 460 V, 60 Hz, 3 phase,L-L
1005 = 525 V, 60 Hz, 3 phase,L-L
1006 = 575 V, 60 Hz, 3 Phase, L-L

Mounting:
X = Flange
Blank - Stud

Consult factory for additional models.

Catalog 5-1773450-5
Revised 3-13

www.te.com

Dimensions are shown for reference purposes only. Specifications subject to change.

Dimensions are in millimeters unless otherwise specified.

USA: +1 800 522 6752
Asia Pacific: +86 0 400 820 6015
UK: +44 800 267 666

For additional support numbers please visit www.te.com

900 Series

Product Facts

■ **Function 47**

Phase sequence relays are designed to monitor the correct phase rotation of a three phase system. Several models are available from 50 Hz, 60 Hz, and 400 Hz with voltages up to 575 volts. High shock relay output and reverse contacts are also available.

Operation

The relay remains de-energized when voltage in the proper phase sequence (A, B, C) is applied, the relay is energized when voltage with incorrect sequence (A, C, B) is applied.

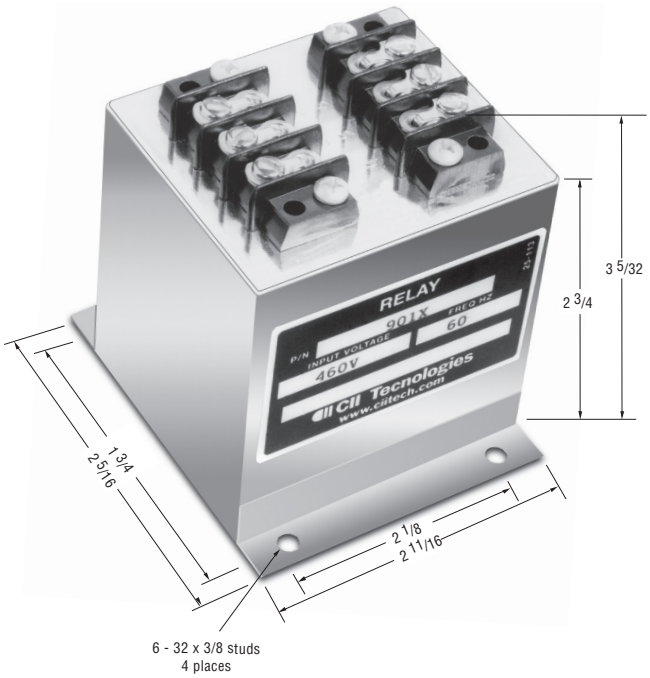

Note: Dimensions in inches. Multiply values by 25.4 for dimensions in mm.

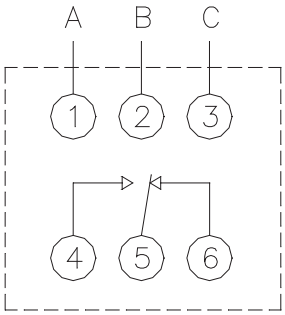

Product Specifications

Input Voltage — See Ordering Information

Output Contacts — SPDT

Contact Ratings — 5 amp resistive at 120 Vac or 28 Vdc

Ordering Information

Sample Part Number ▶ **901X**

Type:
- 900-3X = 120 VAC, 60 Hz, 3 phase,L-L
- 910X = 190-520 VAC, 60 Hz, 3 Phase, L-L
- 900-2X = 208-230, 50/60 Hz, 3 Phase
- 900X = 230 VAC, 60 Hz, 3 phase, L-L
- 901X = 460 VAC, 60 Hz, 3 phase,L-L

Mounting:
- X = Flange
- Blank - Stud

Consult factory for additional models.

Catalog 5-1773450-5
Revised 3-13

www.te.com

Dimensions are shown for reference purposes only. Specifications subject to change.

Dimensions are in millimeters unless otherwise specified.

USA: +1 800 522 6752
Asia Pacific: +86 0 400 820 6015
UK: +44 800 267 666

For additional support numbers please visit www.te.com

WCB Series

Product Facts

- **Function 60 or 87**
- **ANSI/IEEE C37.90-1978**
- **UL File No. E58048**
- **CSA File No. LR61158**

Current Balance Relays are designed to sense unbalanced current flow in a three phase system. The primary application of Current Balance Relays is to protect three phase motors against phase unbalance or phase failure.

Operation
With control voltage applied to the relay, the output contacts will energize when the three phase currents are balanced (including zero currents), and will be de-energize by unbalance currents.

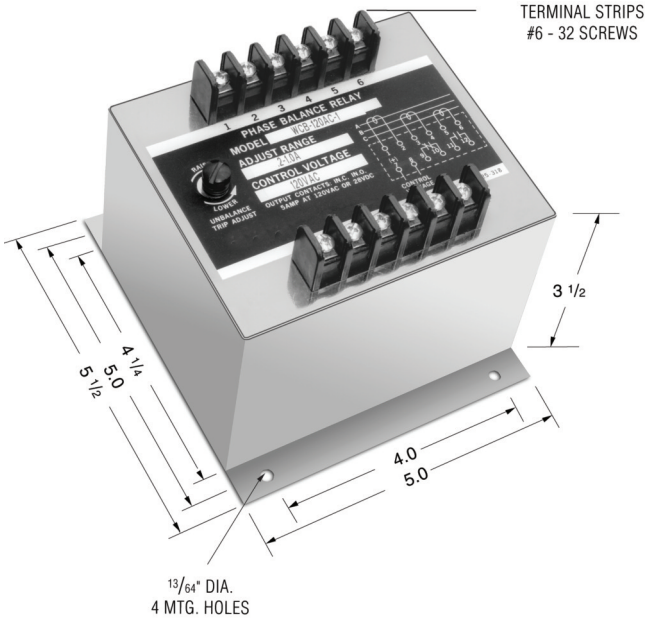

Note: Dimensions in inches. Multiply values by 25.4 for dimensions in mm.

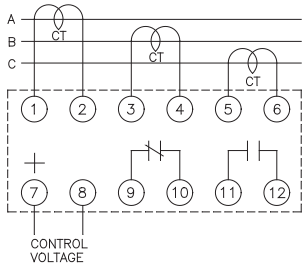

Product Specifications

Line Current — Three Phase, AC current, 50-400 Hz Direct or from CT.
5 amp continuously
20 amp, 30 sec.
200 amp, 0.10 sec.

Control Voltage — See Ordering Information

Unbalanced Trip Point — Screwdriver adjustable. Adjustment range in accordance with ordering information. (The unbalanced value is defined as the difference between the highest and the lowest phase current).

Drop-Out Time Delay — 0.9 to 1.3 seconds

Surge Withstand Capability — In compliance with C37.90B ANSI/IEEE

Operating Temperature — -40°C to +70°C

Burden —
Current input — 5.0 VA,
Phase Control voltage — 3.0 VA

Contact Ratings —
One set, N.O., One set N.C.
5 amp resistive at 120 VAC or 28 VDC

Notes:
1. Remove black screw for access to the trip adjustment.
2. Clockwise rotation of the adjustment potentiometer will raise the unbalance trip point.
3. The output contacts are shown de-energized.

Ordering Information

Sample Part Number ▶ **WCB -120AC -1 -A**

Type:
WCB = Current Balance

Control Voltage (± 15%)
26 DC
48 DC
125 AC
120 AC
230 AC
380 AC
460 AC

Trip Adjustment Range
.5 = 0.1 amp to 0.5 amps
1 = 0.2 amp to 1 amp
2 = 0.4 amp to 2 amp

Options:
A = two normally open contacts
B = two normally closed contacts

Dimensions are shown for reference purposes only. Specifications subject to change.

Dimensions are in millimeters unless otherwise specified.

USA: +1 800 522 6752
Asia Pacific: +86 0 400 820 6015
UK: +44 800 267 666

For additional support numbers please visit www.te.com

WC1 & WCT1 Series, Overcurrent

Product Facts

- **Function 50/51**
- **ANSI/IEEE C37.90-1978**
- **UL File No. E58048**
- **CSA File No. LR61158**

Current sensitive relays are available for single and three phase applications. Voltage controlled overcurrent relays protect generators against fault currents below the full rated value, when the fault produces a voltage drop as in the case of short circuits or grounds. Phase balance relays are available to sense and control unbalanced current flow in three phase systems. Current differential relays operate when the differential between two currents exceeds preset values. Over/under current phase-band relays are also available.

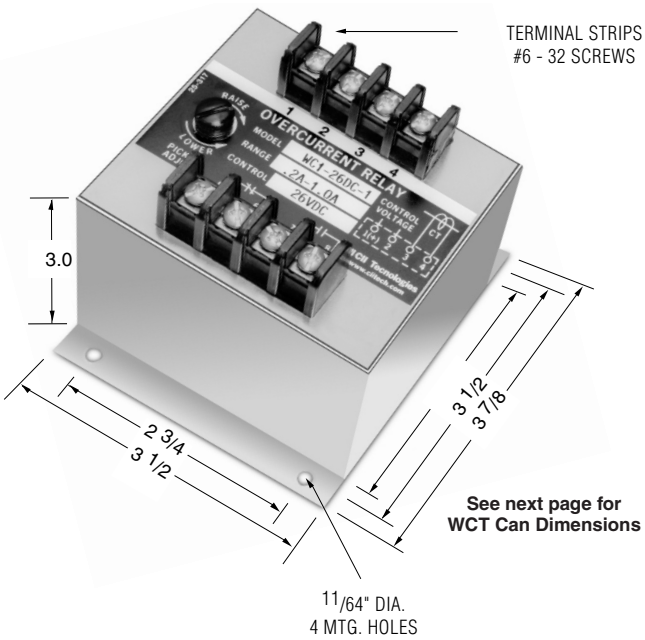

Note: Dimensions in inches. Multiply values by 25.4 for dimensions in mm.

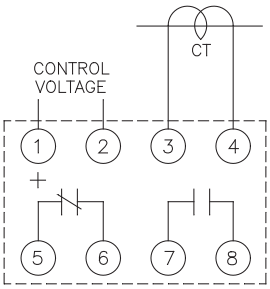

Time Delay

Standard Time Delay (WC1 Series) — A fixed inverse time delay is incorporated in all overcurrent relays and is represented by the typical curves shown.

Adjustable Time Delay (WCT1 Series) — The time delay is field adjustable. The standard time delay can be increased by any value between 0.5 and 20 seconds.

Product Specifications

Line Current — Single Phase, AC current, 50-400 Hz Direct or from CT

Control Voltage — See Ordering Information

Trip Point — Screwdriver adjustable. Adjustment range in accordance with ordering information.

Pick-Up to Drop-Out Differential — Approximately 0.1 amp.

Overcurrent Allowance — Maximum of 500% for 0.25 seconds

Surge Withstand Capability — In compliance with C37.90B ANSI/IEEE

Operating Temperature — -40°C to +70°C

Temperature Drift — ± .05%

Burden —
Current input — 1.2 VA,
Control voltage — 2.5 VA

Contact Ratings —
One set, N.O., One set N.C.
5 amp resistive at 120 VAC or 28 VDC

Notes:
1. Remove black screws for access to the current pick-up and the time delay adjustment.
2. Clockwise rotation of the pick-up adjustment will raise the current trip point.
3. Clockwise rotation of the time delay adjustment, (Type WCT1 only) will increase the time delay.

Ordering Information

Sample Part Number ▶ **WCT1 -48DC -5 -B**

Type:
WC1 = Per Time Curves
WCT1 = Adjustable Time Delay

Control Voltage (± 15%)
26 DC
48 DC
125 AC
120 AC
230 AC
380 AC
460 AC

Trip Adjustment Range
1 = .2 amp - 1 amp
5 = 1 amp to 5 amp
10 = 2 amp to 10 amp

Other Options
A = Two normally open contacts
B = Two normally closed contacts

Typical Curves (WC1 Series)

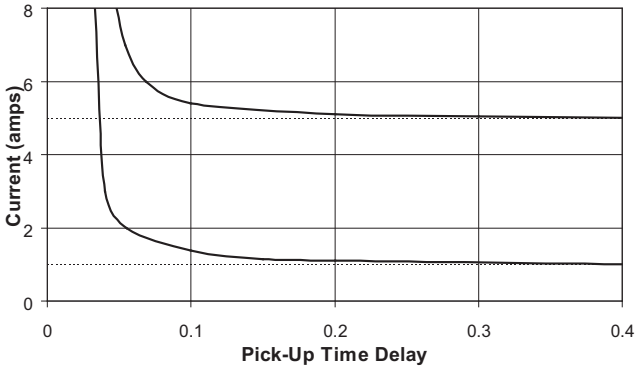

See next page for 3-phase types and consult factory for additional models.

Catalog 5-1773450-5
Revised 3-13

www.te.com

Dimensions are shown for reference purposes only. Specifications subject to change.

Dimensions are in millimeters unless otherwise specified.

USA: +1 800 522 6752
Asia Pacific: +86 0 400 820 6015
UK: +44 800 267 666

For additional support numbers please visit www.te.com

WC3 & WCT3 Series, Overcurrent

Product Facts

- **Function 50/51**
- **ANSI/IEEE C37.90-1978**
- **UL File No. E58048**
- **CSA File No. LR61158**

Current sensitive relays are available for single and three phase applications. Voltage controlled overcurrent relays protect generators against fault currents below the full rated value, when the fault produces a voltage drop as in the case of short circuits or grounds. Phase balance relays are available to sense and control unbalanced current flow in three phase systems. Current differential relays operate when the differential between two currents exceeds preset values. Over/under current phase-band relays are also available.

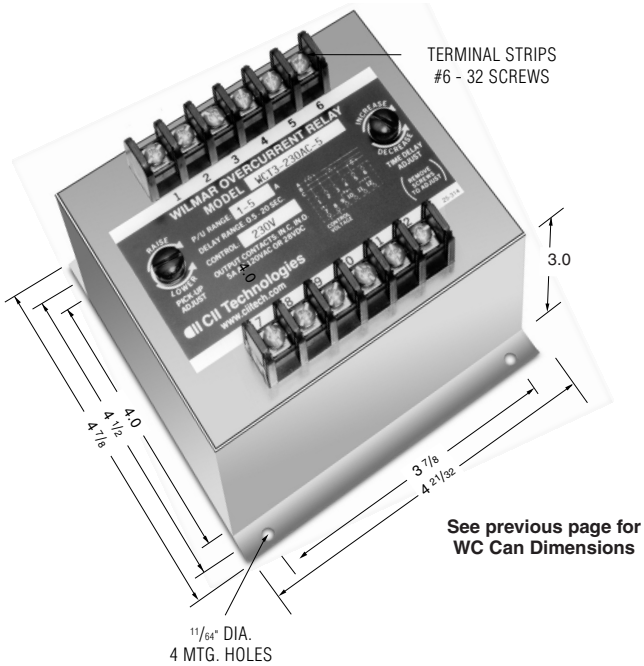

See previous page for WC Can Dimensions

Note: Dimensions in inches. Multiply values by 25.4 for dimensions in mm.

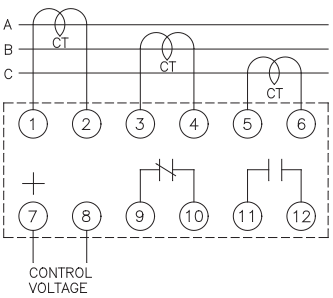

Time Delay

Standard Time Delay (WC3 Series) — A fixed inverse time delay is incorporated in all overcurrent relays and is represented by the typical curves shown.

Adjustable Time Delay (WCT3 Series) — The time delay is field adjustable. The standard time delay can be increased by any value between 0.5 and 20 seconds.

Product Specifications

Line Current — Three Phase, AC current, 50-400 Hz Direct or from CT

Control Voltage — See Ordering Information

Trip Point — Screwdriver adjustable. Adjustment range in accordance with ordering information.

Pick-Up to Drop-Out Differential — Approximately 0.1 amp

Overcurrent Allowance — Maximum of 500% for 0.25 seconds

Surge Withstand Capability — In compliance with the requirements of ANSI/IEEE

Operating Temperature — -40°C to +70°C

Temperature Drift — ± 0.05%/°C

Burden —
Current input — 1.2 VA,
Control voltage — 2.5 VA

Contact Ratings —
One set, N.O., One set N.C.
5 amp resistive at 120 VAC or 28VDC

Notes:
1. Remove black screws for access to the current pick-up and the time delay adjustment.
2. Clockwise rotation of the pick-up adjustment will raise the current trip point.
3. Clockwise rotation of the time delay adjustment, (Type WCT3 only) will increase the time delay.

Ordering Information

Sample Part Number ▶ **WCT3 -48DC -5 A**

Type:
WC3 = Per Time Curves
WCT3 = Adjustable Time Delay

Control Voltage (± 15%)
26 DC
48 DC
125 DC
120 AC
230 AC
380 AC
460 AC

Trip Adjustment Range
1 = .2 amp - 1 amp
5 = 1 amp to 5 amp
10 = 2 amp to 10 amp

Other Options
A = Two normally open contacts
B = Two normally closed contacts

Typical Curves (WC3 Series)

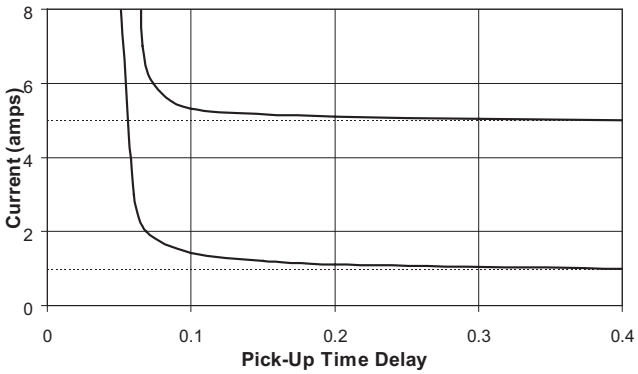

See previous page for 1-phase models and consult factory for additional models.

Catalog 5-1773450-5
Revised 3-13

www.te.com

Dimensions are shown for reference purposes only. Specifications subject to change.

Dimensions are in millimeters unless otherwise specified.

USA: +1 800 522 6752
Asia Pacific: +86 0 400 820 6015
UK: +44 800 267 666

For additional support numbers please visit www.te.com

WCD Series

Product Facts

- **Function 87**
- **ANSI/IEEE C37.90-1978**

Current Differential Relays are used for the protection of transformers, motors and generators, by comparing the magnitude of the current entering and leaving the protected circuit. On a given phase winding, any difference between the two currents will indicate an internal fault; the relay will sense the vectorial difference between the two currents of the protected section and will initiate a quick disconnection of the unit, to prevent disastrous consequences.

The relay may also be used to protect internal faults on transformers, such as: ground faults, shorted winding, leakage between primary and secondary, etc. It will sense and compare primary vs. secondary currents, once the turns ratio has been taken into consideration.

Operation

With control voltage applied, the output contacts (shown in the de-energized position) will remain de-energized as long as the difference between the two input currents remains below the preset trip value. The contact will transfer to the energized position when the current difference exceeds the trip value.

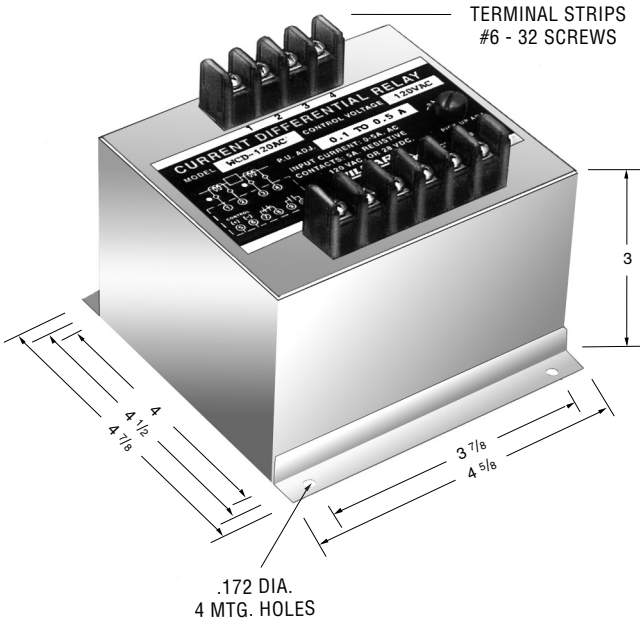

Note: Dimensions in inches. Multiply values by 25.4 for dimensions in mm.

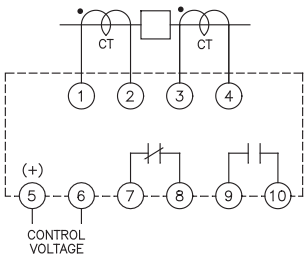

Ordering Information

Sample Part Number ▶ **WCD -230AC -1 -A**

Type:
WCD - Close Differential

Control Voltage

120AC	25DC
208AC	48DC
230AC	125DC
380AC	
416AC	
460AC	
525AC	
575AC	

Trip Adjustment Range
.5 = 0.1 amp to 0.5 amp
1 = 0.2 amp to 1 amp
2 = 0.4 amp to 2 amp

Options:
A = Two normally open contacts
B = Two normally closed contacts
H = Contacts rated 3 amp at 125 VDC
P = Transient protection is provided in compliance with ANSI/IEEE C37.90-1978

Product Specifications

Line Current —
Single Phase, AC current, 50-400 Hz
Direct or from CT
5 amp continuously
20 amp 30 seconds
200 amp, 0.10 seconds

Control Voltage — See Ordering Information

Differential Trip Point —
Screwdriver adjustable. See Ordering Information

Operating Temperature —
-40°C to +75°C

Burden —
Current input — 2.5 VA max.
Control voltage DC — 2 W max.
AC — 2 VA max.

Output Contacts —
One set, N.O., One set N.C.

Contact Ratings —
5 amp resistive at 120 VAC or 28 VDC

Notes:
1. Remove black screws for access to the trip adjustments.
2. Clockwise rotation of the adjustment potentiometer will raise the current differential trip point.
3. The output contacts are shown de-energized.

Consult factory for additional models.

Catalog 5-1773450-5
Revised 3-13

www.te.com

Dimensions are shown for reference purposes only. Specifications subject to change.

Dimensions are in millimeters unless otherwise specified.

USA: +1 800 522 6752
Asia Pacific: +86 0 400 820 6015
UK: +44 800 267 666

For additional support numbers please visit www.te.com

1800 Series

Product Facts

- **Function 25**
- **ANSI/IEEE C37.90-1978**
- **UL File No. E58048**
- **CSA File No. LR61158**

Application

These relays are designed for automatic paralleling (synchronizing) of generators. The relays sense the phase angle displacement and the amplitude difference between two voltages and permit paralleling only when both voltages are equal and in phase. A short time delay is provided to assure that the frequencies are essentially the same at the moment of paralleling. The basic series is designed to parallel two or more energized AC generators. The "Dead Bus" type provides paralleling of AC generators to the main bus. They permit electrical connection of an energized generator to an un-energized line (Dead Bus). If the bus is energized, connection of the generator to the bus is permitted only when both are synchronized.

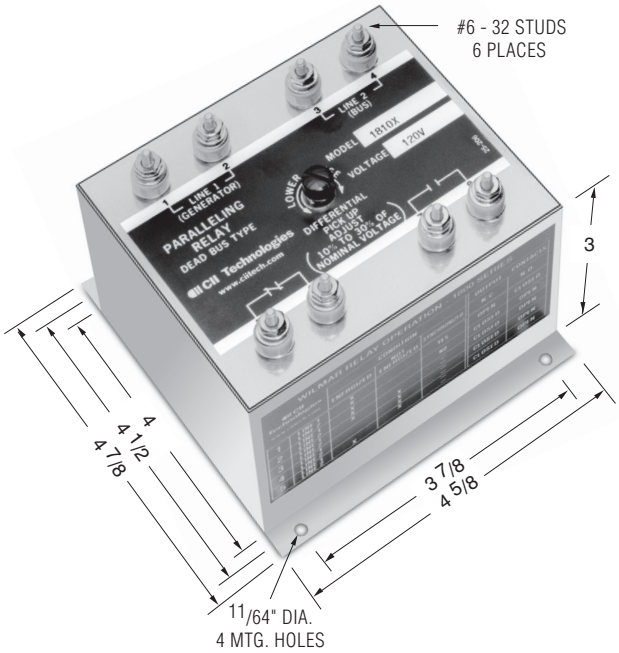

Note: Dimensions in inches. Multiply values by 25.4 for dimensions in mm.

Product Specifications

Sensing Voltage — 120 V, 230 V, 277 V, 380 V, 460 V, 575 V, & 415 V

Line Frequency — 50-500 Hz

Pick-Up Adjustment — External adjustment for field sensing of 10-30% of nominal input voltage. (Vertical voltage differential of 6 to 18 electrical degrees).

Time Delay — Fixed @ 60 milliseconds is provided to assure that the frequencies of both input lines are sufficiently close to permit paralleling within the preset window.

Output Contacts — One set N.O., one set N.C. 5 amp resistive at 120 VAC or 28 VDC

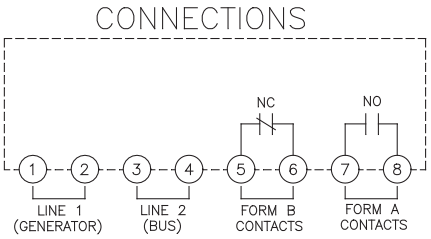

A. 3 Phase, 4 Wire System
Connect phase "A" of LINE 1 to terminal 1
Connect phase "A" of LINE 2 to terminal 3
Connect the neutrals to terminals 2 & 4

B. 3 Phase, 3 Wire or 1 Phase, 2 Wire System
Connect phase "A" of LINE 1 to terminal 1
Connect phase "B" of LINE 1 to terminal 2
Connect phase "A" of LINE 2 to terminal 3
Connect phase "B" of LINE 2 to terminal 4

Selection Guide (Typical Applications)

Sensing Voltage	Series 1800* Generator to Generator	Series 1800DB** Generator to Bus	Series 1800DDB*** Bus to Bus
120 Volts	1810X	1810DBX	1810DDBX
230 Volts	1820X	1820DBX	1820DDBX
380 Volts	1830X	1830DBX	1830DDBX
460 Volts	1840X	1840DBX	1840DDBX
575 Volts	1850X	1850DBX	1850DDBX
415 Volts	1860X	1860DBX	1860DDBX
277 Volts	1870X	1870DBX	1870DDBX

		Condition			Series 1800 Contacts		Series 1800DB Contacts		Series 1800DDB Contacts	
		Energized	Not Energized	Synch.	N.C.	N.O.	N.C.	N.O.	N.C.	N.O.
1	Line 1	X			Open	Close	Open	Close	Open	Close
	Line 2	X		Yes						
2	Line 1	X		No	Close	Open	Close	Open	Close	Open
	Line 2	X		No						
3	Line 1	X			Close	Open	Open	Close	Open	Close
	Line 2		X							
4	Line 1		X		Close	Open	Close	Open	Close	Open
	Line 2		X							
5	Line 1		X		Close	Open	Close	Open	Open	Close
	Line 2	X								

Notes

*Permits paralleling of two generators only when they are "on-line" and their voltages are equal and in phase (synchronized)

**Normally used to permit paralleling of a generator to a bus when: (a) both line voltages are equal and in phase, or: (b) when the generator is "on-line" and the bus is "dead"

***Permits paralleling of two power lines (buses) when: (a) both line voltages are equal and in phase, or: (b) when either bus is "hot" and the other bus is "dead"

Output Contact Options —

1. Two Form A. (Add -A to Model Number)
2. Two Form B. (Add -B to Model Number)

Consult factory for additional models.

Catalog 5-1773450-5
Revised 3-13

www.te.com

Dimensions are shown for reference purposes only. Specifications subject to change.

Dimensions are in millimeters unless otherwise specified.

USA: +1 800 522 6752
Asia Pacific: +86 0 400 820 6015
UK: +44 800 267 666

For additional support numbers please visit www.te.com

WOF & WUF Series

Product Facts

- **Function 81 O/U**
- **ANSI/IEEE C37.90-1978**
- **UL File No. E58048**
- **CSA File No. LR61158**

Application

The output contacts of frequency relays are energized when the frequency exceeds the adjustable set point. Overfrequency and underfrequency relays are available in 50, 60 and 400Hz. Combination over/underfrequency "band pass" relays are also available. These are energized at rated frequency and de-energized during overfrequency or underfrequency conditions. Frequency Differential relays are energized above the preset frequency. The pick-up and drop-out frequency settings are independently adjustable.

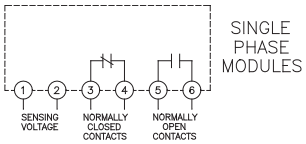

Consult factory for additional models.

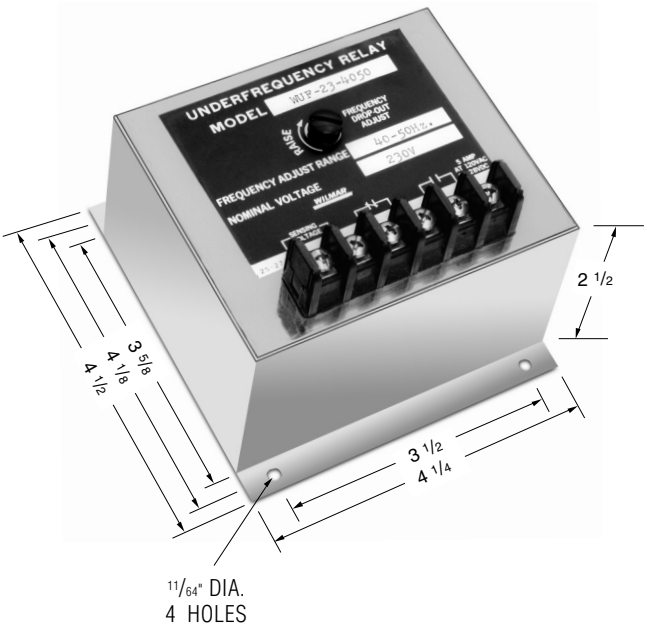

Note: Dimensions in inches. Multiply values by 25.4 for dimensions in mm.

Product Specifications

Nominal Voltage (±20%) — 120, 230, 380 and 460 volts

Nominal Frequencies — 50, 60 and 400 Hz.

Trip Point — Screwdriver adjustable. Adjustment range in accordance with ordering information.

Operating Temperature — -20°C to +65°C

Differential — The frequency pitch-up to drop-out differential is .5% max

Voltage Drift — ± .05% maximum frequency error for input voltage variation of ±10%

Time Delay — See Time versus Frequency curves

Surge Withstand Capability — In compliance with C37.90B ANSI/IEEE

Output Contacts — One set N.O., one set N.C.

Contact Ratings — 5 amp resistive at 120 VAC or 28VDC

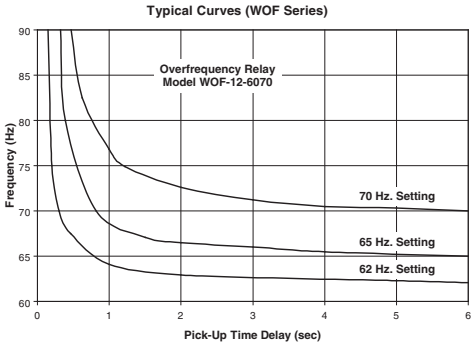

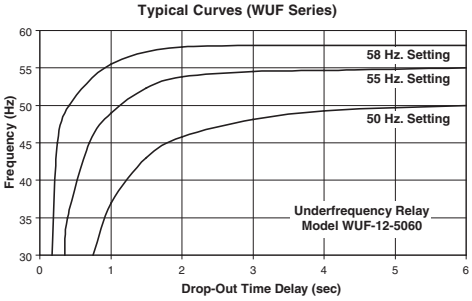

Ordering Information

Sample Part Number ▶ **WUF -12 -5060 -T**

Type:
- WUF = Underfrequency
- WOF = Overfrequency

Input Voltage (VAC)
- 12 = 120
- 23 = 230
- 38 = 380
- 46 = 460

Frequency Range
- 4050 = 40-50 HZ
- 5060 = 50-60 HZ
- 6070 = 60-70 HZ
- 3540 = 350-400 HZ
- 4045 = 400-450 HZ (overfrequency only)

Time Delay Options
- blank = Per Time Curve
- T = Adjustable

Time Delay

Standard Time Delay — A minimum, fixed inverse time delay is incorporated in all frequency relays to prevent nuisance tripping and is represented by the typical curves shown above.

Adjustable Time Delay — If additional time delay is required, a suffix "T" must be added to the part number. This allows the minimum fixed time delay to be field-adjustable up to 20 seconds.

Notes:
1. Remove black screws for access to the frequency and the time adjustments.
2. Clockwise rotation of the frequency potentiometer will raise the frequency trip point.
3. Clockwise rotation of the time adjustment, option "T" will increase the time for overfrequency relays and dropout time for underfrequency relays.

Catalog 5-1773450-5
Revised 3-13

www.te.com

Dimensions are shown for reference purposes only. Specifications subject to change.

Dimensions are in millimeters unless otherwise specified.

USA: +1 800 522 6752
Asia Pacific: +86 0 400 820 6015
UK: +44 800 267 666

For additional support numbers please visit www.te.com

WOUF Series, Over/Underfrequency

Product Facts

- **Function 81 O/U**
- **ANSI/IEEE C37.90-1978**
- **UL File No. E58048**
- **CSA File No. LR61158**

The output contacts of frequency relays are energized when the frequency exceeds the adjustable set point. Overfrequency and underfrequency relays are available in 50, 60 and 400Hz. Combination over/underfrequency "band pass" relays are also available. These are energized at rated frequency and de-energized during overfrequency or underfrequency conditions. Frequency Differential relays are energized above the preset frequency. The pick-up and drop-out frequency settings are independently adjustable.

Operation

The relay will energize at normal frequency; The normally closed contacts will open and the normally open contacts will close. The relay will drop-out after time delay at overfrequency or underfrequency.

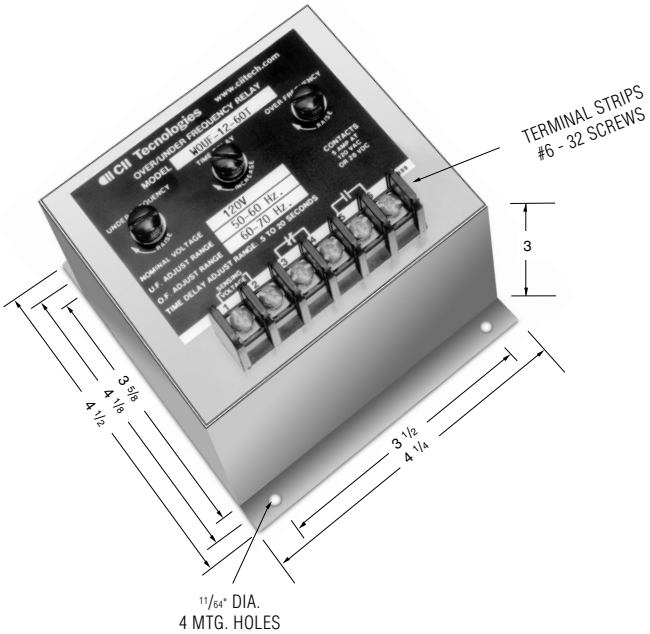

Note: Dimensions in inches. Multiply values by 25.4 for dimensions in mm.

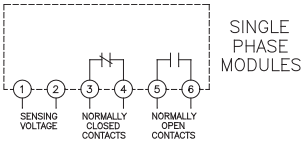

Ordering Information

Sample Part Number ▶ **WOUF -12 -5060 -T**

Type:
WOUF = Over/Underfrequency

Input Voltage (VAC)
12 = 120
23 = 230
38 = 380
46 = 460

Frequency Range

	UF Adj.	OF Adj.
50 =	40-50 Hz	50-60 Hz
60 =	50-60 Hz	60-70 Hz
400 =	350-400 Hz	400-450 Hz

Time Delay Options
blank = Per Time Curve
T = Adjustable

Consult factory for additional models.

Product Specifications

Nominal Voltage (±20%) — 120, 230, 380 and 460 volts

Nominal Frequencies — 50, 60 and 400 Hz.

Trip Point — Screwdriver adjustable. Adjustment range in accordance with ordering information.

Operating Temperature — -40°C to +65°C

Differential — The frequency pick-up to drop-out differential is .5% max

Voltage Drift — ± 0.05% maximum frequency error for input voltage variation of ±10%

Time Delay — See Time versus Frequency curves

Surge Withstand Capability — In compliance with C37-90B ANSI/IEEE

Output Contacts — One set N.O., one set N.C.

Contact Ratings — 5 amp resistive at 120 VAC or 28 VDC

Notes:
1. Remove black screws for access to the frequency and the time adjustments.
2. Clockwise rotation of the frequency potentiometer will raise the frequency trip point.
3. Clockwise rotation of the time adjustment, option "T" will increase the drop-out time delay.

Time Delay

Standard Time Delay — A minimum, fixed inverse time delay is incorporated in all frequency relays to prevent nuisance tripping and is represented by the typical curves shown below.

Adjustable Time Delay — If additional time delay is required, a suffix "T" must be added to the part number. This allows the minimum fixed time delay to be field-adjustable up to 20 seconds.

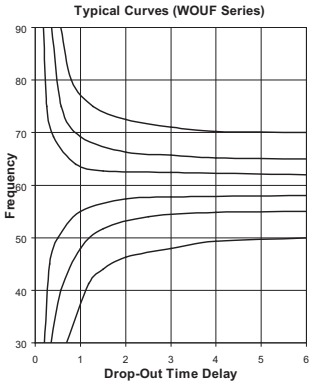

Catalog 5-1773450-5
Revised 3-13

www.te.com

Dimensions are shown for reference purposes only. Specifications subject to change.

Dimensions are in millimeters unless otherwise specified.

USA: +1 800 522 6752
Asia Pacific: +86 0 400 820 6015
UK: +44 800 267 666

For additional support numbers please visit www.te.com

20-000 Series

Product Facts

■ **Function 81 O**

The output contacts of frequency relays are energized when the frequency exceeds the adjustable set point. Overfrequency and underfrequency relays are available in 50, 60 and 400Hz. Combination over/underfrequency "band pass" relays are also available. These are energized at rated frequency and de-energized during overfrequency or underfrequency conditions. Frequency Differential relays are energized between the preset frequencies. The pick-up and drop-out frequency settings are independently adjustable.

Operation

The normally open contacts close, and the normally closed contacts open, at all frequencies above the set point. The contacts in the connection diagram, are shown in the de-energized position (below the trip set point).

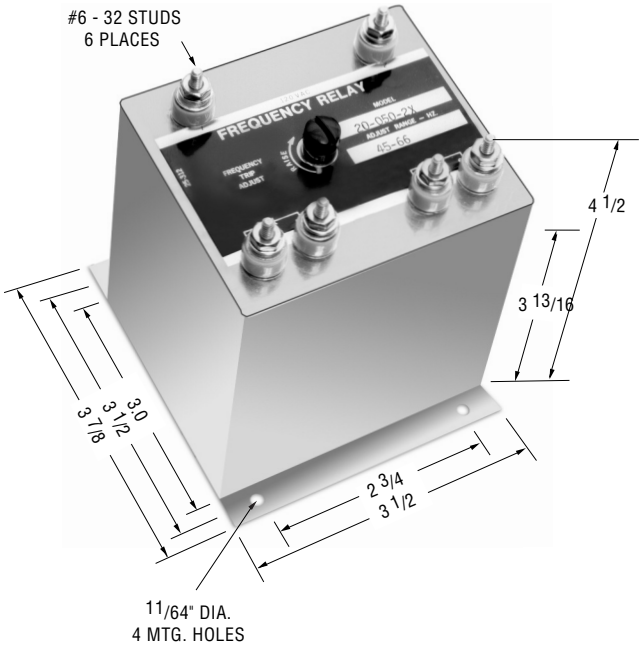

Note: Dimensions in inches. Multiply values by 25.4 for dimensions in mm.

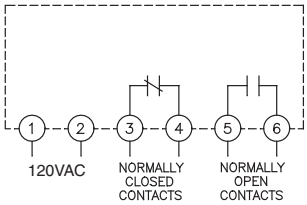

Product Specifications

Input Voltage (±10%) — 120 VAC, Single Phase

Frequencies Range (adjustable) — See Ordering Information

Differential — Frequency pick-up to drop-out differential is 1% max

Temperature Range — -40°C to +85°C

Temperature Drift — ± 1% frequency error over temperature range

Voltage Error — ± 1% for input voltage of 120 VAC ± 10%

Contact Ratings — 5 amp resistive at 120 VAC or 28 VDC

Output Contacts — One set N.O., one set N.C.

Notes:
1. Remove screw for access to trip adjustment.

Ordering Information

Sample Part Number ▶ **20 -050 X**

Type:
20 - Frequency

Frequency Range
040 = 40-50 Hz
050 = 50-60 Hz
060 = 60-70 Hz
350 = 350-500 Hz
400 = 400-450 Hz

Mounting Options
X = Flange
blank = Stud

Consult factory for additional models.

Catalog 5-1773450-5
Revised 3-13

www.te.com

Dimensions are shown for reference purposes only. Specifications subject to change.

Dimensions are in millimeters unless otherwise specified.

USA: +1 800 522 6752
Asia Pacific: +86 0 400 820 6015
UK: +44 800 267 666

For additional support numbers please visit www.te.com

25-000 Series

Product Facts

- **Function 81 O/U**
- **ANSI/IEEE C37.90-1978**

The output contacts of frequency relays are energized when the frequency exceeds the adjustable set point. Overfrequency and underfrequency relays are available in 50, 60 and 400Hz. Combination over/underfrequency "band pass" relays are also available. These are energized at rated frequency and de-energized during overfrequency or underfrequency conditions. Frequency Differential relays are energized above the preset frequency. The pick-up and drop-out frequency settings are independently adjustable.

Operation

The normally open contacts close, and the normally closed contacts open, at nominal frequency. The contacts are de-energize at underfrequency, overfrequency or no input voltage.

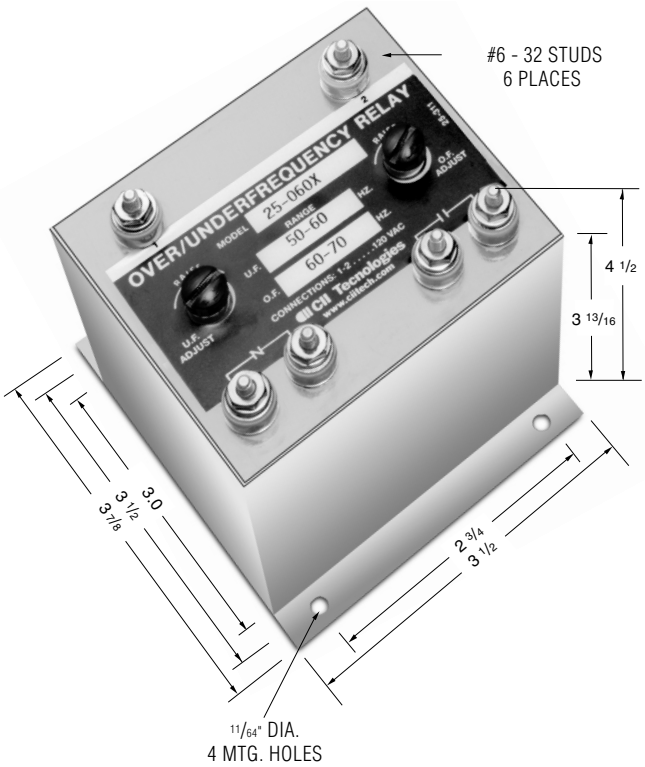

Note: Dimensions in inches. Multiply values by 25.4 for dimensions in mm.

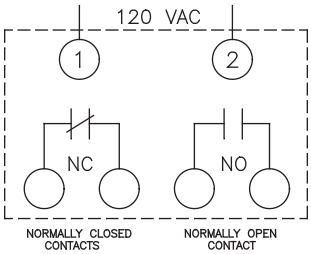

Product Specifications

Input Voltage (±10%) — 120 VAC

Frequency Range (adjustable) — See Ordering Information

Trip Points — Screwdriver adjustable

Temperature Range — -20°C to +85°C

Temperature Drift — ± 1% frequency error over temperature range

Voltage Drift — ± 1% frequency error input voltage variation of ± 10%

Contact Ratings — 5 Amp resistive at 120 VAC or 28VDC

Output Contacts — One set N.O., One set N.C.

Notes:

1. The contacts are shown in the de-energized position.
2. Remove screws for access to the underfrequency and overfrequency trip adjustments.
3. Clockwise rotation of the adjustment potentiometer will raise the frequency trip points.

Ordering Information

Sample Part Number ▶ **25 -050 X**

Type:
25 - Over/Underfrequency

Frequency Range

	Under	Over
050 =	40-50 Hz	50-60 Hz
060 =	50- 60 Hz	60-70Hz
400 =	350- 400 Hz	400-450Hz

Mounting Options
X = Flange
blank = Stud

Consult factory for additional models.

Catalog 5-1773450-5
Revised 3-13

www.te.com

Dimensions are shown for reference purposes only. Specifications subject to change.

Dimensions are in millimeters unless otherwise specified.

USA: +1 800 522 6752
Asia Pacific: +86 0 400 820 6015
UK: +44 800 267 666

For additional support numbers please visit www.te.com

20-050-19 Series (Voltage/Frequency)

Product Facts

- **Function 27/81**
- **ANSI/IEEE C37.90-1978**
- **UL file No. E58048**
- **CSA file No. LR61158**

The output contacts of frequency relays are energized when the frequency exceeds the adjustable set point. Overfrequency and underfrequency relays are available in 50, 60, and 400Hz. Combination over/underfrequency "band pass" relays are also available. These are energized at rated frequency and de-energized during overfrequency or underfrequency conditions. Frequency Differential relays are energized above the preset frequency. The pick-up and drop-out frequency settings are independently adjustable.

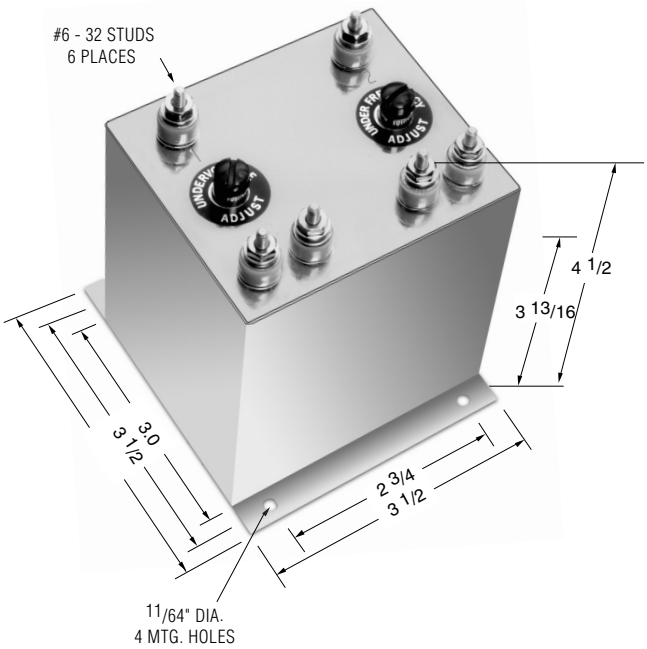

Note: Dimensions in inches. Multiply values by 25.4 for dimensions in mm.

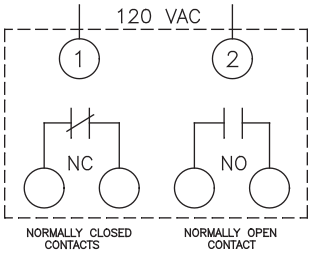

Product Specifications

Nominal Voltage (±20%) — 120 VAC, Single Phase

Nominal Frequency — 60 Hz.

Voltage Adjustment Range (PU) — 85 to 120 VAC

Frequency Adjustment Range (PU) — 45 to 60 Hz

Output Contacts — One set N.O., one set N.C.

Contact Ratings — 5 amp resistive at 120 VAC or 28 VDC

Notes:

1. Remove black screws for access to the voltage and frequency and the time adjustments.
2. Clockwise rotation of the voltage adjustment potentiometer will raise the voltage trip point.
3. Clockwise rotation of the frequency adjustment will raise the frequency time point.

Ordering Information

Sample Part Number ▶ **20-050-19X**

Type:
20-050-19 = Voltage/Frequency

Mounting Options
Blank = stud
X = Flange

Options:
P = Surge Suppression

Consult factory for additional models.

Catalog 5-1773450-5
Revised 3-13

www.te.com

Dimensions are shown for reference purposes only. Specifications subject to change.

Dimensions are in millimeters unless otherwise specified.

USA: +1 800 522 6752
Asia Pacific: +86 0 400 820 6015
UK: +44 800 267 666

For additional support numbers please visit www.te.com

WGD Series — Floating Ground

Product Facts

- **ANSI/IEEE C37.90-1978**
- **UL file No. E58048**
- **CSA file No. LR61158**

Ground Fault Detectors are used to sense leakage current to ground in power transformers and generators. They are available for both AC and DC systems. Some generator systems provide auxiliary power outlets for small equipment. TE Connectivity GFD's eliminate personnel risk of accessing these outlets if a ground fault exists. Diesel locomotives and railroad line signal boxes also use GFD's for operational control purposes. The GFD monitors both positive and negative grounds for fault currents and can trigger either notification or system shutdown if these are detected. GFD's are available for both grounded and ungrounded systems.

Operation

When the resistance between any phase to ground falls below the set point the relay will energize; The normally closed contacts will open, the normally open contacts will close.

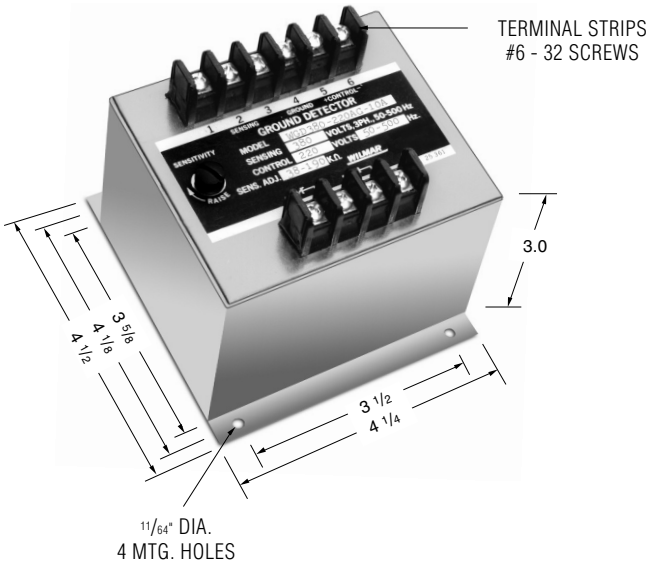

Note: Dimensions in inches. Multiply values by 25.4 for dimensions in mm.

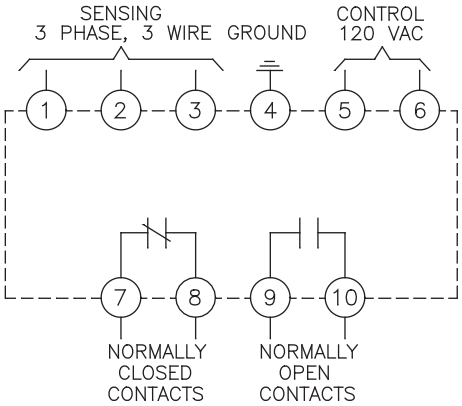

Ordering Information

Sample Part Number ▶ **WGD-**

Type:	Volts L-L	Trip Point Adj. Phase to Ground
115-120AC	115	11-55KΩ
120-120AC	120	12-60KΩ
200-120AC	200	20-100KΩ
208-120AC	208	21-105KΩ
220-120AC	220	22-110KΩ
230-120AC	230	23-115KΩ
240-120AC	240	23-115KΩ
380-120AC	380	38-190KΩ
400-120AC	400	40-200KΩ
416-120AC	416	42-210KΩ
440-120AC	440	44-220KΩ
460-120AC	460	46-230KΩ
480-120AC	480	48-240KΩ
525-120AC	525	52-260KΩ
575-120AC	575	57-285KΩ
600-120AC	600	60-300KΩ

Product Specifications

Sensing Voltage (±10%) — 3 phase, 3-wire. See Ordering Information.

Control Voltage — 120 Volts AC

Contacts Trip Points (sensitivity) — Screwdriver adjustable. See Ordering Information.

Pick-up Time Delay — 1.5 seconds approximately

Contact Ratings — 5 amp resistive at 120 VAC or 28 VDC

Operating Temperature — -40°C to +65°C

Temperature Effects — ± 1% over temperature range

Power Consumption — Sensing: —2 mA/Phase Approx., Control — 2VA at 120VAC

Surge Withstand Capability — In accordance with the requirements of ANSI/IEEE

Notes:
1. Remove screw for access to the pick-up adjustment potentiometer.
2. Clockwise rotation of the adjustment potentiometer will raise the relay sensitivity.

Catalog 5-1773450-5
Revised 3-13

www.te.com

Dimensions are shown for reference purposes only. Specifications subject to change.

Dimensions are in millimeters unless otherwise specified.

USA: +1 800 522 6752
Asia Pacific: +86 0 400 820 6015
UK: +44 800 267 666

For additional support numbers please visit www.te.com

WC1G Series — Grounded

Ground Fault Detectors are designed to provide very sensitive Ground-Current protection for motor, equipment and personnel from damage or electrical shock. In a ground system, the leakage current is monitored through a toroidal or doughnut current transformer placed around the supply conductors to a motor, transformer, equipment or outlets. Since the sums of the current in a system add to zero, the relay is responsive only to ground-fault current.

Operation

The output contacts are shown in de-energized position. They will change state when these conditions are met:

1. Control voltage is applied.
2. Leakage current exceed the trip setting.

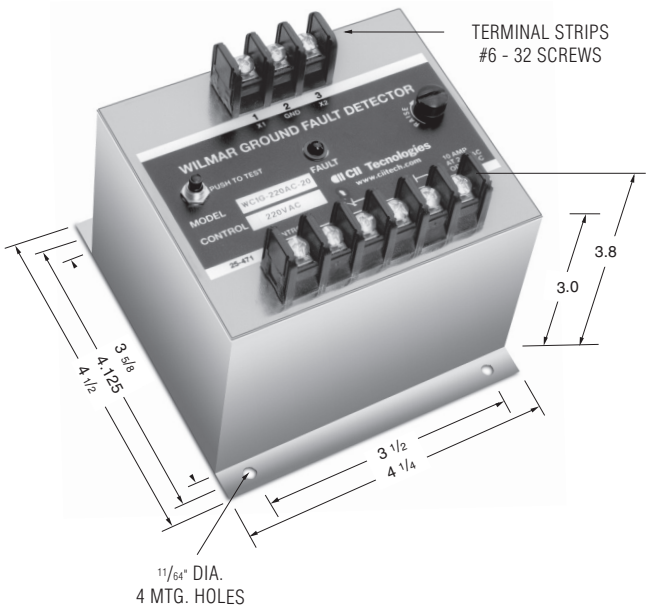

Note: Dimensions in inches. Multiply values by 25.4 for dimensions in mm.

Product Specifications

CT Window Diameter — 1.7 inches (std) or can be specified by customer

Leakage Current Range — 10 to 60 mA

Control Voltage — See Ordering Information

Output Contacts — One set N.C., one set N.O.

Operating Temperature — 40°C to +65°C

Contact Ratings — 10 amp resistive at 250 Vac, 8 amp. resistive @ 30 Vdc

Notes:
1. Remove screw for access to the pick-up adjustment potentiometer.
2. Clockwise rotation of the adjustment potentiometer will raise the relay sensitivity.

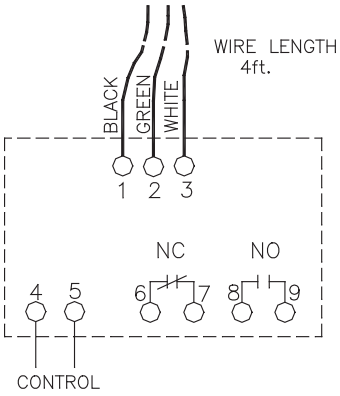

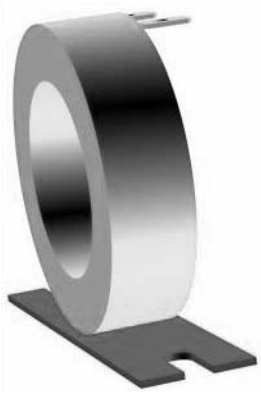

Current Transformer

Ordering Information

Sample Part Number ▶ **WC1G-120AC**

Model:
WC1G-

Control Voltage
120AC
220AC
230AC
380AC
400AC
460AC
480AC
575AC

Catalog 5-1773450-5
Revised 3-13

www.te.com

Dimensions are shown for reference purposes only. Specifications subject to change.

Dimensions are in millimeters unless otherwise specified.

USA: +1 800 522 6752
Asia Pacific: +86 0 400 820 6015
UK: +44 800 267 666

For additional support numbers please visit www.te.com

Additional Relays

OVERVOLTAGE RELAYS

AC, SINGLE PHASE, 50-400 HZ, SPECIALS

300X	120VAC
300HX	120VAC, Similar to 300X,with 125VDC 3A Contacts
300S-1X	440VAC, 370-480V Range, Navy High Shock
300-2X	120VAC, Set at 132V, .010 Sec.Time Delay
300S-2X	120VAC, Navy High Shock
300-3X	190VAC, 180-280V Range
300-4X	190VAC, P.U. 264V, D.O. 261V
300-5X	240VAC, 230-360V Range
300-5KX	240VAC, Similar to 300-5X, except 1-10KHz
300-6X	230VAC, 230-300V Range
300-7X	450VAC, 375-475V Range
300-8X	120VAC, P.U. 130V, D.O. 125V
300-9X	120VAC, P.U. 132V, D.O. 126V
300-10X	120VAC, 99-132V Range
300-10HX	120VAC, Sim. to 300-10X, 125VDC 3A Contacts
300-11X	120VAC, 0.5 Sec. Time Delay
300-12X	480VAC,480-600V Range
300-13X	120VAC, 2 N.O. Contacts
300-14X	95VAC, 95-120V Range
300-17X	120VAC, Similar to 300X with Spike Suppression
300-18X	120VAC, Differential, 2V Max.
300-20X	10VAC, 8-12V Range, 120V Transient, 120VAC Ctrl.
300-21X	120VAC, 1.5-2.0 Sec. Time Delay
300-24X	277VAC, 140-320VAC Range
300-25X	24VAC, 24-30VAC Range
300-26X	120VAC, 90-150V Range
300-27X	120VAC, 105-135VAC Range
300-28X	10VAC, 8-12VAC , 220VAC Transient, 120VAC Ctrl.
300-29X	120VAC, 150-180V Range
300-30X	120VAC, 375V Max., 24VDC Control
300-32X	120VAC, 135-180V Range, 1.5 Sec. Time Delay
300-33X	115/230VAC, DPDT Contacts 230VAC 1A
300-34X	100VAC, 1.5-2.0 Sec. T.D., 100-120V Range
300-35X	480VAC, 1.5-2.0 Sec. T.D., 480-600V Range
300-36X	138VAC, 138-172V Range
300-37X	350VAC, 350-450V Range, 2.0 Sec. T.D., Supp.
300-38X	120VAC, 99-132V Range, 125VDC 1A Contacts
300-39X	120VAC, 120-150V Range, 0.3-3.0 Adj. T.D.
300-40X	230VAC, 220-300V Range, 2.0 Sec. T.D.
300-41X	120VAC, 120-165V Range, 1.5 Sec. T.D., Supp.
300-42X	120VAC, Similar to 300-39X, but 2 N.O. Contacts
300-43X	120/240VAC, 140-180V Range, Phase Protection
300-44X	277VAC, 277-350V Range
300-45X	30/60VAC, 277V Continuous, 115VAC Control
300-46X	67VAC, 67-120V Range
300-47X	360VAC, 10-64V Range, 0.75-7.5 Sec. T.D.
300-48X	10VAC, 8-21V, 220VAC Transient, 125VDC Ctrl.
300-49X	120VAC, Similar to WOV-1-120, but 0.2 Sec. T.D.
300-50X	120/240VAC, Highest of 2, 0.5-10 Sec. T.D.
300-51X	30/60VAC, 400V Max. Contin., 120V 60Hz Ctrl.
300-52X	208VAC, 208-291V, 24VDC Ctrl., 1 N.O. Contact
300-53X	200-480VAC, 200-240V Range
300DC-1X	28VDC, Set at 30V, Curve 1 MIL-STD-704

AC, SINGLE PHASE, 400 HZ

302X	120VAC
302-SX	120VAC, A.E.I. . Special
302-1X	120VAC, 0.3 Sec. T.D.
302-2X	120VAC, 125-175V Range
302-3X	120VAC, 125-150V Range with T.D.
302-4X	120VAC, 125-150V Range, 0.3 Sec. T.D.

AC, THREE PHASE, 50-400 HZ, SPECIALS

301X	120/208VAC4W
301-SX	120/208VAC, 4W, Similar to WOV-3-208 with hi-shock
301-HX	120/208VAC, 4W, 125VDC 3A Contacts
301-1X	240VAC, 4W, 240-330V Range
301-2X	220/380VAC, 4W
301-3X	254/440VAC, 4W, 440-605V Range
301-3HX	277/480VAC, 4W, 125VDC 3A Contacts
301-4X	127/220VAC, 4W, 220-275V Range
301-4HX	120/208VAC, 4W, 125VDC 3A Contacts
301-5X	380VAC, 4W, 370-460V Range
301-6X	380VAC, 4W, 375-528V Range
301-7X	120/208VAC, 4W, 0.022 Sec. T.D.
301-8X	120VAC. 3W, 120-150VAC
301-9X	240VAC, 3W, 240-300V Range
301-11X	120/208VAC, Similar to 301-7X
301-12X	440VAC, 3W
301-13SX	120/208VAC, 4W, Hi-Shock, T.D., Solar
301-15X	120/208VAC, 4W, 140-180V Range
301-16X	254/440VAC, 4W, Sim to 301-3, but 3 XFMS
301-17SX	120VAC, 3W, Sim to 301-13SX except 120V
301-18X	277/480VAC,4W,3 independent adjustments
301-19SX	94VAC, 3W, Similar to 301-17SX
301-20SX	86/150VAC, 4W, 90-120V Range, T.D., Solar
301-21X	460VAC, 3W, 125VDC Contacts
301-22X	277/480VAC, 4W, 323-425V Range (L-N)
301-23X	380VAC, 3 or 4W, 0.022 Sec. T.D.
301-25X	120/208V, 4W, 2-3 Sec. T.D.
301-26X	416VAC, 3 or 4W, 415-520V Range
301-27X	277/480VAC, 4W, 2-3 Sec. T.D.
301-28X	20.8VAC, 3W, 20-25V Range
301-29X	480VAC, 3 or 4W, Sim. to 301-3X with spike supp.
301-30SX	100VAC, 3W, 100-125V Range, hi-shock
301-31X	208-240, 3W, 200-280V Range, 45-65 Hz.
301-32X	400VAC, 3W, 400-500V Range
301-34X	208VAC, 3W, Set 240V, Withstand 600V contin.
301-35X	120VAC, 3W, 3-5 Sec. T.D.
301-37X	120VAC, 3W, Sim. to 301-8X with spike suppression
301-39X	138/240VAC, 3 or 4W, 2 Sec. T.D.
301-40X	120/208VAC, 4W, Highest of 3, Solar
301-41SX	450VAC, 3W, Navy Hi-Shock, 75VDC 3A Contacts
301-42X	120VAC, 3W, Highest of 3, 120-150V Range
301-45X	120/208VAC, 4W, Highest of 3, Adj. T.D.
301-46X	104VAC, 3W, Similar to WOV-3-104

Catalog 5-1773450-5
Revised 3-13

www.te.com

Dimensions are shown for reference purposes only. Specifications subject to change.

Dimensions are in millimeters unless otherwise specified.

USA: +1 800 522 6752
Asia Pacific: +86 0 400 820 6015
UK: +44 800 267 666

For additional support numbers please visit www.te.com

Additional Relays (Continued)

301-47X	69/120VAC, 4W, 69-90V Range, 120V (L-N) Contin.
301-48X	380VAC, 3 or 4W, 380-500V Range
301-49X	250VAC, Withstand 520VAC Continuous
301-50X	180VAC, 3W, Similar to WOV-3-180
301-51X	120VAC, 3W, Supp, 10CFR Class1E (Nuclear)
301-52X	95VAC, 3W, 95-120V (L-L) Range
301-53X	115/200VAC, Similar to WOV-3-200, 1.0 Sec T.D.

AC, THREE PHASE, 400 HZ

303X	120/208VAC, 4W
303-1X	115/200VAC, 4W, Highest of 3, T.D., MIL-E-7894
303-1SX	115/200VAC, 3W, High Shock
303-2X	120/208VAC, 4W, High of 3, T.D., MIL-E-7894
303-3X	120/208VAC, Highest of 3, T.D.
303-4X	120VAC, 3W, 120-160V Range
303-8X	254/440VAC, 4W
303-9X	240/416VAC, 4W
303-10X	120/208VAC, 4W, 168V P.U., Kato
303-12X	120/208VAC, 4W, Fast Operating
303-13X	120/208VAC, 4W, 0 deg. C to 90 deg. C
303-15X	120/208VAC, Sim. to 303-13X with Latching Circuit
303-16X	120/208VAC, 303X with conformal coating

DC

310DCX	28VDC, 28-36V Range
310DC-HX	28VDC, 28-36V Range, 125VDC 2A Contacts
310DC-SX	28VDC, 28-36V Range, 2A Contacts, High Shock
310DC-2X	28VDC, 28-36V Range, T.D., MIL-E-7894 Fig. 2
310DC-3X	28VDC, 35-46V Range, T.D., MIL-E-7894
310DC-4X	28VDC, Set 31V, 2 Sec; 40V, 0.2 Sec.
311DCX	12VDC, 12-16V Range
311DC-1X	12VDC, 12-16V Range, 1V Differential
320DCX	60VDC, 60-85V Range
320DC-HX	60VDC, 60-85V Range, 125VDC 2A Contacts
320DC-1X	35-60VDC, Spike Suppression
320DC-2X	55-80VDC, Spike Suppression
320DC-4X	48VDC, 48-70V Range
320DC-5X	20-70VDC, 120VAC Control
330DCX	120VDC, 120-160V Range
330DC-HX	120VDC, 120-160V Range, 125VDC 2A Contacts
330DC-1X	120VDC, 110-150V Range
330DC-2X	120VDC, 150-190V Range
340DCX	240VDC, 240-300V Range
340DC-HX	240VDC, 240-300V Range, 125VDC 2A Contacts
340DC-1SX	200VDC, 240-300V Range, Non-Mag., High Shock
350DCX	305VDC, 280-400V Range
350DC-HX	305VDC, 280-400V Range, 125VDC 2A Contacts
350DC-1SX	250VDC, 280-400V Range, Hi-Shock, 120VAC Control
360DCX	405VDC, 400-470V Range
360DC-HX	405VDC, 400-470V Range, 125VDC 2A Contacts
360DC-1X	405VDC, 400-470V Range, Spike Suppression
360DC-2X	475VDC, 475-550V Range
360DC-3X	550VDC, 550-600V Range
360DC-4X	350VDC, 350-440V Range, Bi-Directional
360DC-4HX	350VDC, 350-440V Range, Bi-Directional
370DCX	620VDC, 600-670V Range
370DC-2X	550VDC, 550-650V Range
370DC-1X	610VDC, 600-800V Range, 120VAC Control
370DC-3X	610VDC, 800-1000VDC Range
370DC-5X	960VDC, 900-1000VDC Range

AC, SINGLE PHASE, 50/60 HZ, SPECIALS

400X	120VAC
400HX	120VAC, Sim. to 400X with 125VDC 3A Contacts
400SX	120VAC, Hi-Shock, 10A Contacts
400-1X	120VAC, 55-72V Range
400-1HX	120VAC, Sim. to 400-1X, 125VDC 3A Contacts
400-S-1	450VAC, 240-350V Range, Hi-Shock, T.D.
400-2X	120VAC, 0.017 Sec. T.D.
400-S-2	440VAC, 280-420V Range, Hi-Shock, T.D.
400-3X	120VAC, 4.8 Sec. T.D., 80-115V Range
400-S-3	440VAC, 280-420V Range, Hi-Shock, T.D.
400-4X	240VAC, 170-240V Range
400-S-4	440VAC, Sim. to 400-2SX, 2-3 Sec. T.D., D.O. 160V
400-5X	450VAC, 320-450V Range
400-5SX	450VAC, 70-100% Range, Hi-Shock, 10A Contacts
400-6X	120VAC, 90-123V Range
400-7X	277VAC, 190-290V Range
400-8X	120VAC, 55-80V Range
400-8SX	120VAC, 50-70% Range, Hi-Shock
400-9X	480VAC, 320-480V Range
400-10X	120VAC, 1.0 Sec. T.D. with power loss
400-11X	480VAC, 1.0 Sec. T.D., 320-480V Range
400-12X	120VAC, Similar to 400-10X except 1 N.O. & 1 N.C.
400-13X	120VAC, 14-30V Range
400-14X	67VAC, 30-67V Range, Suppression
400-16X	120VAC, 0.6 Sec. T.D., 50-420 Hz
400-17X	120VAC, Similar to 400-2 with seismic
400-19X	120VAC, 125VDC 2A Contacts, Suppression
400-20X	208VAC, 24-48V Range
400-21X	120VAC, 94.8-102V Range, 6 +/-2 Sec. T.D.
400-23X	480VAC, 320-480V Range, 2.0 Sec. T.D.
400-24X	120VAC, 2.0 Sec. T.D.
400-25X	240/480VAC, 3-30Sec. T.D., Latching
400-26X	480VAC, 160-200V Range
400-27X	460VAC, 250-350V Range, 0.3 Sec. T.D., Set to 76V
400-28X	0.5VAC, 0.5-1.0V Range, 115VAC Control
400-29X	120VAC, 0.15 Sec. T.D., 10A Contacts
400-30X	24VAC, 18-24VAC Adjustable
400-31X	120VAC, 105-135V Range
400-32X	120VAC, 1 Ph. T.D. 0-10 Sec.
400-33X	480VAC, 1 Ph. T.D., 0-10Sec.
400-34X	120VAC, 55-72V Range, 2 N.O. Contacts
400-35X	120VAC, Similar to 400X, but 2 N.C. Contacts

Dimensions are shown for reference purposes only. Specifications subject to change.

Dimensions are in millimeters unless otherwise specified.

USA: +1 800 522 6752
Asia Pacific: +86 0 400 820 6015
UK: +44 800 267 666

For additional support numbers please visit www.te.com

Additional Relays (Continued)

400-36X	120VAC, Similar to 400-24X, 1 N.O., 1 N.C. Contact
400-37X	120VAC, Similar to 400X, with Suppression
400-38X	120VAC, 85-120V, 1-20 Sec. T.D., Instant. at 50V
400-38PX	120VAC, Similar to 400-38X with Spike Protection
400-39X	120VAC, 1.0 Sec. T.D., Transient Protection
400-40X	120VAC, 0.083 Sec. T.D.
400-41X	120VAC, Similar to 400X with 2 N.O. Contacts
400-43X	240VAC, 120-240V Range
400-44X	208VAC, 150-210V Range
400-47X	380VAC, Fast Operating, 220VAC 5A Contacts
400-49X	120VAC, 55-80V Range, 125VDC Contacts
400-50X	480VAC, 320-480V Range, 125VDC 1A Contacts
400-51X	120VAC, Sim. to 400-38X with 1-30 Sec. T.D.
400-52X	120VAC, 55-80V Range, 125VDC 2A Contacts
400-53SX	450VAC, 110-300V Range, 120V Control
400-54X	120VAC, Sim. to 400-13X with 1.0 Sec. T.D.
400-55X	208VAC, 125-208V, 24VDC Ctrl., 1 N.O. Contact
400-56X	208VAC, 24-48V Range, 2 N.O. Contacts
400-57X	120VAC, 25 Hz, 84-120V, 125VDC 3A Contacts
400-58X	277VAC, 194-277V Range, 0.020 Sec. T.D.
400-59X	139VAC, 97-159V Range
400-60X	240VAC, 84-120V Range
400-6IPX	120VAC, Similar to WUV-1-120P
400-62X	120VAC,30-42V Range, 125VDC Contacts
400-63X	120VAC,30-42V Range, 120VAC Contacts

AC, SINGLE PHASE, 400 HZ

402X	120VAC
402-SX	120VAC, Hi-Shock, NSN 5945-00-258-6662
402-1X	240VAC, 170-240V Range
402-1SX	240VAC, High Shock
402-2X	120VAC, 90-120V Range, 0.3 Sec. T.D., Set to 96V
402-3X	120VAC, Similar to 402-2X with 10A Contact
402-4X	120VAC, Similar to 402-2X with 0.15 Sec. T.D.

AC & DC, SINGLE PHASE, CLOSE DIFFERENTIAL

D100-10X	120VAC, 50-500Hz, -40 to +75 deg. C
D100-13X	450VAC, D.O. 60-100%, P.U. 66-100%
D100-15X	120VAC, 50-500Hz, 125VDC, 1 Amp Contacts
D100-16X	208VAC, 50-500Hz, 125VDC, 1 Amp Contacts
D100-17X	120VAC, 50-500Hz, 450VAC Input Capacitor, GE
D100-18X	120VAC, Hi-Shock, D.O. 72-84, P.U. 102-114 Range
D100-19X	120VAC, Hi-Shock, D.O. 80-120, P.U. 80-120 Range
D100-20X	150VAC, 105-150V Range
D100DCX	60 VDC, 48-55VDC Range, 1.5 Sec. T.D.
D100DC-15X	120VDC, 80-120VDC Adjust,0.4V Differential
D100DC-16X	60VDC, 40-60VDC Adjust, 0.2V Differential
D100DC-18X	40VDC, 20-40VDC Adjust, 120VAC Control
D100DC-19X	140VDC, 100-140VDC, 0.4V Differential
D100DC-22HX	120VDC, 80-120VDC Range, 120VDC Contacts
D100DC-23X	260VDC, 195-260VDC Range
D100DC-35X	30-40VDC Range, Plug-in, NSN 5945-00-650-8613
D100DC-36X	48VDC, Adjustable 38-48VDC
D100DC-37X	75VDC, 50-80VDC Range, 0.5A, 74VDC Contacts
D100DC-38X	270VDC, 190-270VDC Range, Similar to D100DC-23
D100DC-39X	28VDC, Adjustable 15-30VDC
D100DC-40X	28VDC, Approx. 2.0 Sec T.D.

AC, THREE PHASE, 50/60 HZ, SPECIALS

401X	120/208VAC, 4W, 85-120V Range
401-HX	120/208VAC, 4W, 125VDC 3A Contacts
401-1X	240VAC, 4W, 182-244V Range (L-L)
401-2X	480VAC, 4W, 360-485V Range (L-L)
401-2HX	480VAC, 3 or 4W, 125VDC 3A Contacts
401-3X	220VAC, 3W, 160-200V Range (L-L)
401-4X	380VAC, 4W, 150-220V Range (L-N)
401-5X	120VAC, 4W, 90-120V Range (L-L)
401-6X	120VAC, 3W, 85-120V Range (L-L)
401-7X	480VAC, 4W, 332-407V Range (L-L)
401-8X	100VAC, 3W, 70-100V Range (L-L)
401-9X	120/208VAC, 4W, Fast Operating
401-9HX	120/208VAC, 4W, 0.02S T.D., 125VDC 3A Cont.
401-10X	480VAC, 3W, 360-485V Range
401-10HX	480VAC, 3W, 125VDC 3A Contacts
401-11X	240VAC, 3W, 180-240V Range
401-11HX	240VAC, 3W, 125VDC 3A Contacts
401-12X	120/208VAC, 4W, 1.0 Sec. T.D.
401-12HX	120/208VAC, 4W, 1.0 Sec. T.D., 125VDC 3A Contacts
401-13X	380VAC, 3W, 1.0 Sec. T.D.
401-14X	480VAC, 4W, 0.5 Sec. T.D.
401-15X	120/208VAC, Sim. to 401X with 6" leads and socket
401-16X	380VAC, Sim. to 401-4X with 6" leads and socket
401-17SX	120/208VAC, 4W, 10 Sec. T.D., Solar
401-18X	480VAC, 3W, 2.0 Sec. T.D., 90% P.U., 70% D.O.
401-19X	120/208VAC, Sim. to 401X with 2KV Diodes, Supp.
401-20X	69/120VAC, 4W, 25-35V Range, 4KV Diodes, Supp.
401-21X	120/208VAC, 4W, 85-120V Range, 0.05 Sec. T.D.
401-22X	480VAC, 3 or 4W, 5.0 Sec. T.D.
401-23X	120VAC, 3W, 0.05 Sec. T.D.
401-24X	120VAC, 3W, 2 N.C. Contacts
401-25SX	120VAC, 3W, 10Sec. T.D., Solar
401-26X	67/115VAC, 4W, Suppression
401-28X	120/208VAC, 4W, 60-100V Range, Set at 90V
401-29X	120VAC, 4W, 90-120V Range, 1.0 Sec. T.D.
401-29HX	69/120VAC, 4W, 1.0 Sec. T.D., 125VDC 3A Contacts
401-30X	480VAC, 3W, 360-480V Range, 2.0 Sec. T.D. 125VDC 3A Contacts
401-31SX	94VAC, 3W, 10 Sec. T.D., Solar
401-33X	480VAC, 4W, 139-231V Range (L-N)
401-34X	120/208VAC, 4W, 2-3 Sec. T.D.
401-35X	208VAC, 3W, 0.008 Sec. T.D., 28VDC Control
401-36X	480VAC, 3W, 0.008 Sec. T.D., 28VDC Control

Dimensions are shown for reference purposes only. Specifications subject to change.

Dimensions are in millimeters unless otherwise specified.

USA: +1 800 522 6752
Asia Pacific: +86 0 400 820 6015
UK: +44 800 267 666

For additional support numbers please visit www.te.com

Additional Relays (Continued)

401-37X	120VAC, 3W, 5.0 Sec. T.D.
401-38X	380VAC, 3W, 0.05 Sec. T.D.
401-39X	480VAC, 4W, 250-550V Range (L-L)
401-41X	240/416VAC, 4W, 312-416V Range (L-L)
401-41HX	230/400VAC, 4W, 125VDC 3A Contacts
401-42X	120/208VAC, 4W, 5.0 Sec. T.D.
401-43SX	480VAC, Sim. to 403-7SX except 60 Hz.
401-44X	139/240VAC, 4W, 2.0 Sec. T.D.
401-45X	120VAC, 3W, 85-120V Range (L-L), 125VDC Contacts
401-46X	480VAC, Similar to 401-2X with Suppression
401-47X	380VAC, 3W, 2.0 Sec. T.D.
401-48X	208VAC, 3W, 145-208V Range
401-49X	20.8VAC, 3W, 15.5-20.8V Range
401-50X	120VAC, 3W, 0-10 Sec. T.D.
401-51SX	90/156 VAC, 4W, Similar to 401-17SX
401-52X	480VAC, 3W, Sim. to 401-10X
401-53X	120/208VAC, 4W, 1 N.O., 1 N.C.
401-54X	400VAC, 3W, 300-400V Range
401-55X	600VAC, 3W, 480-600V Range
401-58X	120/208VAC, Sim. to 401X except 2 N.C. Contacts
401-59X	220-380VAC, Dual Voltage 220V or 380V
401-60X	480VAC, 1 N.O., 1 N.C. Contact, 2-3 Sec. T.D.
401-61X	120VAC, 3W, 85-120V Range (L-L), 1.0 Sec. T.D.
401-62X	380VAC, 3W, 220VAC 5A Contacts
401-63X	120VAC, 3W, Sim. to 401-6X with Suppression
401-67X	120/208VAC, 4W, 1.0 Sec. T.D., -55F to +150F
401-68X	120VAC, 3W, 85-120V Range, 2-3 Sec. T.D.
401-69X	120/208VAC, 4W, 85-120V Range, Lowest of 3
401-70X	133/230VAC, 4W, 99-133V Range, Lowest of 3
401-71X	220/380VAC, 4W, 154-220V Range, Lowest of 3
401-72X	266/460VAC, 4W, 186-266V Range, Lowest of 3
401-74X	66/115VAC, 4W, 65-75% Adj., Supp., 125VDC Cont.
401-75X	115/200VAC, 3W, 65-75% Adj., Suppression
401-76SX	450VAC, 3W, 382-450V, 0.3-0.5S T.D., Hi-Shock
401-77X	120/208VAC, 4W, 0.5-10 Sec. T.D., Lowest of 3
401-79X	480VAC, 3W, 0.2-0.3 Sec. T.D., Suppression
401-80X	76VAC, 3W, 53-76V Range
401-81X	120/208VAC, Sim. to 401-12X with 48VDC Contacts
401-82X	104VAC, 3W, Similar to WUV-3-104
401-83SX	120/208VAC, MIL-R-2033A
401-84X	180VAC, 3W, Similar to WUV-3-180
401-85SX	480VAC, Similar to 401-25SX except 480V
401-86SX	380VAC, Similar to 401-25SX except 380V
401-87SX	240VAC, Similar to 401-25SX except 240V
401-90X	120/208VAC, 4W, 0.5 Sec. T.D.
401-93X	480VAC, 3W Fast Oper. 50mS., Suppression
401-97X	69/120VAC, Lowest of 3
401-98X	480VAC, Sim. to 401TD-9HX with 2.0 Sec. T.D.

AC, THREE PHASE, 400 HZ

403X	120/208VAC, 4W
403-1X	115/200VAC, 4W, 35-400mS T.D.
403-1SX	115VAC, 3W, Hi-Shock
403-2X	120VAC, 3W
403-3X	120/208VAC, 4W, 1.0 Sec. T.D.
403-4X	254/440VAC, 4W
403-5X	120/208VAC, 4W, 2 N.C. Contacts
403-7SX	480VAC, 3W, T.D., Hi-Shock
403-10X	120/208VAC, 4W, 10A Contacts
403-11X	480VAC, 4W, 60% to 80% Range
403-13X	120/208VAC, 4W, 0C to +90C
403-14X	575VAC, 3W, 400-500V Range
403-15X	120/208VAC, Sim. to 403-13X with Latching Circuit
403-16X	120/208VAC, Sim. to 403X with Conformal Coating

AC THREE PHASE, CLOSE DIFFERENTIAL

D101-3X	Similar to D101X, -55C to +85C
D101-5X	120VAC, 50-500Hz, Military
D101-9X	120VAC, 50-500Hz, 0.5 Sec T.D.
D101-11X	120VAC, 50-500Hz, 120-150VAC Adjust, N.C. Cont.
D101-12X	120VAC, Similar to D101X but 60-120VAC Range
D101-13X	120VAC, Similar to D101X but 3 N.C. Contacts
D101-14X	208VAC, Similar to D101-6X but 3 N.C. Contacts
D101-15X	480VAC, 50-500Hz, Spike Suppressors
D101-16X	480VAC, Similar to D101-7X but 3 N.C. Contacts
D101-17X	120VAC, 0.4A 120VDC Contact, -20 to +85 deg C
D101-18X	120VAC, Similar to D101X but Spike Suppression
D101-19X	208VAC, Similar to D101-6X but Spike Suppression
D101-20X	240VAC, Similar to D101-4X but Spike Suppression
D101-21X	380VAC, Similar to D101-10X but Spike Suppression
D101-24X	240VAC, 3 N.C. Contacts
D101-25X	208VAC, 3 N.C. Contacts, Spike Suppression
D101-26X	277VAC, 50-500Hz, 66-100% Adjustable
D101-27X	120VAC, Sim. to D101X, withstand 208V continuous
D101-29X	415VAC, 50-500Hz
D101-30X	380VAC, 50-500Hz, 3 N.C. Contacts
D101-31X	525VAC, Spike Suppression
D101-32X	120VAC, 50-500Hz, 5 Sec T.D.

DC

400DCX	120VDC, 85-120V Range
400DC-HX	120VDC, 85-120V Range, 125VDC 2A Contacts
400DC-IX	28VDC, 15-29V Range
400DC-2X	240VDC, 180-220V Range
400DC-3X	62.5VDC, 40-65V Range
400DC-4X	305VDC, 200-300V Range
400DC-5X	5.6VDC, 4-6V Range, 120VAC Cont
410DCX	28VDC, 16—29V Range
410DC-SX	28VDC, 16-29V Range, Hi-Shock, MIL-R-57
410DC-1X	28VDC, 15-32V Range, 1.5V Differential
410DC-5X	24VDC, 16-29V Range, Suppression
410DCTDX	28VDC, 0.5-20 Sec. T.D.
411DCX	12VDC, 9-12 V Range
411DC-1X	15VDC, 11-15V Range
411DCTDX	12VDC, 0.5-20 Sec. T.D.
420DCX	60VDC, 40-65V Range

Dimensions are shown for reference purposes only. Specifications subject to change.

Dimensions are in millimeters unless otherwise specified.

USA: +1 800 522 6752
Asia Pacific: +86 0 400 820 6015
UK: +44 800 267 666

For additional support numbers please visit www.te.com

Additional Relays (Continued)

420DC-4X	48VDC, 32-48V Range
420DC-5X	48VDC, 20-48V Range
420DC-6X	70VDC, 50-70V Range
420DC-8X	32VDC, 33-40V Range (Pick-Up)
420DC-9X	48VDC, Similar to 420DC-4X with 2 N.O. Contacts
420-470 SUFFIX	SUFFIX : "A" 2 N.O. Contacts "B" 2 N.C. Contacts
430DCX	120VDC, 85-120V Range
430DC-HX	120VDC, 85-120V Range, 125VDC 3A Contacts
430DC-1X	140VDC, 105-140V Range
430DC-2X	140VDC, 105-140V Range, 0.5 Sec. T.D., Suppression
430DC-3X	120VDC, 50-80V Range
430DC-4X	120VDC, 85-120V Range, 0.5 Sec. T.D., Set at 90V
430DC-5X	125VDC, 90-125V Range, Spike Suppression
430DC-6X	125VDC, 105-140V Range, 3.0-5.0 Sec. T.D.
430DC-7X	170VDC, 120-170V Range
430DC-8X	120VDC, 85-120V Range, 2 N.C. Contacts
430DC-9X	100VDC, 35-50V Range
430DC-10X	120VDC, 85-120V Range, 2 N.O. Contacts
440DCX	240VDC, 168-240V Range
440DC-HX	240VDC, 168-240V Range, 125VDC 3A Contacts
440DC-1X	280VDC, 190-260V Range
450DCX	305VDC, 230-305V Range
450DC-HX	305VDC, 230-305V Range, 125VDC 3A Contacts
450DC-1X	305VDC, 230-305V Range, 2 N.C. Contacts
460DCX	405VDC, 315-415V Range
460DC-HX	405VDC, 315-415V Range, 125VDC 3A Contacts
460DC-1X	405VDC, 300-330V Range
460DC-3X	405VDC, 300-425V Range
460DC-4X	432VDC, 275-325V Range
460DC-5X	470VDC, 300-425V Range
470DC	560VDC, 400-500V Range
470DC-1X	585VDC, 400-500V Range

DC TIME DELAY

420DCTDX	48VDC, 32-48V Range, 0.5-20 Sec. T.D.
430DCTDX	125VDC, 83-125V Range, 0.5-20 Sec. T.D.
440DCTDX	250VDC, 166-250V Range, 0.5-20 Sec. T.D.

OVER/UNDERVOLTAGE RELAYS

AC, SINGLE PHASE

250SX	120VAC, Hi-Shock
250-1X	120VAC, 72-120V, Mil, NSN 6125-00-091-0969
250-2X	120VAC, 1.2 Sec. Time Delay
250-3X	67VAC, UV 30-67V, OV 67-91V
250-4X	26VAC, 28VDC Control, Connector
250-5X	240VAC, Two N.C. Contacts
250-6X	240VAC, One N.O., One N.C. Contact
250-6HX	240VAC, 120VDC, 3A Contact
250-7X	120VAC, 3 Sec. Time Delay
250-8X	100VAC
250-10X	120VAC, Fast Trip, 25mS
250-11X	120VAC, Set at 97V and 156V
250-12X	120VAC, Sim. to 250X, MIL-R-5757 2A
250-14XAC	67VAC, Sim. to 250-3X with removable cover
250-17X	120VAC, Sim. to 250X plus suppression
250-19X	120VAC, Sim. to 250X with 2 N.O. Contacts
250-22X	240VAC, 1-2 Sec. TD on Drop Out
250-23X	120VAC, Sim. to 250X but -40C to +52C
250-27X	139VAC, Same as 250-12X except voltage
250-28X	138VAC, Same as 250-10X except voltage
250-29HX	120VAC, 50-400Hz., 125VDC 3A Contacts
250-30X	480VAC
250-31X	240VAC, Fast Trip 25mS
250-32HX	480VAC, 100Hz, 1Sec TD, 120V 3ADC Contacts
250-33HX	480VAC, 25Hz, 1 Sex TD, 120V 3ADC Contacts
250-34X	120VAC, 72-120-160V Range, Hi Shock
250-35X	230VAC, Sim. to 250-22X, 3.0 Sec. TD
250-36X	120VAC, 84-120-150V Range, Hi Shock, -40C to 70C
250-37HX	120VAC, 25 Hz, 1 Sec. TD, 120V 3ADC Contacts
250-38X	240VAC, Two N.O. Contacts
250-39X	120VAC, Similar to 250X, Range +/- 35%

AC, SINGLE PHASE, 50-400HZ

251SX	120/208VAC, Sim. to 251X with Hi Shock
251-1X	120/208VAC, 4W, 0.50 Sec. TD NSN 5895-00-139-0337
251-4X	139/240VAC, 4W
251-5X	120/208VAC, 4W, Two N.C. Contacts
251-8X	120/208VAC, 4W, 1.2 Sec. TD
251-10X	110/190VAC, 4W
251-13X	120/208VAC, Sim. to 251X except -40C to 52C
251-14X	120/208VAC, 4W, Withstand 220/380V Continuous
251-15X	120/208VAC, Sim. to 251X with Transient Protection
251-16X	120/208VAC, 1.2 Sec. TD, Transient Protection
251-17X	120/208VAC, Similar to 251X, 208V 7.5A Contacts
251-18X	120/208VAC, Highest/Lowest of three, TD Adjust 12VDC control
251-19X	120/208VAC, Highest/Lowest of three, TD Adjust 120VAC control
251-20X	120/208VAC, Highest/Lowest of three, TD Adjust, 24VDC Control
251-21X	120/208VAC, Sim. to 251X, 0.5Sec. TD
251-22X	115/200VAC, Sim. to 251X, 0.75Sec. TD
253-HX	230VAC, 3W, 48VDC 3A Contacts
253-1X	230VAC, 3W, Spike Suppression
253-1HX	230VAC, 3W, Spike Suppression, 125VDC Contacts
253-3X	230VAC, 3W, 1.0 Sec. TD
253-5X	230VAC, 3/4W, 2 N.C. Contacts, -51C to +71C
253-6X	230VAC, 3W, 3.0 Sec. TD
254-1X	415VAC, 3W, 290-415-519V
254-2X	220/380VAC, 4W, 2 N.C. Contacts
254-3X	416VAC, 3/4W, 2 N.C. Contacts, -51C to 71C
255-HX	460VAC, 3W, 125VDC 3A Contacts
255-1X	460VAC, 3/4W, Spike Suppression
255-2X	480VAC, 3W, High Shock
255-3X	495VAC, 3W, 3.0 Sec. TD

Dimensions are shown for reference purposes only. Specifications subject to change.

Dimensions are in millimeters unless otherwise specified.

USA: +1 800 522 6752
Asia Pacific: +86 0 400 820 6015
UK: +44 800 267 666

For additional support numbers please visit www.te.com

Additional Relays (Continued)

255-4X	460VAC, 3W, 2 N.O. Contacts, EMD # 9333490
255-5X	460VAC, 3W, Sim. to 255-4X, MIL-R-5757, 10A Relay
255-6X	460VAC, 3W, EMD# 9337151
255-7X	460VAC, 3W, Sim. to 255X, Fast operating, 40mSec.
255-8X	480VAC, 3W, 5.0 Sec. fixed TD, 120VAC Control
255-9X	480VAC, 3W, Sim. to 255-8X except +/- 10% Setting

AC, SINGLE PHASE, 50-400HZ

256-1X	600VAC, 3W, 60Hz, 2 N.O. Contacts, EMD Canada
256-2X	575VAC, 3W, GM# 6964912 Rev. A

DC

250DC-HX	24VDC, 16-24-30V Range, 48VDC 3A Contacts
250DC-1X	28VDC, MIL Shock and Vibration
250DC-2X	26VDC, UV 20-30V, OV 26-36V
250DC-3X	28VDC, 20-28-35V Range, Hi Shock, -40C to 70C
250DC-4X	14VDC, Commonwealth Edison
250DC-5X	28VDC, Commonwealth Edison
251DC-1X	48VDC, Removable Cover
251DC-2X	35VDC, UV 23-30V, OV 40-52V
251DC-3X	30VDC, UV 21-27V, OV 30-40V
251DC-HX	48VDC, 32-48-60V, 48VDC 3A Contacts
251DC-4X	60VDC, 45-60-75VDC, 2N.O. 120VAC Contacts
252DCX	120VDC, 85-120-150V Range
252DC-1X	130VDC, 80-130/120-150V Range
252DC-1HX	125VDC, 85-125/125-160V, 48VDC 3A Contacts
252DC-2X	130VDC, 80-130/120-150V, Removable Cover
253DCX	250VDC, 175-250-315VDC Range
253DC-HX	250VDC, 175-250-315VDC, 48VDC 3A Contacts

REVERSE POWER RELAYS

AC, SINGLE PHASE

710-HX	120/220/266VAC, 125VDC 3A Control
710-PX	120/220/266VAC, 0.2-1.0A, Spike Suppression
710-1X	120/220/266VAC, 125VDC 1/4A Control
710-3X	120VAC (L-N), 1 Phase, 3-5A

120/220/266VAC. SINGLE PHASE TIME DELAY

710TD-1X	0.05-0.25A, 0.5-10 Sec. T.D. with Knobs
710TD-5X	2 N.O. Contacts
710TD-7X	60Hz, Reverse Inductive
710TD-7PX	Similar to 710TD-7X with Suppression
710TD-8X	Similar to 710TDX with -55F to +150F
710TD-9X	Similar to 710TDX with Suppression
710TD-12X	Similar to 710TDX, 125VDC 2A Contacts
710TD-14X	50Hz, Reverse Inductive
720TD-14X	120 V, L-L, 50Hz, Reverse Inductive
721TD-14X	230 V, L-L, 50Hz, Reverse Inductive
722TD-14X	380 V, L-L, 50Hz, Reverse Inductive
723TD-14X	460 V, L-L, 50Hz, Reverse Inductive
724TD-14X	575 V, L-L, 50Hz, Reverse Inductive
725TD-14X	415 V, L-L, 50Hz, Reverse Inductive
726TD-14X	100 V, L-L, 50Hz, Reverse Inductive
727TD-14X	185 V, L-L, 50Hz, Reverse Inductive

PHASE SEQUENCE RELAYS

AC, THREE PHASE

900-2PX	208-230VAC, Spike Suppression
900-4X	208VAC, 50/60 Hz
900-5X	120VAC, 50/60Hz
900-8X	120VAC, 60 Hz, 125VDC 2A Contacts
900-10X	120VAC, 60 Hz, Spike Suppression
901-1X	440VAC, 60 Hz, 5A Contacts
901-5X	575VAC, Porcelain Term., AZ Relay
901-6X	460VAC, 60 Hz, Spike Suppression
901-SX	440VAC, 55-65HZ, HI-Shock
910-1X	220/440VAC, 60 Hz, N.O. Contacts
910-2X	220/440VAC, 60 Hz, Reversed Contact Operation
910-3X	220/440VAC, 60 Hz, Porcelain Term., Sigma Relay
920X	380VAC, 50 Hz
920-1X	380VAC, 50 Hz, Mounting per 21-037
920-2X	380VAC, 50 Hz, Porcelain Terminals, Sigma Relay
920-3X	416VAC, 50 Hz, 5A Contacts
920-5X	220/380VAC, 50 Hz
920-6X	440VAC, 50 Hz
930X	208VAC, 400 Hz
930-1X	208VAC, 400Hz, 2A at 28VDC Contacts, Energized A-B-C, 5A
930-3X	400VAC, 400Hz
930-4X	400VAC, 2 N.C. Contacts, -51C to +71C
931X	120VAC, 400 Hz.
932-5X	115/200VAC, 400Hz, 2A Contact,Hi-Shock
932-7X	230/400VAC, 400Hz

PHASE FAILURE RELAYS

980X	120VAC, 60 Hz, no T.D. on Starting
981X	230VAC, 60 Hz, no T.D. on Starting
982X	460VAC, 60 Hz, no T.D. on Starting
983X	380VAC, 60 Hz, no T.D. on Starting
984X	575VAC, 60 Hz, no T.D. on Starting
985X	525VAC, 60 Hz, no T.D. on Starting
1980X	120VAC, 60 Hz
1981X	230VAC, 60 Hz
1982X	460VAC, 60 Hz
1983X	380VAC, 50 Hz
1984X	575VAC, 60 Hz
1985X	525VAC, 60 Hz
1986X	415VAC, 50 Hz
1987X	380VAC, 60 Hz
SUFFIX:	"-S": Time Delay (0.5 - 30 Sec.) "-3S": Factory Set Time Delay (0-60 Sec.)
1981-1SX	230VAC, Similar to 1981X except 50 Hz
1980-2SX	120VAC, Similar to 1980X except N.C. Contacts

AC, THREE PHASE, VOLTAGE SENSITIVE

1003X-60HZ	380VAC, Similar to 1003X except 60HZ
1009X	415VAC, 50 Hz
1010X	208VAC, 50 Hz.

Catalog 5-1773450-5
Revised 3-13

www.te.com

Dimensions are shown for reference purposes only. Specifications subject to change.

Dimensions are in millimeters unless otherwise specified.

USA: +1 800 522 6752
Asia Pacific: +86 0 400 820 6015
UK: +44 800 267 666

For additional support numbers please visit www.te.com

Additional Relays (Continued)

1001X-1010X SUFFIX "-1": N.C. Contact (example: 1004-1X)
1001X-1010X SUFFIX "-2": -53C to +70C, 2% Drift below -20C
1001X-1010X SUFFIX "-3": 400Hz, N.O. Contacts
1001X-1010X SUFFIX "-T': Spike Suppression
1001X-1010X SUFFIX "-H': 125VDC 3A Contacts
1001X-1010X SUFFIX "-9" 1 N.O. & 1 N.C. Contacts
1001X-1010X SUFFIX "-12": Spike Supp., 125VDC 3A Contacts
1001X-1010X SUFFIX "-13": 1N.O + 1 N.C. 125VDC 3A Contacts

OVERCURRENT RELAYS

1100X	120VAC, 1-5A Range
1100-1X	120VAC, 0.5-5A Range, Remote Adjust
1100-2X	120VAC, 0.5-5A Range
1100-2SX	120VAC, 0.5-5 A Range, Hi-Shock, 2A Contact
1100-9X	120VAC, 1-5A, Fast Operating
1100-11X	120VAC, 1-5A, 3% Diff., Suppression 2.5KV
1100-13X	120VAC, 1-5A, 2 N.C. Contacts
1100-14X	120VAC, 7-30A, 2 N.C. Contacts
1100-15X	120VAC, 2-10A, 2 Sec. T.D.
1100-17X	120VAC, 1-5A, 2 Sec. T.D.
1100-18X	120VAC, 0.05-0.15A, 5A Max, 400 Hz
1100-19X	24VDC, 1-5A Range
1100-20X	120VAC, 1-5A, Suppression (15 times in-rush)
1100-21X	74VDC, 7-30A, 50mS T.D., Shock & Vibration
1100-22X	120VAC, 1-5A Remote Adjust
1100-23X	125VDC, 0.25-1.8A, 1 N.O. 125VDC 2A Contact
1100-24X	32VDC, 1-5AAC Range
1100-25X	120VAC, 0.25-1.25A
1100-26X	120VAC, 0.3-1.5A, Withstand 5A
1100-27X	220VAC, 1-5A Range, 220VAC Contacts
1100-32X	120VAC, Undercurrent 1-10A Adj, 0.2-5 Sec. T.D.
1100-35X	120VAC, 0.1-0.4A Range
1100-36X	74VDC, 4-20A, 50mS T.D., Shock & Vibration
1100-37X	24VDC, 0.1-0.3A Range
1100-38X	74VDC, Similar to WC1-74DC-5

AC, SINGLE PHASE, ADJ. DIFFERENTIAL

D1100X	120VAC, 1-5A Range
D1100-2X	220VAC, 1-5A Range
D1100-3X	120VAC, 4-12A Range
D1100-4X	230VAC, 4-12A Range
D1100-5X	460VAC, 4-12A Range
D1100-6X	120VAC, 1-5A Range, 1-2 Sec. T.D.
D1100-7X	120VAC, 0.7-5A Range, 125VDC 0.5A Contacts
D1100-8X	120VAC, 5-15A Range

AC, SINGLE PHASE, TIME DELAY

1100TDX	120VAC, 1-5A Range, 0.5-30 Sec. T.D.
1100TD-HX	120VAC, 1-5A, 0.5-30 Sec. T.D., 125VDC 3A Cont.
1100TD-SX	120VAC, 1-5A Range, 0.5-20 Sec. T.D., Hi-Shock
1100TD-1X	240VAC, 1-5A Range, 0.5-30 Sec. T.D.
1100TD-2X	24VDC, 1-5AAC Range, 0.5-30 Sec. T.D.
1100TD-3X	120VAC, 0.5-5A Range, 0.5-30 Sec. T.D.
1100TD-5X	120VAC, 0.5-2.5A Range, 0.5-30 Sec. T.D.
1100TD-6X	120VAC, 1-5A , 0.2-20 Sec. T.D., Manual Reset
1100TD-8X	220VAC, 2-10A Range, 220VAC 5A Contacts
1100TD-9X	24VDC, 0.5-5AAC Range, 0.5-20 Sec. T.D.
1100TD-10X	120VAC, Sim. to WCT1-120AC-5 w/ removable cover
1100TD-11X	120VAC, Sim. to WCT1-120AC-5, 1-5 Min. T.D.
1100TD-12X	120VAC, Sim. to WCT1-120AC-5, 0.5-5 Sec. T.D.
OPTION	1: 0.2A to 1.0A Range 2.5: 0.5A to 2.5A Range 5: 1.0A to 5.0A Range 10: 2.0A to 10.0A Range

AC, THREE PHASE, TIME DELAY

1130TDX	120VAC, 1-5A, 0.5-20 Sec. T.D.
1130TD-1X	24VDC, 1-5A, 0.5-20 Sec. T.D.
1130TD-2X	120VAC, 1-5A, 0.5-20 Sec. T.D., Suppression
1130TD-3X	120VAC, 1-5A, 0.5-60 Sec. T.D., 2 N.C. Contacts
1150X	120VAC, 4.35A, 0.5-5 Sec. T.D.
1150-1X	120VAC, 4.26A, 0.5-5 Sec. T.D.
1150-2X	120VAC, 3.72A, 0.5-5 Sec. T.D.
1150-4X	120VAC, 1-5A, (P.G.E.)
1150-6X	120VAC, 1-5A, 2-3 Sec. T.D. on D.O.
1150-8X	120VAC,Same as 1150-2X with 2 N.O. Contacts
1150-10X	120VAC, 1-5A, 2 Sec. T.D.
1150-10SX	120VAC, 1-5A, 2 Sec. T.D., Hi-Shock
1150-11X	120VAC, 2.5-5A, 400Hz, Special T.D. Curve
1150-12X	120VAC, 2.5-5A, 60Hz, Special T.D. Curve
1150-14X	120VAC, 2.5-5A, 400Hz, T.D. Curve, Aux. N.O.
1150-15X	24VDC, 1.2-2.2A, 60Hz, T.D. Curve, (Solar)
1150-16X	24VDC, 2.5-4.3A, 60Hz, T.D. Curve, (Solar)

VOLTAGE RESTRAINT

1200X	120VAC, 1-5A, 24VDC Control
1200-1X	120VAC, 1-5A, 12VDC Control
1200-4X	120/208VAC, 1-5A, 3 Phase, 24VDC Control
1200-5X	120VAC, 1-5A, 3 Phase, 24VDC Control
1200-6X	120VAC, 1-5A, 3 Phase, 24VDC Control, Suppression
1200-7X	120VAC, 1-5A, 1 Phase, 120VAC Control
1200-8HX	120VAC, 1-5A, 3 Phase, 125VDC Control

DC

1100DCX	120VAC, 10-50mV ext. Shunt, 5A Contacts
1100DC-1X	230VAC, 0-10VDC ext. Shunt, 5A Contacts
1100DC-2X	120VAC, 10-50mV ext. Shunt, Transistor Output
1100DC-3X	120VAC, 0.2-0.6ADC with 0.125 ohm Shunt
1100DC-4X	28VDC, 10-50mV, Inverter, ext. Shunt, 2 Sec. T.D.
1100DC-6X	125VDC, 10-50mV, Inverter, 125VDC 3A Contacts
1100DC-7X	120VAC, 10-50mV, Inverter, 125VDC 3A Contacts
1100DC-8X	120VAC, isolated outputs
1100DC-9X	250VDC, 150mV Shunt, Hi-Shock, +/- 20% Adj.
1100DC-10X	120VAC, 50-150mV
1100DC-11X	220VDC, 5-25mV, 1-25 Sec. T.D., Inverse Current
1100DC-13X	120VAC, 20-35mV, Hi-Shock
1100DC-15X	12VDC, 10-50mV, Inverter
1100DC-17X	74VDC, 10-50mV, Inverter
1100DC-20X	120VAC, Similar to 1100DCX except 4-25mV

Catalog 5-1773450-5
Revised 3-13

www.te.com

Dimensions are shown for reference purposes only. Specifications subject to change.

Dimensions are in millimeters unless otherwise specified.

USA: +1 800 522 6752
Asia Pacific: +86 0 400 820 6015
UK: +44 800 267 666

For additional support numbers please visit www.te.com

Additional Relays (Continued)

UNDERCURRENT RELAYS

21-693-1	Self Contained CT, 120VAC Control
21-693-2	Self Contained CT, 230VAC Control

CURRENT DIFFERENTIAL

1350X	24VDC, 0.1-0.5A Range
1350PX	24VDC, 0.1-0.5A Range, Suppression, 1 N.O. Contact
1350SX	24VDC, 0.1-0.5A Range, High Shock
1350-1X	24VDC, 0.1-0.5A Range, 1 N.C. Contact
1350-3X	48VDC, 0.1-0.5A Range
1351X	120VAC, 0.1-0.5A Range
1351PX	120VAC, 0.1-0.5A Range, Suppression
1351SX	120VAC, 0.1-0.5A Range, High Shock
1351-1X	120VAC, 0.1-0.5A Range, 1 N.C. Contact
1351-2X	120VAC, 2 Sec. T.D. on application of voltage
1351-4X	120VAC, 0.1-0.5A Range, Fast, 125VDC Contacts

PARALLELING (SYNCHRO-CHECK) RELAYS

1880X	200VAC, 1 N.O. & 1 N.C. Contact
1890X	90VAC, 1 N.O. & N.C. Contact
SUFFIX	"-A": Two Normally Open Contacts
	"-B": Two Normally Closed Contacts
	"-P": Spike Suppression
	"-7": 0.025 Second Time Delay
	"-9": 125VDC 2A Contacts
	"-13": 0.250 Second Time Delay

DEAD BUS TYPE

1880DBX	200VAC, 1 N.O. & 1 N.C. Contact
1890DBX	90VAC, 1 N.O. & 1 N.C. Contact
SUFFIX	"-A": 2 Normally Open Contacts
	"-B": 2 Normally Closed Contacts
	"-S": High Shock
	"-2": 2 N.O. Contacts, Cond. 5 same as 3
	"-3": Condition 1 reversed
	"-5": 12 deg. to 36 deg. adjustment
	"-8" 3 Phase, Phase Sequence
	"-9": 125VDC 2A Contacts
	"-12": 25 Hz, 125VDC 3A Contacts

DOUBLE DEAD BUS (EITHER BUS DEAD)

1880DDBX	200VAC, 1 N.O. & 1 N.C. Contact
1890DDBX	90VAC, 1 N.O. & 1 N.C. Contact
SUFFIX	"-A": 2 Normally Open Contacts
	"-B": 2 Normally Closed Contacts
	"-9": 125VDC Contacts; 2A res. , 1A ind.

DOUBLE DEAD BUS, UNDERVOLTAGE

2800-120	120VAC, Ph. Ang. 5-25 deg., UV: 70% D.O. 80% P.U.
2800-208	208VAC, Ph. Ang. 5-25 deg., UV: 70% D.O. 80% P.U.
2800-240	240VAC, Ph. Ang. 5-25 deg., UV: 70% D.O. 80% P.U.
2800-380	380VAC, Ph. Ang. 5-25 deg., UV: 70% D.O. 80% P.U.
2800-416	416VAC, Ph. Ang. 5-25 deg., UV: 70% D.O. 80% P.U.
2800-440	440VAC, Ph. Ang. 5-25 deg., UV: 70% D.O. 80% P.U.
2800-480	480VAC, Ph. Ang. 5-25 deg., UV: 70% D.O. 80% P.U.
2800-600	600VAC, Ph. Ang. 5-25 deg., UV: 70% D.O. 80% P.U.

PHASE BAND MONITOR

2850X	208/230/460 V, 5-60 deg. Range, 60 Hz
2850-1X	208/240/380/480 V, 5-45 deg. Range, 50/60 Hz

OVERFREQUENCY RELAYS

WOF-12-100110	120VAC, 100-110 Hz. Range
	SUFFIX "-1": 0.2% Max. Differential
	"-T": 0.5-20 Sec. Time Delay
	"-2T": 60 Second Time Delay
	"-S": High Shock
23-050X	120VAC, 50-60 Hz
23-060X	120VAC, 60-70 Hz
23-400X	120VAC, 400-450 Hz

UNDERFREQUENCY RELAYS

22-050X	120VAC, 50-60 Hz
22-060X	120VAC, 60-70 Hz
22-400X	120VAC, 400-450 Hz

FREQUENCY RELAYS (Over or Under)

25-050HX	120VAC, 40-50-60 Hz, 125VDC 3A Contacts
25-050SX	120VAC, 40-50-60 Hz, High Shock
25-050-1X	120VAC, 40-50-60 Hz, 2 N.C. Contacts
25-050-2X	120VAC, 40-50-60 Hz, 1.2 Sec. Time Delay
25-060HX	120VAC, 50-60-70 Hz, 125VDC 3A Contacts
25-060SX	120VAC, 50-60-70 Hz, High Shock
25-060-1X	120VAC, 50/60 Hz +/-10% on each Frequency
25-060-2X	120VAC, 50-60-70 Hz, 0.4 Hz Differential
25-060-3X	120VAC, 50-60-70 Hz, 2 N.C. Contacts
25-060-4X	120VAC, 50-60-70 Hz, 2 N.O. Contacts
25-060-5X	120VAC, 50-60-70 Hz, 2 N.O, 10A MIL-R-5757
25-060-7X	120VAC, EMD #9337150, Set 57.4 & 62.6 +/-0.6 Hz
25-060-8X	120VAC, 50-60-70 Hz, 1 Sec. T.D.
25-060-10X	120VAC, Spike Suppression
25-060-12X	104VAC, 50-60-70 Hz
25-060-14X	240VAC, 50-60-70 Hz
25-060-18X	120VAC, 50-60-70 Hz, 1 Sec. T.D., Suppression
25-060-19X	120VAC, 50-60-70 Hz, 0.5-10Sec. T.D., 12VDC Ctrl.
25-060-20X	120VAC, 50-60-70 Hz, 0.5-10Sec. T.D., 24VDC Ctrl.
25-100X	120VAC, 90-100-110 Hz
25-400X	120VAC, 350-400-450 Hz
25-400-2X	120VAC, 350-400-450 Hz, 220VAC 5A Contacts
25-400-5X	120VAC, 350-400-450 Hz, Suppression
25-025T-1HX	480VAC, 20-25-30 Hz, 0.5-20Sec T.D., 125VDC 3A Contacts
25-025T-2HX	120VAC, 20-25-30 Hz, 0.5-20Sec. T.D., 125VDC 3A Contacts
25-100T-1HX	480VAC, 90-100-110 Hz, 0.5-20Sec. T.D., 125VDC 3A Contacts
20-040-1X	100VAC, 40-50 Hz
20-040-2X	120VAC, 40-50 Hz, 1.5-2.0 Sec. T.D.

Additional Relays (Continued)

20-040-3X	120VAC, 40-50 Hz, 2 N.C. Contacts
20-040-4X	220VAC, 40-50 Hz.
20-050-HX	120VAC, 50-60 Hz, 125VDC 3A Contacts
20-050SX	120VAC, 50-60 Hz, High Shock, MIL-S-901C
20-050-1X	120VAC, 50-60 Hz, 0.2 Sec. T.D.
20-050-2X	120VAC, 45-66 Hz, U.L.
20-050-3X	120VAC, 50-60 Hz, 2000V PIV Diode
20-050-4X	120VAC, 50-60 Hz, 1 Sec. T.D., 0.5% Drift
20-050-8X	120VAC, 57-60 Hz, 0.2 Hz Diff., 240V Contacts, FAA
20-050-8PX	120VAC, Similar to 20-050-8X w/ Spike Suppression
20-050-9X	120VAC, 45-55 Hz
20-050-10X	120VAC, 50-60 Hz, Suppression
20-050-12X	120VAC, 50-60 Hz, 125VDC Contacts
20-050-13X	120VAC, 50-60 Hz, 2 Sec. T.D.
20-050-16X	150VAC, Similar to 20-050-10X except Voltage
20-050-19X	120VAC, Volt./Freq., 45-60 Hz, 85-120V
20-050-19PX	120VAC, Similar to 20-050-19X w/ Suppression
20-050-20X	120VAC, 50-60 Hz, 2 N.C. Contacts
20-050-21X	220VAC, 50-60 Hz
20-050-22X	120VAC, 50-60 Hz, 125VDC Contacts, Seismic
20-050-23X	240VAC, Similar to 20-050-19X except Voltage
20-050-23PX	240VAC, Similar to 20-050-23X w/Suppression
20-050-25X	104VAC, 50-60 Hz
20-050-26X	120VAC, 57-60 Hz, Supp., 0.2 Sec. T.D. on D.O.
20-050-27X	120VAC, Sim. to 20-050-26X, Operation Reversed
20-050-28X	120VAC, Sim. to 20-050-2X with Suppression
20-050-29X	120VAC, Sim. to 20-050-19X w/125VDC 2A Contacts
20-050-30X	120VAC, Sim. to 20-050-1X w/125VDC 2A Contacts
20-050-31X	200-480VAC, 50-60 Hz Range, 26VDC Control
20-050-32X	120VAC, Sim. to WUF-12-5060T, Operation Rev.
20-060-1X	120VAC, 60-70 Hz, 2000V Diode
20-060-2X	120VAC, 60-63 Hz, 0.2 Hz Diff., 240VAC Contacts
20-060-2PX	120VAC, Sim. to 20-060-2X w/Suppression
20-060-4X	120VAC, 65-77 Hz
20-060-5X	120VAC, Jumper, Set at 60 Hz +3% or 50 Hz +3%
20-060-6X	120VAC, 103-156V Range, 60-70 Hz, Set at 70 Hz
20-060-7X	120VAC, 60-63Hz, 0.2 Sec T.D. on P.U., Suppression
20-060-8X	120VAC, 60-70 Hz, Spike Suppression
20-060-9X	120VAC, 60-70 Hz, 0.25 Sec. Inverse T.D. on P.U.
20-350X	120VAC, 350-500Hz
20-350SX	120VAC, 350-400Hz, 2 N.C. 2A Contacts, Hi-Shock
20-350-2SX	115VAC, 350-400Hz, Hi-Shock
20-350-4X	120VAC, 300-400 Hz
20-400X	120VAC, 400-450 Hz
20-400SX	120VAC, 400-450 Hz, High Shock
20-400-2SX	115VAC, Hi-Shock
20-400-3X	120VAC, 400-450 Hz, 2 N.C. Contacts
20-400-4X	120VAC, 400-500 Hz

ADJUSTABLE DIFFERENTIAL

D20-040X	120VAC, 40-50 Hz
D20-050X	120VAC, 50-60 Hz
D20-050-2X	120VAC, P.U. 50-60 Hz, D.O. 40-50 Hz
D20-060X	120VAC, 60-70 Hz

VOLTAGE UNBALANCE RELAYS

1500X	120VAC, 3 Phase, 15% - 25% Adjustment
1510X	230VAC, 3 Phase, 15% - 25% Adjustment
1520X	380VAC, 3 Phase, 15% - 25% Adjustment
1530X	460VAC, 3 Phase, 15% - 25% Adjustment
1540X	575VAC, 3 Phase, 15% - 25% Adjustment
1550X	208VAC, 3 Phase, 15% - 25% Adjustment

SUFFIX "-2": N.C. Contacts (Example: 1500-2X)
"-3": 10% - 20% Adjustment
"-4": Transient Suppression
"-H": 125VDC 3A Contacts

Catalog 5-1773450-5
Revised 3-13

www.te.com

Dimensions are shown for reference purposes only. Specifications subject to change.

Dimensions are in millimeters unless otherwise specified.

USA: +1 800 522 6752
Asia Pacific: +86 0 400 820 6015
UK: +44 800 267 666

For additional support numbers please visit www.te.com

Engineering Notes

Catalog 5-1773450-5
Revised 3-13

www.te.com

Dimensions are shown for reference purposes only. Specifications subject to change.

Dimensions are in millimeters unless otherwise specified.

USA: +1 800 522 6752
Asia Pacific: +86 0 400 820 6015
UK: +44 800 267 666

For additional support numbers please visit www.te.com

Table of Contents

MDR Series 12-2, 12-3
2100 Series . . . . . .12-4 – 12-7
7000 Series . . . . . .12-8 – 12-14
E7000 Series . . . . . .12-15 – 12-20
EGP Series . . . . . .12-21 – 12-27
EML Series . . . . . .12-21 – 12-27
ETR Series . . . . . .12-21 – 12-27
GP Series . . . . . .12-28 – 12-30
ML Series 12-28, 12-29, 12-32
TR Series 12-28, 12-31, 12-32
VCA Series 12-33
VMA Series 12-34
SCB Series 12-35
SCC Series 12-35
SCE Series 12-36
SCF Series 12-37
SRC Series 12-38
SSC Series 12-39
SSF Series 12-40
SST Series 12-41
STA Series 12-42
VTM1 Series 12-43
VTM-1 Series 12-44
VTM2 Series 12-45
VTM3 Series 12-46
VTM4 Series 12-47
VTM7 Series 12-48
VTMA1 Series 12-49
VTMR1 Series 12-50

Catalog 5-1773450-5
Revised 3-13

www.te.com

Dimensions are shown for reference purposes only. Specifications subject to change.

Dimensions are in millimeters unless otherwise specified.

USA: +1 800 522 6752
Asia Pacific: +86 0 400 820 6015
UK: +44 800 267 666

For additional support numbers please visit www.te.com

MDR Series, 10 Amp Rotary Relay For Demanding Shock & Vibration Applications

Product Facts

- **AC and DC coils, latching and non-latching**
- **4PDT through 24PDT contact arrangements**
- **Designed to withstand high impact shock per MIL-S-901**

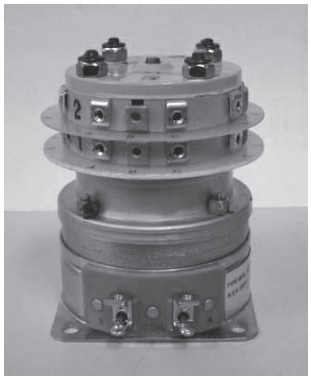

Small 8PDT

Medium 24PDT

Specifications

Contact Data

Arrangements — 4 Form C (4PDT) through 24 Form C (24 PDT).

Contact Ratings

Single Contacts	Two Contacts in Series
10 A, 115 VAC	3 A, 440 VAC
3 A, 28 VDC	15 A, 115 VAC
0.8 A, 125 VDC	1.5 A, 125 VDC

The above AC contact ratings are based on contact loads having a 50% power factor. The DC contact ratings are based on resistive loads.

Operate Data @ 77°F [25°C]

Type	Typ. Operate Time (ms)	Typ. Release Time (ms)
Small AC Non-Latching	5 to 12	5 to 18
Small DC Non-Latching	15 to 30	5 to 15
Small AC Latching	6 to 12	N/A
Small DC Latching	10 to 16	N/A
Medium AC Non-Latching	6 to 12	6 to 20
Medium DC Non-Latching	65 to 90	10 to 30
Medium AC Latching	50 (max.)	N/A
Medium DC Latching	30 to 80	N/A

Latching Two-Position Types — Except for the latching feature, MDR latching relays utilize the same general construction as non-latching types. They have two sets of coils and provide a latching two-position operation.

Contact Section

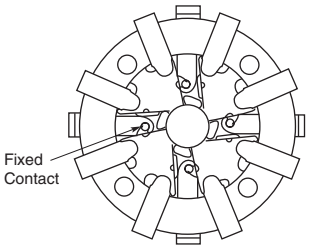

Contacts Shown With Coil 1-2 De-Energized and Coil 3-4 Energized.

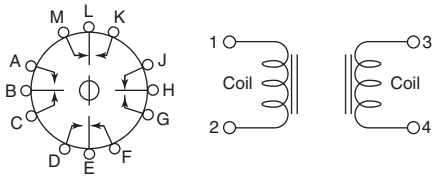

Coils Must be Energized Alternately, Not Simultaneously.

Environmental Data

Temperature Range —
Standard models — 0°F to +149°F [0°C to +65°C]
Special order models — 0°F to +194°F [0°C to +90°C]

Mechanical Data

Termination — #5-40 screw terminals supplied

Weight (Approx.) —
Small —
4 & 8PDT — 32 oz. [0.914 kg];
12PDT — 33 oz. [0.943 kg]
Medium —
16PDT — 72 oz. [2.04 kg];
24PDT — 74 oz. [2.10 kg]

Catalog 5-1773450-5
Revised 3-13

www.te.com

Dimensions are shown for reference purposes only. Specifications subject to change.

Dimensions are in millimeters unless otherwise specified.

USA: +1 800 522 6752
Asia Pacific: +86 0 400 820 6015
UK: +44 800 267 666

For additional support numbers please visit www.te.com

MDR Series, 10 Amp Rotary Relay
For Demanding Shock & Vibration Applications (Continued)

Ordering Information and Coil Characteristics — No models in this series are maintained in stock.

Type	Part Number	Contacts	Coil Voltage (60 Hz. for AC)	Coil Power* (Watts)	Breakdown (Volts RMS)
Small Non-Latching	MDR-131-1	4PDT	115 VAC	6.5	1,230
	MDR-131-2	4PDT	440 VAC	5.1	1,880
	MDR-135-1	4PDT	28 VDC	10.0	1,308
	MDR-137-8	4PDT	125 VDC	10.3	2,375
	MDR-134-1	8PDT	115 VAC	6.5	1,230
	MDR-134-2	8PDT	440 VAC	5.1	1,880
	MDR-136-1	8PDT	28 VDC	10.0	1,308
	MDR-138-8	8PDT	125 VDC	10.3	2,375
	MDR-163-1	12PDT	115 VAC	6.9	1,230
	MDR-163-2	12PDT	440 VAC	6.3	1,880
Medium Non-Latching	MDR-170-1	16PDT	115 VAC	17.0	1,230
	MDR-170-2	16PDT	440 VAC	17.0	1,880
	MDR-172-1	16PDT	28 VDC	18.7	1,308
	MDR-173-1	16PDT	125 VDC	16.0	2,375
	MDR-141-1	24PDT	115 VAC	17.0	1,230
	MDR-141-2	24PDT	440 VAC	17.0	1,880
	MDR-167-1	24PDT	28 VDC	18.7	1,308
	MDR-142-1	24PDT	125 VDC	16.0	2,375
Small Latching	MDR-67-2	4PDT	115 VAC	5.5	1,230
	MDR-4091	4PDT	440 VAC	3.0	1,880
	MDR-67-3	4PDT	28 VDC	21.8	1,308
	MDR-5060	4PDT	125 VDC	20.6	2,375
	MDR-4076	8PDT	115 VAC	5.5	1,230
	MDR-4092	8PDT	440 VAC	3.0	1,880
	MDR-5035	8PDT	28 VDC	21.8	1,308
	MDR-5061	8PDT	125 VDC	20.6	2,375
Medium Latching	MDR-6064	12PDT	115 VAC	12.0	1,230
	MDR-6065	12PDT	440 VAC	5.7	1,880
	MDR-7020	12PDT	28 VDC	8.8	1,308
	MDR-7035	12PDT	125 VDC	10.4	2,375
	MDR-66-4	16PDT	115 VAC	12.0	1,230
	MDR-6066	16PDT	440 VAC	5.7	1,880
	MDR-7025	16PDT	28 VDC	8.8	1,308
	MDR-7036	16PDT	125 VDC	10.4	2,375

*Actual Wattmeter readings.

Note: All values are for reference, specific values may be different and subject to environmental factors such as temperature, humidity, pressure or variations in voltage.

Outline Dimensions

Tolerances: Decimals ± .010 [±.25] Unless Otherwise Specified.

Small Models

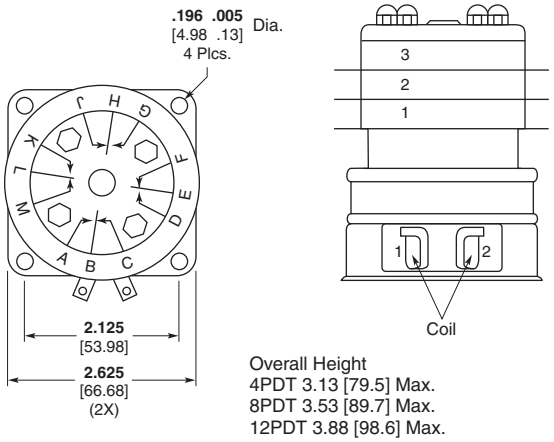

Overall Height
4PDT 3.13 [79.5] Max.
8PDT 3.53 [89.7] Max.
12PDT 3.88 [98.6] Max.

Coil and Contact Terminal Screws #5-40 Supplied.

Medium Models

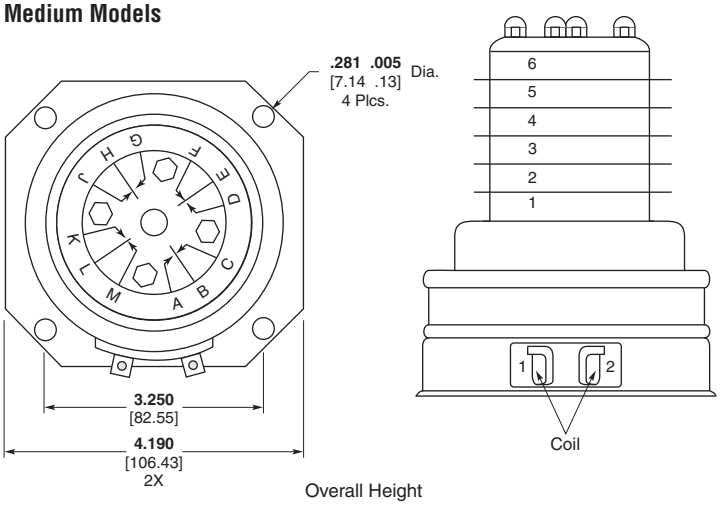

Overall Height
12PDT 4.63 [117.6] Max.
16PDT 5.00 [127.0] Max.
24PDT 5.75 [146.1] Max.

Coil and Contact Terminal Screws #5-40 Supplied.

Catalog 5-1773450-5
Revised 3-13

www.te.com

Dimensions are shown for reference purposes only. Specifications subject to change.

Dimensions are in millimeters unless otherwise specified.

USA: +1 800 522 6752
Asia Pacific: +86 0 400 820 6015
UK: +44 800 267 666

For additional support numbers please visit www.te.com

AGASTAT 2100 Series, Miniature Electropneumatic Timing Relay

Product Facts

- **High Repeat Accuracy over voltage and temperature extremes**
- **Hermetically sealed units are designed for high shock and vibration applications**
- **Instant recycling — easy linear adjustment**
- **Exclusive Dial Head adjustment — no needle valves**
- **Delay ranges from milliseconds to 3 minutes**
- **DPDT contacts**

Design & Construction

Sealed patented timing head — circulates air under controlled pressure through a variable orifice to provide adjustable timing. Circular-path Dial Head principle replaces traditional needle valve.

Snap-action switch assembly — provides sustained contact pressure during timing cycles. Specially designed over center mechanism assures flutter-free load transfer after extended delay periods.

Precision-wound solenoid assembly — supplies the basic motive force when the control circuit is closed.

These assemblies are mounted in a rigid self-supporting framework within a steel enclosure. This rugged construction assures permanent alignment of all operating members, the key to this unit's long trouble-free operation.

Users should thoroughly review the technical data before selecting a product part number. It is recommended that users also seek out the pertinent approvals files of the agencies/laboratories and review them to ensure the product meets the requirements for a given application.

Operation

Series 2112 (On-Delay) — Applying rated voltage to the solenoid coil starts the preset time delay. At the end of the delay period the NC contacts break and the NO contacts make. Contacts remain in this position until the coil is de-energized, when the switch instantaneously returns to its original position. De-energizing the coil, either during or after the delay period, will immediately (within 25 msec.) recycle the unit. It will then provide another full delay period on re-energization.

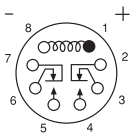

Series 2112

Series 2122 (Off-Delay) — Applying rated voltage to the coil for at least 75 msec. (for accurate timing) will instantaneously transfer the switch, breaking the NC contacts and making the NO contacts. Contacts remain in this position as long as the coil is energized. The preset time delay period begins as soon as the coil is de-energized, at the end of which the switch returns to its original position. **No power is required during the timing period.** Re-energizing the coil, either during or after the delay period, will immediately start a new cycle with full delay period.

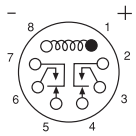

Series 2122

Operation (Listed values at nom. voltage, 25°C unless noted)

Operating Mode —

2112 — On-delay (delay on pull-in);
2122 — Off-delay (delay on drop-out)

Timing Adjustment — All standard models offer easy linear adjustment over one of nine timing ranges listed below. For applications requiring frequent readjustment, the external knob model is recommended. For tamper-proof installation or where readjustment is infrequent, the internal key model may be preferred. This model requires removal of the cover plate for timing adjustment. Hermetically sealed models provide a slotted adjusting screw under the cap nut on the top cover.

Timing Ranges —

Code	Range
A	.03 to .1 sec.
B	.1 to .3 sec.
C	.15 to 1.0 sec.
D	.375 to 3.0 sec.
E	.75 to 10.0 sec.
F	1.0 to 30.0 sec.
G	2.0 to 60.0 sec.
H	5.0 to 120.0 sec.
J	5.0 to 180.0 sec.
K	1.5 to 30.0 cycles
L	3.0 to 120.0 cycles

Repeat Accuracy — NORMAL VERTICAL POSITION
±5% at 25°C; ±7% at 85°C; ±8% at -55°C.
The average time between -55°C and 85°C will be within ±20% of the average @ 25°C with a proportionally reduced effect at lesser extremes.

In extremely short delay settings an additional 8 msec. variation may result on AC models due to "half cycle" alternating current effect.

Setting Tolerance — Factory time setting, when specified, subject to additional +5% tolerance.

Position Sensitivity —
HORIZONTAL POSITION — Approximately 5% increase from the initial time in the vertical position.
INVERTED POSITION — Approximately 10% increase from the initial time in the vertical position.

Reset Time — 2112 Series: 25 msec.; 2122 Series: 75 msec.

Relay Release Time — 25 msec. (2112 Series)

Relay Operate Time — 75 msec. (2122 Series)

Operating Voltage — Coil Data

Code	Nominal Operating Voltage	Resistance Ohms ±10%
M	12VDC	30
N	28VDC	131
P	48VDC	500
R	110VDC	3200
S	120V 60 Hz	190 (2112 Series)
S	120V 60Hz	285 (2122 Series)
T	240V 60Hz	765
U	115V 400Hz	2600
Y	125VDC	3380

Transients — Insensitive to transients of ±1500 VAC for 10 milliseconds

Dielectric — 1000V RMS @ 60Hz between non-connected terminals.

Contact Rating (DPDT Contacts) —

	30V DC	110V DC	120V 60Hz	120V 400Hz	240V 60Hz
Inductive (Amps)	2	.75	3	2	1.5
Resistive (Amps)	10	1	10	10	5

Based on 100,000 operations electrical, 1,000,000 mechanical. Inductive and capacitive load should not have inrush currents that exceed five times normal operating load.

Ambient Temperature Range — -55°C to +85°C

Weight — Maximum, any unit - 17 ozs.

Mounting/Terminals — Chassis mounting tabs, octal plugs and external (-4) or internal (-5) adjustment. Panel mounting back plate, internal adjustment, and solder hook terminals (-9).

-4

-5

-9

These are minimum standards; where more severe environmental conditions must be met, please consult the factory.

Catalog 5-1773450-5
Revised 3-13

www.te.com

Dimensions are shown for reference purposes only. Specifications subject to change.

Dimensions are in millimeters unless otherwise specified.

USA: +1 800 522 6752
Asia Pacific: +86 0 400 820 6015
UK: +44 800 267 666

For additional support numbers please visit www.te.com

AGASTAT 2100 Series, Miniature Electropneumatic Timing Relay (Continued)

Outline Dimensions for Industrial Models (Dimensions in inches. Multiply by 25.4 to obtain millimeters.)

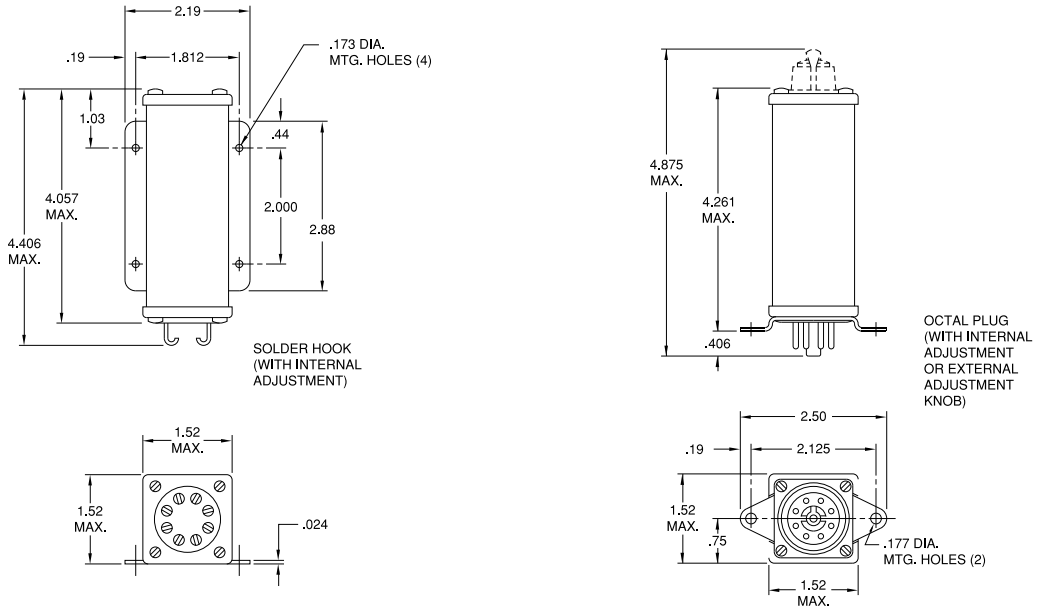

Ordering Information for Industrial Models

Typical Part No. ➤	21	1	2	D	4	N	B

1. Basic Series:
21 = 2100 Miniature electropneumatic timing relay

2. Operation:
1 = On-delay 2 = Off-delay

3. Contact Arrangement:
2 = DPDT (2 form C)

4. Operating Voltage:
A = AC D = DC

5. Physical Characteristics:

Code	Enclosure	Adjustment	Connector	Mounting
4 =	Unsealed	External Knob	Octal Plug	Chassis Mount
5 =	Unsealed	Internal Key	Octal Plug	Chassis Mount
9 =	Unsealed	Internal Key	Solder Hook	Panel Mount Plate

6. Coil Voltage:
M = 12VDC N = 28VDC P = 48VDC R = 110VDC Y = 125VDC
S = 120VAC, 50/60 Hz. T = 240VAC, 60 Hz.

7. Timing Range:
A = .03 to .1 sec. C = .15 to 1.0 sec. E = .75 to 10.0 sec. H = 5.0 to 120.0 sec. K = 1.5 to 30.0 cycles
B = .1 to .3 sec. D = .375 to 3.0 sec. F = 1.0 to 30.0 sec. J = 5.0 to 180.0 sec. L = 3.0 to 120.0 cycles

Our authorized distributors are more likely to maintain the following items in stock for immediate delivery.

None at present.

Catalog 5-1773450-5
Revised 3-13

www.te.com

Dimensions are shown for reference purposes only. Specifications subject to change.

Dimensions are in millimeters unless otherwise specified.

USA: +1 800 522 6752
Asia Pacific: +86 0 400 820 6015
UK: +44 800 267 666

For additional support numbers please visit www.te.com

AGASTAT 2100 Series, Miniature Electropneumatic Timing Relay (Continued)

Specifications for Hermetically Sealed Models

Dielectric — Withstands 1,000 Volts RMS at 60 Hz between non-connected terminals.

Other — AGASTAT Miniature Timing Relays also conform to applicable requirements covering:

Moisture	Ozone
Humidity	Sunshine
Sand/Dust	Acoustic Noise
Salt Spray	Prolonged Storage

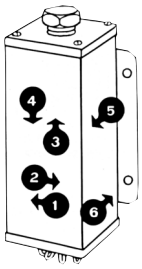

Outline Dimensions for Hermetically Sealed Models (In inches. Multiply by 25.4 for millimeters.)

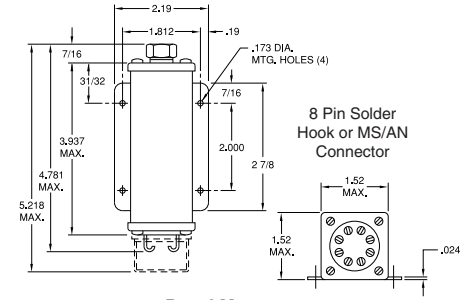

Panel Mount
-H1, -H3

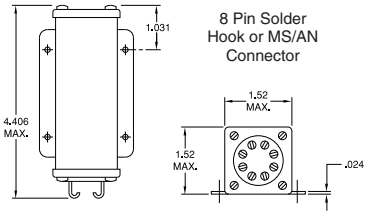

Panel Mount
-9

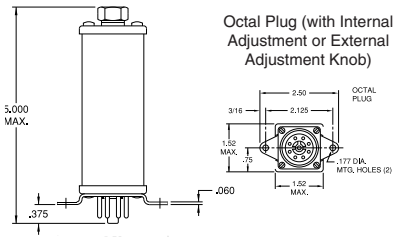

Chassis Mount
-H2

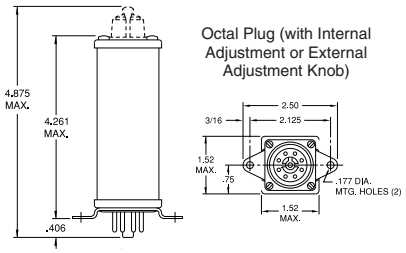

Chassis Mount
-4, -5

AGASTAT 2100 Series, Miniature Electropneumatic Timing Relay (Continued)

Ordering Information for Hermetically Sealed & Unsealed Models

Typical Part No. ➤	21	1	2	D	H1	N	B

1. Basic Series:
21 = 2100 Miniature electropneumatic timing relay

2. Operation:
1 = On-delay 2 = Off-delay

3. Contact Arrangement:
2 = DPDT (2 form C)

4. Operating Voltage:
A = AC D = DC

5. Physical Characteristics:

Code	Enclosure	Adjustment	Connector	Mounting
H1 =	Hermetically Sealed	External Screw	Solder Hook	Panel Mount Plate
H2 =	Hermetically Sealed	External Screw	Octal Plug	Chassis Mount
H3 =	Hermetically Sealed	External Screw	“AN” Connector	Panel Mount Plate
4 =	Unsealed	External Knob	Octal Plug	Chassis Mount
5 =	Unsealed	Internal Key	Octal Plug	Chassis Mount
9 =	Unsealed	Internal Key	Solder Hook	Panel Mount Plate

6. Coil Voltage:
M = 12VDC N = 28VDC P = 48VDC R = 110VDC Y = 125VDC
S = 120VAC, 50/60 Hz. T = 240VAC, 60 Hz. U = 115VAC, 400 Hz.

7. Timing Range:
A = .03 to .1 sec. C = .15 to 1.0 sec. E = .75 to 10.0 sec. H = 5.0 to 120.0 sec. K = 1.5 to 30.0 cycles
B = .1 to .3 sec. D = .375 to 3.0 sec. F = 1.0 to 30.0 sec. J = 5.0 to 180.0 sec. L = 3.0 to 120.0 cycles

Our authorized distributors are more likely to maintain the following items in stock for immediate delivery.

None at present.

Catalog 5-1773450-5
Revised 3-13

www.te.com

Dimensions are shown for reference purposes only. Specifications subject to change.

Dimensions are in millimeters unless otherwise specified.

USA: +1 800 522 6752
Asia Pacific: +86 0 400 820 6015
UK: +44 800 267 666

For additional support numbers please visit www.te.com

AGASTAT 7000 Series, Industrial Electropneumatic Timing Relay

Product Facts

- **Available in on-delay, true off-delay, and on/off-delay**
- **Timing from 0.1 seconds to 60 minutes, in linear increments**
- **Oversize adjustment knobs, serrated with high-resolution markings visible from all angles makes the timer easy to set timers**
- **Inherent transient immunity**
- **Standard voltages from 6-550VAC and 12-550VDC (special voltages available)**
- **Available in 2-pole or 4-pole models**
- **Numerous enclosure options — explosion proof, dust tight, watertight, hermetically-sealed, NEMA 1**
- **Auxiliary timed and instantaneous switches can be added for greater switching flexibility**
- **Many mounting options — Surface mount, Panel mount, Octal plug-in mounting**
- **Options: quick-connect terminals, dial stops, and transient protection module**
- **Easy-to-reach screw terminals, all on the face of the unit, clearly identified**
- **Modular assembly — timing head, coil assembly and switchblock are all individual modules, with switches field-replaceable**
- **File E15631, File LR29186**

Design & Construction

There are three main components of Series 7000 Timing Relays:

Timing Head circulates air through a variable length to provide linearly adjustable timing. Patented design provides easy adjustment and long service life under severe operating conditions.

Precision-Wound Potted Coil Total sealing without external leads eliminates moisture problems, gives maximum insulation value.

Snap-Action Switch Assembly — custom-designed over-center mechanism provides snap action. Standard switches are DPDT arrangement.

Each of these subassemblies forms self-contained modules assembled at the factory with the other two to afford a wide choice of operating types, coil voltages, and timing ranges.

The squared design with front terminals and rear mounting permits the grouping of Series 7000 units side-by-side in minimum panel space. Auxiliary switches may be added in the base of the unit, without affecting the overall width or depth.

Operation

Two basic operating types are available.

"On-Delay" models provide a delay period on energization, at the end of which the switch transfers the load from one set of contacts to another. De-energizing the unit during the delay period immediately recycles the unit, readying it for another full delay period on re-energization.

In "Off-Delay" models the switch transfers the load immediately upon energization and the delay period does not begin until the unit is de-energized. At the end of the delay period the switch returns to its original position. Re-energizing the unit during the delay period immediately resets the timing, readying it for another full delay period on de-energization. No power is required during the timing period, providing a true off delay.

In addition to these basic operating types, "Double-Head" models offer sequential delays on pull-in and drop-out in one unit. With the addition of auxiliary switches the basic models provide two-step timing.

Note: Seismic & radiation tested E7000 models are available. Consult factory for detailed information.

On-delay model 7012 (delay on pickup)

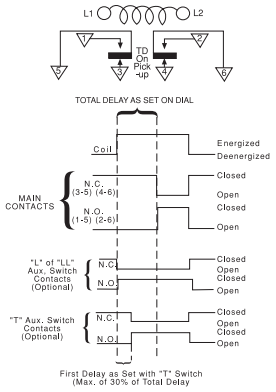

Applying voltage to the coil (L1-L2) for at least 50 msec starts a time delay lasting for the preset time. During this period the normally closed contacts (3-5 and 4-6) remain closed. At the end of the delay period the normally closed contacts break and the normally open contacts (1-5 and 2-6) make. The contacts remain in this transferred position until the coil is deenergized, at which time the switch returns to its original position.

De-energizing the coil, either during or after the delay period, will recycle the unit within 50 msec.

It will then provide a full delay period upon re-energization, regardless of how often the coil voltage is interrupted before the unit has been permitted to "time-out" to its full delay setting.

Off-delay model 7022 (delay on dropout)

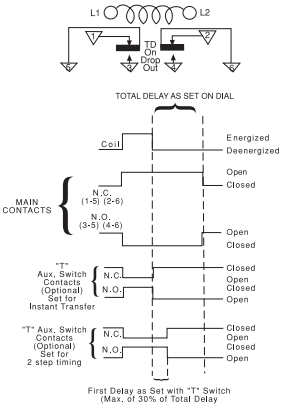

Applying voltage to the coil (for at least 50 msec) will transfer the switch, breaking the normally closed contacts (1-5 and 2-6), and making the normally open contacts (3-5 and 4-6). Contacts remain in this transferred position as long as the coil is energized. The time delay begins immediately upon de-energization. At the end of the delay period the switch returns to its normal position.

Re-energizing the coil during the delay period will immediately return the timing mechanism to a point where it will provide a full delay period upon subsequent de-energization. The switch remains in the transferred position.

Note: 7032 types and certain models with accessories are not agency approved.

Users should thoroughly review the technical data before selecting a product part number. It is recommended that users also seek out the pertinent approvals files of the agencies/laboratories and review them to ensure the product meets the requirements for a given application.

Consult factory for ordering information.

Catalog 5-1773450-5
Revised 3-13

www.te.com

Dimensions are shown for reference purposes only. Specifications subject to change.

Dimensions are in millimeters unless otherwise specified.

USA: +1 800 522 6752
Asia Pacific: +86 0 400 820 6015
UK: +44 800 267 666

For additional support numbers please visit www.te.com

AGASTAT 7000 Series, Industrial Electropneumatic Timing Relay (Continued)

Auxiliary Switch Options

To increase the versatility of the basic timer models, auxiliary switches may be added to either on-delay or off-delay types. They switch additional circuits, provide two-step timing action, or furnish electrical interlock for sustained coil energization from a momentary impulse, depending on the type selected and its adjustment. They are installed at the factory. All auxiliary switches are SPDT with UL listings of 10A @ 125, 250, or 480 VAC. A maximum of one Code T or two Code L auxiliary switches may be added to each relay. The L or LL switch is available with on-delay relays only. The T switch is available with both the on-delay and off-delay relays.

Auxiliary Switch Options for On-Delay

Instant Transfer (Auxiliary Switch Code L, maximum of 2 per relay.)

1. Energizing coil begins time delay and transfers auxiliary switch.
2. Main switch transfers after total preset delay.
3. De-energizing coil resets both switches instantly.

Auxiliary switch is nonadjustable.

Two-Step Timing (Auxiliary Switch Code T, maximum of 1 per relay.)

1. Energizing coil begins time delay.
2. After first delay auxiliary switch transfers.
3. Main switch transfers after total preset delay.
4. De-energizing coil resets both switches instantly. First delay is independently adjustable, up to 30% of overall delay. (Recommended maximum 100 seconds.)

Auxiliary Switch Options for Off-Delay

In these models the same auxiliary switch provides either two-step timing or instant transfer action, depending on the adjustment of the actuator.

Two-Step Timing (Auxiliary Switch Code T, maximum of 1 per relay.)

1. Energizing coil transfers main and auxiliary switches instantly.
2. De-energizing coil begins time delay.
3. After first delay auxiliary switch transfers.
4. Main switch transfers after total preset delay. First delay is independently adjustable, up to 30% of overall delay. (Recommended maximum 100 seconds.)

Instant Transfer (Auxiliary Switch Code L, maximum of 1 per relay.)

1. Energizing coil transfers main and auxiliary switches instantly.
2. De-energizing coil resets auxiliary switch and begins time delay.
3. Main switch transfers after total preset delay.

Auxiliary switch is factory adjusted to give instant transfer operation. Two-step timing may be set at the factory to customer specification up to a 3:2 ratio.

On-delay, Off-delay Model 7032 (Double Head)

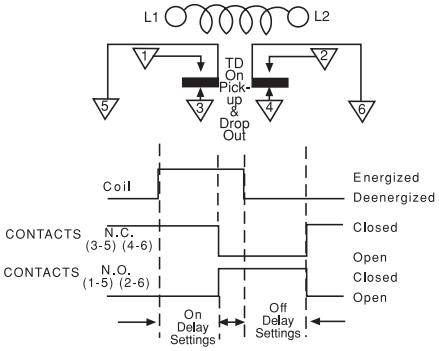

The Double Head model provides delayed switch transfer on energization of its coil, and delayed resetting upon coil de-energization. Each delay period is independently adjustable.

In new circuit designs or the improvement of existing controls now using two or more conventional timers, the Double Head unit offers distinct advantages.

Its compact design saves panel space, while the simplified wiring reduces costly interconnection.

On-delay Model 7014, Off-delay Model 7024

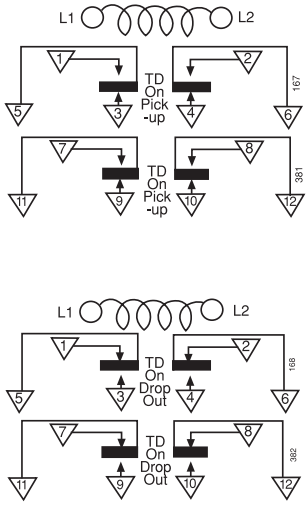

With the addition of an extra switch block at the bottom of the basic unit, this version of the Series 7000 offers four pole switch capacity with simultaneous timing or two-step timing. The two-step operation is achieved by factory adjustment to your specifications.

For two-step operation, a maximum timing ratio between upper and lower switches of 3:2 is recommended. Once adjusted at the factory, this ratio remains constant regardless of changes in dial settings. (Ex: If upper switch transfer is set on dial at 60 sec., minimum time on lower switch should be 40 sec.)

This Series 7000 unit offers many of the performance features found in basic models — voltage ranges, timing and switch capacities.

Four pole models add approximately 1-1/4" to the maximum height of the basic model, approximately 1/8" to the depth. They are designed for vertical operation only.

Catalog 5-1773450-5
Revised 3-13

www.te.com

Dimensions are shown for reference purposes only. Specifications subject to change.

Dimensions are in millimeters unless otherwise specified.

USA: +1 800 522 6752
Asia Pacific: +86 0 400 820 6015
UK: +44 800 267 666

For additional support numbers please visit www.te.com

AGASTAT 7000 Series, Industrial Electropneumatic Timing Relay (Continued)

Surge/Transient Protection Option

Transient Suppressor Option "V"

Product Facts

- **Protect electronic control circuits from voltage transients generated by the timer coil**
- **Fast response to the rapidly rising back E.M.F.**
- **High performance clamping voltage characteristics**
- **UL recognized, (except varistor and coil together).**
- **Timer NOT polarity sensitive**

The Surge/Transient Protection Option protects electronic control circuits from transients and surges which are generated when the timer coil is activated. The device is not polarity sensitive and permits the user to initiate, delay, sequence and program equipment actions over a wide range of applications under the most severe operating conditions.

The varistor will not affect the operating characteristics of the 7000 Timer. The varistor has bilateral and symmetrical voltage and current characteristics.

Timing Specifications (All values shown are at nominal voltage and 25°C unless otherwise specified)

Operating Modes —
Model 7012/7014 — On-delay (delay on pick-up).
Model 7022/7024 — Off-delay (delay on drop-out).
Model 7032 — On-delay, off-delay (double head).

Timing Adjustment — Timing is set by simply turning the dial to the desired time value. In the zone of approximately 25° separating the high and low end of timing ranges A,D,E, and K, instantaneous operation (no time delay) will occur. All other ranges produce an infinite time delay when the dial is set in this zone.

Models 7014 and 7032 are available with letter dials only. The upper end of the time ranges in these models may be twice the values shown.

Linear Timing Ranges —

Code	Models 7012, 7022, 7024	Models 7014, 7032
A	.1 to 1 Sec.	.2 to 2 Sec.
B	.5 to 5 Sec.	.7 to 7 Sec.
C	1.5 to 15 Sec	2 to 20 Sec.
D	5 to 50 Sec.	10 to 100 Sec.
E	20 to 200 Sec.	30 to 300 Sec.
F	1 to 10 Min.	1.5 to 15 Min.
H	3 to 30 Min.	3 to 30 Min.
I	6 to 60 Min.	Not Avail.
J	3 to 120 Cyc.	Not Avail.
K	1 to 300 Sec.	Not Avail.

Repeat Accuracy —

For delays of 200 seconds or less:	7012*, 7022, 7024:	±5%
	7014*:	±10%
	7032:	±15%
For delays greater than 200 seconds:	7012*, 7022, 7014*, 7024:	±10%
	7032:	±15%

* The first time delay afforded by Model 7012 with H (3 to 30 min.) and I (6 to 60 min.) time ranges or Model 7014 with H time range will be approx. 15% longer than subsequent delays due to coil temperature rise.

Reset Time — 50 msec. (except model 7032)

Relay Release Time — 50 msec. for on-delay models (7012/7014)

Relay Operate Time — 50 msec. for off-delay models (7022/7024)

Operating Voltage Coil Data (for DPDT)

Coil Part #	Code Letter	Rated Voltage	Operating* Voltage Range @ 60Hz	Rated Voltage	Operating Voltage Range @50Hz
7000	A	120	102-132	110	93.5-121
	B	240	204-264	220	187-242
	C	480	408-528		
	D	550	468-605		
	E	24	20.5-26.5		
AC	F			127	108-140
	G			240	204-264
	H	12	10.2-13.2		
	I	6	5.1-6.6		
	J	208	178-229		
	K		Dual Voltage Coil (Combines A&B)		
	L		Special AC Coils (L1, L2, etc.)		
7010	M	28	22.4-30.8		
	N	48	38.4-52.8		
	O	24	19.2-26.4		
	P	125	100-137.5		
	Q	12	9.6-13.2		
	R	60	48-66		
DC	S	250	200-275		
	T	550	440-605		
	U	16	12.8-17.6		
	V	32	25.8-35.2		
	W	96	76.8-105.6		
	Y	6	4.8-6.6		
	Z	220	176-242		
	X		Special DC Coils (X1, X2, etc.)		

*Four pole Models: Operational voltage range 90% to 110% for AC units; 85% to 110% for DC units.

See next page for more coil data.

Catalog 5-1773450-5
Revised 3-13

www.te.com

Dimensions are shown for reference purposes only. Specifications subject to change.

Dimensions are in millimeters unless otherwise specified.

USA: +1 800 522 6752
Asia Pacific: +86 0 400 820 6015
UK: +44 800 267 666

For additional support numbers please visit www.te.com

AGASTAT 7000 Series, Industrial Electropneumatic Timing Relay (Continued)

Timing Specifications (All values shown are at nominal voltage and 25°C unless otherwise specified)

Minimum operating voltages are based on vertically mounted 7012 units. 7012 horizontally mounted or 7022 vertically or horizontally mounted units will operate satisfactorily at minimum voltages approximately 5% lower than those listed.

AC units drop out at approximately 50% of rated voltage. DC units drop out at approximately 10% of rated voltage.

All units may be operated on intermittent duty cycles at voltages 10% above the listed maximums (intermittent duty - maximum 50% duty cycle and 30 minutes "on" time.)

Surge/Transient Protection Option Characteristics (DC Timers Only)

Coil Voltage Nominal (DC)	Max Excess Energy Capacity (Joule)	Max De-energization Transient Voltage
12 V	0.4 J	48 V
24 V	1.8 J	93 V
28 V	1.8 J	93 V
32 V	2.5 J	135 V
48 V	3.57 J	145 V
60 V	6 J	250 V
96 V	10 J	340 V
110 V	10 J	340 V
125 V	10 J	340 V
220 V	17 J	366 V
250 V	17 J	366 V

Surge Life —
Applied 100,000 times continuously with the interval of 10 seconds at room temperature. Below 68 VAC: 12A; Above 68 VAC: 35A

Temperature Range —
Operating — -22°F to +167°F (-30°C to + 75°C)
Storage — -40°F to +167°F (-40°C to +75°C)

Output/Life Contact Ratings — Contact Capacity in Amps (Resistive Load)

Contact Voltage	Min. 100,000 Operations	Min. 1,000,000 Operations
30 VDC	15.0	7.0
110 VDC	1.0	0.5
120 V 60Hz	20.0	15.0
240 V 60Hz	20.0	15.0
480 V 60Hz	12.0	10.0

10 Amps Resistive, 240 VAC

1/4 Horsepower, 120 VAC/240VAC (per pole)

15 Amps 30 VDC (per pole)

5 Amps, General Purpose, 600VAC (per pole)

Dielectric — Withstands 1500 volts RMS 60Hz between terminals and ground. 1,000 volts RMS 60 Hz between non-connected terminals. For dielectric specification on hermetically sealed models consult factory.

Insulation Resistance — 500 Megohms with 500VDC applied.

Temperature Range —
Operating — -20°F to +165°F (-29°C to 74°C)
Storage — -67°F to +165°F (-55°C to 74°C)

Temperature Variation — Using a fixed time delay which was set and measured when the ambient temperature was 77°F (25°C), the maximum observed shift in the average of three consecutive time delays was -20% at -20°F (-29°C) and +20% at 165°F (74°C).

Mounting/Terminals — Normal mounting of the basic unit is in a vertical position, from the back of the panel. **All units are tested for vertical operation.** Basic models (7012, 7022) may also be horizontally mounted, and will be adjusted accordingly **when Accessory Y1 is specified in your order.**

Standard screw terminals (8-32 truss head screws supplied) are located on the front of the unit, with permanent schematic markings. Barrier isolation is designed to accommodate spade or ring tongue terminals, with spacing to meet all industrial control specifications.

The basic Series 7000 may also be panel mounted with the addition of a panel mount kit, X option, that includes all necessary hardware and faceplate. This offers the convenience of "out-front" adjustment, with large dial skirt knob. The faceplate and knob blend with advanced equipment and console designs, while the body of the unit and its wiring are protected behind the panel.

Other mounting options include plug-in styles and special configurations to meet unusual installation requirements. Contact factory for details.

Power Consumption — Approximately 8 watts power at rated voltage .

Approximate Weights —

Models 7012, 7022 . . . . . 2 lbs. 4 ozs.
7014, 7024 . . . . . 2 lbs. 10 ozs.
7032 . . . . . 3 lbs. 5 ozs.

Weight may vary slightly with coil voltage.

Catalog 5-1773450-5
Revised 3-13

www.te.com

Dimensions are shown for reference purposes only. Specifications subject to change.

Dimensions are in millimeters unless otherwise specified.

USA: +1 800 522 6752
Asia Pacific: +86 0 400 820 6015
UK: +44 800 267 666

For additional support numbers please visit www.te.com

AGASTAT 7000 Series, Industrial Electropneumatic Timing Relay (Continued)

Outline Dimensions (Dimensions in inches)

Models 7012, 7022

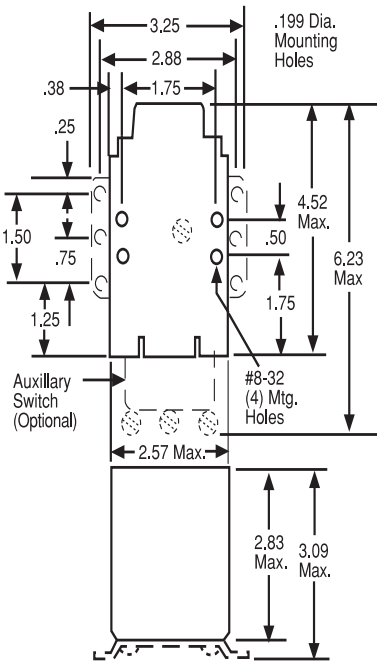

Models 7014, 7024

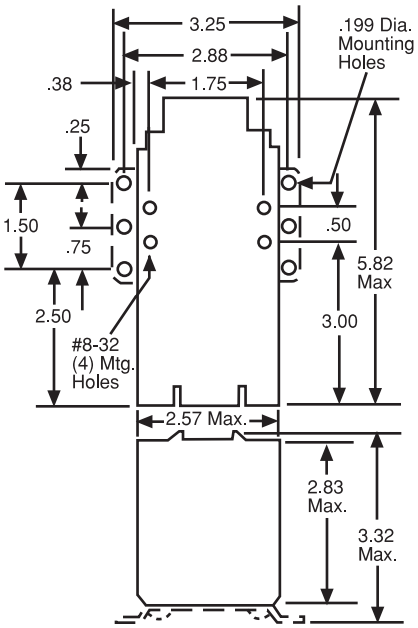

Model 7032

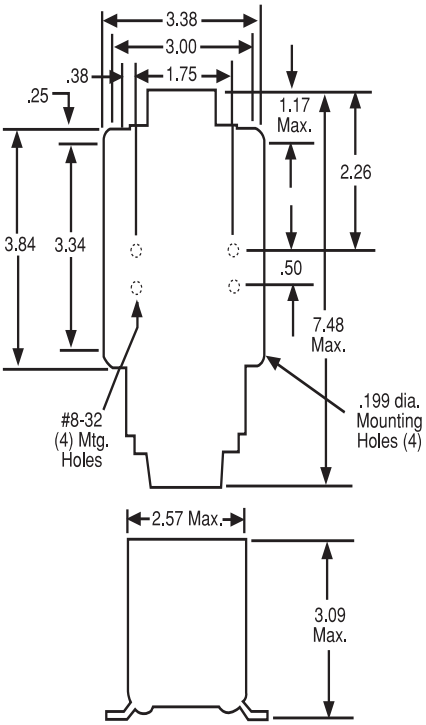

Panel Mount Option "X"

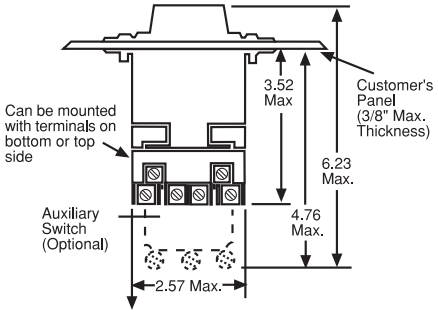

Surge/Transient Protection Option

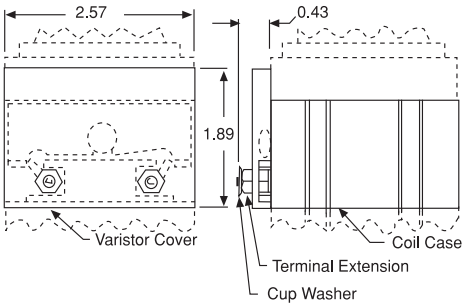

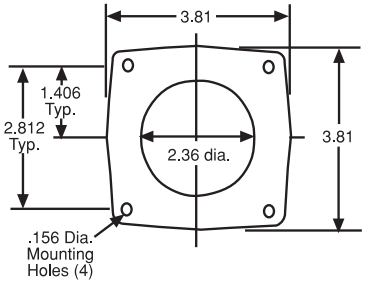

Catalog 5-1773450-5
Revised 3-13

www.te.com

Dimensions are shown for reference purposes only. Specifications subject to change.

Dimensions are in millimeters unless otherwise specified.

USA: +1 800 522 6752
Asia Pacific: +86 0 400 820 6015
UK: +44 800 267 666

For additional support numbers please visit www.te.com

AGASTAT 7000 Series, Industrial Electropneumatic Timing Relay (Continued)

Ordering Information

Typical Part No. ➤	70	1	2	A	D	GZ

1. Basic Series:
70 = 7000 series electropneumatic timing relay

2. Operation:
1 = On-delay
2 = Off-delay
3 = On-delay, off-delay (double head)

3. Contact Arrangement:
2 = 2PDT (2 form C)
**4 = 4PDT (4 form C)

4. Coil Voltage:

AC Coils
A = 120VAC, 60 Hz.; 110VAC, 50Hz.
B = 240VAC, 60 Hz.; 220VAC, 50Hz.
C = 480VAC, 60 Hz.
D = 550VAC, 60 Hz.
E = 24VAC, 60 Hz.
F = 127VAC, 50 Hz.
G = 240VAC, 50Hz.
H = 12VAC, 60 Hz.
K = Dual voltage (combines A & B)
L = Special AC coils (L1, L2, etc.)

DC Coils
M = 28VDC
N = 48VDC
O = 24VDC
P = 125VDC
Q = 12VDC
R = 60VDC
S = 250VDC
T = 550VDC
U = 16VDC
V = 32VDC
W = 96VDC
Y = 6VDC
Z = 220VDC
X = Special DC coils (X1, X2, etc.)

5. Timing Range:

Models 7012, 7022 & 7024
A = .1 to 1 sec.
B = .5 to 5 sec.
C = 1.5 to 15 sec.
D = 5 to 50 sec.
E = 20 to 200 sec.
F = 1 to 10 min.
H = 3 to 30 min.
I = 6 to 60 min.
J = 3 to 120 cyc.
K = 1 to 300 sec.

†Models 7014 & 7032
For model 7032 specify separate time range code for each head. Example: AB. Any two ranges may be selected.
A = .2 to 2 sec.
B = .7 to 7 sec.
C = 2 to 20 sec.
D = 10 to 100 sec.
E = 30 to 300 sec.
F = 1.5 to 15 min.
H = 3 to 30 min.

6. Options:
A1 = Single quick-connect terminals (note 4).
A2 = Double quick-connect terminals (note 4).
B = Plug-in connectors (note 4).
GZ = Enclosure with bottom knockouts (note 1).
H2 = Hermetically sealed enclosure, 8 pin solder (notes 1 & 4).
H3 = Hermetically sealed enclosure, 8 pin octal (notes 1 & 4).
H4 = Hermetically sealed enclosure, 8 screw terminal block (notes 1 & 4).
*H6 = Hermetically sealed enclosure, 11 pin solder (notes 1 & 4).
*H7 = Hermetically sealed enclosure, 11 pin octal (notes 1 & 4).
*H8 = Hermetically sealed enclosure, 11 screw terminal block (notes 1 & 4).
I1 = Tamper-proof Cap, opaque black (Cannot be combined with Option X).
I2 = Tamper-proof Cap, transparent (Cannot be combined with Option X).
L = Auxiliary Switch, instant transfer. 7012 only (notes 2 & 6).
LL = Two Aux. Switches, instant transfer. On Model 7014 Factory Installed Only. (notes 2 & 6)
M = Dust-tight Gasketing (notes 4 & 5).
P = Octal Plug Adapter. Can be combined only with options I1,I2. M, S, X, or Y1. (note 4).
S = Dial Stops.
T = Auxiliary Switch, two-step timing (notes 2 & 6).
V = Transient/Surge Protection (for DC coil voltage only).
X = Panelmount includes hardware and adjustment for horizontal operation (note 4)
Y1 = Horizontal testing, for horizontal operation without panel mounting (note 4).
Y2 = Horizontal testing, with Compensating Spring for vertical operation (note 4).

Notes:
1. Cannot be combined with B, P or X Options
2. Cannot be combined with B, P or Y2 Options
3. Cannot be combined with GZ, H, I1, I2, K, W or Y1 Options
4. Not Avail. on 4-Pole Models
5. Not Available with L, T or LL options.
6. Not Available on hermetically sealed units.
* Sized to accommodate one L or T Auxiliary Switch
** Not available on 7032 model.
† Available with letter graduated dials only. Upper end of time range may be twice the value shown
†† 120 cycles = 2 sec.

Our authorized distributors are more likely to maintain the following items in stock for immediate delivery.

7012AA	7012AE	7012ACL	7012PB	7012PJ	7022AA	7022AE	7022AJ	7022PA
7012AB	7012AF	7012BC	7012PC	7012PK	7022AB	7022AF	7022AKT	7022PB
7012AC	7012AH	7012NC	7012PD	7012PKX	7022AC	7022AH	7022BC	7022PC
7012AD	7012AK	7012PA	7012PF	7012PJX	7022AD	7022AI	7022BK	7022PK

Catalog 5-1773450-5
Revised 3-13
www.te.com

Dimensions are shown for reference purposes only. Specifications subject to change.

Dimensions are in millimeters unless otherwise specified.

USA: +1 800 522 6752
Asia Pacific: +86 0 400 820 6015
UK: +44 800 267 666

For additional support numbers please visit www.te.com

AGASTAT 7000 Series, Industrial Electropneumatic Timing Relay (Continued)

Ordering Options — Can only be ordered as factory installed options (Dimensions, where shown, are in inches)

A1 – Single Quick-Connect Terminals

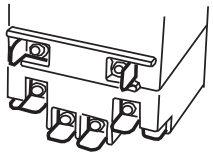

A2 – Double Quick-Connect Terminals

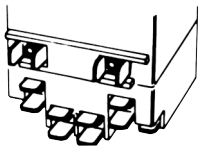

B – Plug-In Connectors
Use with Accessory "C" or "D" below.

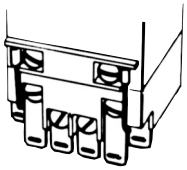

GZ – Metal Enclosure
With knockouts for bottom connection.
3.16" W x 3.84" D x 7.63"H

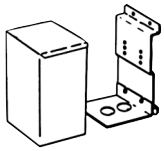

H – Hermetically Sealed Enclosure

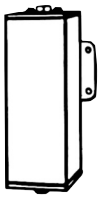

I – Tamper-Proof Cover

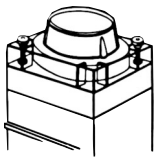

L – Auxiliary Switch

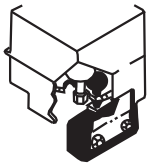

LL – Auxiliary Switch

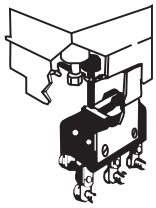

M – Dust tight

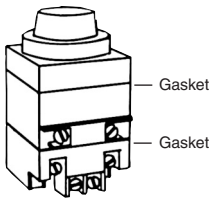

P – Octal Plug Adapter

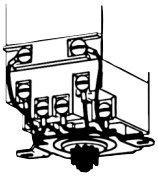

S – Dial Stops

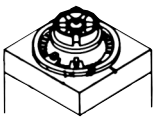

T – Auxiliary Switch

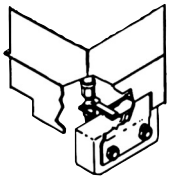

V – Transient/Surge Protection

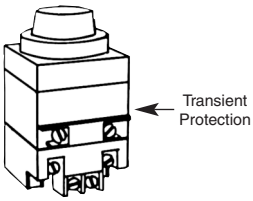

X – Panelmount Kit
Mounting hardware included.

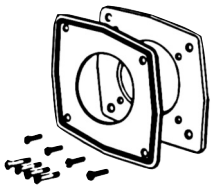

Accessories (Not available for 7032 models)

Plug-In Receptacle (Accessory C)

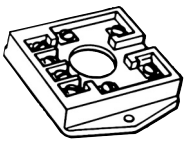

Screw Terminals
Catalog No. 700137.
For use with "B" Option.

Plug-In Receptacle (Accessory D)

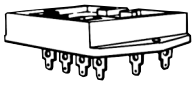

Quick Connect Terminals
Catalog No. 700141.
For use with "B" Option.

Ordering options can only be ordered as factory installed options.

Catalog 5-1773450-5
Revised 3-13

www.te.com

Dimensions are shown for reference purposes only. Specifications subject to change.

Dimensions are in millimeters unless otherwise specified.

USA: +1 800 522 6752
Asia Pacific: +86 0 400 820 6015
UK: +44 800 267 666

For additional support numbers please visit www.te.com

AGASTAT E7000 Series, Nuclear Qualified Time Delay Relays

Seismic and Radiation Tested

In order to satisfy the growing need for electrical control components suitable for class 1E service in nuclear power generating stations, AGASTAT timing relays have been tested for three applications. These E7000 Series electropneumatic devices have demonstrated compliance with the requirements of IEEE Standards 323-1974 (Standard for Qualifying Class 1E Equipment for Nuclear Power Generating Stations) and IEEE Standard 344-1975 (Seismic Qualifications for Nuclear Power Generating Stations). Testing was also referenced to ANSI/IEEE C37.98 (formerly IEEE Standard 501-1978, Standard for Seismic Testing of Relays).

The present E7000 Series design has evolved over 40 years of continual field use in a wider range of industrial applications. On-Delay, Off-Delay and Four-Pole versions are available for use with a choice of 23 coil voltages, as well as time delay adjustment to as long as 60 minutes.

Test Procedure

Test Procedure

AGASTAT timing relay Models E7012, E7022, E7014 and E7024 were tested in accordance with the requirements of IEEE STD. 323-1974 (Standard for Qualifying Class 1E Equipment for Nuclear Power Generating Stations), IEEE STD. 344-1975 (Seismic Qualification for Nuclear Power Generating Stations) and referenced to ANSI/EEE C37.98 (formerly IEEE Standard 501-1978, Standard for Seismic Testing of Relays). The relays were tested according to parameters which in practice, should encompass the majority of applications. Documented data applies to timing relays which were mounted on rigid test fixtures. The following descriptions of the tests performed are presented in their actual sequence.

Baseline Performance

In addition to aging tests, a series of baseline tests were conducted before, and immediately after each aging sequence:

- Pull-in Voltage
- Drop-out Voltage
- Dielectric Strength at 1650V 60Hz
- Insulation Resistance
- Operate Time (milliseconds)
- Recycle Time (milliseconds)
- Time Delay (seconds)
- Repeatability (percent)
- Contact Bounce (milliseconds at 28VDC, 1 amp)
- Contact Resistance (milliohms at 28VDC, 1 amp)

Data was measured and recorded and used for comparison throughout the qualification test program in order to detect any degradation of performance.

Radiation Aging

Relays were subjected to a radiation dosage of 2.0 x 10^5 Rads, which is considered to exceed adverse plant operating requirements for such areas as auxiliary and control buildings.

Cycling with Load Aging

The radiated units were then subjected to 27,500 operations at accelerated rate, with one set of contacts loaded to 120VAC, 60Hz at 10 amps; or 125VDC at 1 amp, and the number of mechanical operations exceeding those experienced in actual service.

Temperature Aging

This test subjected the relays to a temperature of 100°C for 42 days, with performance measured before and after thermal stress.

Seismic Aging

Sufficient interactions were performed at levels less than the fragility levels of the devices in order to satisfy the seismic aging requirements of IEEE STD 323-1974 and IEEE STD 344-1975.

Seismic Qualification

Artificially aged relays were subjected to simulated seismic vibration, which verified the ability of the individual device to perform its required function before, during and/or following design basis earthquakes. Relays were tested in the non-operating, operating and transitional modes.

Hostile Environment

Since the timing relays are intended for use in auxiliary and control buildings, and not in the reactor containment areas, a hostile environment test was performed in place of the Loss of Coolant Accident (LOCA) test. Relays were subjected to combination extreme temperature/humidity plus under/over voltage testing to prove their ability to function under adverse conditions even after having undergone all the previous aging simulation and seismic testing. The devices were operated at minimum and maximum voltage extremes: 85 and 120 percent of rated voltage for AC units, and 80 and 120 percent of rated voltage for DC units, with temperatures ranging from 40°F to 172°F at 95 percent relative humidity.

The SRS shape (at 5 percent damping), is defined by four points:

- point A = 1.0 Hz and an acceleration equal to 25 percent of the Zero Period Acceleration
- point D = 4.0 Hz and 250 percent of the ZPA
- point E = 16.0 Hz and 250 percent of the ZPA
- point G = 33.0 Hz and a level equal to the ZPA

SPECIMEN 1 & 3 (E7012 SERIES)
RELAY STATE: TRANSITIONAL MODE (TD X 2)
AXIS (H + V):
TEST RUN NO. 41, 45, 60, 63
COMPOSITE OF FB/V-, SS/V-, SS/V+, FB/V+ X .707
DUE TO 45° INCLINATION OF TEST MACHINE.

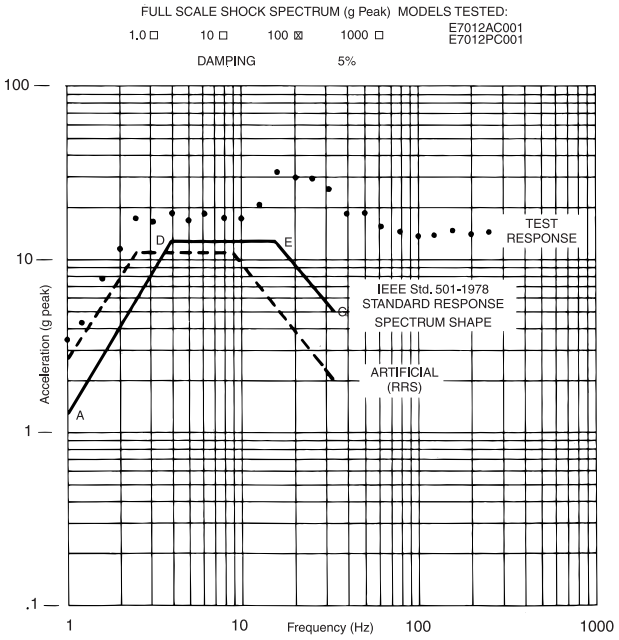

Figure 1. Response Spectrum, Transitional Mode

Catalog 5-1773450-5
Revised 3-13

www.te.com

Dimensions are shown for reference purposes only. Specifications subject to change.

Dimensions are in millimeters unless otherwise specified.

USA: +1 800 522 6752
Asia Pacific: +86 0 400 820 6015
UK: +44 800 267 666

For additional support numbers please visit www.te.com

AGASTAT E7000 Series, Nuclear Qualified Time Delay Relays (Continued)

Operation

Two basic operating types are available: **On-delay** models provide a delay period on energization, at the end of which the switch transfers the load from one set of contacts to another. Deenergizing the unit during the delay period immediately recycles the unit, readying it for another full delay period on reenergization.

In **off-delay** models the switch transfers the load immediately upon energization, and the delay period does not begin until the unit is deenergized. At the end of the delay period the switch returns to its original position. Reenergizing the unit during the delay period immediately resets the timing, readying it for another full delay period on deenergization. No power is required during the timing period.

On-Delay Models, E7012

(Delay on pick-up)

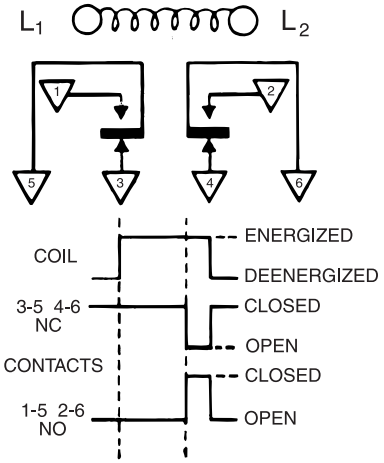

Off-Delay Models, E7022

(Delay on drop-out)

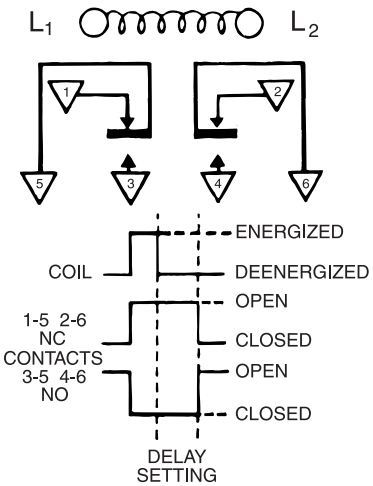

Applying for at least 50 msec voltage to the coil (L1-L2) starts a time delay lasting for the preset time. During this period the normally closed contacts (3–5 and 4–6) remain closed. At the end of the delay period the normally closed contacts break and the normally open contacts (1–5 and 2–6) make. The contacts remain in this transferred position until the coil is deenergized, at which time the switch instantaneously returns to its original position.

Deenergizing the coil, either during or after the delay period, will recycle the unit within .050 second. It will then provide a full delay period upon reenergization, regardless of how often the coil voltage is interrupted before the unit has been permitted to "time-out" to its full delay setting.

Applying voltage to the coil (for at least .050 second) will instantaneously transfer the switch, breaking the normally closed contacts (1–5 and 2–6), and making the normally open contacts (3–5 and 4–6). Contacts remain in this transferred position as long as the coil is energized. The time delay begins immediately upon deenergization. At the end of the delay period the switch returns to its normal position.

Reenergizing the coil during the delay period will immediately return the timing mechanism to a point where it will provide a full delay period upon subsequent deenergization. The switch remains in the transferred position.

Four Pole Models, E7014, E7024

With the addition of an extra switch block at the bottom of the basic units, this version of the E7000 Series offers four pole switch capacity with simultaneous timing or two-step timing. The two-step operation is achieved by factory adjustment to your specifications.

Dimensions are shown for reference purposes only. Specifications subject to change.

Dimensions are in millimeters unless otherwise specified.

USA: +1 800 522 6752
Asia Pacific: +86 0 400 820 6015
UK: +44 800 267 666

For additional support numbers please visit www.te.com

AGASTAT E7000 Series, Nuclear Qualified Time Delay Relays (Continued)

Time Delay Information

All units are furnished with dials in linear increments covering the range selected. (See "Catalog Number Code"). In addition, ranges B through K provide non-linear adjustment from .2 second to the beginning of the linear zone.

Repeat Accuracy

Repeat accuracy at any fixed temperature is defined as:

*The repeat accuracy deviation (A_R) of a time-delay relay is a measure of the maximum deviation in the time-delay that will be experienced in successive operations at any particular time setting of the relay and for any particular operating voltage or current.

Repeat accuracy is obtained from the following formula:

$$A_R = \pm 100 \frac{(T_1 - T_2)}{(T_1 + T_2)}$$

Where —
T_1 = Maximum time delay.
T_2 = Minimum time delay.

*NEMA part ICS 2-218.02

Repeat accuracy at any fixed temperature is ± 10% of setting.

The first time delay afforded by units with H (3 to 30 minutes) and I (6 to 60 minutes) time ranges may be up to 15% longer than subsequent delays, due to coil temperature rise.

Dial position error is not included in the repeat accuracy specification above.

Delay Setting

Dial graduations are provided to minimize the time required to set the unit to a specific delay. Rotate the dial clockwise to increase the delay; counter-clockwise to decrease it.

The following procedure is recommended if the unit must be set to a very precise delay value:

1. Set dial to desired time delay. (On letter-graduated units, this requires an approximation of a percentage value between the arrowhead "▼" on the dial, which provides minimum time, and the letter "E," which provides maximum time.)
2. Record as many time delays as required to establish a stable average.
3. If the recorded average delay is shorter than the desired time, turn dial slightly clockwise; if it is longer, turn dial counter-clockwise.
4. Repeat step 2 after each adjustment, until required delay is recorded.

Because of the variety of environments in which time delay relays are applied, we recommend a re-check of the time delay after approximately three hours of operation. If any change from the initial time setting is apparent, the relay should be reset to the desired delay. The time delay accuracy should then be monitored on a monthly basis for several months, and if no substantial change in time delay has taken place, the frequency of checking may be reduced. It is recommended that this procedure be incorporated in the Operating Instructions for your equipment.

Contact Ratings — Nuclear

Resistive at 125 VDC . . . . . 1.0 Amp
Resistive at 120 VAC 60 Hz. . . 10.0 Amp

Contact Ratings — Non-Nuclear

Contact Capacity in Amps
(Resistive Loads)

Contact Voltage	Min. 100,000 Operations
30VDC	15.0
110VDC	1.0
120V 60Hz	20.0
240V 60 Hz	20.0
480V 60 Hz	12.0

Four pole models add approximately 1-1/4" to the maximum height of the basic model, approximately 1/8" to the depth. They are designed for vertical operation only.

Timing Adjustment

The AGASTAT E7000 Series is the first electropneumatic timer to offer the ease of adjustment and resetting of a graduated dial head. Discrete ranges covering a total span from .1 second to 60 minutes are available. (See table on page 12-20.) Each has its own graduated, clearly identified dial. Timing is set by simply turning the dial to the desired time value. In the zone of approximately 25° separating the high and low ends of timing ranges A, D, E, and K, instantaneous operation (no time delay) will occur. All other ranges produce an infinite time delay when the dial is set in this zone.

Catalog 5-1773450-5
Revised 3-13

www.te.com

Dimensions are shown for reference purposes only. Specifications subject to change.

Dimensions are in millimeters unless otherwise specified.

USA: +1 800 522 6752
Asia Pacific: +86 0 400 820 6015
UK: +44 800 267 666

For additional support numbers please visit www.te.com

AGASTAT E7000 Series, Nuclear Qualified Time Delay Relays (Continued)

Environmental Characteristics (Qualified Life) Parameter

Temperature —
Minimum — 40°F
Normal — 70°F - 104°F
Maximum — 156°F

Humidity (R.H. %) —
Minimum — 10%
Normal — 40-60%
Maximum — 95%

Pressure — Atmospheric

Radiation (rads) —
2.0 X 10^5 Gamma max.

Operating Conditions (Normal Environment)

Coil Operating Voltage, Nominal (Rated) —
Pull-in (% of rated value) —
80% min. with DC; 85% min. with AC coils
Drop-out (% of rated value) —
10% approx. with DC coils;
50% approx. with AC coils
Power (Watts at rated value) —
8 approx. with DC or AC coils

Relay Operate Time —
Model E7012 — N/A
Model E7022 — 50 ms. max. with DC or AC coils

Relay Release (Recycle) Time —
Model E7012 — 50 ms max. with DC or AC coils
Model E7022 — N/A

Contact Ratings, Continuous —
(Resistive at 125 Vdc) —
1.0 amp with DC or AC coils
(Resistive at 120 Vac, 60 Hz) —
10.0 amp with DC or AC coils

Insulation Resistance (In megohms at 500 Vdc) —
500 min. with DC or AC coils

Dielectric (Vrms, 60 Hz) —
Between Terminals and Ground —
1,500 with DC or AC coils
Between Non-connected Terminals — 1,000 with DC or AC coils

Repeat Accuracy — ±10% with DC or AC coils

Operating Conditions (Abnormal Environment)

Adverse Operating Specifications	Normal	DBE "A"	DBE "B"	DBE "C"	DBE "D"
Temperature (°F)	70-104	40	120	145	156
Humidity (R.H. %)	40-60	10-95	10-95	10-95	10-95
Coil Operating Voltage * (% of Rated)					
Model E7012 (AC)	85-110	85-110	85-110	85-110	85-110
(DC)	80-110	80-110	80-110	90-110	90-110
Model E7022 (AC)	85-110	85-110	85-110	85-110	85-110
(DC)	80-110	80-110	80-110	80-110	80-110

*All coils may be operated on intermittent duty cycles at voltages 10% above listed maximums (Intermittent Duty = Maximum 50% duty cycle and 30 minutes "ON" time.)

REPLACEMENT SCHEDULE
The qualified life of this unit is 25,000 operations or 10 years from the date of manufacture, whichever occurs first.

Contact ratings as listed under the UL Component Recognition Program for 100,000 operations (Per pole) —
10 Amps, resistive, 240 VAC;
1/4 horsepower, 120 VAC/240 VAC;
15 Amps, 30 VDC;
5 Amps, General Purpose, 600 VAC

Coil Data —
All units draw approximately 8 watts power at rated voltage.

The operating voltage range for AC relays is 85 to 110 percent of nominal rated value.

AC units drop-out at approximately 50% of rated voltage.

The operating range of DC relays is 80 to 110 percent of nominal rated value.

DC units drop-out at approximately 10% of rated voltage.

All units may be operated on intermittent duty cycles (50% on/off, maximum 30 minutes on) at voltages 10% above the listed maximums.

Approximate Weight —
Model E7012 and E7022 with AC Coils — 2.13 lbs.

Model E7012 and E7022 with DC Coils — 2.25 lbs.

Model E7014 and E7024 with AC Coils — 2.43 lbs.

Model E7014 and E7024 with DC Coils — 2.57 lbs.

(Weight may vary slightly with particular coil voltage.)

Terminals —
Standard screw terminals (#8 – 32 truss head screws supplied) are located on the front of the unit, with permanent schematic markings. Barrier isolation is designed to accommodate spade or ring-tongue terminals with spacing to meet industrial control specifications.

Note: TE Connectivity Corporation cannot recommend the use of its products in the containment areas of Nuclear Power Generating Stations.

The date of manufacture can be found in the first four (4) digits of the serial number on the nameplate:

First two digits indicate the year — XX
Second two digits indicate the week. — XX

Example: Date code 8014: 80 indicates 1980; 14 indicates the week of April 2 through 8.

MODEL	**E7012PC003**	
COIL	**125VDC**	Serial **8014 –**
TIME	**1.5 TO 15 SEC.**	
	L1	L2

Catalog 5-1773450-5
Revised 3-13

www.te.com

Dimensions are shown for reference purposes only. Specifications subject to change.

Dimensions are in millimeters unless otherwise specified.

USA: +1 800 522 6752
Asia Pacific: +86 0 400 820 6015
UK: +44 800 267 666

For additional support numbers please visit www.te.com

AGASTAT E7000 Series, Nuclear Qualified Time Delay Relays (Continued)

Dimensions and Mounting

MODEL E7012, E7022

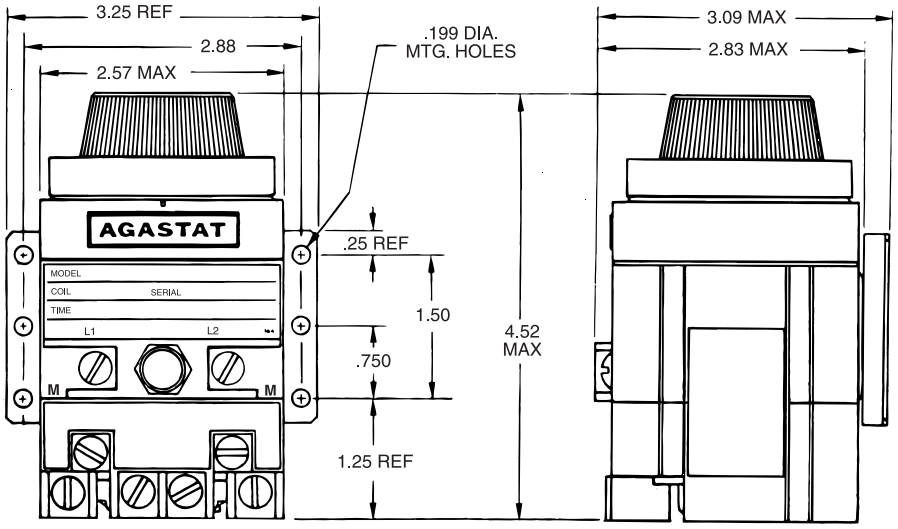

QUALIFICATION TESTED FOR VERTICAL OPERATION ONLY

MODEL E7014, E7024

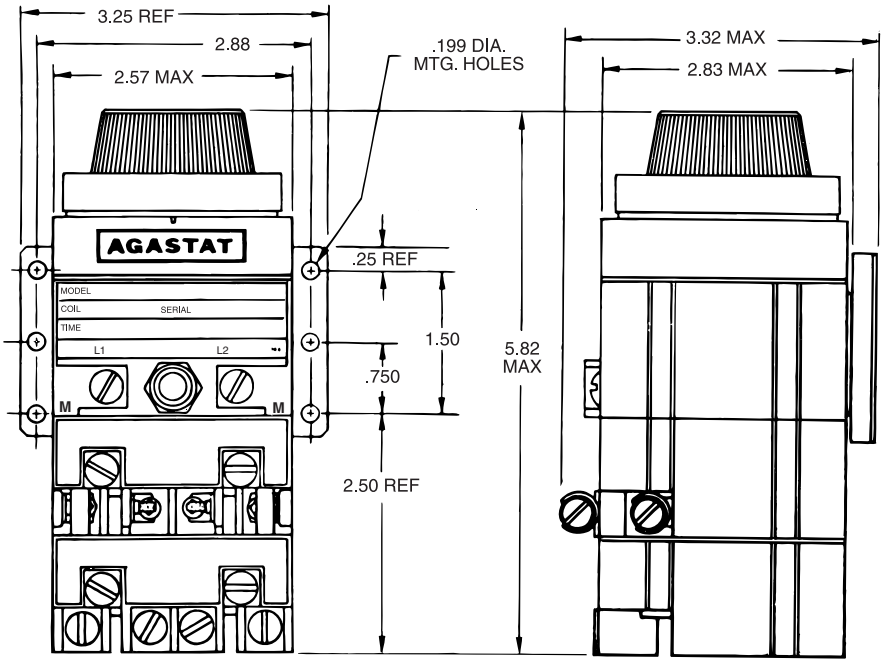

QUALIFICATION TESTED FOR VERTICAL OPERATION ONLY

Mounting Instructions

The E7000 Series relay must be mounted in the vertical position. All performance specifications of these units are valid only when they are mounted in this manner.

A bracket for mounting the device and the screws and lockwashers required to attach it to the relay are supplied with each unit. Four #8–32 tapped holes are provided in the rear of the device for attaching the mounting bracket, or for mounting the relay directly to a panel, from the rear.

Catalog 5-1773450-5
Revised 3-13

www.te.com

Dimensions are shown for reference purposes only. Specifications subject to change.

Dimensions are in millimeters unless otherwise specified.

USA: +1 800 522 6752
Asia Pacific: +86 0 400 820 6015
UK: +44 800 267 666

For additional support numbers please visit www.te.com

AGASTAT E7000 Series, Nuclear Qualified Time Delay Relays (Continued)

Ordering Information

Catalog Number Code

E	70	1	2	A	A	**004
Nuclear Safety Related	AGASTAT 7000 Series Timing Relay	Operation 1 – On-delay 2 – Off-delay	Contact Arrangement 2 – Double Pole Double Throw 4 – Four Pole Double Throw	Coil Voltage	Time Range E7012, E7022	Configuration Code

Coil Voltage

	Code		
AC	A	120V	60 Hz
		110V	50 Hz
	B	240V	60Hz
		220V	50Hz
	C	480V	60Hz
	D	550V	60Hz
	E	24V	60Hz
	F	127V	50Hz
	G	240V	50Hz
	H	12V	60Hz
	I	6V	60Hz
	J	208V	60Hz
DC	M	28	VDC
	N	48	VDC
	O	24	VDC
	P	125	VDC
	Q	12	VDC
	R	60	VDC
	S	250	VDC
	T	550	VDC
	U	16	VDC
	V	32	VDC
	W	96	VDC
	Y	6	VDC
	Z	220	VDC

Time Range E7012, E7022

Code		
A	.1 to	1 sec.
B	.5 to	5 sec.
C	1.5 to	15 sec.
D	5 to	50 sec.
E	20 to	200 sec.
F	1 to	10 min.
H	3 to	30 min.
I	6 to	60 min.
K	1 to	300 sec.

***E7014**

A	.2 to	2 sec.
B	.7 to	7 sec.
C	2 to	20 sec.
D	10 to	100 sec.
E	30 to	300 sec.
F	1.5 to	15 min.
H	3 to	30 min.

E7024

A	.1 to	1 sec.
B	.5 to	5 sec.
C	1.5 to	15 sec.
D	5 to	50 sec.
E	20 to	200 sec.
F	1 to	10 min.
H	3 to	30 min.
I	6 to	60 min.
K	1 to	300 sec.

* Model E7014 is available with letter-graduated dials only. The upper end of the time ranges in these models may be twice the values shown.

** **Configuration Code**
The Configuration Code is a suffix to the Model Number which provides a means of identification. When a significant product change is introduced, the Configuration code and specification sheets will be revised. (001, 002, 003, 004, etc.).

Relay Classifications Control Code Summary

Configuration Control

Product	Code – 001	Code – 002	Code – 003	Code – 004
E7000	Contains all materials present in original qualification testing.	Sept. 1981 — Elastomer gasket material change to improve thermal aging properties. Material changed for Buna-N or Neoprene to Neoprene only.	March 1989 — Paint change to timing head portion of relay. New paint: Sherwin-Williams E61YC37 primer and PPG W48392 silver polyester top coat.	Dec. 1991 — Paint change to timing head portion of relay. New paint: Prime coatings No. 28032 Enamel. No primer is used with this finish.

Configuration Code: The Configuration code is a suffix to the Model Number which provides a means of identification. When a significant product change is introduced, the Configuration code and specification sheets will be revised. (001, 002, 003, 004, etc.)

PPG is a trademark of PPG Industries.
Sherwin-Williams is a trademark of The Sherwin-Williams Company.

AGASTAT EGP/EML/ETR Series, Nuclear Qualified Control Relays

Seismic and Radiation Tested

In order to satisfy the need for electrical control components suitable for class 1E service in nuclear power generating stations, AGASTAT control relays have been tested for these applications. Series EGP, EML and ETR have demonstrated compliance with the requirements of IEEE Standards 323-1974 (Standard for qualifying Class 1E Equipment for Nuclear Power Generating Stations) and IEEE Standard 344-1975 (Seismic Qualification for Nuclear Power Generating Stations). Testing was also referenced to ANSI/IEEE C37.98 (formerly IEEE Standard 501-1978, Standard for Seismic Testing of Relays).

The design of Series EGP, EML and ETR control relays has evolved over 20 years of continual use in a wide range of industrial applications. Control Relay, Magnetic Latch and Timing Relay versions are available for use with a choice of coil voltages, as well as an internal fixed or adjustable potentiometer in the Series ETR time delay version.

Test Procedure

Test Procedure

AGASTAT control relay Series EGP, EML and ETR were tested in accordance with the requirements of IEEE STD. 323-1974 (Standard for Qualifying Class 1E Equipment for Nuclear Power Generating Stations), IEEE STD. 344-1975 (Seismic Qualification for Nuclear Power Generating Stations) and referenced to ANSI/IEEE C37.98 (formerly IEEE Standard 501-1978, Standard for Seismic Testing of Relays). The relays were tested according to parameters which in practice, should encompass the majority of applications. Documented data applies to relays which were mounted on rigid test fixtures. The following descriptions of the tests performed are presented in their actual sequence.

Baseline Performance

In addition to aging tests, a series of baseline tests were conducted before, and immediately after each aging sequence:

- Pull-in Voltage
- Drop-out Voltage
- Dielectric Strength at 1650V 60Hz
- Insulation Resistance
- Operate Time (milliseconds)
- Recycle Time (milliseconds)
- Time Delay (seconds) } Series ETR only
- Repeatability (percent) } Series ETR only
- Contact Bounce (milliseconds at 28VDC, 1 amp)
- Contact Resistance (milliohms at 28VDC, 1 amp)

Data was measured and recorded and used for comparison throughout the qualification test program in order to detect any degradation of performance.

Radiation Aging

Relays were subjected to a radiation dosage of 2.0 x 10^5 Rads, which is considered to exceed adverse plant operating requirements for such areas as auxiliary and control buildings.

Cycling with Load Aging

The radiated units were then subjected to 27,500 operations at accelerated rate, with one set of contacts loaded to 120VAC, 60Hz at 10 amps; or 125VDC at 1 amp, and the number of mechanical operations exceeding those experienced in actual service.

Temperature Aging

This test subjected the relays to a temperature of 100°C for 42 days, with performance measured before and after thermal stress.

Seismic Aging

Sufficient interactions were performed at levels less than the fragility levels of the devices in order to satisfy the seismic aging requirements of IEEE STD 323-1974 and IEEE STD 344-1975.

Seismic Qualification

Artificially aged relays were subjected to simulated seismic vibration, which verified the ability of the individual device to perform its required function before, during and/or following design basis earthquakes. Relays were tested in the non-operating, operating and transitional modes.

Hostile Environment

Since the timing relays are intended for use in auxiliary and control buildings, and not in the reactor containment areas, a hostile environment test was performed in place of the Loss of Coolant Accident (LOCA) test. Relays were subjected to combination extreme temperature/humidity plus under/over voltage testing to prove their ability to function under adverse conditions even after having undergone all the previous aging simulation and seismic testing. The devices were operated at minimum and maximum voltage extremes: 85 and 120 percent of rated voltage for AC units, and 80 and 120 percent of rated voltage for DC units, with temperatures ranging from 40°F to 172°F at 95 percent relative humidity.

The SRS shape (at 5 percent damping), is defined by four points:

- point A = 1.0 Hz and an acceleration equal to 25 percent of the Zero Period Acceleration (ZPA)
- point D = 4.0 Hz and 250 percent of the ZPA
- point E = 16.0 Hz and 250 percent of the ZPA
- point G = 33.0 Hz and a level equal to the ZPA

Specimen 13, 15 & 16 (EGP Series)
Relay State: Non-Operate Mode (De-ener.)
Test Run No. 318, 319, (205-206), (198-199)
Axis (H + V):
Composite of FB/V-, SS/V, FB/V+ X .707
Due to 45° inclination of test machine.

Additional Seismic Response Curves are available on request.

Relay State: Non-Operate Mode (De-ener.)
Test Run No. 318, 319, (205-206), (198-199)

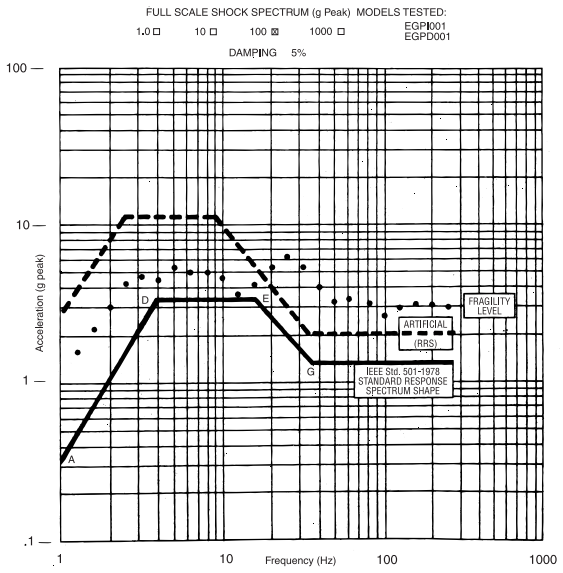

Figure 1. Model EGP, Response Spectrum, Non-Operate Mode

Catalog 5-1773450-5
Revised 3-13

www.te.com

Dimensions are shown for reference purposes only. Specifications subject to change.

Dimensions are in millimeters unless otherwise specified.

USA: +1 800 522 6752
Asia Pacific: +86 0 400 820 6015
UK: +44 800 267 666

For additional support numbers please visit www.te.com

AGASTAT EGP/EML/ETR Series, Nuclear Qualified Control Relays (Continued)

Operation

Series EGP
Power Relay

Applying a voltage to the coil (B1-B4) for more than 50 msec energizes the coil and instantaneously transfers the switch, breaking the normally closed contacts (M1-R1, M2-R2, M3-R3, M4-R4) and making the normally open contacts (M1-T1, M2-T2, M3-T3, M4-T4). The contacts remain in this transferred position until the coil is deenergized, at which time the switch instantaneously returns the contacts to their original position.

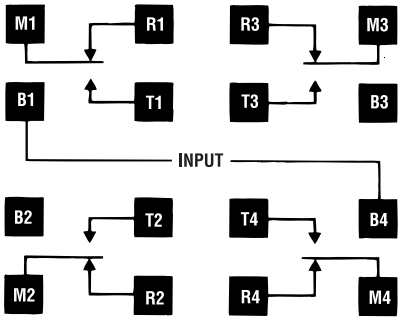

Series EML
Magnetic Latch

Application of a voltage to the latching input (B1-B4) will cause the relay to latch in (Make the N.O. Contacts, break the N.C. Contacts). When this voltage is removed, the relay will remain in this "Latched" condition. Application of a voltage to the un-latching input (B3-B4) will cause the relay to dropout (Break the N.O. Contacts, make the N.C. Contacts). When this voltage is removed, the relay will remain in this "Unlatched" condition.

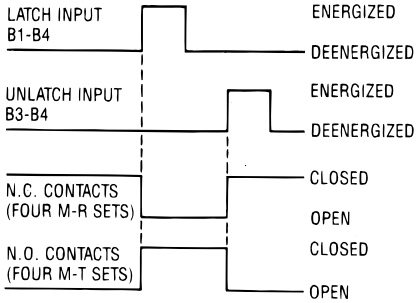

Wiring Diagram (Wiring and Connections)

The ML relay has three terminals for the windings: latching winding between terminals B1 and B4, un-latching winding between terminals B3 and B4.

The ML Relay is not symmetrical due to its three coil connections.

The relays are normally delivered polarized so that terminal B4 carries the negative voltage. To reverse the polarity, a deenergize/energize cycle should be carried out using a voltage 50% greater than the normal rating.

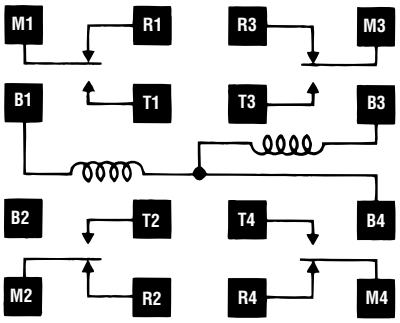

Continuous Duty Wiring

Since the double wound coil does not have a continuous duty rating, voltage pulses to the coils should not exceed a ratio of 40% on, to 60% off, with maximum power-on periods not to exceed 10 minutes.

If continuous energizing only is available, a resistor/capacitor network should be connected as shown below. In this case the shortest time between two operations must not be less than 5 seconds.

The relay will always assume the energized position in the event of both windings being energized simultaneously.

It is advisable not to put another load in parallel with the windings of the ML relay.

ML Series Relay for DC Operation with a Resistor/Capacitor Network

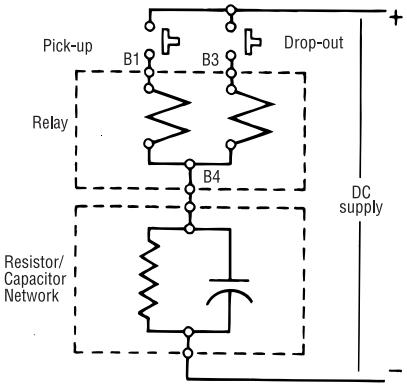

R-C Values

Nominal Voltage VDC	R		C	
	Ohms ±5%	Watts	UF	VDC
12	62	2	5000	15
24	240	2	2000	50
48	1000	2	500	100
125	6200	2	150	150

Series ETR
Time Delay Relay
(Delay on Energization)

Applying a voltage to the input terminals (B1-B4) for more than 50 msec starts a time delay lasting for the preset time period. During this period the normally closed contacts (Four M-R sets) remain closed. At the end of the delay period, the normally closed contacts break and the normally open contacts (Four M-T sets) make. The contacts remain in this position until the relay is deenergized, at which time the contacts instantaneously return to their normal position. Deenergizing the relay, either during or after the delay period will recycle the unit within .075 second. It will then provide a full delay period upon reenergization, regardless of how often the voltage is interrupted before the unit has been permitted to "time-out" to its full delay setting.

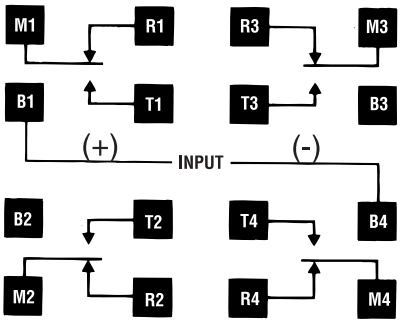

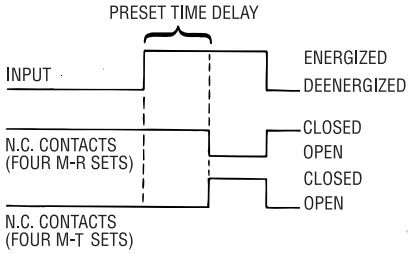

Catalog 5-1773450-5
Revised 3-13

www.te.com

Dimensions are shown for reference purposes only. Specifications subject to change.

Dimensions are in millimeters unless otherwise specified.

USA: +1 800 522 6752
Asia Pacific: +86 0 400 820 6015
UK: +44 800 267 666

For additional support numbers please visit www.te.com

AGASTAT EGP/EML/ETR Series, Nuclear Qualified Control Relays (Continued)

Specifications

Contact Ratings — Series EGP/EML/ETR —

Contact Capacity in Amperes (Resistive)

Contact Voltage	Min. 1,000,000 Operations
24 Vdc	10.0 Amps
125 Vdc	1.0 Amp
120 Vac, 60 Hz	10.0 Amps
240 Vac, 60 Hz	7.5 Amps

Contact Ratings, UL — Series EGP/EML Only —
Contact ratings as Listed under the Underwriters Laboratory Component Recognition Program. (Two poles per load):
1/3 Horsepower, 120 Vac
10 Amps, General Purpose, 240 Vac
120 Vdc, 1.0 Amp

Mechanical Life — Series EGP/EML/ETR —
25,000 mechanical operations

Approximate Weight — Series EGP/EML/ETR —
1 lb.

Transient Protection — Series ETR Only — A 1500 volt transient of less than 100 microseconds, or 1000 volts of less than 1 millisecond will not affect timing accuracy

Timing Adjustment — Series ETR Only —
Internal Fixed
Internal Potentiometer

Time Ranges — Series ETR Only —
A — .15 to 3 sec.
B — .55 to 15 sec.
C — 1 to 30 sec.
D — 2 to 60 sec.
E — 4 to 120 sec.
G — 10 to 300 sec.
I — 2 to 60 min.
N — 1 to 30 min.

Repeat Accuracy — Series ETR Only —
The repeat accuracy deviation (A_R) of a time-delay relay is a measure of the maximum deviation in the time-delay that will be experienced in five successive operations at any particular time setting of the relay and over the operating voltage and temperature range specified. Repeat accuracy is obtained from the following formula:

$$A_R = \pm 100 \frac{(T_1 - T_2)}{(T_1 + T_2)}$$

Where —
T_1 = Maximum Time Delay
T_2 = Minimum Time Delay

The date of manufacture can be found in the first four (4) digits of the serial number on the nameplate:

First two digits indicate the year — XX
Second two digits indicate the week. — XX

Example: In the date code 7814 below:
"78" indicates the year 1978;
"14" indicates the 14th week
(or April 3 through April 7).

Model	
Coil	125 VDC
Serial	78140028

Note: TE Corporation does not recommend the use of its products in the containment areas of Nuclear Power Generating Stations.

REPLACEMENT SCHEDULE
Series EGP/EML/ETR
The qualified life of these relays is 25,000 electrical operations or 10 years from the date of manufacture, whichever occurs first.

Catalog 5-1773450-5
Revised 3-13

www.te.com

Dimensions are shown for reference purposes only. Specifications subject to change.

Dimensions are in millimeters unless otherwise specified.

USA: +1 800 522 6752
Asia Pacific: +86 0 400 820 6015
UK: +44 800 267 666

For additional support numbers please visit www.te.com

AGASTAT EGP/EML/ETR Series, Nuclear Qualified Control Relays (Continued)

Operating Characteristics

Environmental Conditions (Qualified Life) — Series EGP/EML/ETR

Parameter	Min.	Normal	Max.
Temperature (°F)	40	70-104	156
Humidity (R.H. %)	10	40-60	95
Pressure	—	Atmospheric	—
Radiation (rads)	—	—	2.0×10^5 (Gamma)

Operating Conditions, Normal Environment – Series EGP/EML/ETR

Normal Operating Specifications	With DC Coils			With AC Coils	
	EGP	**EML**	**ETR**	**EGP**	**ETR**
Coil Operating Voltage, Nominal (rated)*	As Spec.	As Spec.	As Spec.	As Spec.	As Spec.
Pull-in (% of rated value)	80% Min.	85% Min.	80% Min.	85% Min.	85% Min.
Drop-out (% of rated value)	5-45%	85% Min.	5-45%	5-45%	5-50%
Continuous (% of rated value)	110% Max.	N/A	110% Max.	110% Max.	110% Max.
Power (Watts at rated value)					
Pull-in	6 Apprx.	15 Apprx.	6 Apprx.	6 Apprx.	6 Apprx.
Drop-out	N/A	13 Apprx.	N/A	N/A	N/A
Relay Operate Time	30 ms Max.	25 ms Max. With min. latch pulse of 30 ms.	N/A	35 ms Max.	N/A
Relay Release (Recycle) Time	25 ms Max.	20 ms Max. With min. latch pulse of 30 ms.	75 ms Max.	85 ms Max.	75 ms Max.
Contact Ratings, Continuous					
Resistive at 125 vdc	1.0 amp.	1.0 amp.	1.0 amp.	1.0 amp.	1.0 amp.
Resistive at 120 vac, 60 Hz	10.0 amp.	10.0 amp.	10.0 amp.	10.0 amp.	10.0 amp.
Insulation Resistance (In megohms at 500 vdc)	500 Min.	500 Min.	500 Min.	500 Min.	500 Min.
Dielectric (vrms, 60 Hz)					
Between Terminals and Ground	1,500	1,500	1,500	1,500	1,500
Between Non-connected Terminals	1,500	1,500	1,500	1,500	1,500
Repeat Accuracy	N/A	N/A	±5%	N/A	±5%

Operating Conditions, Abnormal Environment – Series EGP/EML

Adverse Operating Specifications	Normal	DB "A"	DB "B"	DB "C"	DB "D"
Temperature (°F)	70-104	40	120	145	156
Humidity (R.H. %)	40-60	10-95	10-95	10-95	10-95
Coil Operating Voltage (% of rated)*					
AC (Series EGP only)	85-110	85-110	85-110	85-110	85-110
DC (Series EGP only)	80-110	80-110	80-110	80-110	80-110
DC (Series EML only)	85-110	85-110	85-110	85-110	85-110
Relay Operate Time (ms)					
AC (Series EGP only)	35 Max.	35 Max.	35 Max.	35 Max.	35 Max.
DC (Series EGP, Series EML)	30 Max.	25 Max.	37 Max.	40 Max.	40 Max.

Operating Conditions, Abnormal Environment – Series ETR

Adverse Operating Specifications	With DC Coils	With AC Coils
Coil Operating Voltage (rated)*	As Spec.	As Spec.
Pull-in (% of rated value)	80% Min.	85% Min.
Continuous (% of rated value)	110% Max.	110% Max.
Drop-out (% of rated value)	5-45%	5-50%
Power (Watts at rated value)	6 Apprx.	6 Apprx.
Relay Release (Recycle) Time	75 ms Max.	75 ms Max.
Contact Ratings, Continuous		
Resistive at 125 vdc	1.0 amp.	1.0 amp.
Resistive at 120 vac, 60 Hz	10.0 amp.	10.0 amp.
Repeat Accuracy	±10%	±10%

*All coils may be operated on intermittent duty cycles at voltages 10% above listed maximums
(Intermittent Duty = Maximum 50% duty cycle and 30 minutes "ON" time.)

Dimensions are shown for reference purposes only. Specifications subject to change.

Dimensions are in millimeters unless otherwise specified.

USA: +1 800 522 6752
Asia Pacific: +86 0 400 820 6015
UK: +44 800 267 666

For additional support numbers please visit www.te.com

AGASTAT EGP/EML/ETR Series, Nuclear Qualified Control Relays (Continued)

Dimensions and Mounting

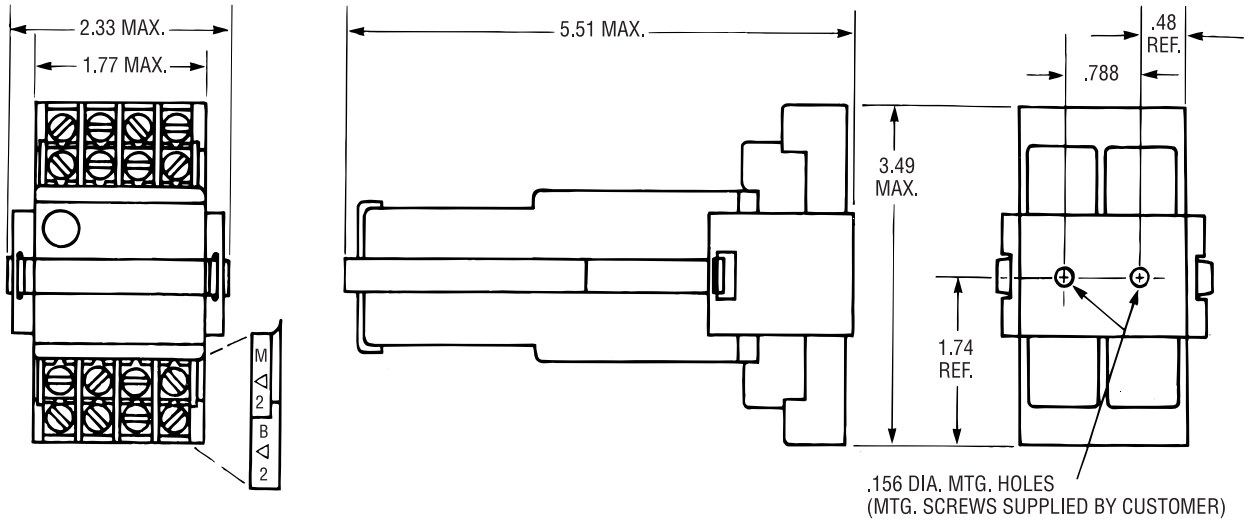

Qualification tested in the horizontal position, mounted in socket ECR0001-001 (captive clamp terminals) or in socket ECR0002-001 (screw terminals) with locking straps ECR0133.

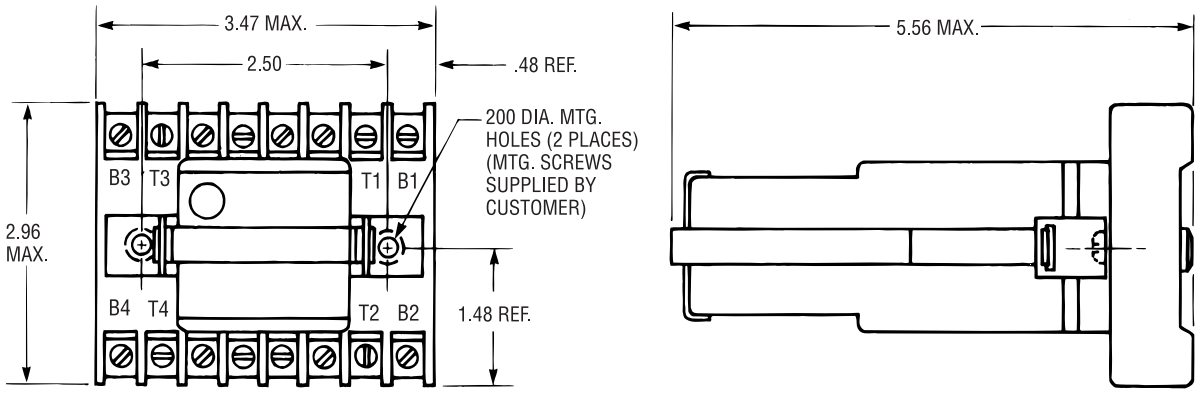

Qualification tested in the horizontal position, mounted in socket ECR0095-001 (screw terminals) with locking strap ECR0155.

Series EGP, EML and ETR AGASTAT control *relays must be mounted in the horizontal position*; performance specifications of these units are valid only when they are mounted as indicated in either of the above drawings. All dimensions in inches.

Catalog 5-1773450-5
Revised 3-13

www.te.com

Dimensions are shown for reference purposes only. Specifications subject to change.

Dimensions are in millimeters unless otherwise specified.

USA: +1 800 522 6752
Asia Pacific: +86 0 400 820 6015
UK: +44 800 267 666

For additional support numbers please visit www.te.com

AGASTAT EGP/EML/ETR Series, Nuclear Qualified Control Relays (Continued)

Ordering Information

Catalog Number Code — Series EGP and EML

E — **Nuclear Safety Related**

Code
E

GP — **AGASTAT Control Relay Model**

Code
GP – Power Relay
ML – Magnetic Latch

A — **Coil Voltage**

Code
DC
A – 12 VDC
B – 24 VDC
C – 48 VDC
D – 125 VDC
E – 110 VDC
F – 250 VDC (Series EGP Only)

AC
G – 24 VAC 60 Hz (Series EGP Only)
H – 48 VAC 60 Hz (Series EGP Only)
I – 120 VAC 60 Hz (Series EGP Only)
J – 220 VAC 60 Hz (Series EGP Only)

004 — **Configuration Code***

Code
004

*** Configuration Code**
The Configuration Code is a suffix to the Model Number which provides a means of identification. When a significant product change is introduced, the Configuration code and specification sheets will be revised.

E — **Nuclear Safety Related**

Code
E

TR14 — **AGASTAT Control Relay Model**

Code
TR14 – Time Delay Relay (Delay on Pull-in)

B — **Operating Voltage**

Code
DC
B – 24 VDC
D – 125 VDC

AC
I – 120 VAC 60Hz

1 — **Timing Adjustment**

Code
1 – Internal Fixed
3 – Internal Potentiometer

A — **Time Range**

Code
A – .15 to 3 sec.
B – .55 to 15 sec.
C – 1 to 30 sec.
D – 2 to 60 sec.
E – 4 to 120 sec.
G – 10 to 300 sec.
I – 2 to 60 min.
N – 1 to 30 min.

****004** — **Configuration Code**

Code
004

*** Configuration Code**
The Configuration Code is a suffix to the Model Number which provides a means of identification. When a significant product change is introduced, the Configuration code and specification sheets will be revised.

Dimensions are shown for reference purposes only. Specifications subject to change.

Dimensions are in millimeters unless otherwise specified.

USA: +1 800 522 6752
Asia Pacific: +86 0 400 820 6015
UK: +44 800 267 666

For additional support numbers please visit www.te.com

AGASTAT EGP/EML/ETR Series, Nuclear Qualified Control Relays (Continued)

Relay Classifications Control Code Summary

Configuration Control

Product	Code – 001	Code – 002	Code – 003	Code – 004
EGP	Contains all materials present in original qualification testing.	Nov. 1981 — Material change to coil wrapping tape and lead wire insulation to improve thermal life.	Dec. 1987 — Material change on leaf spring from nickel copper to beryllium copper.	Dec. 1995 — Material change on bobbin from Nylon ZYTEL 101 to RYNITE FR530. Material change on base from Melamine Phenolic to GRILON PMV-5HV0.
EML	Contains all materials present in original qualification testing.	Nov. 1981 — Material change to coil wrapping tape and lead wire insulation to improve thermal life.	Dec. 1987 — Material change on leaf spring from nickel copper to beryllium copper.	Dec. 1995 — Material change on bobbin from Nylon ZYTEL 101 to RYNITE FR530. Material change on base from Melamine Phenolic to GRILON PMV-5HV0.
ETR	Contains all materials present in original qualification testing.	Nov. 1981 — Material change to coil wrapping tape and lead wire insulation to improve thermal life.	Dec. 1987 — Material change on leaf spring from nickel copper to beryllium copper.	Dec. 1995 — Material change on bobbin from Nylon ZYTEL 101 to RYNITE FR530. Material change on base from Melamine Phenolic to GRILON PMV-5HV0.
ECR0001	Contains all materials present in original qualification testing.	June 1989 — Material change from NORYL N-225 std. black to NORYL SE-I-701AA black.		
ECR0002	Contains all materials present in original qualification testing.	June 1989 — Material change from NORYL N-225 std. black to NORYL SE-I-701AA black.		
ECR0095	Contains all materials present in original qualification testing.	June 1989 — Material change from NORYL N-225 std. black to NORYL SE-I-701AA black.		
ECR0133	Contains all materials present in original qualification testing.			
ECR0155	Contains all materials present in original qualification testing.			

Configuration Code: The Configuration code is a suffix to the Model Number which provides a means of identification. When a significant product change is introduced, the Configuration code and specification sheets will be revised. (001, 002, 003, 004, etc.)

GRILON is a trademark of EMS-Chemie AG.
NORYL is a trademark of SABIC Innovative Plastics.
RYNITE and ZYTEL are trademarks of E.I. du Pont de Nemours and Company.

AGASTAT GP/ML/TR Series, 10 Amp Control Relay, Non-latching, Latching & Timing Versions

SERIES GP SERIES TR

Product Facts

- **Occupies very small panel space**
- **May be mounted singly, in continuous rows or in groups**
- **Available with screw terminal molded socket.**
- **4 SPDT contacts**
- **Magnetic blowout device option increases DC current carrying ability approximately ten times for both N.O. and N.C. contacts. In both AC and DC operation, the addition of the device will normally double the contact life, due to reduced arcing.**
- **File E15631, File LR29186**

Users should thoroughly review the technical data before selecting a product part number. It is recommended that users also seek out the pertinent approvals files of the agencies/laboratories and review them to ensure the product meets the requirements for a given application.

GP/ML/TR Design Features

Among the advances AGASTAT control relays offer over existing designs is a unique contact operating mechanism. An articulated arm assembly amplifies the movement of the solenoid core, allowing the use of a short stroke coil to produce an extremely wide contact gap. The long support arms used in conventional relays are eliminated. Both current capacity and shock/vibration tolerance are greatly increased, as well as life expectancy.

Design/Construction

AGASTAT control relays are operated by a moving core electromagnet whose main gap is at the center of the coil.

The coil provides a low mean turn length and also assists heat dissipation. Since the maximum travel of the electromagnet does not provide optimum contacts movement, an ingenious amplifying device has been designed.

This consists of a W-shaped mechanism, shown in Figure 1. When the center of the W is moved vertically the lower extremities move closer to each other as can be seen in the illustration. The center of the W mechanism is connected to the moving core of the electromagnet and the two lower points are connected to the moving contacts.

Two of these mechanisms are placed side-by-side to actuate the four contacts sets of the relay. These arms act as return springs for their corresponding contacts.

The mechanical amplification of the motion of the electromagnet permits a greater distance between the contacts, while the high efficiency of the electromagnet provides a nominal contact force in excess of 100 grams on the normally open contacts.

All the contacts are positioned well away from the cover and are well ventilated and separated from each other by insulating walls.

The absence of metal-to-metal friction, the symmetrical design of the contact arrangement and the lack of heavy impacts provides a mechanical life of 100,000,000 operations.

For use in AC circuits, the relay is supplied with a built-in rectification circuit, thus retaining the high DC efficiency of the electromagnet. The current peak on energizing is also eliminated and consequently the relay can operate with a resistance in series (e.g. for high voltages or for drop-out by shorting the coil). The use of the rectification circuit offers still other advantages. The same model can operated at frequencies ranging from 40 to 400 cycles. Operation of the relay is possible even with a low AC voltage.

The plastic dust cover has two windows to facilitate cooling and also to allow direct mounting of the relay.

Figure 1 — Illustration of Amplification

This diagram illustrates amplification obtained by the articulated operating mechanism.

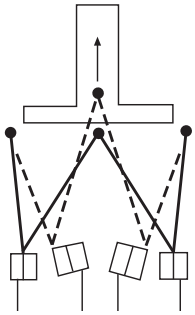

Note: Seismic & radiation tested EGP, EML and ETR models are available. Consult factory for detailed information.

Catalog 5-1773450-5
Revised 3-13

www.te.com

Dimensions are shown for reference purposes only. Specifications subject to change.

Dimensions are in millimeters unless otherwise specified.

USA: +1 800 522 6752
Asia Pacific: +86 0 400 820 6015
UK: +44 800 267 666

For additional support numbers please visit www.te.com

AGASTAT GP/ML/TR Series, 10 Amp Control Relay, Non-latching, Latching & Timing Versions (Continued)

GP/ML Contact Data @ 25°C

Arrangements — 4 Form C (4PDT)

Material — Silver plated

Expected Life —
Mechanical — 100 million operations
Electrical — See chart and graph

Contact Ratings and Expected Life

Voltage	Current (Amps)	Power Factor or Time Constant	Number of Electrical Operations	Remarks
540 VAC	3	COS Ø = 0.5	15,000	2 contacts in series
380 VAC	15	Resistive	10,000	2 contacts in parallel
380 VAC	10	Resistive	200,000	
380 VAC	3 x 3.3	COS Ø = 0.8	200,000	3hp motor
220 VAC	20	Resistive	20,000	2 contacts in parallel
220 VAC	15	COS Ø = 0.5	20,000	2 contacts in parallel
220 VAC	10	Resistive	400,000	
220 VAC	3 x 6	COS Ø = 0.8	200,000	3 hp motor
220 VAC	5		1,500,000	Filament lamps
220 VAC	5	Resistive	3,000,000	
220 VAC	2.5	COS Ø = 0.25	2,000,000	
220 VAC	2	Resistive	15,000,000	
220 VAC	1.25	Resistive	30,000,000	
120 VDC	1.5	Resistive	20,000,000	with blow-out device
48 VDC	10	Resistive	1,000,000	
48 VDC	1.5	5 ms	18,000,000	

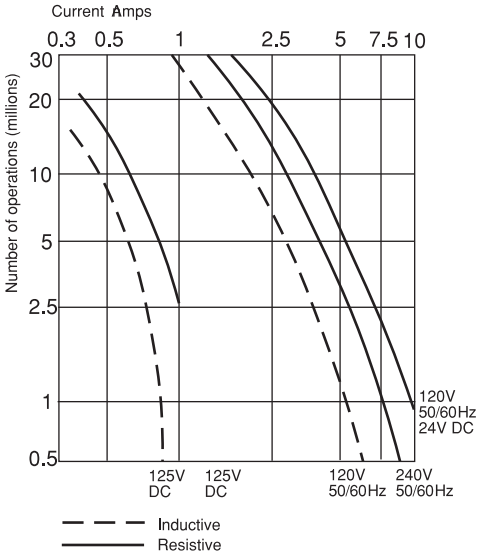

Load Life Curve

Initial Dielectric Strength —
Between non-connected terminals — 2,000V rms, 60 Hz
Between non-connected terminals & relay yoke — 2,000V rms, 60 Hz

Initial Insulation Resistance —
Between non-connected terminals — 109 ohms at 500VDC
Between non-connected terminals & relay yoke — 109 ohms at 500VDC

Coil Data

Voltage — 24, 120 & 220VAC, 60 Hz; Add series resistor for 380-440VDC; 12, 24, 48, 125 & 250VDC

Duty Cycle — Continuous

Nominal Coil Power —
6VA for AC coils; 6W for DC coils. There is no surge current during operation.

Coil Operating Voltage

	DC					AC, 50/60Hz		
Nominal Coil Voltage	12	24	48	125	250	24	120	220
Minimum Pick-up Voltage at 20°C	9	18	36	94	187	19	92	175
Minimum Pick-up Voltage at 40°C	9.5	19	38	100	200	20	102	188
Maximum voltage for continuous use	13.5	27	53	143	275	27	137	245

For 380VAC – Use 6800 ohms 4 watt resistor in series with 220VAC relay.

For 440VAC – Use 8200 ohms 6 watt resistor in series with 220VAC relay.

Drop-out voltage is between 10% and 40% of the nominal voltages for both DC and AC (For example: in a 120 VAC unit, drop-out will occur between 12 and 48 volts.) DC relays will function with unfiltered DC from a full-wave bridge rectifier.

Operate Data @ 20°C

Operate Time at Rated Voltage —
Between energizing and opening of normally closed contacts — less than 18 milliseconds on AC and less than 15 milliseconds on DC.

Release Time —
Between energizing and closing of normally open contacts — less than 35 milliseconds on AC and less than 30 milliseconds on DC.
Between de-energizing and opening of normally open contacts — less than 70 milliseconds on AC and less than 8 milliseconds on DC.
Between de-energizing and closing of normally closed contacts — less than 85 milliseconds on AC and less than 25 milliseconds on DC.

Environmental Data

Operating Temperature Range: 0°C to +60°C.

Vibration: Single axis fragility curve data are available on request at frequencies from 5 Hz. to 33 Hz.

Shock: The relay, when kept energized by means of one of its own contact sets, will withstand 40g shock load when operating on DC, and 150g shock load on AC.

Mechanical Data

Mounting Terminals —
16 flat base pins. Screw terminal sockets are available.

Wire Connection — The 16 flat pins are arranged in four symmetrical rows of four pins; the pitch in both directions being .394". Connection may be made to the relay by soldering. Sockets are available with screw terminals.

The internal wiring of the relay is also symmetrical as shown in the adjacent figure, allowing the relay to be inserted into the socket in either of two positions. Terminals B2 and B3 are provided as extra connections for special applications.

Weight —
10.9 oz. (308g) approximately

Catalog 5-1773450-5
Revised 3-13

www.te.com

Dimensions are shown for reference purposes only. Specifications subject to change.

Dimensions are in millimeters unless otherwise specified.

USA: +1 800 522 6752
Asia Pacific: +86 0 400 820 6015
UK: +44 800 267 666

For additional support numbers please visit www.te.com

AGASTAT GP/ML/TR Series, 10 Amp Control Relay, Non-latching, Latching & Timing Versions (Continued)

Ordering Information

Typical Part No. ➤	GP	I	N

1. Basic Series:
GP = Non-latching Control Relay
ML = Magnetic Latching Control Relay

2. Coil Voltage:

A = 12VDC	G = 24VAC, 60 Hz.
B = 24VDC	I = 120VAC, 60 Hz.
C = 48VDC	J = 220VAC, 60 Hz.
D = 125VDC	
F = 250VDC	

3. Options:
N = Magnetic Blow-out Device
Q = Light to indicate coil energization (GP only. 120VAC, 125VDC, 220VAC and 250VDC voltages only.)
R = Internal diode to suppress coil de-energization transient. (GP only. When used on DC unit, relay release time increases to same value as AC unit).

Our authorized distributors are more likely to maintain the following items in stock for immediate delivery.

GPD
GPDN

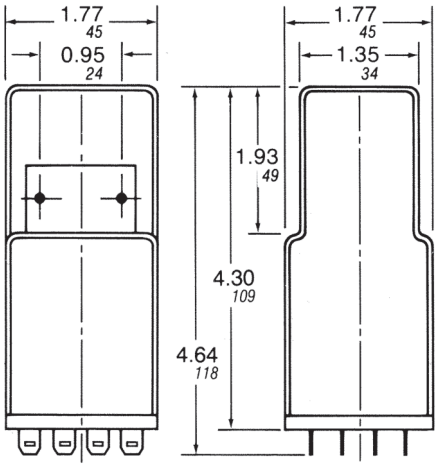

Outline Dimensions

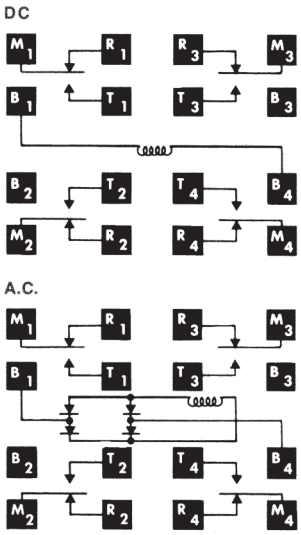

Wiring Diagrams (Bottom Views)

Catalog 5-1773450-5
Revised 3-13

www.te.com

Dimensions are shown for reference purposes only. Specifications subject to change.

Dimensions are in millimeters unless otherwise specified.

USA: +1 800 522 6752
Asia Pacific: +86 0 400 820 6015
UK: +44 800 267 666

For additional support numbers please visit www.te.com

AGASTAT GP/ML/TR Series, 10 Amp Control Relay, Non-latching, Latching & Timing Versions (Continued)

TR Series

Product Facts

- **8 timing ranges**
- **4 SPDT contacts**
- **Magnetic blowout device option increases DC current carrying ability approximately ten times for both N.O. and N.C. contacts. In both AC and DC operation, the addition of the device will normally double the contact life, due to reduced arcing.**

TR Design/Construction

Couples an advanced electromechanical design with a field-proven solid-state timing network, an adaptation of the circuit used in the AGASTAT premium grade SSC Timer.

This unique circuit also eliminates the need for supplementary temperature-compensation components, affording unusual stability over a realistically broad operating temperature range. It also provides transient protection and protection against premature switching of the output contacts due to power interruption during timing.

Timing Specifications

Operating Mode —
On-Delay (Delay on energization)

Timing Adjustment —
Internal fixed or internal potentiometer

Timing Ranges —
.15 to 3 sec.
.55 to 15 sec.
1 to 30 sec.
2 to 60 sec.
4 to 120 sec.
10 to 300 sec.
1 to 30 min.
2 to 60 min.

Accuracy —
Repeat — ±2% as fixed temperature and voltage
Overall — ±5% over combined rated extremes of temperature and voltage

Reset Time — 75ms.

Contact Data @ 25°C

Arrangements — 4 Form C (4PDT)

Nominal Rating — 10A @ 120VAC

Contact Pressure —
Between movable and normally closed contacts — 30 g, typical.
Between movable and normally open contacts — 100 g, typical.

Expected Life —
Mechanical — 100 million operations
Electrical — See load/life graph

Initial Dielectric Strength —
Between terminals and case and between mutually-isolated contacts — 2,000VAC

Initial Insulation Resistance —
Between non-connected terminals — 109 ohms at 500VDC
Between non-connected terminals & relay yoke — 109 ohms at 500VDC

Coil Data

Voltage — 120VAC, 50-60 Hz.; 24 & 125VDC

Transient Protection —
1,500 volt transient of less than 100 microseconds, or 1,000 volts or less

Environmental Data

Operating Temperature Range —
0°C to +50°C

Mechanical Data

Mounting Terminals —
16 flat base pins. Screw terminal sockets are available.

Weight — 11 oz. (311g) approximately.

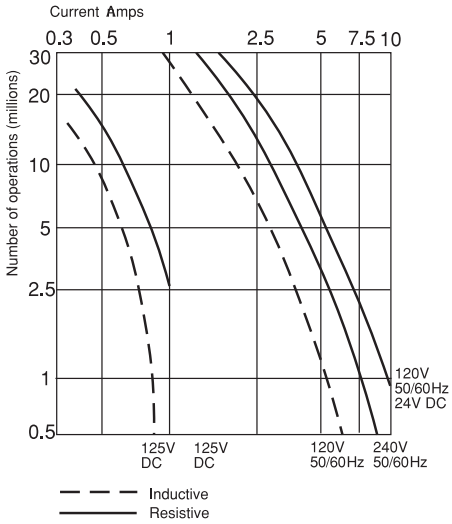

Load Life Curve

Ordering Information

Typical Part No. ➤	TR	1	4	B	1	A	N

1. Basic Series:
TR = Timing control relay

2. Operation:
1 = On-delay

3. Output:
4 = 4PDT (4 form C)

4. Operating Voltage:
B = 24VDC D = 215VDC I = 120VAC, 50/60 Hz.

5. Timing Adjustment:
1 = Internal fixed. 3 = Internal potentiometer.

6. Timing Range:
A = .15 to 3 sec. C = 1 to 30 sec. E = 4 to 120 sec. I = 2 to 60 min.
B = .55 to 15 sec. D = 2 to 60 sec. G = 10 to 300 sec. N = 1 to 30 min.

7. Options:
N = Magnetic blow-out device.

Our authorized distributors are more likely to maintain the following items in stock for immediate delivery.

None at present.

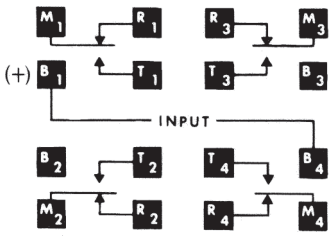

Wiring Diagram (Bottom View)

For Outline Dimensions see page 12-30

Dimensions are shown for reference purposes only. Specifications subject to change.

Dimensions are in millimeters unless otherwise specified.

USA: +1 800 522 6752
Asia Pacific: +86 0 400 820 6015
UK: +44 800 267 666

For additional support numbers please visit www.te.com

AGASTAT GP/ML/TR Series, 10 Amp Control Relay, Non-latching, Latching & Timing Versions (Continued)

Accessories for GP/ML/TR Series Control Relays

Front Connected Sockets

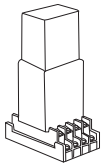

Cat. No. CR0001
With captive clamp terminals

Cat. No. CR0002
With (#6) binding head screws

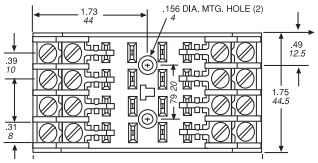

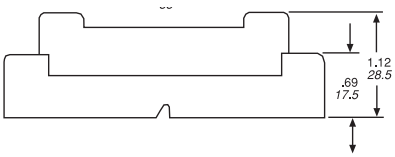

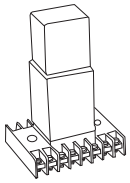

Cat. No. CR0095
With (#6) screw terminals

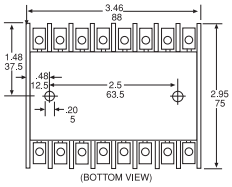

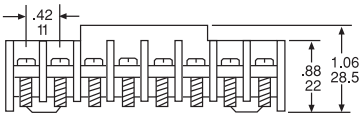

Cat. No. CR0067
With (#6) screw terminals

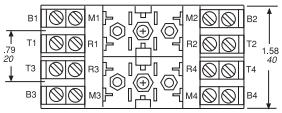

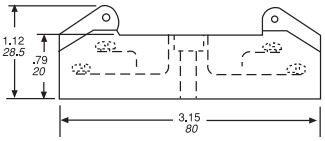

Hold Down (Locking) Springs

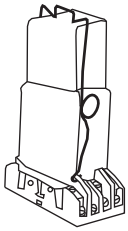

Cat. No. CR0069
For socket: CR0067

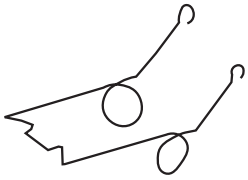

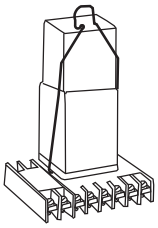

Cat. No. CR0070
For socket: CR0095

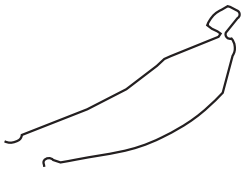

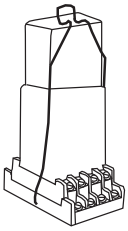

Cat. No. CR0111
For sockets: CR0001& CR0002

Heavy-duty Hold Down (Locking) Straps

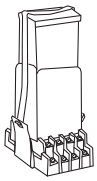

***Cat. No. CR0133**
For socket: CR0001 & CR0002

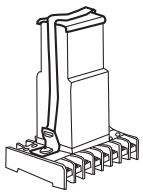

***Cat. No. CR0155**
For socket: CR0095

* Catalog number includes strap, strap plate and necessary brackets.

Magnetic Blowout Device

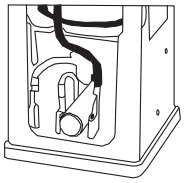

Cat. No. CR0190
Reduces arcing on the relay contacts when they make or break contact, either upon energizing or de-energizing, resulting in less contact degradation. Extends the life of the contact.

Extracting Handle

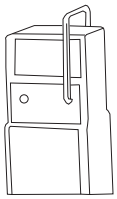

Cat. No. CR0179
Used to remove GP, ML and TR units from mounting bases.

Catalog 5-1773450-5
Revised 3-13

www.te.com

Dimensions are shown for reference purposes only. Specifications subject to change.

Dimensions are in millimeters unless otherwise specified.

USA: +1 800 522 6752
Asia Pacific: +86 0 400 820 6015
UK: +44 800 267 666

For additional support numbers please visit www.te.com

VCA Series, Single Phase, Undervoltage Relay

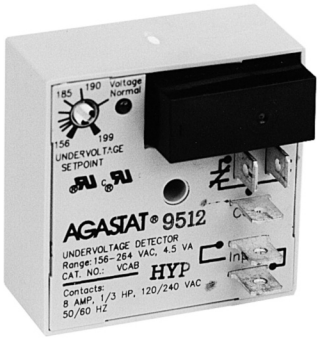

Product Facts

- **Automatic reset minimizes equipment downtime**
- **Fixed pickup point prevents low voltage start-up**
- **Adjustable dropout point protects against undervoltage operation**
- **Delayed dropout prevents nuisance tripping**
- **Compact, inexpensive design saves space, reduces cost**
- **Solid state circuitry for enhanced accuracy and long life**
- **LED indicates normal voltage condition**
- **File E60363**

Function

Single phase undervoltage relay

Sensing Specifications

Voltage Set-Point Adjustment — Internal potentiometer (screwdriver adjustable) with linear calibrated dial

Response Time — Depending on severity of undervoltage: 0.1 - 1 sec.

Accuracy —
Repeat Accuracy — ±0.2%
Overall Accuracy — ±1%

Output Data

Arrangement — 1 Form C (SPDT)

Rating — 7A @ 250VAC; 1/6 HP @ 250VAC; 300VA @ 120/240VAC; 3A @ 30VDC

Expected Mechanical Life — 10,000,000 operations

Expected Electrical Life — 100,000 operations at rated resistive load

Initial Dielectric Strength —
Between Terminals and Case — 1,480V
Between Relay Contacts and Active Circuitry — 1,480V

Input Data

Voltage — 120VAC, 240VAC

Power Requirement — 4W max.

Transient Protection —
120VAC . . . . . 30 joules
240VDC . . . . . 30 joules
120VAC . . . . . 10 joules
120VDC . . . . . 10 joules

Environmental Data

Temperature Range —
Storage — -40°C to +85°C
Operating — -23°C to +55°C

Mechanical Data

Mounting — Panel mount with one #8 screw

Termination — 0.250 in (6.35) quick connect terminals

Status Indication — LED indicates normal voltage condition

Weight — 3.2 oz. (90.7g) approximately

Ordering Information

Part Number	Operating Voltage
VCAA	120VAC
VCAB	240VAC

Authorized distributors are likely to stock the following:

None at present.

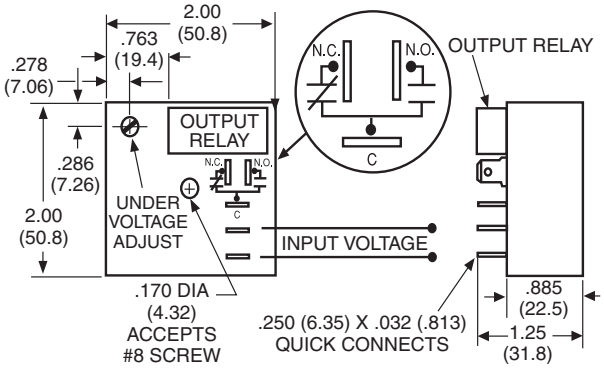

Outline Dimensions and Wiring Diagram

Users should thoroughly review the technical data before selecting a product part number. It is recommended that user also seek out the pertinent approvals files of the agencies/laboratories and review them to ensure the product meets the requirements for a given application.

Catalog 5-1773450-5
Revised 3-13

www.te.com

Dimensions are shown for reference purposes only. Specifications subject to change.

Dimensions are in millimeters unless otherwise specified.

USA: +1 800 522 6752
Asia Pacific: +86 0 400 820 6015
UK: +44 800 267 666

For additional support numbers please visit www.te.com

VMA series, Single Phase, Plug-in, Undervoltage Relay

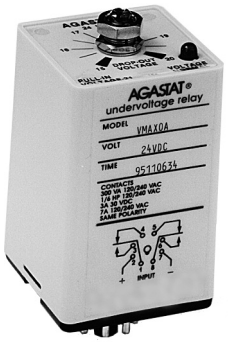

Product Facts

- **Automatic reset minimizes equipment downtime**
- **Fixed pickup point prevents low voltage start-up**
- **Adjustable dropout point protects against undervoltage operation**
- **Locking potentiometer maintains selected set point**
- **Delayed dropout prevents nuisance tripping**
- **Plug-in mounting for easier installation**
- **Built-in protection against polarity reversal**
- **LED indicates normal voltage condition**
- **File E60363**

Function

Single phase undervoltage relay

Sensing Specifications

Voltage Set-Point Adjustment — Locking potentiometer with calibrated dial

Response Time — Standard 0.5 sec. delay on dropout

Accuracy —
Repeat Accuracy — ±0.5% under fixed conditions
Overall Accuracy — ±1%

Temperature Coefficient — ±0.02%/°C (Max.)

Output Data

Arrangement — 2 Form C (DPDT)

Rating — 7A @ 250VAC; 1/6 HP @ 250VAC; 300VA @ 120/240VAC; 3A @ 30VDC

Expected Mechanical Life — 10,000,000 operations

Expected Electrical Life — 100,000 operations at rated resistive load

Initial Dielectric Strength —
Between Terminals and Case — 1,480V
Between Relay Contacts and Active Circuitry — 1,480V

Input Data

Voltage — See ordering information.

Power Requirement — 4W max.

Transient Protection —
24VAC . . . . . 1.5 joules
24VDC . . . . . 1.5 joules
48VDC . . . . . 10 joules
120VAC . . . . . 10 joules
125VDC . . . . . 10 joules
240VDC . . . . . 20 joules

Reverse Polarity Protection — On DC models

Duty Cycle — Continuous

Environmental Data

Temperature Range —
Storage — -30°C to +60°C
Operating — -10°C to +55°C

Mechanical Data

Mounting — Octal plug. Fits 27E122 or 27E891 (snap-on) screw terminal socket. Order socket separately.

Enclosure — Nylon cover protects against particles.

Status Indication — LED indicates normal voltage condition.

Weight — 6 oz. (168g) approximately.

Ordering Information

Part Number	Nominal Voltage	Pick-Up (V)	Drop-Out Range (V)
VMAXEA	24VAC	21	15 to 20
VMAXAA	120VAC	104	78 to 99
VMAXBA	240VAC	209	156 to 199
VMAXOA	24VDC	21	15 to 20
VMAXNA	48VDC	42	31 to 40
VMAXPA	125VDC	109	81 to 103

Authorized distributors are likely to stock the following:

None at present.

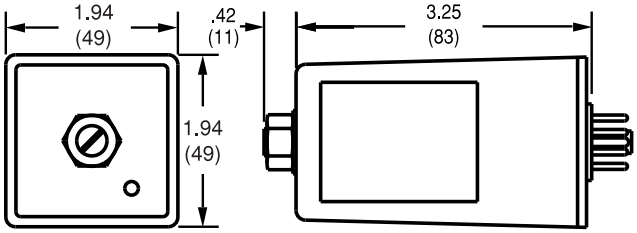

Outline Dimensions

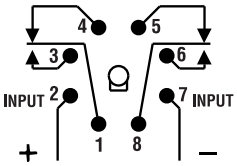

Wiring Diagram (Bottom View)

Users should thoroughly review the technical data before selecting a product part number. It is recommended that user also seek out the pertinent approvals files of the agencies/laboratories and review them to ensure the product meets the requirements for a given application.

Catalog 5-1773450-5
Revised 3-13

www.te.com

Dimensions are shown for reference purposes only. Specifications subject to change.

Dimensions are in millimeters unless otherwise specified.

USA: +1 800 522 6752
Asia Pacific: +86 0 400 820 6015
UK: +44 800 267 666

For additional support numbers please visit www.te.com

SCB/SCC Series, Specification Grade Discrete Plug-in, Time Delay Relay

Product Facts

- **On-Delay, Off-Delay and Interval timing modes**
- **13 timing ranges from 0.1 sec. to 60 min.**
- **10A DPDT output contacts**
- **Knob, fixed or external timing adjustment.**
- **Rated for pilot duty**
- **Premium components**
- **File 3520, File E60363, File LR51332, File E60363 (SCC only)**

Timing Specifications

Timing Modes —
On-Delay, Off-Delay and Interval

Timing Ranges — 6 to 180 cycles; 0.1 to 3 / 0.1 to 10 / 0.33 to 10 / 1 to 30 / 4 to 120 sec.; 0.33 to 10 / 1 to 30 / 2 to 60 min.; 0.33 to 10 hr. (All are +5%, –0% of maximum values).

Timing Adjustment —
Knob or fixed time (internal fixed resistor) — all models; customer supplied external potentiometer or resistor — On-Delay and Interval models only.

Accuracy —
Repeat Accuracy — ±0.5% ±0.004 sec.
Overall Accuracy — ±2% max.

Reset Time — 25 ms.

Relay Operate Time —
Off-Delay mode — 30 ms;
Interval mode — 20 ms..

Relay Release Time —
On-Delay mode only — 15 ms.

Users should thoroughly review the technical data before selecting a product part number. It is recommended that user also seek out the pertinent approvals files of the agencies/laboratories and review them to ensure the product meets the requirements for a given application.

Contact Data @ 25°C

Arrangements — 2 Form C (DPDT)

Rating — 10A @ 28VDC or 120VAC, resistive; 1/3 HP @ 120/240VAC; 345VA. Same polarity.

Expected Mechanical Life — 10 million operations

Expected Electrical Life — 500,000 operations, min., at rated resistive load

Initial Dielectric Strength —
Between Terminals and Case — 1,000VAC plus twice the nominal voltage for one minute.

Input Data @ 25°C

Voltage — See Ordering Information section for details.

Power Requirement — 3W, max.

Transient Protection: Non-repetitive transients of the following magnitudes will not cause spurious operation of affect function and accuracy.

Operating Voltage	<0.1 ms	<1 ms
All except 12 & 24	3,000V	2,500
12 & 24	Consult Factory	

Environmental Data

Temperature Range —
Storage —
SCB and SCC — -40°C to +85°C
Operating —
SCB: -30°C to +65°C;
SCC: -30°C to +50°C

Mechanical Data

Mounting/Termination —
SCB — UL recognized. Optional 8- or 11-pin octal-type sockets may be ordered separately.
SCC — 8- or 11-pin octal type sockets supplied with timer. (Must be used to qualify as "UL Listed" device.)

Weight — SCB: 5.3 oz. (149g) approx.; SCC: 7.5 oz. (210g) approx.

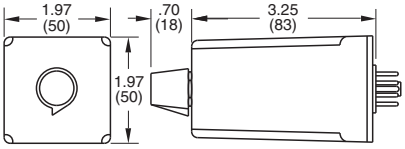

Outline Dimensions

Wiring Diagrams (Bottom Views)

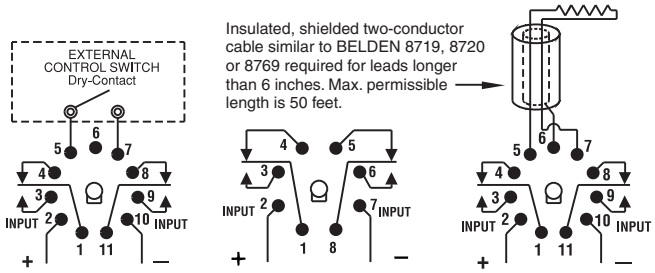

Off-Delay Fixed or Knob Adjust | **On-Delay & Interval Fixed or Knob Adjust** | **On-Delay & Interval External Potentiometer or Resistor Adjust**

Ordering Information (All "X's" must be included to complete part number)

SCB RX 01 2XX A A XA

Series SCB
Series SCC
Discrete Industrial Timer

Mounting Series SCB
RX = 8- or 11-pin socket (order separately)

Mounting Series SCC
LA = 8-pin socket p/n BCSA08SC for operating mode 01 or 03 with knob adjust or fixed time.
LC = 11-pin socket p/n BCSA11SC for operating mode 02; or 01 or 03 with external potentiometer or resistor.

Operating Mode
01 = On-Delay
02 = Off-Delay
03 = Interval

Output
2XX = DPDT Relay

Operating Voltage (+10%, –15%)
A = 120VAC, 50/60 Hz. / 120VDC
B = 240VAC, 50/60 Hz.
E = 24VAC, 50/60 Hz. / 24VDC
F = 48VAC, 50/60 Hz. / 48VDC
Q = 12VDC

Timing Range
A =0 .1 to 3 sec.
B = 0.5 to 15 sec.
C = 1 to 30 sec.
D = 2 to 60 sec.
E = 4 to 120 sec.
F = 6 to 180 sec.
G = 10 to 300 sec.
I = 2 to 60 min.
K = 3 to 180 cycles
L = 0.33 to 10 min.
M = 0.5 to 15 min.
N = 1 to 30 min.
P = 0.1 to 10 min.

Timing Adjustment
XA = Knob Adjust
XB = External Potentiometer or resistor (Operating modes 1 and 3 only).
XF =Fixed Times –Specify time delay in seconds per the following examples:
XF9.000 = 9 sec.
XF99.00 = 99 sec.
XF999.0 = 9999 sec.
XF1000 = 1000 sec.

Authorized distributors are likely to stock the following:

None at present.

BELDEN is a trademark of Belden Technologies, Inc.

Catalog 5-1773450-5
Revised 3-13

www.te.com

Dimensions are shown for reference purposes only. Specifications subject to change.

Dimensions are in millimeters unless otherwise specified.

USA: +1 800 522 6752
Asia Pacific: +86 0 400 820 6015
UK: +44 800 267 666

For additional support numbers please visit www.te.com

SCE Series, Specification Grade Discrete Plug-in, True Off-Delay Time Delay Relay

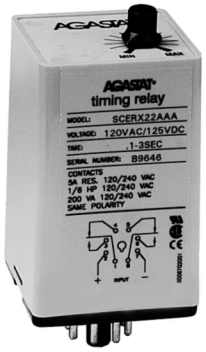

Product Facts

- **True Off-Delay timing modes**
- **Six time delays from 0.1 sec. to 10 min.**
- **10A SPDT or 5A DPDT output contacts**
- **Excellent repeat accuracy — typically better than ±1%**
- **8-pin octal plug.**
- **File E15631, File LR51332**

CAUTION: If unit has not been energized for several months, apply operating voltage for 20 minutes prior to initial time delay.

Timing Specifications

Timing Modes —
True Off-Delay — Upon application of operating voltage (min. 100ms), output relay contacts transfer. When operating voltage is removed, the time delay period is initiated. At the end of the delay period, output relay contacts release. If operating voltage is reapplied prior to expiration of the delay period, the delay will be cancelled and output relay contacts will remain transferred.

Timing Ranges —
0.1 to 3 / 0.5 to 15 / 1 to 30 / 4 to 120 / 10 to 300 sec.; 0.33 to 10 min.

Timing Adjustment —
Knob adjustment — Internal potentiometer with external knob adjustment. Maximum time calibrated with +10%, –0% of values shown below at rated voltage, at 68°F.
Fixed time — internal fixed resistor.

Users should thoroughly review the technical data before selecting a product part number. It is recommended that user also seek out the pertinent approvals files of the agencies/laboratories and review them to ensure the product meets the requirements for a given application.

Accuracy —
Repeat Accuracy — ±1
Overall Accuracy — ±5%

Reset Time — 30 ms. min.

Relay Operate Time — 30 ms.

Contact Data @ 25°C

Arrangements — 1 Form C (SPDT) and 2 Form C (DPDT)

Rating —
1 Form C — 10A @ 120/240VAC, resistive; 1/3 HP @ 120VAC; 345VA @ 120VAC; 1/4 HP @ 240VAC; 275VA @ 240VAC. Same polarity.
2 Form C — 5A @ 28VDC or 120/240VAC, resistive; 1/6 HP @ 120/240VAC; 200VA @ 120/240VAC. Same polarity.

Expected Mechanical Life — 10 million operations

Expected Electrical Life — 200,000 operations, min., at rated resistive load

Initial Dielectric Strength — Between Terminals and Case and relay contacts and active circuitry — 1,480VAC for one minute

Input Data @ 25°C

Voltage — See Ordering Information section for details

Power Requirement — 750mW

Transient Protection — 1,000V plus twice rated voltage for 0.1 ms

Environmental Data

Temperature Range —
Storage — -40°C to +85°C
Operating — -30°C to +65°C

Mechanical Data

Mounting/Termination — 8-pin octal plug fits either 27E122 or 27E891 (snap-on) socket (order separately)

Weight — 4 oz. (112g) approximately

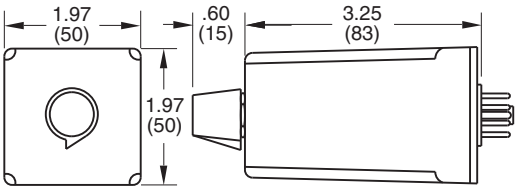

Outline Dimensions

Wiring Diagrams (Bottom Views)

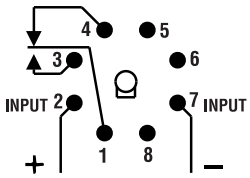

Fixed Time Or Knob Adjust

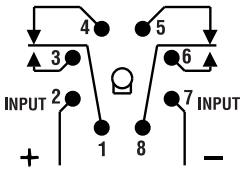

Fixed Time Or Knob Adjust

Ordering Information (All "X's" must be included to complete part number)

SCE R X 2 2 A C A

Series SCE
True Off-delay Timer

Agency Recognition
R = UL recognized

Output Rating
W = 10A (SPDT)
X = 5A (DPDT)

Operating Mode
2 = True Off-Delay

Output
1 = SPDT (W)
2 = DPDT (W)

Operating Voltage (+10%, –15%)
A = 120VAC, 50/60 Hz. / 125VDC
E = 24VAC, 50/60 Hz. / 24VDC
F = 48VAC, 50/60 Hz. / 48VDC

Timing Range
A =0 .1 to 3 sec.
B = 0.5 to 15 sec.
C = 1 to 30 sec.
E = 4 to 120 sec.
G = 10 to 300 sec.
L = 0.33 to 10 min.

Timing Adjustment
A = Knob Adjust
F = Fixed Times –Specify time delay in seconds per the following examples:
XF9.000 = 9 sec.
XF99.00 = 99 sec.
XF999.0 = 9999 sec.
XF1000 = 1000 sec.

Authorized distributors are likely to stock the following:

None at present.

Catalog 5-1773450-5
Revised 3-13

www.te.com

Dimensions are shown for reference purposes only. Specifications subject to change.

Dimensions are in millimeters unless otherwise specified.

USA: +1 800 522 6752
Asia Pacific: +86 0 400 820 6015
UK: +44 800 267 666

For additional support numbers please visit www.te.com

SCF Series, Programmable, Time Delay Relay

Product Facts

- **4 user-programmable timing modes**
- **0.1 sec. to 10 hr. programmable timing range**
- **Parameters set with recessed dials**
- **Narrow width saves panel space**
- **10A DPDT output relay**
- **Socket can be DIN-rail or back panel mounted**
- **File E15631(relay) and E140494 (socket)**
- **File LR29186 (relay) and LR29513M7 (socket)**

Users should thoroughly review the technical data before selecting a product part number. It is recommended that user also seek out the pertinent approvals files of the agencies/laboratories and review them to ensure the product meets the requirements for a given application.

Timing Modes

Modes are user selectable via screw-driver adjustment of recessed 4-position selector dial.

Modes offered are: On-Delay, Off-Delay, Interval and Latching Interval.

Timing Specifications

Timing Ranges — 0.1 to 3 / 0.33 to 10 / 1 to 30 / 4 to 120 sec.; 0.33 to 10 / 1 to 30 / 2 to 60 min.; 0.33 to 10 hr.

Timing Range Selection — Screwdriver select via recessed 8-position selector dial.

Timing Adjustment — External knob potentiometer adjustment with reference calibrations.

Accuracy —
Repeat Accuracy — ±1% ±0.01 sec.
Overall Accuracy — ±3% ±0.01 sec.

Reset Time — 30 ms.

Relay Operate Time — On-Delay and Interval mode: 55 ms.

Relay Release Time — Off-Delay, Interval and Latching Interval: 40 ms.

Contact Data @ 25°C

Arrangements — 2 Form C (DPDT).

Rating — 10A @ 28VDC or 120VAC, resistive; 1/3 HP @ 120/240VAC; 345VA.

Expected Mechanical Life — 10 million operations.

Expected Electrical Life — 500,000 operations, min., at rated resistive load.

Initial Dielectric Strength — Between Terminals and Case — 1,000VAC plus twice the nominal voltage for one minute.

Input Data @ 25°C

Voltage — See Ordering Information section for details.

Power Requirement — 2W, max.

Transient Protection — Non-repetitive transients of the following magnitudes will not cause spurious operation of affect function and accuracy.

Operating Voltage	<0.1 ms	<1 ms
12VDC	1,000V	240V*
24VAC/VDC	1,000V	240V*
48 VAC/VDC	1,000V	480V*
120 VAC, 125VDC	3,000V	2,500V*
240VAC/VDC	3,000V	2,500V*

*Minimum source impedance of 100 ohm

Environmental Data

Temperature Range —
Storage — -40°C to +85°C.
Operating — -30°C to +65°C.

Mechanical Data

Mounting/Termination — 11-pin octal-type plug for use with mating socket. Mount relay in horizontal position (pins horizontal, knob down, LEDs up).

Status Indication — Power On LED and Output Contacts LED.

Weight — Relay: 3.5 oz. (156g) approx.; Socket: 1.7 oz. (48.3g) approx.

Outline Dimensions

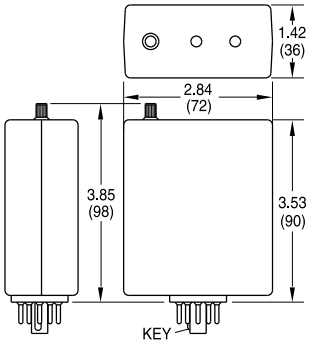

SCF Timer

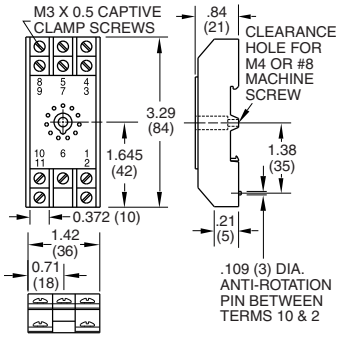

BCSF11SC Socket

Ordering Information (All "X's" must be included to complete part number)

SCF RX 90 2 A A

Series SCF
Plug-In Programmable Timer

Operating Mode
90 = Multiple Modes
On-Delay
Off-Delay
Interval
Latching Interval

Output Rating
A = 10 Amp
B = 5 Amp

Mounting
RX = Without Socket
RF = With Socket

Output
2 = DPDT Relay

Operating Voltage (+10%, –15%)
A = 120VAC, 50/60 Hz. / 125VDC
B = 240VAC, 50/60 Hz. §
E = 24VAC, 50/60 Hz. / 24VDC
F = 48VAC, 50/60 Hz. / 24VDC
Q = 12VDC

§ Voltage Option B is only available with 5 Amp output option.

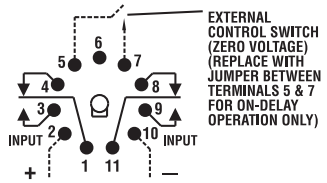

Wiring Diagram (Bottom View)

Authorized distributors are likely to stock the following:

None at present.

Catalog 5-1773450-5
Revised 3-13

www.te.com

Dimensions are shown for reference purposes only. Specifications subject to change.

Dimensions are in millimeters unless otherwise specified.

USA: +1 800 522 6752
Asia Pacific: +86 0 400 820 6015
UK: +44 800 267 666

For additional support numbers please visit www.te.com

SRC Series, Specification Grade Repeat Cycle, Plug-in Time Delay Relay

Product Facts

- **Repeat Cycle timing mode**
- **Dual knobs for user adjustment of on and off times**
- **13 timing ranges from 0.1 sec. to 60 min.**
- **10A DPDT output contacts**
- **Exceptional immunity to line transients and noise**
- **Premium components enhance reliability**
- **Superior reset time of 24 msec.**

Users should thoroughly review the technical data before selecting a product part number. It is recommended that user also seek out the pertinent approvals files of the agencies/laboratories and review them to ensure the product meets the requirements for a given application.

Timing Specifications

Timing Modes —

Repeat Cycle: Application of line voltage starts the pre-set OFF-time period Upon expiration of the period, the output relay is energized, its contacts transfer, and the pre-set ON-time period begins. At the end of this period the output relay is deenergized, and a new cycle begins. The OFF and ON cycles continue until power is removed. To reset the timer, input voltage must be removed for at least 25 ms.

Timing Ranges — OFF time and ON time ranges need not be the same. 6 to 180 cycles; 0.1 to 3 / 1 to 10 / 0.5 to 15 / 1 to 30 / 2 to 60 / 4 to 120 / 6 to 180 / 10 to 300 sec.; 0.33 to 10 / 0.5 to 15 / 1 to 30 / 2 to 60 min. (All are +10%, –1% of maximum values).

Timing Adjustment — Two internal potentiometers with external knobs.

Accuracy —
Repeat Accuracy — ±1% ±0.004 sec.
Overall Accuracy — ±2.25% max.

Reset Time — 25 ms. max. (between deenergization and reenergization without affecting accuracy.)

Relay Operate Time — 20 ms.

Relay Release Time — 15 ms.

Contact Data @ 25°C

Arrangements — 2 Form C (DPDT).

Rating — 10A @ 28VDC or 120VAC, resistive; 1/3 HP @ 120/240VAC.

Expected Mechanical Life — 10 million operations

Expected Electrical Life — 500,000 operations, min., at rated resistive load.

Initial Dielectric Strength — Between Terminals & Case and Mutually Isolated Contacts — 1,480VAC.

Input Data @ 25°C

Voltage — See Ordering Information section for details.

Power Requirement — 3W max.

Transient Protection — Non-repetitive transients of the following magnitudes will not cause spurious operation of affect function and accuracy.

Operating Voltage	<0.1 ms	<1 ms
12VDC	1,000V	240V*
12VDC	1,000V	240V*
24VAC/VDC	1,000V	240V*
48 VAC/VDC	1,000V	480V*
120 VAC/VDC	3,000V	2,500V*
240VAC	3,000V	2,500V*

*Minimum source impedance of 100 ohm

Environmental Data

Temperature Range —
Storage — -40°C to +85°C
Operating — -30°C to +65°C

Mechanical Data

Mounting/Termination —
Quick connect terminals fit either 27E121 or 27E893 (snap-on) socket (order separately)

Weight — 5.3 oz. (149g) approximately

Ordering Information

SRC 7 2 A C C A

Series SRC
Repeat Cycle Timer.

Operating Mode
7= Repeat Cycle

Output
2 = DPDT Relay

Operating Voltage (+10%, –15%)
A = 120VAC, 50/60 Hz. / 120VDC
B = 240VAC, 50/60 Hz.
E = 24VAC, 50/60 Hz. / 24VDC
F = 48VAC, 50/60 Hz. / 48VDC
Q = 12VDC

Timing Range Off-Time
A =0 .1 to 3 sec.
B = 0.5 to 15 sec.
C = 1 to 30 sec.
D = 2 to 60 sec.
E = 4 to 120 sec.
F = 6 to 180 sec.
G = 10 to 300 sec.
I = 2 to 60 min.
K = 3 to 180 cycles
L = 0.33 to 10 min.
M = 0.5 to 15 min.
N = 1 to 30 min.
P = 0.1 to 10 sec.

Timing Range On-Time
A =0 .1 to 3 sec.
B = 0.5 to 15 sec.
C = 1 to 30 sec.
D = 2 to 60 sec.
E = 4 to 120 sec.
F = 6 to 180 sec.
G = 10 to 300 sec.
I = 2 to 60 min.
K = 3 to 180 cycles
L = 0.33 to 10 min.
M = 0.5 to 15 min.
N = 1 to 30 min.
P = 0.1 to 10 sec.

Timing Adjustment
A = Dual Knob Adjust

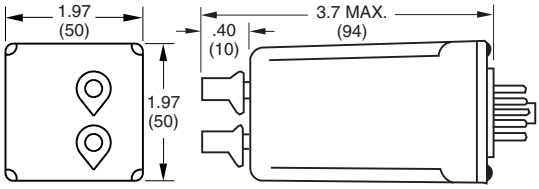

Outline Dimensions

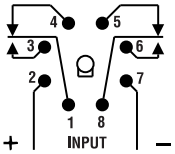

Wiring Diagram (Bottom View)

Authorized distributors are likely to stock the following:

None at present.

Catalog 5-1773450-5
Revised 3-13

www.te.com

Dimensions are shown for reference purposes only. Specifications subject to change.

Dimensions are in millimeters unless otherwise specified.

USA: +1 800 522 6752
Asia Pacific: +86 0 400 820 6015
UK: +44 800 267 666

For additional support numbers please visit www.te.com

SSC Series, Specification Grade Discrete Plug-in, Time Delay Relay

Product Facts

- **On-Delay, Off-Delay and Interval timing modes**
- **13 timing ranges from 0.1 sec. to 60 min.**
- **10A DPDT output contacts**
- **Excellent repeatability of ±1% or better.**
- **Exceptional immunity to transients and noise.**
- **Wide operating temperature range.**
- **File 3520, File LR29186**

Users should thoroughly review the technical data before selecting a product part number. It is recommended that user also seek out the pertinent approvals files of the agencies/laboratories and review them to ensure the product meets the requirements for a given application.

Timing Specifications

Timing Modes —
On-Delay, Off-Delay and Interval.

Timing Ranges — 6 to 180 cycles; 0.1 to 3 / 0.1 to 10 / 0.33 to 10 / 1 to 30 / 4 to 120 sec.; 0.33 to 10 / 1 to 30 / 2 to 60 min.; 0.33 to 10 hr. (All are +10%, –1% of maximum values).

Timing Adjustment — Knob or fixed time (internal fixed resistor) – all models; customer supplied external potentiometer or resistor – On-Delay and Interval models only.

Accuracy —
Repeat Accuracy — ±1% ±0.004 sec. at any combination of operating temperature and voltage.
Overall Accuracy — ±5.25% throughout operating temperature and voltage ranges.

Reset Time — 25 ms. (minimum deenergized interval for on-delay or off-delay models, or minimum required closure interval for interval models without affecting accuracy.)

Relay Operate Time — Off-Delay mode only: 35 ms.

Relay Release Time — On-Delay mode only: 20 ms.

Contact Data @ 25°C

Arrangements — 2 Form C (DPDT).

Rating — 10A @ 28VDC or 120VAC, resistive; 1/3 HP @ 120/240VAC.

Expected Mechanical Life — 10 million operations

Expected Electrical Life — 500,000 operations, min., at rated resistive load.

Initial Dielectric Strength — Between Terminals and Case — 1,000VAC plus twice the nominal voltage for one minute.

Input Data @ 25°C

Voltage — See Ordering Information section for details.

Power Requirement — 3W max.

Transient Protection —
Non-repetitive transients of the following magnitudes will not cause spurious operation of affect function and accuracy.

Operating Voltage	<0.1 ms	<1 ms
12VDC	1,000V	240V*
12VDC	1,000V	240V*
24VAC/VDC	1,000V	240V*
48 VAC/VDC	1,000V	480V*
120 VAC/VDC	3,000V	2,500V*
240VAC	3,000V	2,500V*

*Minimum source impedance of 100 ohm

Environmental Data

Temperature Range —
Storage — -40°C to +85°C
Operating — -30°C to +65°C

Mechanical Data

Mounting/Termination —
8- or 11-pin octal type plug. 8-pin types fit either 27E122 or 27E891, while 11-pin types fit 27E123 or 27E892.

Weight — 4 oz. (112g) approximately

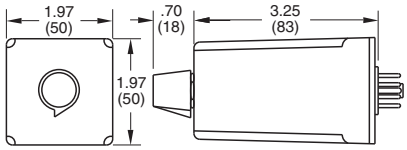

Outline Dimensions

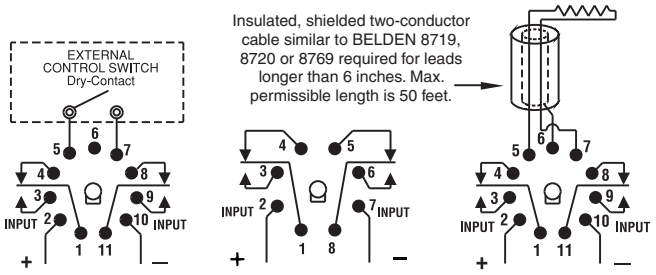

Off-Delay Fixed or Knob Adjust | **On-Delay & Interval Fixed or Knob Adjust** | **On-Delay & Interval External Potentiometer or Resistor Adjust**

Wiring Diagrams (Bottom Views)

BELDEN is a trademark of Belden Technologies, Inc.

Ordering Information

SSC 01 2 A A A

Series SSC
Discrete
Industrial
Timer

Operating Mode
01 = On-Delay
02 = Off-Delay
03 = Interval

Output
2 = DPDT Relay

Timing Range
A =0 .1 to 3 sec.
B = 0.5 to 15 sec.
C = 1 to 30 sec.
D = 2 to 60 sec.
E = 4 to 120 sec.
F = 6 to 180 sec.
G = 10 to 300 sec.
I = 2 to 60 min.
K = 3 to 180 cycles
L = 0.33 to 10 min.
M = 0.5 to 15 min.
N = 1 to 30 min.
P = 0.1 to 10 min.

Operating Voltage (+10%, –15%)
A = 120VAC, 50/60 Hz. / 120VDC
B = 240VAC, 50/60 Hz.
E = 24VAC, 50/60 Hz. / 24VDC
F = 48VAC, 50/60 Hz. / 48VDC
Q = 12VDC (±10%)

Timing Adjustment
A = Knob Adjust
B = External Potentiometer or resistor (Operating modes 1 and 3 only).
F = Fixed Times –Specify time delay in seconds per the following examples:
F9.000 = 9 sec.
F99.00 = 99 sec.
F999.0 = 9999 sec.
F1000 = 1000 sec.

Authorized distributors are likely to stock the following:

SSC12AAA	SSC12ACA	SSC12AGA
SSC12ABA	SSC12ADA	SSC12ALA

Catalog 5-1773450-5
Revised 3-13

www.te.com

Dimensions are shown for reference purposes only. Specifications subject to change.

Dimensions are in millimeters unless otherwise specified.

USA: +1 800 522 6752
Asia Pacific: +86 0 400 820 6015
UK: +44 800 267 666

For additional support numbers please visit www.te.com

SSF Series, Programmable Time Delay Relay

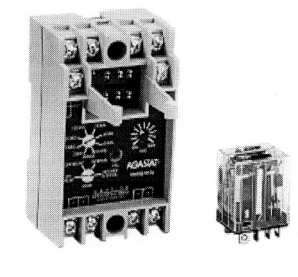

Product Facts

- **4 user-programmable timing modes**
- **0.1 sec. to 10 hr. programmable timing range**
- **Parameters set with recessed screwdriver dials**
- **Universal voltage (plug-in relay dependent)**
- **10A DPDT replaceable output relay minimizes downtime**
- **Front screw terminals**
- **DIN-rail, panel or machine tool track mount**
- **File E15631, File LR29186**

Users should thoroughly review the technical data before selecting a product part number. It is recommended that user also seek out the pertinent approvals files of the agencies/laboratories and review them to ensure the product meets the requirements for a given application.

Timing Specifications

Timing Modes —
Modes are user selectable via screwdriver adjustment of recessed 4-position selector dial.
Modes offered are: On-Delay, Off-Delay, Interval and Latching Interval.

Timing Ranges — 0.1 to 3 / 0.33 to 10 / 1 to 30 / 4 to 120 sec.; 0.33 to 10 / 1 to 30 / 2 to 60 min.; 0.33 to 10 hr.

Timing Range Selection — Screwdriver select via recessed 8-position selector dial.

Timing Adjustment — Recessed potentiometer adjustment with reference calibrations.

Accuracy —
Repeat Accuracy — ±1% ±0.01 sec.
Overall Accuracy — ±3% ±0.01 sec.

Reset Time — 30 ms.

Relay Operate Time — On-Delay and Interval mode: 30 ms.

Relay Release Time — Off-Delay, Interval and Latching Interval: 30 ms. (with factory-installed relay).

Contact Data @ 25°C

Arrangements — 2 Form C (DPDT).

Rating — 10A @ 28VDC or 120VAC, resistive; 1/3 HP @ 120/240VAC 345VA.

Expected Mechanical Life — 10 million operations (with factory-installed relay).

Expected Electrical Life — 500,000 operations, min., at rated resistive load (with factory-installed relay).

Initial Dielectric Strength — Between Coil/Control Switch and Contacts — 1,500VAC for one minute.

Input Data @ 25°C

Voltage — See Ordering Information section for details.

Power Requirement — 2W max.

Transient Protection —
Non-repetitive transients of the following magnitudes will not cause spurious operation of affect function and accuracy.

Operating Voltage	<0.1 ms	<1 ms
24, 48 VAC/VDC	1,000V	480V
120, 240VAC/VDC	3,000V	2500V*

* Min. source impedance of 100 ohm@120/240VAC, 3000V <0.1 , sec.Environmental Data

Environmental Data

Temperature Range —
Storage — -40°C to +85°C
Operating — -30°C to +65°C

Mechanical Data

Mounting/Termination — Panel, DIN-rail, Machine Tool mounting track mounting case with screw terminals.

Weight — 5.5 oz. (156g) approximately

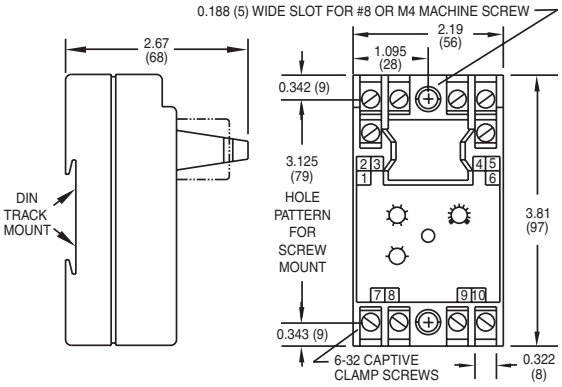

Outline Dimensions

Ordering Information

SSF	R	90	A
Series SSF Universal Timer	**R** = UL Recognized Component	**Operating Mode 90** Multiple modes - On-Delay Off-Delay Interval Latching Interval	**Operating Voltage** (+10%, –15%) A = 120VAC, 50/60 Hz. B = 240VAC, 50/60 Hz. E = 24VAC, 50/60 Hz. F = 48VAC, 50/60 Hz. N = 48VDC O =24VDC P = 125VDC X = No factory-installed relay.†

† Voltage determined by customer-supplied relay. Only relays that operate on the above-listed voltages should be used. Timer operation using other relay voltages is not recommended.

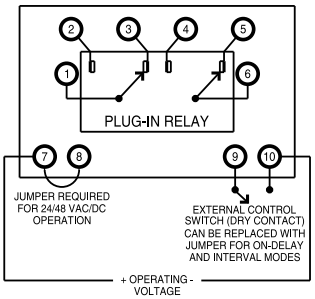

Wiring Diagram (Top View)

Authorized distributors are likely to stock the following:

SSFR90A
SSFR90X

Catalog 5-1773450-5
Revised 3-13

www.te.com

Dimensions are shown for reference purposes only. Specifications subject to change.

Dimensions are in millimeters unless otherwise specified.

USA: +1 800 522 6752
Asia Pacific: +86 0 400 820 6015
UK: +44 800 267 666

For additional support numbers please visit www.te.com

SST Series, Industrial Grade Discrete Plug-in, Time Delay Relay

Product Facts

- **On-Delay, Off-Delay, Interval, One Shot & Repeat modes**
- **Time delays to 120 min.**
- **Fast setting with time calibrated knobs**
- **Superior transient protection**
- **Rugged construction with 8- or 11-pin plug**
- **Flame retardant housing**
- **File E15631, File LR33434**

Timing Specifications

Timing Modes — On-Delay, Off-Delay, Interval, One Shot (Latching Interval) or Repeat Cycle.

Timing Ranges — Nine ranges spanning 0.1 sec. to 120 min.

Timing Adjustment — Knob adjust.

Accuracy —
Repeat Accuracy — ±1%
Overall Accuracy — ±5%

Reset Time — 50 ms., max., (25 ms typ.) for on-delay and interval; 300 ms, max., for off-delay and one shot; 500 ms, max., for repeat type.

Relay Operate Time — 50 ms.

Relay Release Time — 30 ms.

Contact Data @ 25°C

Arrangements — 2 Form C (DPDT)

Rating — 10A @ 120/240VAC, resistive; 1/3 HP @ 120/240VAC, 50/60 Hz.

Expected Mechanical Life — 10 million operations

Expected Electrical Life — 500,000 operations, min., at rated resistive load.

Initial Dielectric Strength — Between Contacts, Line Inputs and Control Circuits — 1,500V RMS, minimum, at 60 Hz.

Input Data @ 25°C

Voltage — See Ordering Information section for details.

Power Requirement — 3W max.

Transient Protection — Non-repetitive transients of the following magnitudes will not cause spurious operation of affect function and accuracy.

Operating Voltage	<0.1 ms	<1 ms
12VDC	1,000V	240V*
12 & 24 VAC/VDC	860V	208V*
120 VAC	2,580V	2,150V*

*Minimum source impedance of 100 ohm.

Environmental Data

Temperature Range —
Storage — -23°C to +71°C
Operating — -23°C to +54°C

Mechanical Data

Mounting/Termination — On-Delay, Interval and Repeat types have 8- pin octal plug that fits either 27E122 or 27E891 socket. Off-Delay and One Shot types have 11-pin octal-type plug that fits 27E123 or 27E892. Sockets must be ordered separately.

Weight — 4 oz. (112g) approximately

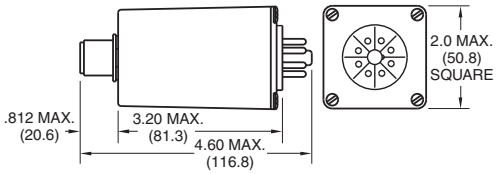

Outline Dimensions

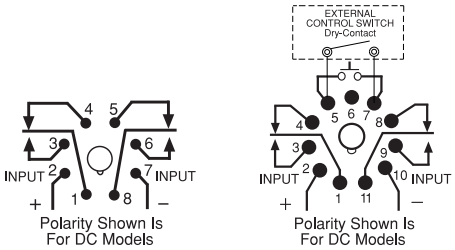

Wiring Diagrams (Bottom Views)

Ordering Information

SST1 – On Delay Types

Input	Time Range	Part No.
120 VAC	0.1 - 10 sec.	SST12AAA
	0.6 - 60 sec.	SST12ACA
	1.8 - 180 sec.	SST12ADA
	3 - 300 sec.	SST12AEA
	18 sec. - 30 min.	SST12AGA
	36 sec. - 60 min.	SST12AHA
24 VAC	0.1 - 10 sec.	SST12EAA
	1.8 - 180 sec.	SST12EDA
	3 - 300 sec.	SST12EEA
24 VDC	0.1 - 10 sec.	SST12OAA
	1.8 - 180 sec.	SST12ODA
	3 - 300 sec.	SST12OEA
12 VDC	0.1 - 10 sec.	SST12QAA
	1.8 - 180 sec.	SST12QDA
	3 - 300 sec.	SST12QEA

SST2 – Off Delay Types

Input	Time Range	Part No.
120 VAC	0.1 - 10 sec.	SST22AAA
	1.8 - 180 sec.	SST22ADA
	3 - 300 sec.	SST22AEA
	18 sec. - 30 min.	SST22AGA
	36 sec. - 60 min.	SST22AHA
24 VAC	0.1 - 10 sec.	SST22EAA
	1.8 - 180 sec.	SST22EDA
24 VDC	0.1 - 10 sec.	SST22OAA
	1.8 - 180 sec.	SST22ODA
12 VDC	0.1 - 10 sec.	SST22QAA
	1.8 - 180 sec.	SST22QDA

SST3 – Interval Types

Input	Time Range	Part No.
120 VAC	0.1 - 10 sec.	SST32AAA
	1.8 - 180 sec.	SST32ADA
	3 - 300 sec.	SST32AEA
	36 sec. - 60 min.	SST32AHA
24 VAC	0.1 - 10 sec.	SST32EAA
	1.8 - 180 sec.	SST32EDA
24 VDC	0.1 - 10 sec.	SST32OAA
	1.8 - 180 sec.	SST32ODA
12 VDC	0.1 - 10 sec.	SST32QAA
	1.8 - 180 sec.	SST32QDA

SST4 – One Shot* Types

Input	Time Range	Part No.
120 VAC	0.1 - 10 sec.	SST42AAA
	1.8 - 180 sec.	SST42ADA
	3 - 300 sec.	SST42AEA
	18 sec. - 30 min.	SST42AGA
	36 sec. - 60 min.	SST42AHA
24 VAC	0.1 - 10 sec.	SST42EAA
	1.8 - 180 sec.	SST42EDA
24 VDC	0.1 - 10 sec.	SST42OAA
	1.8 - 180 sec.	SST42ODA
12 VDC	0.1 - 10 sec.	SST42QAA
	1.8 - 180 sec.	SST42QDA

* Also known as Latching Interval

SST7 – Repeat Cycle Types

Input	Time Range	Part No.
120 VAC	0.1 - 10 sec.	SST72AAA
	1.8 - 180 sec.	SST72ADA
	3 - 300 sec.	SST72AEA
	18 sec. - 30 min.	SST72AGA
	36 sec. - 60 min.	SST72AHA
24 VAC	0.1 - 10 sec.	SST72EAA
	1.8 - 180 sec.	SST72EDA
24 VDC	0.1 - 10 sec.	SST72OAA
	1.8 - 180 sec.	SST72ODA
12 VDC	0.1 - 10 sec.	SST72QAA
	1.8 - 180 sec.	SST72QDA

Users should thoroughly review the technical data before selecting a product part number. It is recommended that user also seek out the pertinent approvals files of the agencies/laboratories and review them to ensure the product meets the requirements for a given application.

Authorized distributors are likely to stock the following:

None at present.

Catalog 5-1773450-5
Revised 3-13

www.te.com

Dimensions are shown for reference purposes only. Specifications subject to change.

Dimensions are in millimeters unless otherwise specified.

USA: +1 800 522 6752
Asia Pacific: +86 0 400 820 6015
UK: +44 800 267 666

For additional support numbers please visit www.te.com

STA Series, Specification Grade Discrete Plug-in, Time Delay Relay With QC Terminals

Product Facts

- **On-Delay, Off-Delay, Interval and Accumulating On-Delay timing modes**
- **13 timing ranges from 0.1 sec. to 48 hr.**
- **10A DPDT output contacts**
- **Knob, fixed or external timing adjustment**
- **QC plug-in terminals save space, two LEDs show status**
- **File 3520, File E60363, File LR51332**

Timing Specifications

Timing Modes — On-Delay, Off-Delay, Interval and Accumulating On-Delay.

Timing Ranges — 6 to 180 cycles; 0.1 to 3 / 0.5 to 15 / 1 to 30 / 2 to 60 / 4 to 120 / 6 to 180 / 10 to 300 sec.; 0.33 to 10 / 0.5 to 15 / 1 to 30 min.; 1 to 6 / 2 to 48 hr. (All are +5%, –0% of maximum values).

Timing Adjustment — Knob or fixed time (internal fixed resistor) – all models; customer supplied external potentiometer or resistor – On-Delay and Interval models only.

Accuracy —
Repeat Accuracy — ±.5% ±0.004 sec.
Overall Accuracy — ±2% throughout operating temperature and voltage ranges.

Reset Time — 30 ms. min. (between deenergization and reenergization without affecting accuracy.)

Relay Operate Time — Off-Delay mode: 35 ms.; Interval mode — 20 ms.

Relay Release Time — On-Delay and Accumulating On-Delay modes — 20 ms

Users should thoroughly review the technical data before selecting a product part number. It is recommended that user also seek out the pertinent approvals files of the agencies/laboratories and review them to ensure the product meets the requirements for a given application.

Contact Data @ 25°C

Arrangements — 2 Form C (DPDT).

Rating — 10A @ 28VDC or 120VAC, resistive; 1/3 HP @ 120/240VAC; 345VA. Same polarity.

Expected Mechanical Life — 10 million operations

Expected Electrical Life — 500,000 operations, min., at rated resistive load.

Initial Dielectric Strength — 1,000VAC plus twice the nominal voltage for one minute.

Input Data @ 25°C

Voltage — See Ordering Information section for details.

Power Requirement — 3W max.

Transient Protection — Non-repetitive transients of the following magnitudes will not cause spurious operation of affect function and accuracy.

Operating Voltage	<0.1 ms	<1 ms
All except 12 & 24	3,000V	2,500
12 & 24	Consult Factory	

Environmental Data

Temperature Range —
Storage — -40°C to +85°C
Operating — -30°C to +65°C

Mechanical Data

Mounting/Termination — Quick connect terminals fit either 27E121 or 27E893 (snap-on) socket (order separately).

Status Indication — Power On LED and Output Contacts LED (optional).

Weight — 4.2 oz. (119g) approximately.

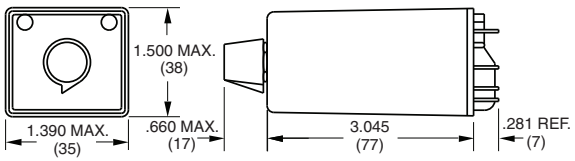

Outline Dimensions

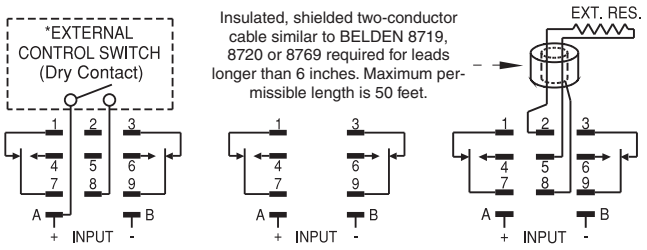

Off-Delay & Accumulating On-Delay Fixed or Knob Adjust

On-Delay & Interval Fixed or Knob Adjust

On-Delay & Interval External Potentiometer or Resistor Adjust

Wiring Diagrams (Bottom Views)

Ordering Information (All "X's" must be included to complete part number)

STA RX 01 2X S A A XA

Series STA
Discrete Industrial Timer With Tab-type Terms.

Mounting Series
RX = 11-pin tab-type header (order socket separately)

Operating Mode
01 = On-Delay
02 = Off-Delay
03 = Interval
09 = Accumulating On-Delay

Output
2X = DPDT Relay

Status Indication
S = LEDs
X = No LEDs

Operating Voltage (+10%, –15%)
A = 120VAC, 50/60 Hz. / 120VDC
E = 24VAC, 50/60 Hz. / 24VDC
F = 48VAC, 50/60 Hz. / 48VDC
Q = 12VDC

Timing Range
A =0 .1 to 3 sec.
B = 0.5 to 15 sec.
C = 1 to 30 sec.
D = 2 to 60 sec.
E = 4 to 120 sec.
F = 6 to 180 sec.
G = 10 to 300 sec.
I = 2 to 60 min.
J = 1 to 6 hr.
K = 3 to 180 cycles
L = 0.33 to 10 min.
M = 0.5 to 15 min.
N = 1 to 30 min.
R = 2 to 48 hr.

Timing Adjustment
XA = Knob Adjust
XB = External Potentiometer or resistor (Operating modes 1 and 3 only).
XF =Fixed Times –Specify time delay in seconds per the following examples:
XF9.000 = 9 sec.
XF99.00 = 99 sec.
XF999.0 = 9999 sec.
XF1000 = 1000 sec.

Authorized distributors are likely to stock the following:

None at present.

BELDEN is a trademark of Belden Technologies, Inc.

Catalog 5-1773450-5
Revised 3-13

www.te.com

Dimensions are shown for reference purposes only. Specifications subject to change.

Dimensions are in millimeters unless otherwise specified.

USA: +1 800 522 6752
Asia Pacific: +86 0 400 820 6015
UK: +44 800 267 666

For additional support numbers please visit www.te.com

VTM1 Series, On-Delay, Timing Module

Product Facts

- **On-delay timing mode**
- **Reliable solid state timing circuitry**
- **Excellent transient protection**
- **Compact design**
- **Flame retardant, solvent resistant housing**
- **File E60363, File LR33434**

Timing Specifications

Timing Mode — On-Delay

Timing Ranges — 0.5 to 10 / 3 to 60 sec.; 0.5 to 10 / 3 to 60 min.

Timing Range Selection — Screwdriver select via recessed 8-position selector dial.

Timing Adjustment — External resistor or potentiometer. An external resistance of 1 megohm is required to obtain the maximum time for all ranges. To determine the actual resistance needed to obtain the required time delay, use the following formula:

$$R_T = \frac{(T_{REQ} - T_{MIN})}{T_{MAX} - T_{MIN}} \times 1{,}000{,}000 \text{ ohms}$$

Accuracy —
Repeat Accuracy — ±1%
Overall Accuracy — ±2% at R = 1 megohm

Reset Time — 100 ms, max., before time-out; 10 ms, max., after time-out.

Output Switch Data

Arrangement — Solid state 1 Form A (SPST-NO)

Rating — 1A, inductive, at nominal operating voltage.

Expected Electrical Life — 10,000,000 operations at rated load.

Initial Dielectric Strength —
Between Terminals and Mounting — 3,000VAC rms.
Between Input and Output — 1,500VAC rms.

Input Data @ 25°C

Voltage — 12 VAC/VDC, 24VAC/VDC, 120 VAC/VDC.

Power Requirement — 3W max.

Transient Protection —
Non-repetitive transients of the following magnitudes will not cause spurious operation of affect function and accuracy.

Operating Voltage	<0.1 ms	<1 ms
12, 24 VAC/VDC	860V*	208V*
120 VAC/VDC	2,580V	2,150V*

* Min. source impedance of 100 ohm.

Environmental Data

Temperature Range —
Storage — -40°C to +85°C
Operating — -40°C to +65°C

Mechanical Data

Mounting — Panel mount with one #8 screw.

Termination — 0.250 in (6.35) quick connect terminals.

Weight — 3 oz. (84g) approximately

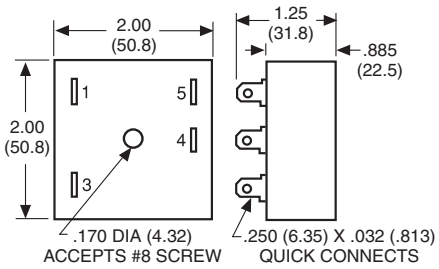

Outline Dimensions

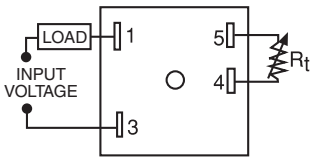

Wiring Diagram

An external resistance of 1 megohm is required to obtain the maximum time for all ranges. To determine the actual resistance needed to obtain the required time delay, use the following formula:

$$R_T = \frac{(T_{REQ} - T_{MIN})}{T_{MAX} - T_{MIN}} \times 1{,}000{,}000 \text{ ohms}$$

Ordering Information

VTM1	A	CD
Series VTM1 On-Delay Timing Module	**Input Voltage** A = 120VAC/VDC E = 24VAC/VDC Q = 12VAC/VDC	**Time Range** CD = 0.5 - 10 sec. DD = 3 - 60 sec. FD = 0.5 - 10 min. GD = 3 - 60 min.

Users should thoroughly review the technical data before selecting a product part number. It is recommended that user also seek out the pertinent approvals files of the agencies/laboratories and review them to ensure the product meets the requirements for a given application.

Authorized distributors are likely to stock the following:

VTM1ECD
VTM1EDD

Catalog 5-1773450-5
Revised 3-13

www.te.com

Dimensions are shown for reference purposes only. Specifications subject to change.

Dimensions are in millimeters unless otherwise specified.

USA: +1 800 522 6752
Asia Pacific: +86 0 400 820 6015
UK: +44 800 267 666

For additional support numbers please visit www.te.com

VTM-1 Series, Specification Grade, On-Delay, Timing Module

Product Facts

- **On-delay timing mode**
- **Timing from 1 to 1000 sec.**
- **1A solid state SPST-NO output**
- **0.25" (6.35) quick connect terminals**
- **Universal voltage: 24 to 240VAC/VDC**
- **Rated to 10 million operations**
- **File E60363, File LR51332**

Users should thoroughly review the technical data before selecting a product part number. It is recommended that user also seek out the pertinent approvals files of the agencies/laboratories and review them to ensure the product meets the requirements for a given application.

Timing Specifications

Timing Mode — On-Delay – VTM-1 in-line timing module is wired in series with the load circuit. Time delay is initiated when power is applied to the series network. Connecting a resistor across the center terminals provides tamper-proof setting of time delay from 1-1000 sec.

Timing Ranges — 1 to 1,000 sec.

Timing Adjustment — Time delay is set by connecting an appropriately rated resistor or potentiometer between the center two terminals. As supplied, the unit provides a nominal 1 second delay. Add 10k ohm of resistance for every additional second of delay required. For example: 5 seconds = 40k ohms; 10 seconds = 90k ohms.

Accuracy —
Repeat Accuracy — ±2%

Reset Time — 100 ms, max., in the timing or time-out condition.

Output Switch Data

Arrangement — 1 Form A (SPST-NO)

Rating — 5A, inductive, at nominal operating voltage.

Inrush — Not to exceed 10A for one cycle.

Max. Leakage Current — 4mA rms

Expected Electrical Life — 10,000,000 operations at rated load.

Initial Dielectric Strength — Between Active Terminals and Outside of Case — 1,480VAC for one min.

Input Data @ 25°C

Operating Voltage — Universal — 24-240VAC/VDC (19-288VAC/VDC).

Current — 2mA (max.) required to operate timer regardless of output state.

Power Requirement — 3W max.

Transient Protection — MOV across input 2,000V for 11µs on line side of load.

Environmental Data

Temperature Range —
Storage — -40°C to +85°C
Operating — -30°C to +65°C

Mechanical Data

Mounting — Screw mount in horizontal or vertical position through built-in mounting ears.

Termination — 0.250 in (6.35) quick connect terminals for input line, load output and timing resistor connection.

Weight — 3 oz. (84g) approximately

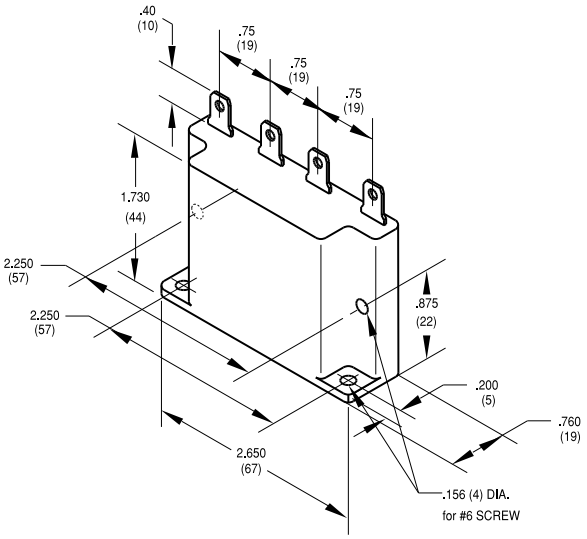

Outline Dimensions

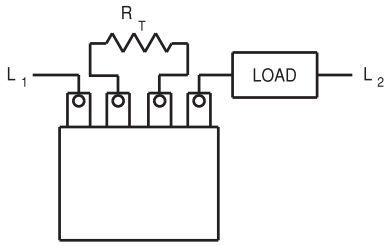

Wiring Diagram

Ordering Information

Part Number	Mode	Input Voltage
VTM-1	On-Delay	24-240VAC or VDC

Notes:

1. Do not operate timer without connecting load in series with line voltage.
2. For a time delay of 1 second, connect a jumper across the center two terminals.

Authorized distributors are likely to stock the following:

VTM-1

Catalog 5-1773450-5
Revised 3-13

www.te.com

Dimensions are shown for reference purposes only. Specifications subject to change.

Dimensions are in millimeters unless otherwise specified.

USA: +1 800 522 6752
Asia Pacific: +86 0 400 820 6015
UK: +44 800 267 666

For additional support numbers please visit www.te.com

VTM2 Series, Off-Delay, Timing Module

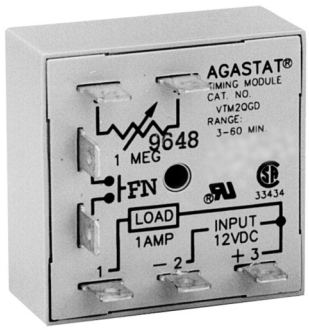

Product Facts

- **Off-delay timing mode**
- **Reliable solid state timing circuitry**
- **Excellent transient protection**
- **Compact design**
- **Flame retardant, solvent resistant housing**
- **File E60363, File LR33434**

Timing Specifications

Timing Mode — Off-Delay

Timing Ranges — 0.5 to 10 / 3 to 60 sec.; 3 to 60 min.

Timing Adjustment — External resistor or potentiometer. An external resistance of 1 megohm is required to obtain the maximum time for all ranges. To determine the actual resistance needed to obtain the required time delay, use the following formula:

$$R_T = \frac{(T_{REQ} - T_{MIN})}{T_{MAX} - T_{MIN}} \times 1{,}000{,}000 \text{ ohms}$$

Accuracy —
Repeat Accuracy — ±1%
Overall Accuracy — ±2% at R = 1 megohm

Reset Time — 50 ms, max.

Output Switch Data

Arrangement — Solid state 1 Form A (SPST-NO)

Rating — 1A, inductive, at nominal operating voltage.

Expected Electrical Life — 10,000,000 operations at rated load.

Initial Dielectric Strength —
Between Terminals and Mounting — 3,000VAC rms.
Between Input and Output — 1,500VAC rms.

Input Data @ 25°C

Voltage (±10%) — 12 VAC/VDC, 24VAC/VDC, 120 VAC/VDC.

Power Requirement — 4W with rated load

Transient Protection —
Non-repetitive transients of the following magnitudes will not cause spurious operation of affect function and accuracy.

Operating Voltage	<0.1 ms	<1 ms
12, 24 VAC/VDC	860V*	208V*
120 VAC/VDC	2,580V	2,150V*

* Min. source impedance of 100 ohm.

Environmental Data

Temperature Range —
Storage — -40°C to +85°C
Operating — -40°C to +65°C

Mechanical Data

Mounting — Panel mount with one #8 screw.

Termination — 0.250 in (6.35) quick connect terminals.

Weight — 4 oz. (112g) approximately

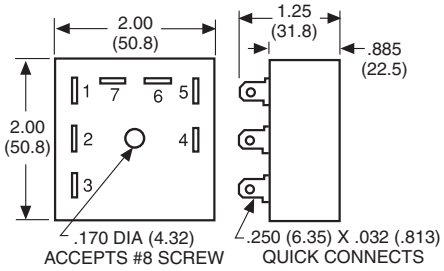

Outline Dimensions

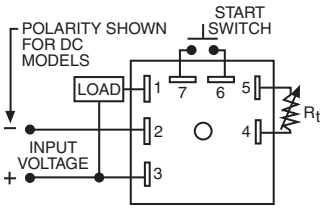

Wiring Diagram

An external resistance of 1 megohm is required to obtain the maximum time for all ranges. To determine the actual resistance needed to obtain the required time delay, use the following formula:

$$R_T = \frac{(T_{REQ} - T_{MIN})}{T_{MAX} - T_{MIN}} \times 1{,}000{,}000 \text{ ohms}$$

Ordering Information

VTM2	A	CD
Series VTM2 Off-Delay Timing Module	**Input Voltage** A = 120VAC/VDC E = 24VAC/VDC Q = 12VAC/VDC	**Time Range** CD = 0.5 - 10 sec. DD = 3 - 60 sec. GD = 3 - 60 min.

Users should thoroughly review the technical data before selecting a product part number. It is recommended that user also seek out the pertinent approvals files of the agencies/laboratories and review them to ensure the product meets the requirements for a given application.

Authorized distributors are likely to stock the following:

None at present.

Catalog 5-1773450-5
Revised 3-13

www.te.com

Dimensions are shown for reference purposes only. Specifications subject to change.

Dimensions are in millimeters unless otherwise specified.

USA: +1 800 522 6752
Asia Pacific: +86 0 400 820 6015
UK: +44 800 267 666

For additional support numbers please visit www.te.com

VTM3 Series, Interval, Timing Module

Product Facts

- **Interval timing mode**
- **Reliable solid state timing circuitry**
- **Excellent transient protection**
- **Compact design**
- **Flame retardant, solvent resistant housing**
- **File E60363, File LR33434**

Timing Specifications

Timing Mode — Interval

Timing Ranges — 0.5 to 10 / 3 to 60 sec.; 3 to 60 min.

Timing Adjustment — External resistor or potentiometer. An external resistance of 1 megohm is required to obtain the maximum time for all ranges. To determine the actual resistance needed to obtain the required time delay, use the following formula:

$$R_T = \frac{(T_{REQ} - T_{MIN})}{T_{MAX} - T_{MIN}} \times 1{,}000{,}000 \text{ ohms}$$

Accuracy —
Repeat Accuracy — ±1%
Overall Accuracy — ±2% at R = 1 megohm

Reset Time — 50 ms, max.

Output Switch Data

Arrangement — Solid state 1 Form A (SPST-NO)

Rating — 1A, inductive, at nominal operating voltage.

Expected Electrical Life — 10,000,000 operations at rated load.

Initial Dielectric Strength —
Between Terminals and Mounting — 3,000VAC rms.
Between Input and Output — 1,500VAC rms.

Input Data @ 25°C

Voltage (±10%) — 12 VAC/VDC, 24VAC/VDC, 120 VAC/VDC.

Power Requirement — 4W with rated load

Transient Protection —
Non-repetitive transients of the following magnitudes will not cause spurious operation of affect function and accuracy.

Operating Voltage	<0.1 ms	<1 ms
12, 24 VAC/VDC	860V*	208V*
120 VAC/VDC	2,580V	2,150V*

* Min. source impedance of 100 ohms.

Current Drain — Less than 5mA.

Environmental Data

Temperature Range —
Storage — -40°C to +85°C
Operating — -40°C to +65°C

Mechanical Data

Mounting — Panel mount with one #8 screw.

Termination — 0.250 in (6.35) quick connect terminals.

Weight — 4 oz. (112g) approximately

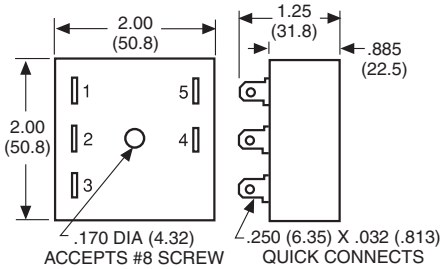

Outline Dimensions

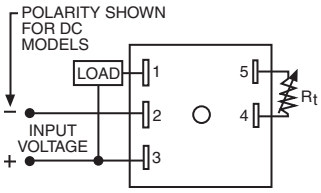

Wiring Diagram

An external resistance of 1 megohm is required to obtain the maximum time for all ranges. To determine the actual resistance needed to obtain the required time delay, use the following formula:

$$R_T = \frac{(T_{REQ} - T_{MIN})}{T_{MAX} - T_{MIN}} \times 1{,}000{,}000 \text{ ohms}$$

Ordering Information

VTM3	A	CD
Series VTM3 Interval Timing Module	**Input Voltage** A = 120VAC/VDC E = 24VAC/VDC Q = 12VAC/VDC	**Time Range** CD = 0.5 - 10 sec. DD = 3 - 60 sec. GD = 3 - 60 min.

Users should thoroughly review the technical data before selecting a product part number. It is recommended that user also seek out the pertinent approvals files of the agencies/laboratories and review them to ensure the product meets the requirements for a given application.

Authorized distributors are likely to stock the following:

None at present.

Catalog 5-1773450-5
Revised 3-13

www.te.com

Dimensions are shown for reference purposes only. Specifications subject to change.

Dimensions are in millimeters unless otherwise specified.

USA: +1 800 522 6752
Asia Pacific: +86 0 400 820 6015
UK: +44 800 267 666

For additional support numbers please visit www.te.com

VTM4 Series, One Shot (Latching Interval), Timing Module

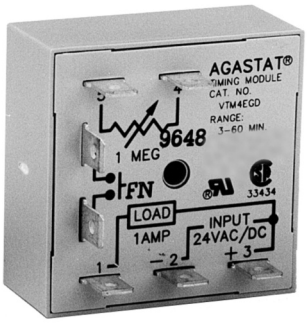

Product Facts

- **One shot (latching interval) timing mode**
- **Reliable solid state timing circuitry**
- **Excellent transient protection**
- **Compact design**
- **Flame retardant, solvent resistant housing**
- **File E60363, File LR33434**

Timing Specifications

Timing Mode — One Shot (Latching Interval)

Timing Ranges — 0.5 to 10 / 3 to 60 sec.; 0.5 to 10 / 3 to 60 min.

Timing Adjustment — External resistor or potentiometer. An external resistance of 1 megohm is required to obtain the maximum time for all ranges. To determine the actual resistance needed to obtain the required time delay, use the following formula:

$$R_T = \frac{(T_{REQ} - T_{MIN})}{T_{MAX} - T_{MIN}} \times 1{,}000{,}000 \text{ ohms}$$

Accuracy —
Repeat Accuracy — ±1%
Overall Accuracy — ±2% at R = 1 megohm

Reset Time — 50 ms, max.

Output Switch Data

Arrangement — Solid state 1 Form A (SPST-NO)

Rating — 1A, inductive, at nominal operating voltage.

Expected Electrical Life — 10,000,000 operations at rated load.

Initial Dielectric Strength —
Between Terminals and Mounting — 3,000VAC rms.
Between Input and Output — 1,500VAC rms.

Input Data @ 25°C

Voltage (±10%) — 12 VAC/VDC, 24VAC/VDC, 120 VAC/VDC.

Power Requirement — 4W with rated load

Transient Protection —
Non-repetitive transients of the following magnitudes will not cause spurious operation of affect function and accuracy.

Operating Voltage	<0.1 ms	<1 ms
12, 24 VAC/VDC	860V*	208V*
120 VAC/VDC	2,580V	2,150V*

* Min. source impedance of 100 ohms.

Current Drain — Less than 5mA.

Environmental Data

Temperature Range —
Storage — -40°C to +85°C
Operating — -40°C to +65°C

Mechanical Data

Mounting — Panel mount with one #8 screw.

Termination — 0.250 in (6.35) quick connect terminals.

Weight — 4 oz. (112g) approximately

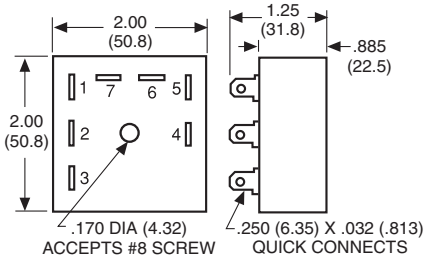

Outline Dimensions

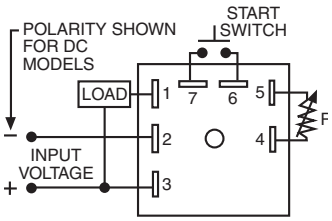

An external resistance of 1 megohm is required to obtain the maximum time for all ranges. To determine the actual resistance needed to obtain the required time delay, use the following formula:

$$R_T = \frac{(T_{REQ} - T_{MIN})}{T_{MAX} - T_{MIN}} \times 1{,}000{,}000 \text{ ohms}$$

Wiring Diagram

Ordering Information

VTM4	A	CD
Series VTM4 One Shot (Latching Interval) Timing Module	**Input Voltage** A = 120VAC/VDC E = 24VAC/VDC Q = 12VAC/VDC	**Time Range** CD = 0.5 - 10 sec. DD = 3 - 60 sec. FD = 0.5 - 10 min. GD = 3 - 60 min.

Users should thoroughly review the technical data before selecting a product part number. It is recommended that user also seek out the pertinent approvals files of the agencies/laboratories and review them to ensure the product meets the requirements for a given application.

Authorized distributors are likely to stock the following:

None at present.

Catalog 5-1773450-5
Revised 3-13

www.te.com

Dimensions are shown for reference purposes only. Specifications subject to change.

Dimensions are in millimeters unless otherwise specified.

USA: +1 800 522 6752
Asia Pacific: +86 0 400 820 6015
UK: +44 800 267 666

For additional support numbers please visit www.te.com

VTM7 Series, Repeat Cycle, Timing Module

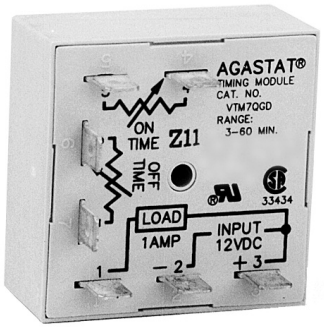

Product Facts

- **Repeat cycle timing mode**
- **Independently adjustable On and Off times**
- **Reliable solid state timing circuitry**
- **Excellent transient protection**
- **Compact design**
- **Flame retardant, solvent resistant housing**
- **File E60363, File LR33434**

Timing Specifications

Timing Mode — Repeat Cycle

Timing Ranges — 0.5 to 10 / 3 to 60 sec.; 3 to 60 min.

Timing Adjustment — External resistor or potentiometer. An external resistance of 1 megohm is required to obtain the maximum time for all ranges. To determine the actual resistance needed to obtain the required time delay, use the following formula:

$$R_T = \frac{(T_{REQ} - T_{MIN})}{T_{MAX} - T_{MIN}} \times 1{,}000{,}000 \text{ ohms}$$

Accuracy —
Repeat Accuracy — ±1%
Overall Accuracy — ±2% at R = 1 megohm

Reset Time — 500 ms

Output Switch Data

Arrangement — Solid state 1 Form A (SPST-NO)

Rating — 1A, inductive, at nominal operating voltage.

Expected Electrical Life — 10,000,000 operations at rated load.

Initial Dielectric Strength —
Between Terminals and Mounting — 3,000VAC rms.
Between Input and Output — 1,500VAC rms.

Input Data @ 25°C

Voltage (±10%) — 12 VAC/VDC, 24VAC/VDC, 120 VAC/VDC.

Power Requirement — 4W with rated load

Transient Protection —
Non-repetitive transients of the following magnitudes will not cause spurious operation of affect function and accuracy.

Operating Voltage	<0.1 ms	<1 ms
12, 24 VAC/VDC	860V*	208V*
120 VAC/VDC	2,580V	2,150V*

* Min. source impedance of 100 ohms.

Current Drain — Less than 5mA.

Environmental Data

Temperature Range —
Storage — -40°C to +85°C
Operating — -40°C to +65°C

Mechanical Data

Mounting — Panel mount with one #8 screw.

Termination — 0.250 in (6.35) quick connect terminals.

Weight — 4 oz. (112g) approximately

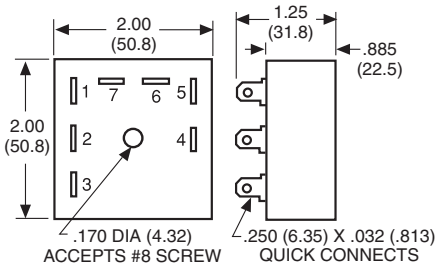

Outline Dimensions

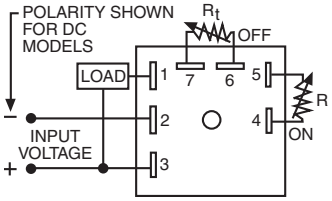

An external resistance of 1 megohm is required to obtain the maximum time for all ranges. To determine the actual resistance needed to obtain the required time delay, use the following formula:

$$R_T = \frac{(T_{REQ} - T_{MIN})}{T_{MAX} - T_{MIN}} \times 1{,}000{,}000 \text{ ohms}$$

Wiring Diagram

Ordering Information

VTM7	A	CD
Series VTM7 Repeat Cycle Timing Module	**Input Voltage** A = 120VAC/VDC E = 24VAC/VDC Q = 12VAC/VDC	**Time Range** CD = 0.5 - 10 sec. DD = 3 - 60 sec. GD = 3 - 60 min.

Users should thoroughly review the technical data before selecting a product part number. It is recommended that user also seek out the pertinent approvals files of the agencies/laboratories and review them to ensure the product meets the requirements for a given application.

Authorized distributors are likely to stock the following:

None at present.

Catalog 5-1773450-5
Revised 3-13

www.te.com

Dimensions are shown for reference purposes only. Specifications subject to change.

Dimensions are in millimeters unless otherwise specified.

USA: +1 800 522 6752
Asia Pacific: +86 0 400 820 6015
UK: +44 800 267 666

For additional support numbers please visit www.te.com

VTMA1 Series, On-Delay Timing Module, With Internal Potentiometer

Product Facts

- **On-delay timing mode**
- **Discrete voltage or universal type**
- **Internal potentiometer for timing adjustment**
- **Reliable solid state timing circuitry**
- **Excellent transient protection**
- **Flame retardant, solvent resistant housing**
- **File E60363, File LR33434**

Timing Specifications

Timing Mode — On-Delay

Timing Ranges —
VTMA1ULA only — 24 to 480 sec.
All others — 0.5 to 10 / 3 to 60 /15 to 300 sec.; 3 to 60 min.

Timing Adjustment —
Internal potentiometer

Accuracy —
Repeat Accuracy — ±5%
Overall Accuracy —
Max. Time: –0%, +10%.
Min. Time: –30%, +10%.

Reset Time — 250 ms, max., before time-out; 10 ms, max., after time-out.

Output Switch Data

Arrangement — Solid state 1 Form A (SPST-NO)

Rating — 1A, inductive, at nominal operating voltage.

Expected Electrical Life — 10,000,000 operations at rated load.

Initial Dielectric Strength —
Between Terminals and Mounting — 3,000VAC rms.
Between Input and Output — 1,500VAC rms.

Input Data @ 25°C

Voltage (±10%) — 120VAC/VDC (unfiltered DC must be full-wave rectified) or 24 to 240 VAC/VDC.

Power Requirement — 250mW during timing; 3W, max. after time out.

Transient Protection —
Non-repetitive transients of the following magnitudes will not cause spurious operation of affect function and accuracy.

Operating Voltage	<0.1 ms	<1 ms
24 VAC/VDC	860V*	208V*
120/ 240 VAC/VDC	2,580V	2,150V*

* Min. source impedance of 100 ohms.

Current Drain — 2mA, Max.

Environmental Data

Temperature Range —
Storage — -40°C to +85°C
Operating — -40°C to +65°C

Mechanical Data

Mounting — Panel mount with one #8 screw.

Termination — 0.250 in (6.35) quick connect terminals.

Weight — 4 oz. (112g) approximately

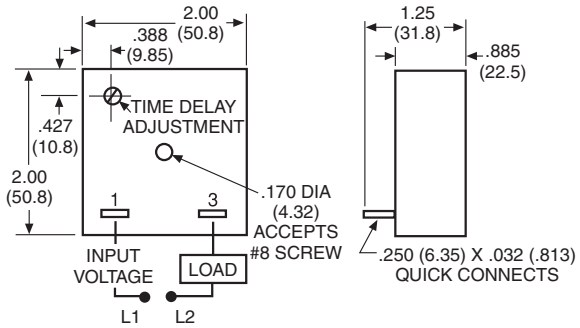

Outline Dimensions and Wiring Diagram

Ordering Information

Part Number	Time Range	Input Voltage
VTMA1ACA	0.5 to 10 sec.	120VAC or VDC
VTMA1ADA	3 to 60 sec.	
VTMA1ULA	24 to 480 sec.	24-240VAC or VDC

Users should thoroughly review the technical data before selecting a product part number. It is recommended that user also seek out the pertinent approvals files of the agencies/laboratories and review them to ensure the product meets the requirements for a given application.

Authorized distributors are likely to stock the following:

None at present.

Catalog 5-1773450-5
Revised 3-13

www.te.com

Dimensions are shown for reference purposes only. Specifications subject to change.

Dimensions are in millimeters unless otherwise specified.

USA: +1 800 522 6752
Asia Pacific: +86 0 400 820 6015
UK: +44 800 267 666

For additional support numbers please visit www.te.com

VTMR1 Series, On-Delay Timing Module, With Internal Potentiometer, Relay Output

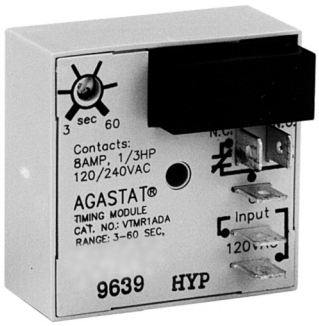

Product Facts

- **On-delay timing mode**
- **8A SPDT relay output**
- **Internal potentiometer for timing adjustment**
- **Reliable solid state timing circuitry**
- **Excellent transient protection**
- **Flame retardant, solvent resistant housing**
- **File E60363, File LR33434**

Timing Specifications

Timing Mode — On-Delay

Timing Ranges — 15 to 300 sec.

Timing Adjustment — Internal potentiometer

Accuracy —
Repeat Accuracy —
±5% max. (0.25% typ.)
Overall Accuracy —
Max. Time: –0%, +10%.
Min. Time: –30%, +10%.

Reset Time — 250 ms, max.

Output Switch Data

Arrangement — 1 Form C (SPDT)

Rating — 8A, resistive, at nominal operating voltage.

Expected Mechanical Life — 10,000,000 operations

Expected Electrical Life — 100,000 operations

Initial Dielectric Strength —
Between Terminals and Mounting — 3,000VAC rms.
Between Input and Output — 1,500VAC rms.

Input Data @ 25°C

Voltage (±10%) — 120VAC/VDC

Power Requirement — 3.5VA max. during timing; 3W, max. after time out.

Transient Protection —
Non-repetitive transients of the following magnitudes will not cause spurious operation of affect function and accuracy.

Operating Voltage	<0.1 ms	<1 ms
120 VAC/VDC	2,580V	2,150V*

* Min. source impedance of 100 ohms.

Current Drain — 30mA, Max.

Environmental Data

Temperature Range —
Storage — -40°C to +70°C
Operating — -40°C to +70°C

Mechanical Data

Mounting — Panel mount with one #8 screw.

Termination — 0.250 in (6.35) quick connect terminals.

Weight — 4 oz. (112g) approximately

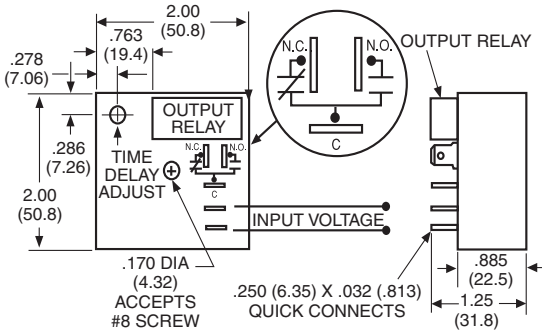

Outline Dimensions and Wiring Diagram

Ordering Information

Part Number	Time Range	Input Voltage
VTMR1AEA	15 to 300 sec.	120VAC

Authorized distributors are likely to stock the following:

None at present.

Users should thoroughly review the technical data before selecting a product part number. It is recommended that user also seek out the pertinent approvals files of the agencies/laboratories and review them to ensure the product meets the requirements for a given application.

Catalog 5-1773450-5
Revised 3-13

www.te.com

Dimensions are shown for reference purposes only. Specifications subject to change.

Dimensions are in millimeters unless otherwise specified.

USA: +1 800 522 6752
Asia Pacific: +86 0 400 820 6015
UK: +44 800 267 666

For additional support numbers please visit www.te.com

Table of Contents

Introduction 13-2
Fin Locking Solenoid 13-3
Primer Firing Solenoid 13-3
Aero Medical Valve Solenoid 13-3
Fuel Valve Solenoid 13-4
Directional Valve Solenoid 13-4
Refueling Release Solenoid 13-4
Application Information Form 13-5

Catalog 5-1773450-5
Revised 3-13

www.te.com

Dimensions are shown for reference purposes only. Specifications subject to change.

Dimensions are in millimeters unless otherwise specified.

USA: +1 800 522 6752
Asia Pacific: +86 0 400 820 6015
UK: +44 800 267 666

For additional support numbers please visit www.te.com

CII Custom High Performance Solenoids

Product Facts

- **Designed and built to customer requirements**
- **Push, pull or combination motion**
- **Broad operating temperature range**
- **Multiple termination and mounting options**
- **200°C magnet wire insulation is standard**

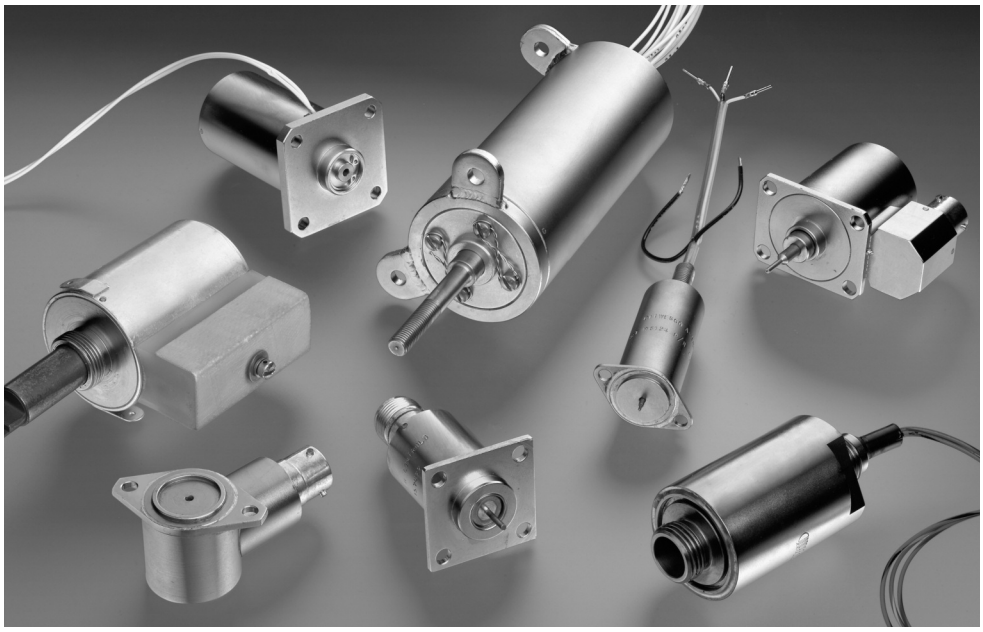

Description

Custom-designed linear solenoids for demanding applications

Top-end devices are engineered for applications where extreme temperatures and other severe environmental conditions may exist

High altitude, shock, acceleration and vibration reliable

Product Options

Linear motion, tubular solenoid line ranges from models only one-half inch (12.7 mm) in diameter producing only a few ounces (<1N) of force at very short strokes, to three-inch (76.2 mm) diameter models capable of 100 pounds (445N) force at one-inch (25.4 mm) strokes

Push, pull or combination motion available

Continuous or intermittent duty coils available

AC voltages can be handled through the use of internal rectifiers

Dual coil models with low holding power requirement may be appropriate in power sensitive equipment

Solenoids with plunger seals can be built for harsh environments

Solenoids can be made water-resistant, fuel-resistant and with encapsulated coils (ferrous parts are plated for protection against corrosion)

Leads are normally provided with fluoropolymer insulation, PTFE or ETFE; however, any type wire may be used as specified by the customer. MIL type connectors may also be used when specified. Can be provided with flat or conical face depending on stroke

Solenoid plungers can be internally or externally threaded or have clevis attachment

Prototype solenoids can be custom built to a customer's requirements

Electrical Characteristics

Voltage Rating —
6 to 270 VDC
28 to 115 VAC (60 or 400 Hz)

Mechanical Characteristics

Ambient Temperature Range — -65˚C to +125˚C

Force — 1 oz. to 100 lbs. push, pull, hold

Rated at 100,000 operations

Built IAW MIL-S-4040 as applicable

Catalog 5-1773450-5
Revised 3-13

www.te.com

Dimensions are shown for reference purposes only. Specifications subject to change.

Dimensions are in millimeters unless otherwise specified.

USA: +1 800 522 6752
Asia Pacific: +86 0 400 820 6015
UK: +44 800 267 666

For additional support numbers please visit www.te.com

CII Custom High Performance Solenoids (Continued)

Typical Applications

Fin Locking Solenoid

Three of these husky Solenoids are used to lock steering fins in place until the guided weapon is released.

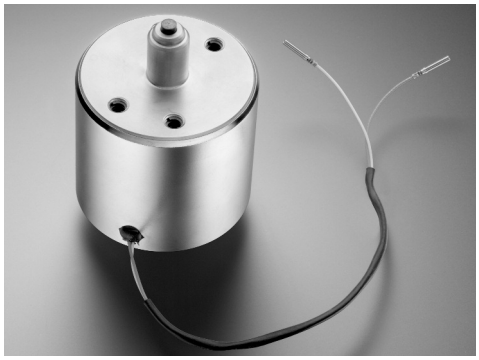

Voltage — 22-28 VDC
Max. Allowable Current — Not specified
Actuating Force — 12 to 15.4 lb. (depends on input V)
Stroke — .095"
Time On — Bomb drop time
Time Off — Continuous
Cycling Rate — Not applicable
Type Operation — Pull
Temperature Range — Ambient -65˚F to +125˚F
Coil Connections — Fluoropolymer Insulation 8" to 8 3/4"
Approximate Dimensions — 2.20" diameter x 2.05" long
Type Mounting — Integral tapped holes
Special Environmental Consideration — Exposure to sand, dust, aircraft oils and fuels, will require an "O" ring seal on plunger.

Primer Firing Solenoid

This extremely powerful Solenoid together with its companion pulse control module is designed to fire a standard Military #41 arsenal primer, as part of an advanced mine detection system.

Voltage — 26 VDC
Max. Allowable Current — 10.4 Amps @ 26 VDC
Actuating Force — 90 oz. force inches (.64 joules)
Stroke — .38"
Time On — W/pulse control module, 25 ms
Time Off — 3 seconds
Cycling Rate — 20 operations/minute
Type Operation — Push
Temperature Range — Ambient -65˚F to +85˚F
Coil Connections — Fluoropolymer Insulation #20 stranded 6' long
Approximate Dimensions — 3/4" diameter x 3 1/2" long
Type Mounting — Integral 1/2" - 20 threaded base
Special Environmental Consideration — Sand and dust

Aero Medical Valve Solenoid

A scant 3/8" in diameter, this tiny precision Solenoid is capable of 100,000 reliable operations, controlling various airborne gas systems.

Voltage — 28 VDC
Max. Allowable Current — .18 Amps @ 28 VDC
Actuating Force — 190 grams @ .030 Amps
Stroke — .030" minimum
Time On — Continuous duty
Time Off — Not specified
Cycling Rate — Not applicable
Type Operation — Pull
Temperature Range — Ambient -65˚F to +125˚F
Coil Connections — #32 AWG Fluoropolymer Insulation, 24" minimum
Approximate Dimensions — 3/8" diameter x 3/4" long
Type Mounting — None

Catalog 5-1773450-5
Revised 3-13

www.te.com

Dimensions are shown for reference purposes only. Specifications subject to change.

Dimensions are in millimeters unless otherwise specified.

USA: +1 800 522 6752
Asia Pacific: +86 0 400 820 6015
UK: +44 800 267 666

For additional support numbers please visit www.te.com

CII Custom High Performance Solenoids (Continued)

Typical Applications (Continued)

Fuel Valve Solenoid

This is a unique application in which the Solenoid is mounted inside an aircraft fuel tank submerged in JP-8 jet fuel. The coil is potted, completely fuel proof.

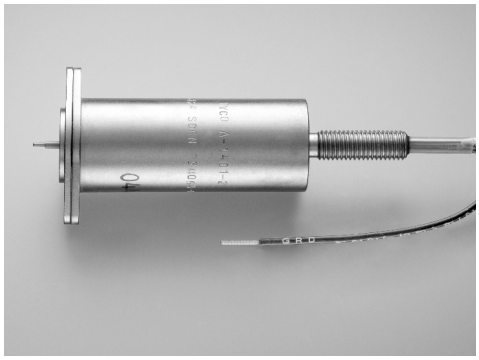

Voltage — 115 VAC 400 Hz
Actuating Force — 1 lb. minimum @ 160˚F
Stroke — .030"
Time On — Continuous duty rating
Time Off — Not specified
Type Operation — Push
Temperature Range — Ambient -65˚F to +160˚F
Coil Connections — IAW customer drawing, Fluoropolymer Insulation Leads
Approximate Dimensions — Tubular, 3/4" diameter x 3" long
Type Mounting — Flange IAW customer drawing
Special Environmental Consideration — Coil must be air tight, plunger operates while submerged in JP-8 jet fuel

Directional Valve Solenoid

A major valve company selected this rugged type Solenoid to control a directional hydraulic valve in heavy industrial machinery. The valve assembly has a 20 year expected life.

Voltage — 92 VDC
Max. Allowable Current — 7.2 Amps inrush, .08 Amps hold
Actuating Force — 30 lbs. minimum
Holding Force — 40 lbs. minimum
Stroke — .500"
Time On — Continuous duty
Time Off — Not applicable
Cycling Rate — Not applicable
Type Operation — Push and hold
Temperature Range — Ambient -55˚F to +85˚F
Coil Connections — Fluoropolymer Insulation #18 AWG, 72" L
Approximate Dimensions — 2 3/16" dia. x 4 3/16"
Type Mounting — Plate
Special Environmental Consideration — Sand, dust, rain

Refueling Release Solenoid

This complex Solenoid with internal current limiting switch is part of an “Air to Air” refueling system.

Voltage — 18 to 30 VDC
Max. Allowable Current — 10 Amps/50 ms - 1 Amp continuous holding
Actuating Force — 20 lbs. min. for .10" of initial stroke
Holding Force — Plunger must hold at bottom
Stroke — .17 to .20"
Time On — Continuous duty
Time Off — Not applicable
Cycling Rate — Not applicable
Type Operation — Pull
Temperature Range — Ambient -65˚F to +160˚F
Coil Connections — Connector MS 30ZE-10SL-4P per MIL-C-5015
Approximate Dimensions — 2 1/4" dia. x 2 13/16"
Type Mounting — Integral with refueling receptacle
Special Environmental Consideration — High performance aircraft exposure

Catalog 5-1773450-5
Revised 3-13

www.te.com

Dimensions are shown for reference purposes only. Specifications subject to change.

Dimensions are in millimeters unless otherwise specified.

USA: +1 800 522 6752
Asia Pacific: +86 0 400 820 6015
UK: +44 800 267 666

For additional support numbers please visit www.te.com

CII Custom High Performance Solenoids (Continued)

Application Information Form

Customer Firm Name: _____

Customer Name: _____

Customer Address: _____

_____

Telephone number: _____

Email address: _____

Voltage:_____±_____% AC or DC (circle one)

Maximum allowable current:_____ Amps

Actuating force: _____(Energy produced when coil is energized at start of stroke)

Holding force: _____(Energy required at zero stroke, plunger seated on butt flange with coil energized).

Stroke: _____ inches or millimeters (circle one)

Duty cycle: Time On:_____ Time Off:_____

Cycle rate:_____ cycles per hour

Type of operation: Push or Pull (circle one)

Temperature range if other than -65°C to +125°C: _____

Coil connections: _____Leads or Mil-type connector (circle one)

Approximate dimensions:_____

Type of mounting: _____

Applicable Mil-specs:_____

Special environmental considerations (i.e., exposure to salt spray, jet fuel, water, sand and dust): _____

_____

_____

End application of solenoid:_____

_____

_____

_____

Special tests: _____

_____

Application Type: ☐ New Design ☐ Replacement

Approximate quantity (annual requirement): _____

Please return completed form to John Gilbart, Product Manager for custom solenoids.
Fax: 828-338-1103 E-mail: gilbartj@te.com

Catalog 5-1773450-5
Revised 3-13

www.te.com

Dimensions are shown for reference purposes only. Specifications subject to change.

Dimensions are in millimeters unless otherwise specified.

USA: +1 800 522 6752
Asia Pacific: +86 0 400 820 6015
UK: +44 800 267 666

For additional support numbers please visit www.te.com

Engineering Notes

Catalog 5-1773450-5
Revised 3-13

www.te.com

Dimensions are shown for reference purposes only. Specifications subject to change.

Dimensions are in millimeters unless otherwise specified.

USA: +1 800 522 6752
Asia Pacific: +86 0 400 820 6015
UK: +44 800 267 666

For additional support numbers please visit www.te.com

Table of Contents

Power Distribution Units 14-2

Catalog 5-1773450-5
Revised 3-13

www.te.com

Dimensions are shown for reference purposes only. Specifications subject to change.

Dimensions are in millimeters unless otherwise specified.

USA: +1 800 522 6752
Asia Pacific: +86 0 400 820 6015
UK: +44 800 267 666

For additional support numbers please visit www.te.com

Power Distribution Units

Custom-designed and built AC or DC products for aerospace applications

Key platforms for which we have designed and built PDUs:

- Beech 1900 Commuter
- Bell Textron Landing Craft Air Cushion
- Boeing 767, 777
- British Aerospace Jetstream 41
- Dassault Falcon 7X
- Grumman Aerospace S-2 Tracker
- Gulfstream New Commander
- Lockheed Martin F-35 Lightning II
- McDonnell Douglas AH-64 Apache
- McDonnell Douglas F-4 Phantom
- Northrup Grumman E2C Hawkeye
- Piper Cheyenne IV
- Rockwell Sabreliner 65A
- Saab SF-340A/B
- Sikorsky S-92, S76D

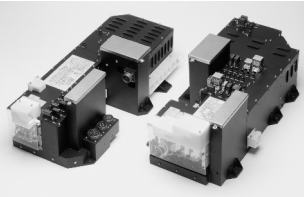

HARTMAN AC and DC power distribution units (PDUs) and KILOVAC DC PDUs from TE Connectivity are designed, built and qualified to meet your specific requirements.

We have a half-century of experience providing PDUs for the aerospace industry, serving both commercial and military customers.

Allow us to apply our significant expertise in integrating bus-bar and plug-in contactors, relays, sensors, monitors, circuit breakers, shunts, generator control units and other components into compact, lightweight PDUs.

Through our value-added service we can save you time and money in your design and manufacturing processes, as well as the end customers' maintenance programs.

Whether you require innovative modular units or backplane-type panels for fixed wing aircraft or rotorcraft, we can help.

Typical PDUs

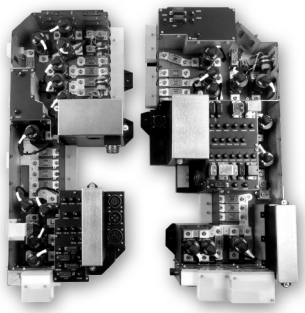

PDU featuring bus bar mount 28Vdc DC contactors.

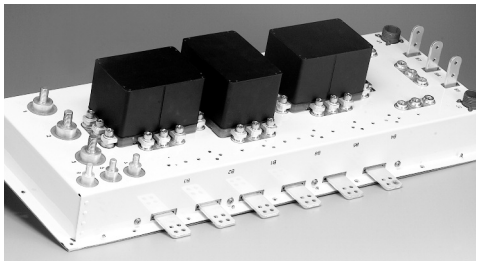

PDU utilizing bus bar mount AC contactors.

PDU utilizing both bus bar mount and plug-in AC contactors.

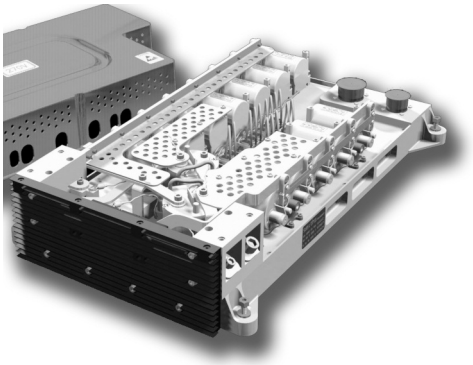

PDU featuring bus bar mount 270Vdc DC contactors.

Catalog 5-1773450-5
Revised 3-13

www.te.com

Dimensions are shown for reference purposes only. Specifications subject to change.

Dimensions are in millimeters unless otherwise specified.

USA: +1 800 522 6752
Asia Pacific: +86 0 400 820 6015
UK: +44 800 267 666

For additional support numbers please visit www.te.com

Table of Contents

Introduction **15-2**
Part Number Example **15-2**
CII Hybrid Relays **15-3, 15-4**
MIL-PRF-28776/1, /3, /4, /5 15-3
MIL-PRF-28776/6 15-4
MIL-PRF-28776/7 15-4
CII Electromechanical Relays . . . . . **15-4 to 15-20**
MII-PRF-39016/6 15-4
MIL-PRF-39016/7 . . . . . 15-4, 15-5
MIL-PRF-39016/9, /10, /11 15-5
MIL-PRF-39016/13 . . . . . 15-6, 15-7
MIL-PRF-39016/14 15-7
MIL-PRF-39016/15, /16, /17 15-8
MIL-PRF-39016/18 . . . . . 15-8, 15-9
MIL-PRF-39016/19 15-9
MIL-PRF-39016/20 . . . . . 15-9, 15-10
MIL-PRF-39016/21, /22, /23, /24 15-10
MII-PRF-39016/25 . . . . . 15-10, 15-11
MIL-PRF-39016/26, /31, /32, /34 15-11
MIL-PRF-39016/35 . . . . . 15-11, 15-12
MIL-PRF-39016/36, /37 15-12
MIL-PRF-39016/38 . . . . . 15-12, 15-13
MIL-PRF-39016/40 15-13
MIL-PRF-39016/41 . . . . . 15-13, 15-14
MIL-PRF-39016/42, /43 15-14
MIL-PRF-39016/44 . . . . . 15-14, 15-15
MIL-PRF-39016/53 15-15
MIL-PRF-39016/54 . . . . . 15-15, 15-16
MIL-R-5757/1, /7, /8, /10, /13 15-16
MIL-R-5757/23 . . . . . 15-16, 15-17
MS27245, MS27247 15-17
MIL-PRF-6106/19 15-17
MIL-PRF-83536/1 15-17
MIL-PRF-83536/2 . . . . . 15-17, 15-18
MIL-PRF-83536/5, /6, /9 15-18
MIL-PRF-83536/10, /15, /16, ... 15-19
MIL-PRF-83536/32, /33, /36 15-20
MIL-PRF-83536/37 15-20
CII Time Delay Relays **15-20**
MIL-PRF-83726/28, /29, /30, /31 15-20
HARTMAN Contactors **15-20**
MS27750 15-20
KILOVAC Vacuum Relays **15-21**
MIL-DTL-83725/1, /2, /4, /5, /10, /16, /17, /18 15-21
MIL-DTL-83725/21, /22, /23, /24 15-21
KILOVAC Solid State Relays **15-22**
MIL-PRF-28750/5, /6, /7, /9, /10 15-22
DSCC 85092, 86031, 87034, 88062, 89116, 90091 15-22
Superseded Conversion Index for MIL-PRF-6106 Part Numbers Superseded by MIL-PRF-83536 . . . . . **15-22 to 15-25**
MS27400 15-22
MS27401 15-23
MS27743 15-23
MIL-PRF-6106/21, /22, /27, /28 . . . . . 15-24, 15-25

Introduction

This index covers all High Performance Group military qualified (QPL) products under the following specifications:

- **CII Hybrid Relays**
  MIL-PRF-28776: Relays, Hybrid, Established Reliability, Low level to 1 Amp

- **CII Electromechanical Relays**
  MIL-PRF-39016: Relays, Electromagnetic, Established Reliability, Low level to 5 Amps
  MIL-R-5757: Relays, Electromagnetic, Low level to 10 Amps
  MS27245: Relays, Electromagnetic, 10 Amps
  MS27247: Relays, Electromagnetic, 10 Amps
  MIL-PRF-83536: Relays, Electromagnetic, Established Reliability, Low level to 25 Amps

- **Hartman Contactors**
  MS27750: Relays, Electromagnetic, 50 Amps

- **Kilovac Vacuum Relays**
  MIL-DLT-83725: Relays, Vacuum, High or Low Voltage Circuits

- **Kilovac Time Delay Relays**
  MIL-PRF-83726: Relays, Hybrid and Solid State, Time Delay
  (NOTE: QPL STATUS PENDING AT TIME OF CATALOG PRINTING)

- **Kilovac Solid State Relays**
  MIL-PRF-28750: Relay, Solid State, Hermetically Sealed or Encapsulated
  DSCC 85092: Relay, Solid State, Optically Isolated, Analog Signal Switching
  DSCC 86031: Relay, Solid State, Optically Isolated, 10 Amps
  DSCC 88062: Relay, Solid State, Optically Isolated, 2.1 Amps
  DSCC 89116: Relay, Solid State, Optically Isolated, 0.25 to 1 Amp
  DSCC 90091: Relay, Solid State, Optically Isolated, 1 or 2 Amps

Military Part Number Example

M	39016/10	-001	L
Military Designator	Specification Sheet Number	Dash Number	Failure Rate Level (see below)

Failure Rate Designation

Failure Rate Level Designation	Failure Rate Level (Percent per 10,000 cycles)
L	3.0
M	1.0
P	0.1

Catalog 5-1773450-5
Revised 3-13

www.te.com

Dimensions are shown for reference purposes only. Specifications subject to change.

Dimensions are in millimeters unless otherwise specified.

USA: +1 800 522 6752
Asia Pacific: +86 0 400 820 6015
UK: +44 800 267 666

For additional support numbers please visit www.te.com

CII Hybrid Relays

MIL-PRF-28776/1

Military Part Number	CII Part Number
M28776/1-013L,M,P	JMAWT-5XL,XM,XP
M28776/1-014L,M,P	JMAWT-6XL,XM,XP
M28776/1-015L,M,P	JMAWT-9XL,XM,XP
M28776/1-016L,M,P	JMAWT-12XL,XM,XP
M28776/1-017L,M,P	JMAWT-18XL,XM,XP
M28776/1-018L,M,P	JMAWT-26XL,XM,XP
M28776/1-019L,M,P	JMAPT-5XL,XM,XP
M28776/1-020L,M,P	JMAPT-6XL,XM,XP
M28776/1-021L,M,P	JMAPT-9XL,XM,XP
M28776/1-022L,M,P	JMAPT-12XL,XM,XP
M28776/1-023L,M,P	JMAPT-18XL,XM,XP
M28776/1-024L,M,P	JMAPT-26XL,XM,XP
M28776/1-025L,M,P	JMACT-5XL,XM,XP
M28776/1-026L,M,P	JMACT-6XL,XM,XP
M28776/1-027L,M,P	JMACT-9XL,XM,XP
M28776/1-028L,M,P	JMACT-12XL,XM,XP
M28776/1-029L,M,P	JMACT-18XL,XM,XP
M28776/1-030L,M,P	JMACT-26XL,XM,XP
M28776/1-031L,M,P	JMACT-5XLS,XMS,XPS
M28776/1-032L,M,P	JMACT-6XLS,XMS,XPS
M28776/1-033L,M,P	JMACT-9XLS,XMS,XPS
M28776/1-034L,M,P	JMACT-12XLS,XMS,XPS
M28776/1-035L,M,P	JMACT-18XLS,XMS,XPS
M28776/1-036L,M,P	JMACT-26XLS,XMS,XPS

MIL-PRF-28776/3

Military Part Number	CII Part Number
M28776/3-017L,M,P	JMSWT-5XL,XM,XP
M28776/3-018L,M,P	JMSWT-6XL,XM,XP
M28776/3-019L,M,P	JMSWT-9XL,XM,XP
M28776/3-020L,M,P	JMSWT-12XL,XM,XP
M28776/3-021L,M,P	JMSWT-18XL,XM,XP
M28776/3-022L,M,P	JMSWT-26XL,XM,XP
M28776/3-023L,M,P	JMSWT-36XL,XM,XP
M28776/3-024L,M,P	JMSWT-48XL,XM,XP
M28776/3-025L,M,P	JMSPT-5XL,XM,XP
M28776/3-026L,M,P	JMSPT-6XL,XM,XP
M28776/3-027L,M,P	JMSPT-9XL,XM,XP
M28776/3-028L,M,P	JMSPT-12XL,XM,XP
M28776/3-029L,M,P	JMSPT-18XL,XM,XP
M28776/3-030L,M,P	JMSPT-26XL,XM,XP
M28776/3-031L,M,P	JMSPT-36XL,XM,XP
M28776/3-032L,M,P	JMSPT-48XL,XM,XP
M28776/3-033L,M,P	JMSCT-5XL,XM,XP
M28776/3-034L,M,P	JMSCT-6XL,XM,XP
M28776/3-035L,M,P	JMSCT-9XL,XM,XP
M28776/3-036L,M,P	JMSCT-12XL,XM,XP
M28776/3-037L,M,P	JMSCT-18XL,XM,XP
M28776/3-038L,M,P	JMSCT-26XL,XM,XP
M28776/3-039L,M,P	JMSCT-36XL,XM,XP
M28776/3-040L,M,P	JMSCT-48XL,XM,XP
M28776/3-041L,M,P	JMSCT-5XLS,XMS,XPS
M28776/3-042L,M,P	JMSCT-6XLS,XMS,XPS
M28776/3-043L,M,P	JMSCT-9XLS,XMS,XPS
M28776/3-044L,M,P	JMSCT-12XLS,XMS,XPS
M28776/3-045L,M,P	JMSCT-18XLS,XMS,XPS
M28776/3-046L,M,P	JMSCT-26XLS,XMS,XPS
M28776/3-047L,M,P	JMSCT-36XLS,XMS,XPS
M28776/3-048L,M,P	JMSCT-48XLS,XMS,XPS

MIL-PRF-28776/4

Military Part Number	CII Part Number
M28776/4-017L,M,P	J1MSWT-5XL,XM,XP
M28776/4-018L,M,P	J1MSWT-6XL,XM,XP
M28776/4-019L,M,P	J1MSWT-9XL,XM,XP
M28776/4-020L,M,P	J1MSWT-12XL,XM,XP
M28776/4-021L,M,P	J1MSWT-18XL,XM,XP
M28776/4-022L,M,P	J1MSWT-26XL,XM,XP
M28776/4-023L,M,P	J1MSWT-32XL,XM,XP
M28776/4-024L,M,P	J1MSWT-40XL,XM,XP
M28776/4-025L,M,P	J1MSPT-5XL,XM,XP
M28776/4-026L,M,P	J1MSPT-6XL,XM,XP
M28776/4-027L,M,P	J1MSPT-9XL,XM,XP
M28776/4-028L,M,P	J1MSPT-12XL,XM,XP
M28776/4-029L,M,P	J1MSPT-18XL,XM,XP
M28776/4-030L,M,P	J1MSPT-26XL,XM,XP
M28776/4-031L,M,P	J1MSPT-32XL,XM,XP
M28776/4-032L,M,P	J1MSPT-40XL,XM,XP
M28776/4-033L,M,P	J1MSCT-5XL,XM,XP
M28776/4-034L,M,P	J1MSCT-6XL,XM,XP
M28766/4-035L,M,P	J1MSCT-9XL,XM,XP
M28776/4-036L,M,P	J1MSCT-12XL,XM,XP
M28776/4-037L,M,P	J1MSCT-18XL,XM,XP
M28776/4-038L,M,P	J1MSCT-26XL,XM,XP
M28776/4-039L,M,P	J1MSCT-32XL,XM,XP
M28776/4-040L,M,P	J1MSCT-40XL,XM,XP
M28776/4-041L,M,P	J1MSCT-5XLS,XMS,XPS
M28776/4-042L,M,P	J1MSCT-6XLS,XMS,XPS
M28776/4-043L,M,P	J1MSCT-9XLS,XMS,XPS
M28776/4-044L,M,P	J1MSCT-12XLS,XMS,XPS
M28776/4-045L,M,P	J1MSCT-18XLS,XMS,XPS
M28776/4-046L,M,P	J1MSCT-26XLS,XMS,XPS
M28776/4-047L,M,P	J1MSCT-32XLS,XMS,XPS
M28776/4-048L,M,P	J1MSCT-40XLS,XMS,XPS

MIL-PRF-28776/5

Military Part Number	CII Part Number
M28776/5-013L,M,P	J1MAWT-5XL,XM,XP
M28776/5-014L,M,P	J1MAWT-6XL,XM,XP
M28776/5-015L,M,P	J1MAWT-9XL,XM,XP
M28776/5-016L,M,P	J1MAWT-12XL,XM,XP
M28776/5-017L,M,P	J1MAWT-18XL,XM,XP
M28776/5-018L,M,P	J1MAWT-26XL,XM,XP
M28776/5-019L,M,P	J1MAPT-5XL,XM,XP
M28776/5-020L,M,P	J1MAPT-6XL,XM,XP
M28776/5-021L,M,P	J1MAPT-9XL,XM,XP
M28776/5-022L,M,P	J1MAPT-12XL,XM,XP
M28776/5-023L,M,P	J1MAPT-18XL,XM,XP
M28776/5-024L,M,P	J1MAPT-26XL,XM,XP
M28776/5-025L,M,P	J1MACT-5XL,XM,XP
M28776/5-026L,M,P	J1MACT-6XL,XM,XP
M28776/5-027L,M,P	J1MACT-9XL,XM,XP
M28776/5-028L,M,P	J1MACT-12XL,XM,XP
M28776/5-029L,M,P	J1MACT-18XL,XM,XP
M28776/5-030L,M,P	J1MACT-26XL,XM,XP
M28776/5-031L,M,P	J1MACT-5XLS,XMS,XPS
M28776/5-032L,M,P	J1MACT-6XLS,XMS,XPS
M28776/5-033L,M,P	J1MACT-9XLS,XMS,XPS
M28776/5-034L,M,P	J1MACT-12XLS,XMS,XPS
M28776/5-035L,M,P	J1MACT-18XLS,XMS,XPS
M28776/5-036L,M,P	J1MACT-26XLS,XMS,XPS

Catalog 5-1773450-5
Revised 3-13

www.te.com

Dimensions are shown for reference purposes only. Specifications subject to change.

Dimensions are in millimeters unless otherwise specified.

USA: +1 800 522 6752
Asia Pacific: +86 0 400 820 6015
UK: +44 800 267 666

For additional support numbers please visit www.te.com

CII Hybrid Relays (Continued)

MIL-PRF-28776/6

Military Part Number	CII Part Number
M28776/6-001L,M	JMGAT-5L,M
M28776/6-002L,M	JMGAT-6L,M
M28776/6-003L,M	JMGAT-9L,M
M28776/6-004L,M	JMGAT-12L,M
M28776/6-005L,M	JMGAT-18L,M
M28776/6-006L,M	JMGAT-26L,M
M28776/6-007L,M	JMGAT-5LW,MW
M28776/6-008L,M	JMGAT-6LW,MW
M28776/6-009L,M	JMGAT-9LW,MW
M28776/6-010L,M	JMGAT-12LW,MW
M28776/6-011L,M	JMGAT-18LW,MW
M28776/6-012L,M	JMGAT-26LW,MW

MIL-PRF-28776/7

Military Part Number	CII Part Number
M28776/7-001L,M	JMGST-5L,M
M28776/7-002L,M	JMGST-6L,M
M28776/7-003L,M	JMGST-9L,M
M28776/7-004L,M	JMGST-12L,M
M28776/7-005L,M	JMGST-18L,M
M28776/7-006L,M	JMGST-26L,M
M28776/7-007L,M	JMGST-5LW,MW
M28776/7-008L,M	JMGST-6LW,MW
M28776/7-009L,M	JMGST-9LW,MW
M28776/7-010L,M	JMGST-12LW,MW
M28776/7-011L,M	JMGST-18LW,MW
M28776/7-012L,M	JMGST-26LW,MW

CII Electromechanical Relays

MIL-PRF-39016/6

Military Part Number	CII Part Number
M39016/6-104L,M,P	HFW1130K06L,M,P
M39016/6-105L,M,P	HFW1230K06,M,P
M39016/6-107L,M,P	HFW1131K04,M,P
M39016/6-109L,M,P	HFW1201K45,M,P
M39016/6-111L,M,P	HFW1130G01,M,P
M39016/6-112L,M,P	HFW1230G01,M,P
M39016/6-114L,M,P	HFW1131G01,M,P
M39016/6-116L,M,P	HFW1201G01,M,P
M39016/6-118L,M,P	HFW1130F01,M,P
M39016/6-119L,M,P	HFW1230F01,M,P
M39016/6-121L,M,P	HFW1131F01,M,P
M39016/6-123L,M,P	HFW1201F01,M,P
M39016/6-125L,M,P	HFW1231K05,M,P
M39016/6-126L,M,P	HFW1231G01,M,P
M39016/6-127L,M,P	HFW1231F01,M,P
M39016/6-128L,M,P	HFW1106K12,M,P
M39016/6-129L,M,P	HFW1101K06,M,P
M39016/6-130L,M,P	HFW1101G01,M,P
M39016/6-131L,M,P	HFW1101F01,M,P
M39016/6-132L,M,P	HFW1130L01,M,P
M39016/6-133L,M,P	HFW1230L01,M,P
M39016/6-135L,M,P	HFW1131L01,M,P
M39016/6-136L,M,P	HFW1231L01,M,P
M39016/6-138L,M,P	HFW1101L01,M,P
M39016/6-139L,M,P	HFW1201L01,M,P
M39016/6-141L,M,P	HFW1230K11,M,P
M39016/6-142L,M,P	HFW1201K103,M,P
M39016/6-143L,M,P	HFW1230G03,M,P
M39016/6-144L,M,P	HFW1201G14,M,P
M39016/6-145L,M,P	HFW1230F03,M,P
M39016/6-146L,M,P	HFW1201F15,M,P
M39016/6-147L,M,P	HFW1230L03,M,P
M39016/6-148L,M,P	HFW1201L06,M,P
M39016/6-204L,M,P	HFW1130K07,M,P
M39016/6-205L,M,P	HFW1230K07,M,P
M39016/6-207L,M,P	HFW1131K05,M,P
M39016/6-209L,M,P	HFW1201K46,M,P
M39016/6-211L,M,P	HFW1130G02,M,P
M39016/6-212L,M,P	HFW1230G02,M,P
M39016/6-214L,M,P	HFW1130G02,M,P

MIL-PRF-39016/6 (continued)

Military Part Number	CII Part Number
M39016/6-216L,M,P	HFW1201G02,M,P
M39016/6-218L,M,P	HFW1130F02,M,P
M39016/6-219L,M,P	HFW1230F02,M,P
M39016/6-221L,M,P	HFW1131F02,M,P
M39016/6-223L,M,P	HFW1201F02,M,P
M39016/6-225L,M,P	HFW1231K06,M,P
M39016/6-226L,M,P	HFW1231G02,M,P
M39016/6-227L,M,P	HFW1231F02,M,P
M39016/6-228L,M,P	HFW1106K13,M,P
M39016/6-229L,M,P	HFW1101K07,M,P
M39016/6-230L,M,P	HFW1101G02,M,P
M39016/6-231L,M,P	HFW1101F02,M,P
M39016/6-232L,M,P	HFW1130L02,M,P
M39016/6-233L,M,P	HFW1230L02,M,P
M39016/6-235L,M,P	HFW1131L02,M,P
M39016/6-236L,M,P	HFW1231L02,M,P
M39016/6-238L,M,P	HFW1101L02,M,P
M39016/6-239L,M,P	HFW1201L02,M,P
M39016/6-241L,M,P	HFW1230K12,M,P
M39016/6-242L,M,P	HFW1201K104,M,P
M39016/6-243L,M,P	HFW1230G04,M,P
M39016/6-244L,M,P	HFW1201G15,M,P
M39016/6-245L,M,P	HFW1230F04,M,P
M39016/6-246L,M,P	HFW1201F16,M,P
M39016/6-247L,M,P	HFW1230L04,M,P
M39016/6-248L,M,P	HFW1201L07,M,P

MIL-PRF-39016/7

Military Part Number	CII Part Number
M39016/7-013L,M,P	J1MAW-5XL,XM,XP
M39016/7-014L,M,P	J1MAP-5XL,XM,XP
M39016/7-015L,M,P	J1MAW-6XL,XM,XP
M39016/7-016L,M,P	J1MAP-6XL,XM,XP
M39016/7-017L,M,P	J1MAW-9XL,XM,XP
M39016/7-018L,M,P	J1MAP-9XL,XM,XP
M39016/7-019L,M,P	J1MAW-12XL,XM,XP
M39016/7-020L,M,P	J1MAP-12XL,XM,XP
M39016/7-021L,M,P	J1MAW-18XL,XM,XP
M39016/7-022L,M,P	J1MAP-18XL,XM,XP
M39016/7-023L,M,P	J1MAW-26XL,XM,XP
M39016/7-024L,M,P	J1MAP-26XL,XM,XP

Catalog 5-1773450-5
Revised 3-13

www.te.com

Dimensions are shown for reference purposes only. Specifications subject to change.

Dimensions are in millimeters unless otherwise specified.

USA: +1 800 522 6752
Asia Pacific: +86 0 400 820 6015
UK: +44 800 267 666

For additional support numbers please visit www.te.com

CII Electromechanical Relays (Continued)

MIL-PRF-39016/7 (continued)

Military Part Number	CII Part Number
M39016/7-025L,M,P	J1MAC-5XL,XM,XP
M39016/7-026L,M,P	J1MAC-6XL,XM,XP
M39016/7-027L,M,P	J1MAC-9XL,XM,XP
M39016/7-028L,M,P	J1MAC-12XL,XM,XP
M39016/7-029L,M,P	J1MAC-18XL,XM,XP
M39016/7-030L,M,P	J1MAC-26XL,XM,XP
M39016/7-031L,M,P	J1MAC-5XLS,XMS,XPS
M39016/7-032L,M,P	J1MAC-6XLS,XMS,XPS
M39016/7-033L,M,P	J1MAC-9XLS,XMS,XPS
M39016/7-034L,M,P	J1MAC-12XLS,XMS,XPS
M39016/7-035L,M,P	J1MAC-18XLS,XMS,XPS
M39016/7-036L,M,P	J1MAC-26XLS,XMS,XPS

MIL-PRF-39016/9

Military Part Number	CII Part Number
M39016/9-013L,M,P	JMAW-5XL,XM,XP
M39016/9-014L,M,P	JMAW-6XL,XM,XP
M39016/9-015L,M,P	JMAW-9XL,XM,XP
M39016/9-016L,M,P	JMAW-12XL,XM,XP
M39016/9-017L,M,P	JMAW-18XL,XM,XP
M39016/9-018L,M,P	JMAW-26XL,XM,XP
M39016/9-019L,M,P	JMAP-5XL,XM,XP
M39016/9-020L,M,P	JMAP-6XL,XM,XP
M39016/9-021L,M,P	JMAP-9XL,XM,XP
M39016/9-022L,M,P	JMAP-12XL,XM,XP
M39016/9-023L,M,P	JMAP-18XL,XM,XP
M39016/9-024L,M,P	JMAP-26XL,XM,XP
M39016/9-051L,M,P	JMAW-30XL,XM,XP
M39016/9-052L,M,P	JMAP-30XL,XM,XP
M39016/9-057L,M,P	JMAC-5XL,XM,XP
M39016/9-058L,M,P	JMAC-6XL,XM,XP
M39016/9-059L,M,P	JMAC-9XL,XM,XP
M39016/9-060L,M,P	JMAC-12XL,XM,XP
M39016/9-061L,M,P	JMAC-18XL,XM,XP
M39016/9-062L,M,P	JMAC-26XL,XM,XP
M39016/9-063L,M,P	JMAC-30XL,XM,XP
M39016/9-071L,M,P	JMAC-5XLS,XMS,XPS
M39016/9-072L,M,P	JMAC-6XLS,XMS,XPS
M39016/9-073L,M,P	JMAC-9XLS,XMS,XPS
M39016/9-074L,M,P	JMAC-12XLS,XMS,XPS
M39016/9-075L,M,P	JMAC-18XLS,XMS,XPS
M39016/9-076L,M,P	JMAC-26XLS,XMS,XPS
M39016/9-077L,M,P	JMAC-30XLS,XMS,XPS
M39016/9-106L,M,P	JMAC-5XLS,XMS,XPS
M39016/9-107L,M,P	JMAC-6XLS,XMS,XPS
M39016/9-108L,M,P	JMAC-9XLS,XMS,XPS
M39016/9-109L,M,P	JMAC-12XLS,XMS,XPS
M39016/9-110L,M,P	JMAC-18XLS,XMS,XPS
M39016/9-111L,M,P	JMAC-26XLS,XMS,XPS
M39016/9-112L,M,P	JMAC-30XLS,XMS,XPS

MIL-PRF-39016/10

Military Part Number	CII Part Number
M39016/10-017L,M,P	J1MSW-5XL,XM,XP
M39016/10-018L,M,P	J1MSP-5XL,XM,XP
M39016/10-019L,M,P	J1MSW-6XL,XM,XP
M39016/10-020L,M,P	J1MSP-6XL,XM,XP
M39016/10-021L,M,P	J1MSW-12XL,XM,XP
M39016/10-022L,M,P	J1MSP-12XL,XM,XP
M39016/10-023L,M,P	J1MSW-26XL,XM,XP
M39016/10-024L,M,P	J1MSP-26XL,XM,XP

MIL-PRF-39016/10 (continued)

Military Part Number	CII Part Number
M39016/10-025L,M,P	J1MSW-32XL,XM,XP
M39016/10-026L,M,P	J1MSP-32XL,XM,XP
M39016/10-027L,M,P	J1MSW-40XL,XM,XP
M39016/10-028L,M,P	J1MSP-40XL,XM,XP
M39016/10-029L,M,P	J1MSW-9XL,XM,XP
M39016/10-030L,M,P	J1MSP-9XL,XM,XP
M39016/10-031L,M,P	J1MSW-18XL,XM,XP
M39016/10-032L,M,P	J1MSP-18XL,XM,XP
M39016/10-033L,M,P	J1MSC-5XL,XM,XP
M39016/10-034L,M,P	J1MSC-6XL,XM,XP
M39016/10-035L,M,P	J1MSC-12XL,XM,XP
M39016/10-036L,M,P	J1MSC-26XL,XM,XP
M39016/10-037L,M,P	J1MSC-32XL,XM,XP
M39016/10-038L,M,P	J1MSC-40XL,XM,XP
M39016/10-039L,M,P	J1MSC-9XL,XM,XP
M39016/10-040L,M,P	J1MSC-18XL,XM,XP
M39016/10-041L,M,P	J1MSC-5XLS,XMS,XPS
M39016/10-042L,M,P	J1MSC-6XLS,XMS,XPS
M39016/10-043L,M,P	J1MSC-12XLS,XMS,XPS
M39016/10-044L,M,P	J1MSC-26XLS,XMS,XPS
M39016/10-045L,M,P	J1MSC-32XLS,XMS,XPS
M39016/10-046L,M,P	J1MSC-40XLS,XMS,XPS
M39016/10-047L,M,P	J1MSC-9XLS,XMS,XPS
M39016/10-048L,M,P	J1MSC-18XLS,XMS,XPS

MIL-PRF-39016/11

Military Part Number	CII Part Number
M39016/11-017L,M,P	JMSW-5XL,XM,XP
M39016/11-018L,M,P	JMSP-5XL,XM,XP
M39016/11-019L,M,P	JMSW-6XL,XM,XP
M39016/11-020L,M,P	JMSP-6XL,XM,XP
M39016/11-021L,M,P	JMSW-12XL,XM,XP
M39016/11-022L,M,P	JMSP-12XL,XM,XP
M39016/11-023L,M,P	JMSW-26XL,XM,XP
M39016/11-024L,M,P	JMSP-26XL,XM,XP
M39016/11-025L,M,P	JMSW-32XL,XM,XP
M39016/11-026L,M,P	JMSP-32XL,XM,XP
M39016/11-027L,M,P	JMSW-48XL,XM,XP
M39016/11-028L,M,P	JMSP-48XL,XM,XP
M39016/11-029L,M,P	JMSW-9XL,XM,XP
M39016/11-030L,M,P	JMSP-9XL,XM,XP
M39016/11-031L,M,P	JMSW-18XL,XM,XP
M39016/11-032L,M,P	JMSP-18XL,XM,XP
M39016/11-033L,M,P	JMSC-5XL,XM,XP
M39016/11-034L,M,P	JMSC-6XL,XM,XP
M39016/11-035L,M,P	JMSC-12XL,XM,XP
M39016/11-036L,M,P	JMSC-26XL,XM,XP
M39016/11-037L,M,P	JMSC-36XL,XM,XP
M39016/11-038L,M,P	JMSC-48XL,XM,XP
M39016/11-039L,M,P	JMSC-9XL,XM,XP
M39016/11-040L,M,P	JMSC-18XL,XM,XP
M39016/11-041L,M,P	JMSC-5XLS,XMS,XPS
M39016/11-042L,M,P	JMSC-6XLS,XMS,XPS
M39016/11-043L,M,P	JMSC-12XLS,XMS,XPS
M39016/11-044L,M,P	JMSC-26XLS,XMS,XPS
M39016/11-045L,M,P	JMSC-36XLS,XMS,XPS
M39016/11-046L,M,P	JMSC-48XLS,XMS,XPS
M39016/11-047L,M,P	JMSC-9XLS,XMS,XPS
M39016/11-048L,M,P	JMSC-18XLS,XMS,XPS

Catalog 5-1773450-5
Revised 3-13

www.te.com

Dimensions are shown for reference purposes only. Specifications subject to change.

Dimensions are in millimeters unless otherwise specified.

USA: +1 800 522 6752
Asia Pacific: +86 0 400 820 6015
UK: +44 800 267 666

For additional support numbers please visit www.te.com

CII Electromechanical Relays (Continued)

MIL-PRF-39016/13

Military Part Number	CII Part Number
M39016/13-055L	3SBC1501A2
M39016/13-055M	3SBC1516A2
M39016/13-055P	3SBC2000A2
M39016/13-056L	3SBC1502A2
M39016/13-056M	3SBC1517A2
M39016/13-056P	3SBC2001A2
M39016/13-057L	3SBC1503A2
M39016/13-057M	3SBC1518A2
M39016/13-057P	3SBC2002A2
M39016/13-058L	3SBC1504A2
M39016/13-058M	3SBC1519A2
M39016/13-058P	3SBC2003A2
M39016/13-059L	3SBC1505A2
M39016/13-059M	3SBC1520A2
M39016/13-059P	3SBC2004A2
M39016/13-060L	3SBC1506A2
M39016/13-060M	3SBC1521A2
M39016/13-060P	3SBC2005A2
M39016/13-061L	3SBC1507A2
M39016/13-061M	3SBC1522A2
M39016/13-061P	3SBC2006A2
M39016/13-062L	3SBC1508A2
M39016/13-062M	3SBC1523A2
M39016/13-062P	3SBC2007A2
M39016/13-063L	3SBC1509A2
M39016/13-063M	3SBC1524A2
M39016/13-063P	3SBC2008A2
M39016/13-064L	3SBC1510A2
M39016/13-064M	3SBC1525A2
M39016/13-064P	3SBC2009A2
M39016/13-065L	3SBC1511A2
M39016/13-065M	3SBC1526A2
M39016/13-065P	3SBC2010A2
M39016/13-066L	3SBC1512A2
M39016/13-066M	3SBC1527A2
M39016/13-066P	3SBC2011A2
M39016/13-067L	3SBC1513A2
M39016/13-067M	3SBC1528A2
M39016/13-067P	3SBC2012A2
M39016/13-068L	3SBC1514A2
M39016/13-068M	3SBC1529A2
M39016/13-068P	3SBC2013A2
M39016/13-069L	3SBC1515A2
M39016/13-069M	3SBC1530A2
M39016/13-069P	3SBC2014A2
M39016/13-070L	3SBC1532A2
M39016/13-070M	3SBC1535A2
M39016/13-070P	3SBC2015A2
M39016/13-071L	3SBC1533A2
M39016/13-071M	3SBC1536A2
M39016/13-071P	3SBC2016A2
M39016/13-072L	3SBC1534A2
M39016/13-072M	3SBC1537A2
M39016/13-072P	3SBC2017A2
M39016/13-073L	3SBC1538A2
M39016/13-073M	3SBC1547A2
M39016/13-073P	3SBC2018A2
M39016/13-074L	3SBC1539A2
M39016/13-074M	3SBC1548A2
M39016/13-074P	3SBC2019A2
M39016/13-075L	3SBC1540A2

MIL-PRF-39016/13 (continued)

Military Part Number	CII Part Number
M39016/13-075M	3SBC1549A2
M39016/13-075P	3SBC2020A2
M39016/13-076L	3SBC1541A2
M39016/13-076M	3SBC1550A2
M39016/13-076P	3SBC2021A2
M39016/13-077L	3SBC1542A2
M39016/13-077M	3SBC1551A2
M39016/13-077P	3SBC2022A2
M39016/13-078L	3SBC1543A2
M39016/13-078M	3SBC1552A2
M39016/13-078P	3SBC2023A2
M39016/13-079L	3SBC1544A2
M39016/13-079M	3SBC1553A2
M39016/13-079P	3SBC2024A2
M39016/13-080L	3SBC1545A2
M39016/13-080M	3SBC1554A2
M39016/13-080P	3SBC2025A2
M39016/13-081L	3SBC1546A2
M39016/13-081M	3SBC1555A2
M39016/13-081P	3SBC2026A2
M39016/13-082L	3SBC1582A2
M39016/13-082M	3SBC1589A2
M39016/13-082P	3SBC2027A2
M39016/13-083L	3SBC1583A2\
M39016/13-083M	3SBC1590A2
M39016/13-083P	3SBC2028A2
M39016/13-084L	3SBC1584A2
M39016/13-084M	3SBC1591A2
M39016/13-084P	3SBC2029A2
M39016/13-085L	3SBC1585A2
M39016/13-085M	3SBC1592A2
M39016/13-085P	3SBC2030A2
M39016/13-086L	3SBC1586A2
M39016/13-086M	3SBC1593A2
M39016/13-086P	3SBC2031A2
M39016/13-087L	3SBC1587A2
M39016/13-087M	3SBC1594A2
M39016/13-087P	3SBC2032A2
M39016/13-088L	3SBC1588A2
M39016/13-088M	3SBC1595A2
M39016/13-088P	3SBC2033A2
M39016/13-089L	3SBC1655A2
M39016/13-089M	3SBC1658A2
M39016/13-089P	3SBC2034A2
M39016/13-090L	3SBC1656A2
M39016/13-090M	3SBC1659A2
M39016/13-090P	3SBC2035A2
M39016/13-091L	3SBC1657A2
M39016/13-091M	3SBC1660A2
M39016/13-091P	3SBC2036A2
M39016/13-092L	3SBC1758A2
M39016/13-092M	3SBC1784A2
M39016/13-092P	3SBC2037A2
M39016/13-093L	3SBC1759A2
M39016/13-093M	3SBC1785A2
M39016/13-093P	3SBC2038A2
M39016/13-094L	3SBC1760A2
M39016/13-094M	3SBC1786A2
M39016/13-094P	3SBC2039A2
M39016/13-095L	3SBC1761A2
M39016/13-095M	3SBC1787A2

Catalog 5-1773450-5
Revised 3-13

www.te.com

Dimensions are shown for reference purposes only. Specifications subject to change.

Dimensions are in millimeters unless otherwise specified.

USA: +1 800 522 6752
Asia Pacific: +86 0 400 820 6015
UK: +44 800 267 666

For additional support numbers please visit www.te.com

CII Electromechanical Relays (Continued)

MIL-PRF-39016/13 (continued)

Military Part Number	CII Part Number
M39016/13-095P	3SBC2040A2
M39016/13-096L	3SBC1762A2
M39016/13-096M	3SBC1788A2
M39016/13-096P	3SBC2041A2
M39016/13-097L	3SBC1763A2
M39016/13-097M	3SBC1789A2
M39016/13-097P	3SBC2042A2
M39016/13-098L	3SBC1764A2
M39016/13-098M	3SBC1790A2
M39016/13-098P	3SBC2043A2
M39016/13-099L	3SBC1765A2
M39016/13-099M	3SBC1791A2
M39016/13-099P	3SBC2044A2
M39016/13-100L	3SBC1766A2
M39016/13-100M	3SBC1792A2
M39016/13-100P	3SBC2045A2
M39016/13-101L	3SBC1767A2
M39016/13-101M	3SBC1793A2
M39016/13-101P	3SBC2046A2
M39016/13-102L	3SBC1768A2
M39016/13-102M	3SBC1794A2
M39016/13-102P	3SBC2047A2
M39016/13-103L	3SBC1769A2
M39016/13-103M	3SBC1795A2
M39016/13-103P	3SBC2048A2
M39016/13-104L	3SBC1770A2
M39016/13-104M	3SBC1796A2
M39016/13-104P	3SBC2049A2
M39016/13-105L	3SBC1771A2
M39016/13-105M	3SBC1797A2
M39016/13-105P	3SBC2050A2
M39016/13-106L	3SBC1772A2
M39016/13-106M	3SBC1798A2
M39016/13-106P	3SBC2051A2
M39016/13-107L	3SBC1773A2
M39016/13-107M	3SBC1799A2
M39016/13-107P	3SBC2052A2
M39016/13-108L	3SBC1774A2
M39016/13-108M	3SBC1800A2
M39016/13-108P	3SBC2053A2
M39016/13-109L	3SBC1775A2
M39016/13-109M	3SBC1801A2
M39016/13-109P	3SBC2054A2
M39016/13-110L	3SBC1776A2
M39016/13-110M	3SBC1802A2
M39016/13-110P	3SBC2055A2
M39016/13-111L	3SBC1777A2
M39016/13-111M	3SBC1803A2
M39016/13-111P	3SBC2056A2
M39016/13-112L	3SBC1778A2
M39016/13-112M	3SBC1804A2
M39016/13-112P	3SBC2057A2
M39016/13-113L	3SBC1779A2
M39016/13-113M	3SBC1805A2
M39016/13-113P	3SBC2058A2
M39016/13-114L	3SBC1780A2
M39016/13-114M	3SBC1806A2
M39016/13-114P	3SBC2059A2
M39016/13-115L	3SBC1781A2
M39016/13-115M	3SBC1807A2
M39016/13-115P	3SBC2060A2

MIL-PRF-39016/13 (continued)

Military Part Number	CII Part Number
M39016/13-116L	3SBC1782A2
M39016/13-116M	3SBC1808A2
M39016/13-116P	3SBC2061A2
M39016/13-117L	3SBC1783A2
M39016/13-117M	3SBC1809A2
M39016/13-117P	3SBC2062A2
M39016/13-118L	3SBC2141A2
M39016/13-118M	3SBC2148A2
M39016/13-118P	3SBC2155A2
M39016/13-119L	3SBC2142A2
M39016/13-119M	3SBC2149A2
M39016/13-119P	3SBC2156A2
M39016/13-120L	3SBC2143A2
M39016/13-120M	3SBC2150A2
M39016/13-120P	3SBC2157A2
M39016/13-121L	3SBC2144A2
M39016/13-121M	3SBC2151A2
M39016/13-121P	3SBC2158A2
M39016/13-122L	3SBC2145A2
M39016/13-122M	3SBC2152A2
M39016/13-122P	3SBC2159A2
M39016/13-123L	3SBC2146A2
M39016/13-123M	3SBC2153A2
M39016/13-123P	3SBC2160A2
M39016/13-124L	3SBC2147A2
M39016/13-124M	3SBC2154A2
M39016/13-124P	3SBC2161A2

MIL-PRF-39016/14

Military Part Number	CII Part Number
M39016/14-001L	3SBH1141A2
M39016/14-001M	3SBH1138A2
M39016/14-002L	3SBH1142A2
M39016/14-002M	3SBH1139A2
M39016/14-003L	3SBH1143A2
M39016/14-003M	3SBH1140A2
M39016/14-004L	3SBH1144A2
M39016/14-004M	3SBH1129A2
M39016/14-005L	3SBH1145A2
M39016/14-005M	3SBH1130A2
M39016/14-006L	3SBH1146A2
M39016/14-006M	3SBH1148A2
M39016/14-007L	3SBH1147A2
M39016/14-007M	3SBH1149A2
M39016/14-008L	3SBH1151A2
M39016/14-008M	3SBH1165A2
M39016/14-009L	3SBH1179A2
M39016/14-009M	3SBH1209A2
M39016/14-010L	3SBH1180A2
M39016/14-010M	3SBH1210A2
M39016/14-011L	3SBH1181A2
M39016/14-011M	3SBH1211A2
M39016/14-012L	3SBH1182A2
M39016/14-012M	3SBH1212A2
M39016/14-013L	3SBH1183A2
M39016/14-013M	3SBH1213A2
M39016/14-014L	3SBH1184A2
M39016/14-014M	3SBH1214A2
M39016/14-015L	3SBH1185A2
M39016/14-015M	3SBH1215A2

Catalog 5-1773450-5
Revised 3-13

www.te.com

Dimensions are shown for reference purposes only. Specifications subject to change.

Dimensions are in millimeters unless otherwise specified.

USA: +1 800 522 6752
Asia Pacific: +86 0 400 820 6015
UK: +44 800 267 666

For additional support numbers please visit www.te.com

CII Electromechanical Relays (Continued)

MIL-PRF-39016/15

Military Part Number	CII Part Number
M39016/15-029L,M,P	JMAWD-6XL,XM,XP
M39016/15-030L,M,P	JMAWD-9XL,XM,XP
M39016/15-031L,M,P	JMAWD-12XL,XM,XP
M39016/15-032L,M,P	JMAWD-18XL,XM,XP
M39016/15-033L,M,P	JMAWD-26XL,XM,XP
M39016/15-034L,M,P	JMAWD-5XL,XM,XP
M39016/15-035L,M,P	JMAPD-6XL,XM,XP
M39016/15-036L,M,P	JMAPD-9XL,XM,XP
M39016/15-037L,M,P	JMAPD-12XL,XM,XP
M39016/15-038L,M,P	JMAPD-18XL,XM,XP
M39016/15-039L,M,P	JMAPD-26XL,XM,XP
M39016/15-040L,M,P	JMAPD-5XL,XM,XP
M39016/15-065L,M,P	JMAWDG-6XL,XM,XP
M39016/15-066L,M,P	JMAWDG-9XL,XM,XP
M39016/15-067L,M,P	JMAWDG-12XL,XM,XP
M39016/15-068L,M,P	JMAWDG-18XL,XM,XP
M39016/15-069L,M,P	JMAWDG-26XL,XM,XP
M39016/15-070L,M,P	JMAWDG-5XL,XM,XP
M39016/15-077L,M,P	JMACD-6XL,XM,XP
M39016/15-078L,M,P	JMACD-9XL,XM,XP
M39016/15-079L,M,P	JMACD-12XL,XM,XP
M39016/15-080L,M,P	JMACD-18XL,XM,XP
M39016/15-081L,M,P	JMACD-26XL,XM,XP
M39016/15-082L,M,P	JMACD-5XL,XM,XP
M39016/15-089L,M,P	JMACDG-6XL,XM,XP
M39016/15-090L,M,P	JMACDG-9XL,XM,XP
M39016/15-091L,M,P	JMACDG-12XL,XM,XP
M39016/15-092L,M,P	JMACDG-18XL,XM,XP
M39016/15-093L,M,P	JMACDG-26XL,XM,XP
M39016/15-094L,M,P	JMACDG-5XL,XM,XP
M39016/15-101L,M,P	JMACD-6XLS,XMS,XPS
M39016/15-102L,M,P	JMACD-9XLS,XMS,XPS
M39016/15-103L,M,P	JMACD-12XLS,XMS,XPS
M39016/15-104L,M,P	JMACD-18XLS,XMS,XPS
M39016/15-105L,M,P	JMACD-26XLS,XMS,XPS
M39016/15-106L,M,P	JMACD-5XLS,XMS,XPS
M39016/15-113L,M,P	JMACDG-6XLS,XMS,XPS
M39016/15-114L,M,P	JMACDG-9XLS,XMS,XPS
M39016/15-115L,M,P	JMACDG-12XLS,XMS,XPS
M39016/15-116L,M,P	JMACDG-18XLS,XMS,XPS
M39016/15-117L,M,P	JMACDG-26XLS,XMS,XPS
M39016/15-118L,M,P	JMACDG-5XLS,XMS,XPS
M39016/15-125L,M,P	JMACD-6XLS,XMS,XPS
M39016/15-126L,M,P	JMACD-9XLS,XMS,XPS
M39016/15-127L,M,P	JMACD-12XLS,XMS,XPS
M39016/15-128L,M,P	JMACD-18XLS,XMS,XPS
M39016/15-129L,M,P	JMACD-26XLS,XMS,XPS
M39016/15-130L,M,P	JMACD-5XLS,XMS,XPS

MIL-PRF-39016/16

Military Part Number	CII Part Number
M39016/16-017L,M,P	JMSWD-5XL,XM,XP
M39016/16-018L,M,P	JMSWD-6XL,XM,XP
M39016/16-019L,M,P	JMSWD-12XL,XM,XP
M39016/16-020L,M,P	JMSWD-26XL,XM,XP
M39016/16-021L,M,P	JMSWD-36XL,XM,XP
M39016/16-022L,M,P	JMSWD-48XL,XM,XP
M39016/16-023L,M,P	JMSWD-9XL,XM,XP
M39016/16-024L,M,P	JMSWD-18XL,XM,XP
M39016/16-025L,M,P	JMSPD-5XL,XM,XP
M39016/16-026L,M,P	JMSPD-6XL,XM,XP

MIL-PRF-39016/16 (continued)

Military Part Number	CII Part Number
M39016/16-027L,M,P	JMSPD-12XL,XM,XP
M39016/16-028L,M,P	JMSPD-26XL,XM,XP
M39016/16-029L,M,P	JMSPD-36XL,XM,XP
M39016/16-030L,M,P	JMSPD-48XL,XM,XP
M39016/16-031L,M,P	JMSPD-9XL,XM,XP
M39016/16-032L,M,P	JMSPD-18XL,XM,XP
M39016/16-033L,M,P	JMSCD-5XL,XM,XP
M39016/16-034L,M,P	JMSCD-6XL,XM,XP
M39016/16-035L,M,P	JMSCD-12XL,XM,XP
M39016/16-036L,M,P	JMSCD-26XL,XM,XP
M39016/16-037L,M,P	JMSCD-36XL,XM,XP
M39016/16-038L,M,P	JMSCD-48XL,XM,XP
M39016/16-039L,M,P	JMSCD-9XL,XM,XP
M39016/16-040L,M,P	JMSCD-18XL,XM,XP
M39016/16-041L,M,P	JMSCD-5XLS,XMS,XPS
M39016/16-042L,M,P	JMSCD-6XLS,XMS,XPS
M39016/16-043L,M,P	JMSCD-12XLS,XMS,XPS
M39016/16-044L,M,P	JMSCD-26XLS,XMS,XPS
M39016/16-045L,M,P	JMSCD-36XLS,XMS,XPS
M39016/16-046L,M,P	JMSCD-48XLS,XMS,XPS
M39016/16-047L,M,P	JMSCD-9XLS,XMS,XPS
M39016/16-048L,M,P	JMSCD-18XLS,XMS,XPS

MIL-PRF-39016/17

Military Part Number	CII Part Number
M39016/17-025L,M,P	JMGAP-5L,M,P
M39016/17-026L,M,P	JMGAP-6L,M,P
M39016/17-027L,M,P	JMGAP-9L,M,P
M39016/17-028L,M,P	JMGAP-12L,M,P
M39016/17-029L,M,P	JMGAP-18L,M,P
M39016/17-030L,M,P	JMGAP-26L,M,P
M39016/17-031L,M,P	JMGAC-5L,M,P
M39016/17-032L,M,P	JMGAC-6L,M,P
M39016/17-033L,M,P	JMGAC-9L,M,P
M39016/17-034L,M,P	JMGAC-12L,M,P
M39016/17-035L,M,P	JMGAC-18L,M,P
M39016/17-036L,M,P	JMGAC-26L,M,P
M39016/17-037L,M,P	JMGAC-5LW,MW,PW
M39016/17-038L,M,P	JMGAC-6LW,MW,PW
M39016/17-039L,M,P	JMGAC-9LW,MW,PW
M39016/17-040L,M,P	JMGAC-12LW,MW,PW
M39016/17-041L,M,P	JMGAC-18LW,MW,PW
M39016/17-042L,M,P	JMGAC-26LW,MW,PW
M39016/17-043L,M,P	JMGACG-5L,M,P
M39016/17-044L,M,P	JMGACG-6L,M,P
M39016/17-045L,M,P	JMGACG-9L,M,P
M39016/17-046L,M,P	JMGACG-12L,M,P
M39016/17-047L,M,P	JMGACG-18L,M,P
M39016/17-048L,M,P	JMGACG-26L,M,P
M39016/17-049L,M,P	JMGACG-5LW,MW,PW
M39016/17-050L,M,P	JMGACG-6LW,MW,PW
M39016/17-051L,M,P	JMGACG-9LW,MW,PW
M39016/17-052L,M,P	JMGACG-12LW,MW,PW
M39016/17-053L,M,P	JMGACG-18LW,MW,PW
M39016/17-054L,M,P	JMGACG-26LW,MW,PW

MIL-PRF-39016/18

Military Part Number	CII Part Number
M39016/18-025L,M,P	JMGAPD-5L,M,P
M39016/18-026L,M,P	JMGAPD-6L,M,P
M39016/18-027L,M,P	JMGAPD-9L,M,P

Catalog 5-1773450-5
Revised 3-13

www.te.com

Dimensions are shown for reference purposes only. Specifications subject to change.

Dimensions are in millimeters unless otherwise specified.

USA: +1 800 522 6752
Asia Pacific: +86 0 400 820 6015
UK: +44 800 267 666

For additional support numbers please visit www.te.com

CII Electromechanical Relays (Continued)

MIL-PRF-39016/18 (continued)

Military Part Number	CII Part Number
M39016/18-028L,M,P	JMGAPD-12L,M,P
M39016/18-029L,M,P	JMGAPD-18L,M,P
M39016/18-030L,M,P	JMGAPD-26L,M,P
M39016/18-031L,M,P	JMGACD-5L,M,P
M39016/18-032L,M,P	JMGACD-6L,M,P
M39016/18-033L,M,P	JMGACD-9L,M,P
M39016/18-034L,M,P	JMGACD-12L,M,P
M39016/18-035L,M,P	JMGACD-18L,M,P
M39016/18-036L,M,P	JMGACD-26L,M,P
M39016/18-037L,M,P	JMGACD-5LW,MW,PW
M39016/18-038L,M,P	JMGACD-6LW,MW,PW
M39016/18-039L,M,P	JMGACD-9LW,MW,PW
M39016/18-040L,M,P	JMGACD-12LW,MW,PW
M39016/18-041L,M,P	JMGACD-18LW,MW,PW
M39016/18-042L,M,P	JMGACD-26LW,MW,PW
M39016/18-043L,M,P	JMGACDG-5L,M,P
M39016/18-044L,M,P	JMGACDG-6L,M,P
M39016/18-045L,M,P	JMGACDG-9L,M,P
M39016/18-046L,M,P	JMGACDG-12L,M,P
M39016/18-047L,M,P	JMGACDG-18L,M,P
M39016/18-048L,M,P	JMGACDG-26L,M,P
M39016/18-049L,M,P	JMGACDG-5LW,MW,PW
M39016/18-050L,M,P	JMGACDG-6LW,MW,PW
M39016/18-051L,M,P	JMGACDG-9LW,MW,PW
M39016/18-052L,M,P	JMGACDG-12MW,MW,PW
M39016/18-053L,M,P	JMGACDG-18LW,MW,PW
M39016/18-054L,M,P	JMGACDG-26LW,MW,PW

MIL-PRF-39016/19

Military Part Number	CII Part Number
M39016/19-025L,M,P	JMGAPDD-5L,M,P
M39016/19-026L,M,P	JMGAPDD-6L,M,P
M39016/19-027L,M,P	JMGAPDD-9L,M,P
M39016/19-028L,M,P	JMGAPDD-12L,M,P
M39016/19-029L,M,P	JMGAPDD-18L,M,P
M39016/19-030L,M,P	JMGAPDD-26L,M,P
M39016/19-031L,M,P	JMGACDD-5L,M,P
M39016/19-032L,M,P	JMGACDD-6L,M,P
M39016/19-033L,M,P	JMGACDD-9L,M,P
M39016/19-034L,M,P	JMGACDD-12L,M,P
M39016/19-035L,M,P	JMGACDD-18L,M,P
M39016/19-036L,M,P	JMGACDD-26L,M,P
M39016/19-037L,M,P	JMGACDD-5LW,MW,PW
M39016/19-038L,M,P	JMGACDD-6LW,MW,PW
M39016/19-039L,M,P	JMGACDD-9LW,MW,PW
M39016/19-040L,M,P	JMGACDD-12LW,MW,PW
M39016/19-041L,M,P	JMGACDD-18LW,MW,PW
M39016/19-042L,M,P	JMGACDD-26LW,MW,PW
M39016/19-043L,M,P	JMGACDDG-5L,M,P
M39016/19-044L,M,P	JMGACDDG-6L,M,P
M39016/19-045L,M,P	JMGACDDG-9L,M,P
M39016/19-046L,M,P	JMGACDDG-12L,M,P
M39016/19-047L,M,P	JMGACDDG-18L,M,P
M39016/19-048L,M,P	JMGACDDG-26L,M,P
M39016/19-049L,M,P	JMGACDDG-5LW,MW,PW
M39016/19-050L,M,P	JMGACDDG-6LW,MW,PW
M39016/19-051L,M,P	JMGACDDG-9LW,MW,PW
M39016/19-052L,M,P	JMGACDDG-12LW,MW,PW
M39016/19-053L,M,P	JMGACDDG-18LW,MW,PW
M39016/19-054L,M,P	JMGACDDG-26LW,MW,PW

MIL-PRF-39016/20

Military Part Number	CII Part Number
M39016/20-007L,M,P	JMAWDD-5XL,XM,XP
M39016/20-008L,M,P	JMAWDD-6XL,XM,XP
M39016/20-009L,M,P	JMAWDD-9XL,XM,XP
M39016/20-010L,M,P	JMAWDD-12XL,XM,XP
M39016/20-011L,M,P	JMAWDD-18XL,XM,XP
M39016/20-012L,M,P	JMAWDD-26XL,XM,XP
M39016/20-019L,M,P	JMAWDD-5XL,XM,XP
M39016/20-020L,M,P	JMAWDD-6XL,XM,XP
M39016/20-021L,M,P	JMAWDD-9XL,XM,XP
M39016/20-022L,M,P	JMAWDD-12XL,XM,XP
M39016/20-023L,M,P	JMAWDD-18XL,XM,XP
M39016/20-024L,M,P	JMAWDD-26XL,XM,XP
M39016/20-037L,M,P	JMAPDD-5XL,XM,XP
M39016/20-038L,M,P	JMAPDD-6XL,XM,XP
M39016/20-039L,M,P	JMAPDD-9XL,XM,XP
M39016/20-040L,M,P	JMAPDD-12XL,XM,XP
M39016/20-041L,M,P	JMAPDD-18XL,XM,XP
M39016/20-042L,M,P	JMAPDD-26XL,XM,XP
M39016/20-043L,M,P	JMAPDD-5XL,XM,XP
M39016/20-044L,M,P	JMAPDD-6XL,XM,XP
M39016/20-045L,M,P	JMAPDD-9XL,XM,XP
M39016/20-046L,M,P	JMAPDD-12XL,XM,XP
M39016/20-047L,M,P	JMAPDD-18XL,XM,XP
M39016/20-048L,M,P	JMAPDD-26XL,XM,XP
M39016/20-049L,M,P	JMACDD-5XL,XM,XP
M39016/20-050L,M,P	JMACDD-6XL,XM,XP
M39016/20-051L,M,P	JMACDD-9XL,XM,XP
M39016/20-052L,M,P	JMACDD-12XL,XM,XP
M39016/20-053L,M,P	JMACDD-18XL,XM,XP
M39016/20-054L,M,P	JMACDD-26XL,XM,XP
M39016/20-055L,M,P	JMACDD-5XL,XM,XP
M39016/20-056L,M,P	JMACDD-6XL,XM,XP
M39016/20-057L,M,P	JMACDD-9XL,XM,XP
M39016/20-058L,M,P	JMACDD-12XL,XM,XP
M39016/20-059L,M,P	JMACDD-18XL,XM,XP
M39016/20-060L,M,P	JMACDD-26XL,XM,XP
M39016/20-061L,M,P	JMACDD-5XLS,XMS,XPS
M39016/20-062L,M,P	JMACDD-6XLS,XMS,XPS
M39016/20-063L,M,P	JMACDD-9XLS,XMS,XPS
M39016/20-064L,M,P	JMACDD-12XLS,XMS,XPS
M39016/20-065L,M,P	JMACDD-18XLS,XMS,XPS
M39016/20-066L,M,P	JMACDD-26XLS,XMS,XPS
M39016/20-073L,M,P	JMACDD-5XLS,XMS,XPS
M39016/20-074L,M,P	JMACDD-6XLS,XMS,XPS
M39016/20-075L,M,P	JMACDD-9XLS,XMS,XPS
M39016/20-076L,M,P	JMACDD-12XLS,XMS,XPS
M39016/20-077L,M,P	JMACDD-18XLS,XMS,XPS
M39016/20-078L,M,P	JMACDD-26XLS,XMS,XPS
M39016/20-079L,M,P	JMACDDG-5XLS,XMS,XPS
M39016/20-080L,M,P	JMACDDG-6XL,XM,XP
M39016/20-081L,M,P	JMACDDG-9XL,XM,XP
M39016/20-082L,M,P	JMACDDG-12XL,XM,XP
M39016/20-083L,M,P	JMACDDG-18XL,XM,XP
M39016/20-084L,M,P	JMACDDG-26XL,XM,XP
M39016/20-085L,M,P	JMACDDG-5XL,XM,XP
M39016/20-086L,M,P	JMACDDG-6XL,XM,XP
M39016/20-087L,M,P	JMACDDG-9XL,XM,XP
M39016/20-088L,M,P	JMACDDG-12XL,XM,XP
M39016/20-089L,M,P	JMACDDG-18XL,XM,XP
M39016/20-090L,M,P	JMACDDG-26XL,XM,XP
M39016/20-091L,M,P	JMACDDG-5XLS,XMS,XPS

Catalog 5-1773450-5
Revised 3-13

www.te.com

Dimensions are shown for reference purposes only. Specifications subject to change.

Dimensions are in millimeters unless otherwise specified.

USA: +1 800 522 6752
Asia Pacific: +86 0 400 820 6015
UK: +44 800 267 666

For additional support numbers please visit www.te.com

CII Electromechanical Relays (Continued)

MIL-PRF-39016/20 (continued)

Military Part Number	CII Part Number
M39016/20-092L,M,P	JMACDDG-6XLS,XMS,XPS
M39016/20-093L,M,P	JMACDDG-9XLS,XMS,XPS
M39016/20-094L,M,P	JMACDDG-12XLS,XMS,XPS
M39016/20-095L,M,P	JMACDDG-18XLS,XMS,XPS
M39016/20-096L,M,P	JMACDDG-26XLS,XMS,XPS

MIL-PRF-39016/21

Military Part Number	CII Part Number
M39016/21-007L,M,P	JMSWDD-5XL,XM,XP
M39016/21-008L,M,P	JMSWDD-6XL,XM,XP
M39016/21-009L,M,P	JMSWDD-9XL,XM,XP
M39016/21-010L,M,P	JMSWDD-12XL,XM,XP
M39016/21-011L,M,P	JMSWDD-18XL,XM,XP
M39016/21-012L,M,P	JMSWDD-26XL,XM,XP
M39016/21-019L,M,P	JMSPDD-5XL,XM,XP
M39016/21-020L,M,P	JMSPDD-6XL,XM,XP
M39016/21-021L,M,P	JMSPDD-9XL,XM,XP
M39016/21-022L,M,P	JMSPDD-12XL,XM,XP
M39016/21-023L,M,P	JMSPDD-18XL,XM,XP
M39016/21-024L,M,P	JMSPDD-26XL,XM,XP
M39016/21-029L,M,P	JMSWDD-36XL,XM,XP
M39016/21-030L,M,P	JMSWDD-48XL,XM,XP
M39016/21-031L,M,P	JMSPDD-36XL,XM,XP
M39016/21-032L,M,P	JMSPDD-48XL,XM,XP
M39016/21-033L,M,P	JMSCDD-5XL,XM,XP
M39016/21-034L,M,P	JMSCDD-6XL,XM,XP
M39016/21-035L,M,P	JMSCDD-9XL,XM,XP
M39016/21-036L,M,P	JMSCDD-12XL,XM,XP
M39016/21-037L,M,P	JMSCDD-18XL,XM,XP
M39016/21-038L,M,P	JMSCDD-26XL,XM,XP
M39016/21-039L,M,P	JMSCDD-36XL,XM,XP
M39016/21-040L,M,P	JMSCDD-48XL,XM,XP
M39016/21-041L,M,P	JMSCDD-5XLS,XMS,XPS
M39016/21-042L,M,P	JMSCDD-6XLS,XMS,XPS
M39016/21-043L,M,P	JMSCDD-9XLS,XMS,XPS
M39016/21-044L,M,P	JMSCDD-12XLS,XMS,XPS
M39016/21-045L,M,P	JMSCDD-18XLS,XMS,XPS
M39016/21-046L,M,P	JMSCDD-26XLS,XMS,XPS
M39016/21-047L,M,P	JMSCDD-36XLS,XMS,XPS
M39016/21-048L,M,P	JMSCDD-48XLS,XMS,XPS

MIL-PRF-39016/22

Military Part Number	CII Part Number
M39016/22-004L,M,P	HMB1130K01L,M,P
M39016/22-005L,M,P	HMB1230K01L,M,P
M39016/22-007L,M,P	HMB1131K01L,M,P
M39016/22-009L,M,P	HMB1201K01L,M,P
M39016/22-011L,M,P	HMB1130G01L,M,P
M39016/22-012L,M,P	HMB1230G01L,M,P
M39016/22-014L,M,P	HMB1131G01L,M,P
M39016/22-016L,M,P	HMB1201G01L,M,P
M39016/22-018L,M,P	HMB1130F01L,M,P
M39016/22-019L,M,P	HMB1230F01L,M,P
M39016/22-020L,M,P	HMB1330F01L,M,P
M39016/22-021L,M,P	HMB1131F01L,M,P
M39016/22-023L,M,P	HMB1201F01L,M,P

MIL-PRF-39016/23

Military Part Number	CII Part Number
M39016/23-013L,M,P	J1MAWD-5XL,XM,XP
M39016/23-014L,M,P	J1MAWD-6XL,XM,XP

MIL-PRF-39016/23 (continued)

Military Part Number	CII Part Number
M39016/23-015L,M,P	J1MAWD-9XL,XM,XP
M39016/23-016L,M,P	J1MAWD-12XL,XM,XP
M39016/23-017L,M,P	J1MAWD-18XL,XM,XP
M39016/23-018L,M,P	J1MAWD-26XL,XM,XP
M39016/23-019L,M,P	J1MAPD-5XL,XM,XP
M39016/23-020L,M,P	J1MAPD-6XL,XM,XP
M39016/23-021L,M,P	J1MAPD-9XL,XM,XP
M39016/23-022L,M,P	J1MAPD-12XL,XM,XP
M39016/23-023L,M,P	J1MAPD-18XL,XM,XP
M39016/23-024L,M,P	J1MAPD-26XL,XM,XP
M39016/23-025L,M,P	J1MACD-5XL,XM,XP
M39016/23-026L,M,P	J1MACD-6XL,XM,XP
M39016/23-027L,M,P	J1MACD-9XL,XM,XP
M39016/23-028L,M,P	J1MACD-12XL,XM,XP
M39016/23-029L,M,P	J1MACD-18XL,XM,XP
M39016/23-030L,M,P	J1MACD-26XL,XM,XP
M39016/23-031L,M,P	J1MACD-5XLS,XMS,XPS
M39016/23-032L,M,P	J1MACD-6XLS,XMS,XPS
M39016/23-033L,M,P	J1MACD-9XLS,XMS,XPS
M39016/23-034L,M,P	J1MACD-12XLS,XMS,XPS
M39016/23-035L,M,P	J1MACD-18XLS,XMS,XPS
M39016/23-036L,M,P	J1MACD-26XLS,XMS,XPS

MIL-PRF-39016/24

Military Part Number	CII Part Number
M39016/24-013L,M,P	J1MAWDD-5XL,XM,XP
M39016/24-014L,M,P	J1MAWDD-6XL,XM,XP
M39016/24-015L,M,P	J1MAWDD-9XL,XM,XP
M39016/24-016L,M,P	J1MAWDD-12XL,XM,XP
M39016/24-017L,M,P	J1MAWDD-18XL,XM,XP
M39016/24-018L,M,P	J1MAWDD-26XL,XM,XP
M39016/24-019L,M,P	J1MAPDD-5XL,XM,XP
M39016/24-020L,M,P	J1MAPDD-6XL,XM,XP
M39016/24-021L,M,P	J1MAPDD-9XL,XM,XP
M39016/24-022L,M,P	J1MAPDD-12XL,XM,XP
M39016/24-023L,M,P	J1MAPDD-18XL,XM,XP
M39016/24-024L,M,P	J1MAPDD-26XL,XM,XP
M39016/24-025L,M,P	J1MACDD-5XL,XM,XP
M39016/24-026L,M,P	J1MACDD-6XL,XM,XP
M39016/24-027L,M,P	J1MACDD-9XL,XM,XP
M39016/24-028L,M,P	J1MACDD-12XL,XM,XP
M39016/24-029L,M,P	J1MACDD-18XL,XM,XP
M39016/24-030L,M,P	J1MACDD-26XL,XM,XP
M39016/24-031L,M,P	J1MACDD-5XLS,XMS,XPS
M39016/24-032L,M,P	J1MACDD-6XLS,XMS,XPS
M39016/24-033L,M,P	J1MACDD-9XLS,XMS,XPS
M39016/24-034L,M,P	J1MACDD-12XLS,XMS,XPS
M39016/24-035L,M,P	J1MACDD-18XLS,XMS,XPS
M39016/24-036L,M,P	J1MACDD-26XLS,XMS,XPS

MIL-PRF-39016/25

Military Part Number	CII Part Number
M39016/25-017L,M,P	J1MSWD-5XL,XM,XP
M39016/25-018L,M,P	J1MSWD-6XL,XM,XP
M39016/25-019L,M,P	J1MSWD-12XL,XM,XP
M39016/25-020L,M,P	J1MSWD-26XL,XM,XP
M39016/25-021L,M,P	J1MSWD-32XL,XM,XP
M39016/25-022L,M,P	J1MSWD-40XL,XM,XP
M39016/25-023L,M,P	J1MSWD-9XL,XM,XP
M39016/25-024L,M,P	J1MSWD-18XL,XM,XP
M39016/25-025L,M,P	J1MSPD-5XL,XM,XP

Catalog 5-1773450-5
Revised 3-13

www.te.com

Dimensions are shown for reference purposes only. Specifications subject to change.

Dimensions are in millimeters unless otherwise specified.

USA: +1 800 522 6752
Asia Pacific: +86 0 400 820 6015
UK: +44 800 267 666

For additional support numbers please visit www.te.com

CII Electromechanical Relays (Continued)

MIL-PRF-39016/25 (continued)

Military Part Number	CII Part Number
M39016/25-026L,M,P	J1MSPD-6XL,XM,XP
M39016/25-027L,M,P	J1MSPD-12XL,XM,XP
M39016/25-028L,M,P	J1MSPD-26XL,XM,XP
M39016/25-029L,M,P	J1MSPD-32XL,XM,XP
M39016/25-030L,M,P	J1MSPD-40XL,XM,XP
M39016/25-031L,M,P	J1MSPD-9XL,XM,XP
M39016/25-032L,M,P	J1MSPD-18XL,XM,XP
M39016/25-033L,M,P	J1MSCD-5XL,XM,XP
M39016/25-034L,M,P	J1MSCD-6XL,XM,XP
M39016/25-035L,M,P	J1MSCD-12XL,XM,XP
M39016/25-036L,M,P	J1MSCD-26XL,XM,XP
M39016/25-037L,M,P	J1MSCD-32XL,XM,XP
M39016/25-038L,M,P	J1MSCD-40XL,XM,XP
M39016/25-039L,M,P	J1MSCD-9XL,XM,XP
M39016/25-040L,M,P	J1MSCD-18XL,XM,XP
M39016/25-041L,M,P	J1MSCD-5XLS,XMS,XPS
M39016/25-042L,M,P	J1MSCD-6XLS,XMS,XPS
M39016/25-043L,M,P	J1MSCD-12XLS,XMS,XPS
M39016/25-044L,M,P	J1MSCD-26XLS,XMS,XPS
M39016/25-045L,M,P	J1MSCD-32XLS,XMS,XPS
M39016/25-046L,M,P	J1MSCD-40XLS,XMS,XPS
M39016/25-047L,M,P	J1MSCD-9XLS,XMS,XPS
M39016/25-048L,M,P	J1MSCD-18XLS,XMS,XPS

MIL-PRF-39016/26

Military Part Number	CII Part Number
M39016/26-017L,M,P	J1MSWDD-5XL,XM,XP
M39016/26-018L,M,P	J1MSWDD-6XL,XM,XP
M39016/26-019L,M,P	J1MSWDD-12XL,XM,XP
M39016/26-020L,M,P	J1MSWDD-26XL,XM,XP
M39016/26-021L,M,P	J1MSWDD-32XL,XM,XP
M39016/26-022L,M,P	J1MSWDD-40XL,XM,XP
M39016/26-023L,M,P	J1MSWDD-9XL,XM,XP
M39016/26-024L,M,P	J1MSWDD-18XL,XM,XP
M39016/26-025L,M,P	J1MSPDD-5XL,XM,XP
M39016/26-026L,M,P	J1MSPDD-6XL,XM,XP
M39016/26-027L,M,P	J1MSPDD-12XL,XM,XP
M39016/26-028L,M,P	J1MSPDD-26XL,XM,XP
M39016/26-029L,M,P	J1MSPDD-32XL,XM,XP
M39016/26-030L,M,P	J1MSPDD-40XL,XM,XP
M39016/26-031L,M,P	J1MSPDD-9XL,XM,XP
M39016/26-032L,M,P	J1MSPDD-18XL,XM,XP
M39016/26-033L,M,P	J1MSCDD-5XL,XM,XP
M39016/26-034L,M,P	J1MSCDD-6XL,XM,XP
M39016/26-035L,M,P	J1MSCDD-12XL,XM,XP
M39016/26-036L,M,P	J1MSCDD-26XL,XM,XP
M39016/26-037L,M,P	J1MSCDD-32XL,XM,XP
M39016/26-038L,M,P	J1MSCDD-40XL,XM,XP
M39016/26-039L,M,P	J1MSCDD-9XL,XM,XP
M39016/26-040L,M,P	J1MSCDD-18XL,XM,XP
M39016/26-041L,M,P	J1MSCDD-5XLS,XMS,XPS
M39016/26-042L,M,P	J1MSCDD-6XLS,XMS,XPS
M39016/26-043L,M,P	J1MSCDD-12XLS,XMS,XPS
M39016/26-044L,M,P	J1MSCDD-26XLS,XMS,XPS
M39016/26-045L,M,P	J1MSCDD-32XLS,XMS,XPS
M39016/26-046L,M,P	J1MSCDD-40XLS,XMS,XPS
M39016/26-047L,M,P	J1MSCDD-9XLS,XMS,XPS
M39016/26-048L,M,P	J1MSCDD-18XLS,XMS,XPS

MIL-PRF-39016/31

Military Part Number	CII Part Number
M39016/31-001L	3SBM1063A2
M39016/31-001M	3SBM1069A2
M39016/31-002L	3SBM1064A2
M39016/31-002M	3SBM1070A2
M39016/31-003L	3SBM1065A2
M39016/31-003M	3SBM1071A2
M39016/31-004L	3SBM1066A2
M39016/31-004M	3SBM1072A2
M39016/31-005L	3SBM1067A2
M39016/31-005M	3SBM1073A2
M39016/31-006L	3SBM1068A2
M39016/31-006M	3SBM1074A2

MIL-PRF-39016/32

Military Part Number	CII Part Number
M39016/32-001	3SAM1819A2
M39016/32-002	3SAM1820A2
M39016/32-003	3SAM1821A2
M39016/32-004	3SAM1822A2
M39016/32-005	3SAM1823A2
M39016/32-006	3SAM1824A2
M39016/32-007	3SAM1825A2
M39016/32-008	3SAM1826A2
M39016/32-009	3SAM1827A2
M39016/32-010	3SAM1828A2
M39016/32-011	3SAM1829A2
M39016/32-012	3SAM1830A2
M39016/32-013	3SAM1831A2
M39016/32-014	3SAM1832A2
M39016/32-015	3SAM1833A2
M39016/32-016	3SAM1834A2
M39016/32-017	3SAM1835A2
M39016/32-018	3SAM1836A2
M39016/32-019	3SAM1840A2
M39016/32-020	3SAM1841A2
M39016/32-021	3SAM1842A2
M39016/32-022	3SAM1865A2

MIL-PRF-39016/34

Military Part Number	CII Part Number
M39016/34-001	MFW1305S05
M39016/34-002	MFW1201S06
M39016/34-004	MFW1305S06
M39016/34-005	MFW1201S07
M39016/34-007	MFW1305N03
M39016/34-008	MFW1201N03
M39016/34-010	MFW1201S08
M39016/34-011	MFW1201S09
M39016/34-012	MFW1201N04
M39016/34-013	MFW1202S01
M39016/34-014	MFW1202S02
M39016/34-015	MFW1202N01

MIL-PRF-39016/35

Military Part Number	CII Part Number
M39016/35-001L	3SBM1101A2
M39016/35-001M	3SBM1107A2
M39016/35-002L	3SBM1102A2
M39016/35-002M	3SBM1108A2
M39016/35-003L	3SBM1103A2
M39016/35-003M	3SBM1109A2

Catalog 5-1773450-5
Revised 3-13

www.te.com

Dimensions are shown for reference purposes only. Specifications subject to change.

Dimensions are in millimeters unless otherwise specified.

USA: +1 800 522 6752
Asia Pacific: +86 0 400 820 6015
UK: +44 800 267 666

For additional support numbers please visit www.te.com

CII Electromechanical Relays (Continued)

MIL-PRF-39016/35 (continued)

Military Part Number	CII Part Number
M39016/35-004L	3SBM1104A2
M39016/35-004M	3SBM1110A2
M39016/35-005L	3SBM1105A2
M39016/35-005M	3SBM1111A2
M39016/35-006L	3SBM1106A2
M39016/35-006M	3SBM1112A2

MIL-PRF-39016/36

Military Part Number	CII Part Number
M39016/36-001L	3SBM1078A2
M39016/36-001M	3SBM1084A2
M39016/36-002L	3SBM1079A2
M39016/36-002M	3SMB1085A2
M39016/36-003L	3SBM1080A2
M39016/36-003M	3SBM1086A2
M39016/36-004L	3SBM1081A2
M39016/36-004M	3SBM1087A2
M39016/36-005L	3SBM1082A2
M39016/36-005M	3SBM1088A2
M39016/36-006L	3SBM1083A2
M39016/36-006M	3SBM1089A2

MIL-PRF-39016/37

Military Part Number	CII Part Number
M39016/37-001L	3SBC1601A2
M39016/37-001M	3SBC1628A2
M39016/37-001P	3SBC2071A2
M39016/37-002L	3SBC1602A2
M39016/37-002M	3SBC1629A2
M39016/37-002P	3SBC2072A2
M39016/37-003L	3SBC1603A2
M39016/37-003M	3SBC1630A2
M39016/37-003P	3SBC2073A2
M39016/37-004L	3SBC1604A2
M39016/37-004M	3SBC1631A2
M39016/37-004P	3SBC2074A2
M39016/37-005L	3SBC1605A2
M39016/37-005M	3SBC1632A2
M39016/37-005P	3SBC2075A2
M39016/37-006L	3SBC1606A2
M39016/37-006M	3SBC1633A2
M39016/37-006P	3SBC2076A2
M39016/37-007L	3SBC1607A2
M39016/37-007M	3SBC1634A2
M39016/37-007P	3SBC2077A2
M39016/37-008L	3SBC1608A2
M39016/37-008M	3SBC1635A2
M39016/37-008P	3SBC2078A2
M39016/37-009L	3SBC1609A2
M39016/37-009M	3SBC1636A2
M39016/37-009P	3SBC2079A2
M39016/37-010L	3SBC1610A2
M39016/37-010M	3SBC1637A2
M39016/37-010P	3SBC2080A2
M39016/37-011L	3SBC1611A2
M39016/37-011M	3SBC1638A2
M39016/37-011P	3SBC2081A2
M39016/37-012L	3SBC1612A2
M39016/37-012M	3SBC1639A2
M39016/37-012P	3SBC2082A2
M39016/37-013L	3SBC1613A2

MIL-PRF-39016/37 (continued)

Military Part Number	CII Part Number
M39016/37-013M	3SBC1640A2
M39016/37-013P	3SBC2083A2
M39016/37-014L	3SBC1614A2
M39016/37-014M	3SBC1641A2
M39016/37-014P	3SBC2084A2
M39016/37-015L	3SBC1615A2
M39016/37-015M	3SBC1642A2
M39016/37-015P	3SBC2085A2
M39016/37-016L	3SBC1616A2
M39016/37-016M	3SBC1643A2
M39016/37-016P	3SBC2086A2
M39016/37-017L	3SBC1617A2
M39016/37-017M	3SBC1644A2
M39016/37-017P	3SBC2087A2
M39016/37-018L	3SBC1618A2
M39016/37-018M	3SBC1645A2
M39016/37-018P	3SBC2088A2
M39016/37-019L	3SBC1619A2
M39016/37-019M	3SBC1646A2
M39016/37-019P	3SBC2089A2
M39016/37-020L	3SBC1620A2
M39016/37-020M	3SBC1647A2
M39016/37-020P	3SBC2090A2
M39016/37-021L	3SBC1621A2
M39016/37-021M	3SBC1648A2
M39016/37-021P	3SBC2091A2
M39016/37-022L	3SBC1622A2
M39016/37-022M	3SBC1649A2
M39016/37-022P	3SBC2092A2
M39016/37-023L	3SBC1623A2
M39016/37-023M	3SBC1650A2
M39016/37-023P	3SBC2093A2
M39016/37-024L	3SBC1624A2
M39016/37-024M	3SBC1651A2
M39016/37-024P	3SBC2094A2
M39016/37-025L	3SBC1625A2
M39016/37-025M	3SBC1652A2
M39016/37-025P	3SBC2095A2
M39016/37-026L	3SBC1626A2
M39016/37-026M	3SBC1653A2
M39016/37-026P	3SBC2096A2
M39016/37-027L	3SBC1627A2
M39016/37-027M	3SBC1654A2
M39016/37-027P	3SBC2097A2

MIL-PRF-39016/38

Military Part Number	CII Part Number
M39016/38-001L	3SBC1661A2
M39016/38-001M	3SBC1701A2
M39016/38-001P	3SBC2101A2
M39016/38-002L	3SBC1662A2
M39016/38-002M	3SBC1702A2
M39016/38-002P	3SBC2102A2
M39016/38-003L	3SBC1663A2
M39016/38-003M	3SBC1703A2
M39016/38-003P	3SBC2103A2
M39016/38-004L	3SBC1664A2
M39016/38-004M	3SBC1704A2
M39016/38-004P	3SBC2104A2
M39016/38-005L	3SBC1665A2
M39016/38-005M	3SBC1705A2

Dimensions are shown for reference purposes only. Specifications subject to change.

Dimensions are in millimeters unless otherwise specified.

USA: +1 800 522 6752
Asia Pacific: +86 0 400 820 6015
UK: +44 800 267 666

For additional support numbers please visit www.te.com

CII Electromechanical Relays (Continued)

MIL-PRF-39016/38 (continued)

Military Part Number	CII Part Number
M39016/38-005P	3SBC2105A2
M39016/38-006L	3SBC1666A2
M39016/38-006M	3SBC1706A2
M39016/38-006P	3SBC2106A2
M39016/38-007L	3SBC1667A2
M39016/38-007M	3SBC1707A2
M39016/38-007P	3SBC2107A2
M39016/38-008L	3SBC1668A2
M39016/38-008M	3SBC1708A2
M39016/38-008P	3SBC2108A2
M39016/38-009L	3SBC1669A2
M39016/38-009M	3SBC1709A2
M39016/38-009P	3SBC2109A2
M39016/38-010L	3SBC1670A2
M39016/38-010M	3SBC1710A2
M39016/38-010P	3SBC2110A2
M39016/38-011L	3SBC1671A2
M39016/38-011M	3SBC1711A2
M39016/38-011P	3SBC2111A2
M39016/38-012L	3SBC1672A2
M39016/38-012M	3SBC1712A2
M39016/38-012P	3SBC2112A2
M39016/38-013L	3SBC1673A2
M39016/38-013M	3SBC1713A2
M39016/38-013P	3SBC2113A2
M39016/38-014L	3SBC1674A2
M39016/38-014M	3SBC1714A2
M39016/38-014P	3SBC2114A2
M39016/38-015L	3SBC1675A2
M39016/38-015M	3SBC1715A2
M39016/38-015P	3SBC2115A2
M39016/38-016L	3SBC1676A2
M39016/38-016M	3SBC1716A2
M39016/38-016P	3SBC2116A2
M39016/38-017L	3SBC1677A2
M39016/38-017M	3SBC1717A2
M39016/38-017P	3SBC2117A2
M39016/38-018L	3SBC1678A2
M39016/38-018M	3SBC1718A2
M39016/38-018P	3SBC2118A2
M39016/38-019L	3SBC1679A2
M39016/38-019M	3SBC1719A2
M39016/38-019P	3SBC2119A2
M39016/38-020L	3SBC1680A2
M39016/38-020M	3SBC1720A2
M39016/38-020P	3SBC2120A2
M39016/38-021L	3SBC1681A2
M39016/38-021M	3SBC1721A2
M39016/38-021P	3SBC2121A2
M39016/38-022L	3SBC1682A2
M39016/38-022M	3SBC1722A2
M39016/38-022P	3SBC2122A2
M39016/38-023L	3SBC1683A2
M39016/38-023M	3SBC1723A2
M39016/38-023P	3SBC2123A2
M39016/38-024L	3SBC1684A2
M39016/38-024M	3SBC1724A2
M39016/38-024P	3SBC2124A2
M39016/38-025L	3SBC1685A2
M39016/38-025M	3SBC1725A2
M39016/38-025P	3SBC2125A2

MIL-PRF-39016/38 (continued)

Military Part Number	CII Part Number
M39016/38-026L	3SBC1686A2
M39016/38-026M	3SBC1726A2
M39016/38-026P	3SBC2126A2
M39016/38-027L	3SBC1687A2
M39016/38-027M	3SBC1727A2
M39016/38-027P	3SBC2127A2

MIL-PRF-39016/40

Military Part Number	CII Part Number
M39016/40-001	SR-7601
M39016/40-002	SR-7602
M39016/40-003	SR-7603
M39016/40-004	SR-7604
M39016/40-005	SR-7605
M39016/40-006	SR-7606
M39016/40-007	SR-7607
M39016/40-008	SR-7608
M39016/40-009	SR-7609
M39016/40-010	SR-7610
M39016/40-011	SR-7611
M39016/40-012	SR-7612
M39016/40-013	SR-7613
M39016/40-014	SR-7614
M39016/40-015	SR-7615
M39016/40-016	SR-7616
M39016/40-017	SR-7617
M39016/40-018	SR-7618
M39016/40-019	SR-7619
M39016/40-020	SR-7620
M39016/40-021	SR-7621
M39016/40-022	SR-7622
M39016/40-023	SR-7623
M39016/40-024	SR-7624
M39016/40-025	SR-7625
M39016/40-026	SR-7626
M39016/40-027	SR-7627
M39016/40-028	SR-7628
M39016/40-029	SR-7629
M39016/40-030	SR-7630

MIL-PRF-39016/41

Military Part Number	CII Part Number
M39016/41-033L,M,P	JMGSC-5L,M,P
M39016/41-034L,M,P	JMGSC-6L,M,P
M39016/41-035L,M,P	JMGSC-12L,M,P
M39016/41-036L,M,P	JMGSC-26L,M,P
M39016/41-037L,M,P	JMGSC-36L,M,P
M39016/41-038L,M,P	JMGSC-48L,M,P
M39016/41-039L,M,P	JMGSC-9L,M,P
M39016/41-040L,M,P	JMGSC-18L,M,P
M39016/41-041L,M,P	JMGSP-5L,M,P
M39016/41-042L,M,P	JMGSP-6L,M,P
M39016/41-043L,M,P	JMGSP-12L,M,P
M39016/41-044L,M,P	JMGSP-26L,M,P
M39016/41-045L,M,P	JMGSP-36L,M,P
M39016/41-046L,M,P	JMGSP-48L,M,P
M39016/41-047L,M,P	JMGSP-9L,M,P
M39016/41-048L,M,P	JMGSP-18L,M,P
M39016/41-049L,M,P	JMGSC-5LW,MW,PW
M39016/41-050L,M,P	JMGSC-6LW,MW,PW
M39016/41-051L,M,P	JMGSC-12LW,MW,PW

Catalog 5-1773450-5
Revised 3-13

www.te.com

Dimensions are shown for reference purposes only. Specifications subject to change.

Dimensions are in millimeters unless otherwise specified.

USA: +1 800 522 6752
Asia Pacific: +86 0 400 820 6015
UK: +44 800 267 666

For additional support numbers please visit www.te.com

CII Electromechanical Relays (Continued)

MIL-PRF-39016/41 (continued)

Military Part Number	CII Part Number
M39016/41-052L,M,P	JMGSC-26LW,MW,PW
M39016/41-053L,M,P	JMGSC-36LW,MW,PW
M39016/41-054L,M,P	JMGSC-48LW,MW,PW
M39016/41-055L,M,P	JMGSC-9LW,MW,PW
M39016/41-056L,M,P	JMGSC-18LW,MW,PW
M39016/41-057L,M,P	JMGSCG-5L,M,P
M39016/41-058L,M,P	JMGSCG-6L,M,P
M39016/41-059L,M,P	JMGSCG-12L,M,P
M39016/41-060L,M,P	JMGSCG-26L,M,P
M39016/41-061L,M,P	JMGSCG-36L,M,P
M39016/41-062L,M,P	JMGSCG-48L,M,P
M39016/41-063L,M,P	JMGSCG-9L,M,P
M39016/41-064L,M,P	JMGSCG-18L,M,P
M39016/41-065L,M,P	JMGSCG-5LW,MW,PW
M39016/41-066L,M,P	JMGSCG-6LW,MW,PW
M39016/41-067L,M,P	JMGSCG-12LW,MW,PW
M39016/41-068L,M,P	JMGSCG-26LW,MW,PW
M39016/41-069L,M,P	JMGSCG-36LW,MW,PW
M39016/41-070L,M,P	JMGSCG-48LW,MW,PW
M39016/41-071L,M,P	JMGSCG-9LW,MW,PW
M39016/41-072L,M,P	JMGSCG-18LW,MW,PW

MIL-PRF-39016/42

Military Part Number	CII Part Number
M39016/42-033L,M,P	JMGSCD-5L,M,P
M39016/42-034L,M,P	JMGSCD-6L,M,P
M39016/42-035L,M,P	JMGSCD-12L,M,P
M39016/42-036L,M,P	JMGSCD-26L,M,P
M39016/42-037L,M,P	JMGSCD-36L,M,P
M39016/42-038L,M,P	JMGSCD-48L,M,P
M39016/42-039L,M,P	JMGSCD-9L,M,P
M39016/42-040L,M,P	JMGSCD-18L,M,P
M39016/42-041L,M,P	JMGSPD-5L,M,P
M39016/42-042L,M,P	JMGSPD-6L,M,P
M39016/42-043L,M,P	JMGSPD-12L,M,P
M39016/42-044L,M,P	JMGSPD-26L,M,P
M39016/42-045L,M,P	JMGSPD-36L,M,P
M39016/42-046L,M,P	JMGSPD-48L,M,P
M39016/42-047L,M,P	JMGSPD-9L,M,P
M39016/42-048L,M,P	JMGSPD-18L,M,P
M39016/42-049L,M,P	JMGSCD-5LW,MW,
M39016/42-050L,M,P	JMGSCD-6LW,MW,PW
M39016/42-051L,M,P	JMGSCD-12LW,MW,PW
M39016/42-052L,M,P	JMGSCD-26LW,MW,PW
M39016/42-053L,M,P	JMGSCD-36LW,MW,PW
M39016/42-054L,M,P	JMGSCD-48LW,MW,PW
M39016/42-055L,M,P	JMGSCD-9LW,MW,PW
M39016/42-056L,M,P	JMGSCD-18LW,MW,PW
M39016/42-057L,M,P	JMGSCDG-5L,M,P
M39016/42-058L,M,P	JMGSCDG-6L,M,P
M39016/42-059L,M,P	JMGSCDG-12L,M,P
M39016/42-060L,M,P	JMGSCDG-26L,M,P
M39016/42-061L,M,P	JMGSCDG-36L,M,P
M39016/42-062L,M,P	JMGSCDG-48L,M,P
M39016/42-063L,M,P	JMGSCDG-9L,M,P
M39016/42-064L,M,P	JMGSCDG-18L,M,P
M39016/42-065L,M,P	JMGSCDG-5LW,MW,PW
M39016/42-066L,M,P	JMGSCDG-6LW,MW,PW
M39016/42-067L,M,P	JMGSCDG-12LW,MW,PW
M39016/42-068L,M,P	JMGSCDG-26LW,MW,PW
M39016/42-069L,M,P	JMGSCDG-36LW,MW,PW

MIL-PRF-39016/42 (continued)

Military Part Number	CII Part Number
M39016/42-070L,M,P	JMGSCDG-48LW,MW,PW
M39016/42-071L,M,P	JMGSCDG-9LW,MW,PW
M39016/42-072L,M,P	JMGSCDG-18LW,MW,PW

MIL-PRF-39016/43

Military Part Number	CII Part Number
M39016/43-033L,M,P	JMGSCDD-5L,M,P
M39016/43-034L,M,P	JMGSCDD-6L,M,P
M39016/43-035L,M,P	JMGSCDD-9L,M,P
M39016/43-036L,M,P	JMGSCDD-12L,M,P
M39016/43-037L,M,P	JMGSCDD-18L,M,P
M39016/43-038L,M,P	JMGSCDD-26L,M,P
M39016/43-039L,M,P	JMGSCDD-36L,M,P
M39016/43-040L,M,P	JMGSCDD-48L,M,P
M39016/43-041L,M,P	JMGSPDD-5L,M,P
M39016/43-042L,M,P	JMGSPDD-6L,M,P
M39016/43-043L,M,P	JMGSPDD-9L,M,P
M39016/43-044L,M,P	JMGSPDD-12L,M,P
M39016/43-045L,M,P	JMGSPDD-18L,M,P
M39016/43-046L,M,P	JMGSPDD-26L,M,P
M39016/43-047L,M,P	JMGSPDD-36L,M,P
M39016/43-048L,M,P	JMGSPDD-48L,M,P
M39016/43-049L,M,P	JMGSCDD-5LW,MW,PW
M39016/43-050L,M,P	JMGSCDD-6LW,MW,PW
M39016/43-051L,M,P	JMGSCDD-9LW,MW,PW
M39016/43-052L,M,P	JMGSCDD-12LW,MW,PW
M39016/43-053L,M,P	JMGSCDD-18LW,MW,PW
M39016/43-054L,M,P	JMGSCDD-26LW,MW,PW
M39016/43-055L,M,P	JMGSCDD-36LW,MW,PW
M39016/43-056L,M,P	JMGSCDD-48LW,MW,PW
M39016/43-057L,M,P	JMGSCDDG-5L,M,P
M39016/43-058L,M,P	JMGSCDDG-6L,M,P
M39016/43-059L,M,P	JMGSCDDG-9L,M,P
M39016/43-060L,M,P	JMGSCDDG-12L,M,P
M39016/43-061L,M,P	JMGSCDDG-18L,M,P
M39016/43-062L,M,P	JMGSCDDG-26L,M,P
M39016/43-063L,M,P	JMGSCDDG-36L,M,P
M39016/43-064L,M,P	JMGSCDDG-48L,M,P
M39016/43-065L,M,P	JMGSCDDG-5LW,MW,PW
M39016/43-066L,M,P	JMGSCDDG-6LW,MW,PW
M39016/43-067L,M,P	JMGSCDDG-9LW,MW,PW
M39016/43-068L,M,P	JMGSCDDG-12LW,MW,PW
M39016/43-069L,M,P	JMGSCDDG-18LW,MW,PW
M39016/43-070L,M,P	JMGSCDDG-26LW,MW,PW
M39016/43-071L,M,P	JMGSCDDG-36LW,MW,PW
M39016/43-072L,M,P	JMGSCDDG-48LW,MW,PW

MIL-PRF-39016/44

Military Part Number	CII Part Number
M39016/44-001L,M,P	HMS1130S01L,M,P
M39016/44-002L,M,P	HMS1230S01L,M,P
M39016/44-004L,M,P	HMS1131S01L,M,P
M39016/44-005L,M,P	HMS1231S01L,M,P
M39016/44-007L,M,P	HMS1101S01L,M,P
M39016/44-008L,M,P	HMS1201S108L,M,P
M39016/44-010L,M,P	HMS1130S02L,M,P
M39016/44-011L,M,P	HMS1230S02L,M,P
M39016/44-013L,M,P	HMS1131S02L,M,P
M39016/44-014L,M,P	HMS1231S02L,M,P
M39016/44-016L,M,P	HMS1101S02L,M,P
M39016/44-017L,M,P	HMS1201S109L,M,P

Catalog 5-1773450-5
Revised 3-13

www.te.com

Dimensions are shown for reference purposes only. Specifications subject to change.

Dimensions are in millimeters unless otherwise specified.

USA: +1 800 522 6752
Asia Pacific: +86 0 400 820 6015
UK: +44 800 267 666

For additional support numbers please visit www.te.com

CII Electromechanical Relays (Continued)

MIL-PRF-39016/44 (continued)

Military Part Number	CII Part Number
M39016/44-019L,M,P	HMS1130S03L,M,P
M39016/44-020L,M,P	HMS1230S03L,M,P
M39016/44-022L,M,P	HMS1131S03L,M,P
M39016/44-023L,M,P	HMS1231S03L,M,P
M39016/44-025L,M,P	HMS1101S03L,M,P
M39016/44-026L,M,P	HMS1201S110L,M,P
M39016/44-028L,M,P	HMS1130S04L,M,P
M39016/44-029L,M,P	HMS1230S04L,M,P
M39016/44-031L,M,P	HMS1131S04L,M,P
M39016/44-032L,M,P	HMS1231S04L,M,P
M39016/44-034L,M,P	HMS1101S04L,M,P
M39016/44-035L,M,P	HMS1201S111L,M,P
M39016/44-037L,M,P	HMS1130S05L,M,P
M39016/44-038L,M,P	HMS1230S05L,M,P
M39016/44-040L,M,P	HMS1131S05L,M,P
M39016/44-041L,M,P	HMS1231S05L,M,P
M39016/44-043L,M,P	HMS1101S05L,M,P
M39016/44-044L,M,P	HMS1201S112L,M,P
M39016/44-046L,M,P	HMS1130S07L,M,P
M39016/44-047L,M,P	HMS1230S06L,M,P
M39016/44-049L,M,P	HMS1131S06L,M,P
M39016/44-050L,M,P	HMS1231S06L,M,P
M39016/44-052L,M,P	HMS1101S07L,M,P
M39016/44-053L,M,P	HMS1201S118L,M,P

MIL-PRF-39016/53

Military Part Number	CII Part Number
M39016/53-001L	3SBH1190A2
M39016/53-001M	3SBH1220A2
M39016/53-002L	3SBH1191A2
M39016/53-002M	3SBH1221A2
M39016/53-003L	3SBH1192A2
M39016/53-003M	3SBH1222A2
M39016/53-004L	3SBH1193A2
M39016/53-004M	3SBH1223A2
M39016/53-005L	3SBH1194A2
M39016/53-005M	3SBH1224A2
M39016/53-006L	3SBH1195A2
M39016/53-006M	3SBH1225A2
M39016/53-007L	3SBH1196A2
M39016/53-007M	3SBH1226A2
M39016/53-008L	3SBH1197A2
M39016/53-008M	3SBH1227A2
M39016/53-009L	3SBH1198A2
M39016/53-009M	3SBH1228A2
M39016/53-010L	3SBH1199A2
M39016/53-010M	3SBH1229A2
M39016/53-011L	3SBH1200A2
M39016/53-011M	3SBH1230A2
M39016/53-012L	3SBH1201A2
M39016/53-012M	3SBH1231A2
M39016/53-013L	3SBH1202A2
M39016/53-013M	3SBH1232A2
M39016/53-014L	3SBH1203A2
M39016/53-014M	3SBH1233A2
M39016/53-015L	3SBH1265A2
M39016/53-015M	3SBH1279A2
M39016/53-016L	3SBH1266A2
M39016/53-016M	3SBH1280A2
M39016/53-017L	3SBH1267A2
M39016/53-017M	3SBH1281A2

MIL-PRF-39016/53 (continued)

Military Part Number	CII Part Number
M39016/53-018L	3SBH1268A2
M39016/53-018M	3SBH1282A2
M39016/53-019L	3SBH1269A2
M39016/53-019M	3SBH1283A2
M39016/53-020L	3SBH1270A2
M39016/53-020M	3SBH1284A2
M39016/53-021L	3SBH1271A2
M39016/53-021M	3SBH1285A2
M39016/53-022L	3SBH1272A2
M39016/53-022M	3SBH1286A2
M39016/53-023L	3SBH1273A2
M39016/53-023M	3SBH1287A2
M39016/53-024L	3SBH1274A2
M39016/53-024M	3SBH1288A2
M39016/53-025L	3SBH1275A2
M39016/53-025M	3SBH1289A2
M39016/53-026L	3SBH1276A2
M39016/53-026M	3SBH1290A2
M39016/53-027L	3SBH1277A2
M39016/53-027M	3SBH1291A2
M39016/53-028L	3SBH1278A2
M39016/53-028M	3SBH1292A2

MIL-PRF-39016/54

Military Part Number	CII Part Number
M39016/54-001L	3SBH1234A2
M39016/54-001M	3SBH1251A2
M39016/54-002L	3SBH1235A2
M39016/54-002M	3SBH1252A2
M39016/54-003L	3SBH1236A2
M39016/54-003M	3SBH1253A2
M39016/54-004L	3SBH1237A2
M39016/54-004M	3SBH1254A2
M39016/54-005L	3SBH1238A2
M39016/54-005M	3SBH1255A2
M39016/54-006L	3SBH1239A2
M39016/54-006M	3SBH1256A2
M39016/54-007L	3SBH1240A2
M39016/54-007M	3SBH1257A2
M39016/54-008L	3SBH1241A2
M39016/54-008M	3SBH1258A2
M39016/54-009L	3SBH1242A2
M39016/54-009M	3SBH1259A2
M39016/54-010L	3SBH1243A2
M39016/54-010M	3SBH1260A2
M39016/54-011L	3SBH1244A2
M39016/54-011M	3SBH1261A2
M39016/54-012L	3SBH1245A2
M39016/54-012M	3SBH1262A2
M39016/54-013L	3SBH1246A2
M39016/54-013M	3SBH1263A2
M39016/54-014L	3SBH1247A2
M39016/54-014M	3SBH1264A2
M39016/54-015L	3SBH1293A2
M39016/54-015M	3SBH1307A2
M39016/54-016L	3SBH1294A2
M39016/54-016M	3SBH1308A2
M39016/54-017L	3SBH1295A2
M39016/54-017M	3SBH1309A2
M39016/54-018L	3SBH1296A2
M39016/54-018M	3SBH1310A2

Catalog 5-1773450-5
Revised 3-13

www.te.com

Dimensions are shown for reference purposes only. Specifications subject to change.

Dimensions are in millimeters unless otherwise specified.

USA: +1 800 522 6752
Asia Pacific: +86 0 400 820 6015
UK: +44 800 267 666

For additional support numbers please visit www.te.com

CII Electromechanical Relays (Continued)

MIL-PRF-39016/54 (continued)

Military Part Number	CII Part Number
M39016/54-019L	3SBH1297A2
M39016/54-019M	3SBH1311A2
M39016/54-020L	3SBH1298A2
M39016/54-020M	3SBH1312A2
M39016/54-021L	3SBH1299A2
M39016/54-021M	3SBH1313A2
M39016/54-022L	3SBH1300A2
M39016/54-022M	3SBH1314A2
M39016/54-023L	3SBH1301A2
M39016/54-023M	3SBH1315A2
M39016/54-024L	3SBH1302A2
M39016/54-024M	3SBH1316A2
M39016/54-025L	3SBH1303A2
M39016/54-025M	3SBH1317A2
M39016/54-026L	3SBH1304A2
M39016/54-026M	3SBH1318A2
M39016/54-027L	3SBH1305A2
M39016/54-027M	3SBH1319A2
M39016/54-028L	3SBH1306A2
M39016/54-028M	3SBH1320A2

MIL-R-5757/1

Military Part Number	CII Part Number
M5757/1-021	RD6CAH2600
M5757/1-026	RD6CA2600

MIL-R-5757/7

Military Part Number	CII Part Number
M5757/7-003	RD4CB2600

MIL-R-5757/8

Military Part Number	CII Part Number
M5757/8-002	02A312HC2-0030

MIL-R-5757/10

Military Part Number	CII Part Number
M5757/10-015	FW1167G03
M5757/10-016	FW1367G04
M5757/10-022	FW1206G03
M5757/10-035	FW1109G06
M5757/10-036	FW1309G01
M5757/10-037	FW1167G06
M5757/10-038	FW1367G01
M5757/10-039	FW1120G01
M5757/10-040	FW1220G06
M5757/10-043	FW1106G06
M5757/10-044	FW1206G01
M5757/10-052	FW1101G03
M5757/10-053	FW1301G02
M5757/10-054	FW1201G03
M5757/10-056	FW1210G03
M5757/10-059	FW1201S07
M5757/10-060	FW1201D02

MIL-R-5757/13

Military Part Number	CII Part Number
M5757/13-083	3SAT1300A2
M5757/13-084	3SAT1301A2
M5757/13-085	3SAT1302A2
M5757/13-086	3SAT1303A2
M5757/13-087	3SAT1304A2

MIL-R-5757/13 (continued)

Military Part Number	CII Part Number
M5757/13-088	3SAT1305A2
M5757/13-089	3SAT1306A2
M5757/13-090	3SAT1307A2
M5757/13-091	3SAT1308A2
M5757/13-092	3SAT1309A2
M5757/13-093	3SAT1310A2
M5757/13-094	3SAT1311A2
M5757/13-095	3SAT1312A2
M5757/13-096	3SAT1313A2
M5757/13-097	3SAT1314A2
M5757/13-098	3SAT1315A2
M5757/13-099	3SAT1316A2
M5757/13-100	3SAT1317A2
M5757/13-101	3SAT1318A2
M5757/13-102	3SAT1319A2
M5757/13-103	3SAT1320A2
M5757/13-104	3SAT1321A2
M5757/13-105	3SAT1322A2
M5757/13-106	3SAT1323A2
M5757/13-107	3SAT1324A2
M5757/13-108	3SAT1325A2
M5757/13-109	3SAT1326A2
M5757/13-110	3SAT1327A2
M5757/13-111	3SAT1328A2
M5757/13-112	3SAT1329A2
M5757/13-113	3SAT1330A2
M5757/13-114	3SAT1331A2
M5757/13-115	3SAT1332A2
M5757/13-116	3SAT1333A2
M5757/13-117	3SAT1334A2
M5757/13-118	3SAT1335A2
M5757/13-119	3SAT1336A2
M5757/13-120	3SAT1337A2
M5757/13-121	3SAT1338A2
M5757/13-122	3SAT1339A2
M5757/13-123	3SAT1340A2
M5757/13-124	3SAT1341A2
M5757/13-125	3SAT1342A2
M5757/13-126	3SAT1343A2
M5757/13-127	3SAT1344A2
M5757/13-128	3SAT1345A2
M5757/13-129	3SAT1346A2
M5757/13-130	3SAT1347A2
M5757/13-131	3SAT1348A2
M5757/13-132	3SAT1349A2
M5757/13-133	3SAT1350A2
M5757/13-134	3SAT1351A2
M5757/13-135	3SAT1352A2
M5757/13-136	3SAT1353A2
M5757/13-137	3SAT1354A2
M5757/13-138	3SAT1355A2
M5757/13-139	3SAT1356A2
M5757/13-140	3SAT1357A2
M5757/13-141	3SAT1358A2
M5757/13-142	3SAT1359A2
M5757/13-143	3SAT1360A2

MIL-R-5757/23

Military Part Number	CII Part Number
M5757/23-001	B07D692BZ2-0011
M5757/23-002	B07D992BZ2-0050

Catalog 5-1773450-5
Revised 3-13

www.te.com

Dimensions are shown for reference purposes only. Specifications subject to change.

Dimensions are in millimeters unless otherwise specified.

USA: +1 800 522 6752
Asia Pacific: +86 0 400 820 6015
UK: +44 800 267 666

For additional support numbers please visit www.te.com

CII Electromechanical Relays (Continued)

MIL-R-5757/23 (continued)

Military Part Number	CII Part Number
M5757/23-003	B07D634BC2-0051
M5757/23-004	B07D934BC2-0052
M5757/23-005	B07D034BC2-0053
M5757/23-006	B07D692BB2-0069
M5757/23-007	B07D992BB2-0117
M5757/23-008	B07D634BB2-0118
M5757/23-009	B07D934BB2-0119
M5757/23-010	B07D034BB2-0120
M5757/23-011	B07D692BA2-0121
M5757/23-012	B07D992BA2-0122
M5757/23-013	B07D634BA2-0123
M5757/23-014	B07D934BA2-0124
M5757/23-015	B07D034BA2-0125
M5757/23-016	B07D692BD2-0126
M5757/23-017	B07D992BD2-0127
M5757/23-018	B07D634BD2-0128
M5757/23-019	B07D934BD2-0129
M5757/23-020	B07D034BD2-0130
M5757/23-026	B07D692BE2-0131
M5757/23-027	B07D992BE2-0132
M5757/23-028	B07D634BE2-0133
M5757/23-029	B07D934BE2-0134
M5757/23-030	B07D034BE2-0135
M5757/23-031	B07D932BC2-0348
M5757/23-032	B07D932BB2-0349
M5757/23-033	B07D932BA2-0350
M5757/23-034	B07D932BD2-0351
M5757/23-036	B07D932BE2-0352
M5757/23-037	B07D632BZ2-0353
M5757/23-038	B07D932BZ2-0354
M5757/23-039	B07D634BZ2-0355
M5757/23-040	B07D934BZ2-0356
M5757/23-041	B07D034BZ2-0357
M5757/23-042	B07D932BZ2-0358

MS27245

Military Part Number	CII Part Number
MS27245-1	B07D112BC4-0007
MS27245-2	B07D919BC4-0054
MS27245-3	B07D112BC4-0203
MS27245-4	B07D919BC4-0204
MS27245-5	B07E932BC4-0262
MS27245-6	B07D932BC4-0263

MS27247

Military Part Number	CII Part Number
MS27247-1	B07D111BC4-0006
MS27247-2	B07D111BC4-0202
MS27247-4	B07D915BC4-0264
MS27247-5	B07E915BC4-0265

MIL-PRF-6106/19

Military Part Number	CII Part Number
M6106/19-003	FCA-125-3
M6106/19-004	FCA-125-4
M6106/19-005	FCA-125-5
M6106/19-006	FCA-125-6
M6106/19-007	FCA-125-7
M6106/19-008	FCA-125-8
M6106/19-009	FCA-125-9
M6106/19-010	FCA-125-10

MIL-PRF-6106/19 (continued)

Military Part Number	CII Part Number
M6106/19-011	FCA-125-11
M6106/19-012	FCA-125-12
M6106/19-013	FCA-125-13
M6106/19-014	FCA-125-14
M6106/19-015	FCA-125-15
M6106/19-016	FCA-125-16
M6106/19-017	FCA-125-17
M6106/19-018	FCA-125-18
M6106/19-019	FCA-125-19
M6106/19-020	FCA-125-20
M6106/19-021	FCA-125-21
M6106/19-022	FCA-125-22
M6106/19-023	FCA-125-23
M6106/19-024	FCA-125-24
M6106/19-025	FCA-125-25

MIL-PRF-83536/1

Military Part Number	CII Part Number
M83536/1-001L,M	FCB-205-0101L,M
M83536/1-002L,M	FCB-205-0102L,M
M83536/1-003L,M	FCB-205-0103L,M
M83536/1-004L,M	FCB-205-0104L,M
M83536/1-005L,M	FCB-205-0105L,M
M83536/1-006L,M	FCB-205-0106L,M
M83536/1-007L,M	FCB-205-0107L,M
M83536/1-008L,M	FCB-205-0108L,M
M83536/1-009L,M	FCB-205-0109L,M
M83536/1-010L,M	FCB-205-0110L,M
M83536/1-011L,M	FCB-205-0111L,M
M83536/1-012L,M	FCB-205-0112L,M
M83536/1-013L,M	FCB-205-0113L,M
M83536/1-014L,M	FCB-205-0114L,M
M83536/1-015L,M	FCB-205-0115L,M
M83536/1-016L,M	FCB-205-0116L,M
M83536/1-017L,M	FCB-205-0117L,M
M83536/1-018L,M	FCB-205-0118L,M
M83536/1-019L,M	FCB-205-0119L,M
M83536/1-020L,M	FCB-205-0120L,M
M83536/1-021L,M	FCB-205-0121L,M
M83536/1-022L,M	FCB-205-0122L,M
M83536/1-023L,M	FCB-205-0123L,M
M83536/1-024L,M	FCB-205-0124L,M
M83536/1-025L,M	FCB-205-0125L,M
M83536/1-026L,M	FCB-205-0126L,M
M83536/1-027L,M	FCB-205-0127L,M
M83536/1-028L,M	FCB-205-0128L,M
M83536/1-029L,M	FCB-205-0129L,M
M83536/1-030L,M	FCB-205-0130L,M
M83536/1-031L,M	FCB-205-0131L,M
M83536/1-032L,M	FCB-205-0132L,M
M83536/1-033L,M	FCB-205-0133L,M
M83536/1-034L,M	FCB-205-0134L,M
M83536/1-035L,M	FCB-205-0135L,M
M83536/1-036L,M	FCB-205-0136L,M

MIL-PRF-83536/2

Military Part Number	CII Part Number
M83536/2-001L,M	FCB-205-0201L,M
M83536/2-003L,M	FCB-205-0202L,M
M83536/2-004L,M	FCB-205-0204L,M
M83536/2-005L,M	FCB-205-0205L,M

Catalog 5-1773450-5
Revised 3-13

www.te.com

Dimensions are shown for reference purposes only. Specifications subject to change.

Dimensions are in millimeters unless otherwise specified.

USA: +1 800 522 6752
Asia Pacific: +86 0 400 820 6015
UK: +44 800 267 666

For additional support numbers please visit www.te.com

CII Electromechanical Relays (Continued)

MIL-PRF-83536/2 (continued)

Military Part Number	CII Part Number
M83536/2-006L,M	FCB-205-0206L,M
M83536/2-007L,M	FCB-205-0207L,M
M83536/2-008L,M	FCB-205-0208L,M
M83536/2-009L,M	FCB-205-0209L,M
M83536/2-010L,M	FCB-205-0210L,M
M83536/2-011L,M	FCB-205-0211L,M
M83536/2-012L,M	FCB-205-0212L,M
M83536/2-013L,M	FCB-205-0213L,M
M83536/2-014L,M	FCB-205-0214L,M
M83536/2-016L,M	FCB-205-0216L,M
M83536/2-017L,M	FCB-205-0217L,M
M83536/2-018L,M	FCB-205-0218L,M
M83536/2-019L,M	FCB-205-0219L,M
M83536/2-020L,M	FCB-205-0220L,M
M83536/2-021L,M	FCB-205-0221L,M
M83536/2-022L,M	FCB-205-0222L,M
M83536/2-023L,M	FCB-205-0223L,M
M83536/2-024L,M	FCB-205-0224L,M
M83536/2-025L,M	FCB-205-0225L,M
M83536/2-026L,M	FCB-205-0226L,M
M83536/2-027L,M	FCB-205-0227L,M
M83536/2-028L,M	FCB-205-0228L,M
M83536/2-030L,M	FCB-205-0230L,M
M83536/2-031L,M	FCB-205-0231L,M
M83536/2-032L,M	FCB-205-0232L,M
M83536/2-033L,M	FCB-205-0233L,M
M83536/2-034L,M	FCB-205-0234L,M
M83536/2-035L,M	FCB-205-0235L,M
M83536/2-036L,M	FCB-205-0236L,M
M83536/2-037L,M	FCB-205-0237L,M
M83536/2-038L,M	FCB-205-0238L,M

MIL-PRF-83536/5

Military Part Number	CII Part Number
M83536/5-001L,M	FCB-405-0501L,M
M83536/5-002L,M	FCB-405-0502L,M
M83536/5-003L,M	FCB-405-0503L,M
M83536/5-004L,M	FCB-405-0504L,M
M83536/5-005L,M	FCB-405-0505L,M
M83536/5-006L,M	FCB-405-0506L,M
M83536/5-007L,M	FCB-405-0507L,M
M83536/5-008L,M	FCB-405-0508L,M
M83536/5-009L,M	FCB-405-0509L,M
M83536/5-010L,M	FCB-405-0510L,M
M83536/5-011L,M	FCB-405-0511L,M
M83536/5-012L,M	FCB-405-0512L,M
M83536/5-013L,M	FCB-405-0513L,M
M83536/5-014L,M	FCB-405-0514L,M
M83536/5-015L,M	FCB-405-0515L,M
M83536/5-016L,M	FCB-405-0516L,M
M83536/5-017L,M	FCB-405-0517L,M
M83536/5-018L,M	FCB-405-0518L,M
M83536/5-019L,M	FCB-405-0519L,M
M83536/5-020L,M	FCB-405-0520L,M
M83536/5-021L,M	FCB-405-0521L,M
M83536/5-022L,M	FCB-405-0522L,M
M83536/5-023L,M	FCB-405-0523L,M
M83536/5-024L,M	FCB-405-0524L,M
M83536/5-025L,M	FCB-405-0525L,M
M83536/5-026L,M	FCB-405-0526L,M
M83536/5-027L,M	FCB-405-0527L,M

MIL-PRF-83536/5 (continued)

Military Part Number	CII Part Number
M83536/5-028L,M	FCB-405-0528L,M
M83536/5-029L,M	FCB-405-0529L,M
M83536/5-030L,M	FCB-405-0530L,M
M83536/5-031L,M	FCB-405-0531L,M
M83536/5-032L,M	FCB-405-0532L,M

MIL-PRF-83536/6

Military Part Number	CII Part Number
M83536/6-001L,M	FCB-405-0601L,M
M83536/6-002L,M	FCB-405-0602L,M
M83536/6-003L,M	FCB-405-0603L,M
M83536/6-004L,M	FCB-405-0604L,M
M83536/6-005L,M	FCB-405-0605L,M
M83536/6-006L,M	FCB-405-0606L,M
M83536/6-007L,M	FCB-405-0607L,M
M83536/6-008L,M	FCB-405-0608L,M
M83536/6-009L,M	FCB-405-0609L,M
M83536/6-010L,M	FCB-405-0610L,M
M83536/6-011L,M	FCB-405-0611L,M
M83536/6-012L,M	FCB-405-0612L,M
M83536/6-013L,M	FCB-405-0613L,M
M83536/6-014L,M	FCB-405-0614L,M
M83536/6-015L,M	FCB-405-0615L,M
M83536/6-016L,M	FCB-405-0616L,M
M83536/6-017L,M	FCB-405-0617L,M
M83536/6-018L,M	FCB-405-0618L,M
M83536/6-019L,M	FCB-405-0619L,M
M83536/6-020L,M	FCB-405-0620L,M
M83536/6-021L,M	FCB-405-0621L,M
M83536/6-022L,M	FCB-405-0622L,M
M83536/6-023L,M	FCB-405-0623L,M
M83536/6-024L,M	FCB-405-0624L,M
M83536/6-025L,M	FCB-405-0625L,M
M83536/6-027L,M	FCB-405-0627L,M
M83536/6-028L,M	FCB-405-0628L,M
M83536/6-029L,M	FCB-405-0629L,M
M83536/6-030L,M	FCB-405-0630L,M
M83536/6-031L,M	FCB-405-0631L,M
M83536/6-032L,M	FCB-405-0632L,M
M83536/6-033L,M	FCB-405-0633L,M
M83536/6-034L,M	FCB-405-0634L,M

MIL-PRF-83536/9

Military Part Number	CII Part Number
M83536/9-001L,M	FCA-210-0901L,M
M83536/9-002L,M	FCA-210-0902L,M
M83536/9-003L,M	FCA-210-0903L,M
M83536/9-004L,M	FCA-210-0904L,M
M83536/9-005L,M	FCA-210-0905L,M
M83536/9-006L,M	FCA-210-0906L,M
M83536/9-007L,M	FCA-210-0907L,M
M83536/9-008L,M	FCA-210-0908L,M
M83536/9-009L,M	FCA-210-0909L,M
M83536/9-010L,M	FCA-210-0910L,M
M83536/9-011L,M	FCA-210-0911L,M
M83536/9-012L,M	FCA-210-0912L,M
M83536/9-013L,M	FCA-210-0913L,M
M83536/9-014L,M	FCA-210-0914L,M
M83536/9-015L,M	FCA-210-0915L,M
M83536/9-016L,M	FCA-210-0916L,M
M83536/9-017L,M	FCA-210-0917L,M

CII Electromechanical Relays (Continued)

MIL-PRF-83536/9 (continued)

Military Part Number	CII Part Number
M83536/9-018L,M	FCA-210-0918L,M
M83536/9-019L,M	FCA-210-0919L,M
M83536/9-020L,M	FCA-210-0920L,M
M83536/9-021L,M	FCA-210-0921L,M
M83536/9-022L,M	FCA-210-0922L,M
M83536/9-023L,M	FCA-210-0923L,M
M83536/9-024L,M	FCA-210-0924L,M
M83536/9-025L,M	FCA-210-0925L,M
M83536/9-026L,M	FCA-210-0926L,M
M83536/9-027L,M	FCA-210-0927L,M
M83536/9-030L,M	FCA-210-0930L,M
M83536/9-031L,M	FCA-210-0931L,M
M83536/9-032L,M	FCA-210-0932L,M
M83536/9-033L,M	FCA-210-0933L,M
M83536/9-034L,M	FCA-210-0934L,M
M83536/9-035L,M	FCA-210-0935L,M
M83536/9-036L,M	FCA-210-0936L,M
M83536/9-037L,M	FCA-210-0937L,M
M83536/9-038L,M	FCA-210-0938L,M

MIL-PRF-83536/10

Military Part Number	CII Part Number
M83536/10-001L,M	FCA-210-1001L,M
M83536/10-003L,M	FCA-210-1003L,M
M83536/10-004L,M	FCA-210-1004L,M
M83536/10-005L,M	FCA-210-1005L,M
M83536/10-006L,M	FCA-210-1006L,M
M83536/10-007L,M	FCA-210-1007L,M
M83536/10-008L,M	FCA-210-1008L,M
M83536/10-009L,M	FCA-210-1009L,M
M83536/10-010L,M	FCA-210-1010L,M
M83536/10-011L,M	FCA-210-1011L,M
M83536/10-012L,M	FCA-210-1012L,M
M83536/10-013L,M	FCA-210-1013L,M
M83536/10-014L,M	FCA-210-1014L,M
M83536/10-016L,M	FCA-210-1016L,M
M83536/10-017L,M	FCA-210-1017L,M
M83536/10-018L,M	FCA-210-1018L,M
M83536/10-019L,M	FCA-210-1019L,M
M83536/10-020L,M	FCA-210-1020L,M
M83536/10-021L,M	FCA-210-1021L,M
M83536/10-022L,M	FCA-210-1022L,M
M83536/10-023L,M	FCA-210-1023L,M
M83536/10-024L,M	FCA-210-1024L,M
M83536/10-025L,M	FCA-210-1025L,M
M83536/10-026L,M	FCA-210-1026L,M
M83536/10-027L,M	FCA-210-1027L,M
M83536/10-029L,M	FCA-210-1029L,M
M83536/10-030L,M	FCA-210-1030L,M
M83536/10-031L,M	FCA-210-1031L,M
M83536/10-032L,M	FCA-210-1032L,M
M83536/10-033L,M	FCA-210-1033L,M
M83536/10-034L,M	FCA-210-1034L,M
M83536/10-035L,M	FCA-210-1035L,M
M83536/10-036L,M	FCA-210-1036L,M
M83536/10-037L,M	FCA-210-1037L,M
M83536/10-038L,M	FCA-210-1038L,M

MIL-PRF-83536/15

Military Part Number	CII Part Number
M83536/15-001L,M	FCA-410-1501L,M
M83536/15-002L,M	FCA-410-1502L,M
M83536/15-003L,M	FCA-410-1503L,M
M83536/15-004L,M	FCA-410-1504L,M
M83536/15-005L,M	FCA-410-1505L,M
M83536/15-006L,M	FCA-410-1506L,M
M83536/15-007L,M	FCA-410-1507L,M
M83536/15-008L,M	FCA-410-1508L,M
M83536/15-009L,M	FCA-410-1509L,M
M83536/15-010L,M	FCA-410-1510L,M
M83536/15-011L,M	FCA-410-1511L,M
M83536/15-012L,M	FCA-410-1512L,M
M83536/15-013L,M	FCA-410-1513L,M
M83536/15-014L,M	FCA-410-1514L,M
M83536/15-015L,M	FCA-410-1515L,M
M83536/15-016L,M	FCA-410-1516L,M
M83536/15-017L,M	FCA-410-1517L,M
M83536/15-018L,M	FCA-410-1518L,M
M83536/15-019L,M	FCA-410-1519L,M
M83536/15-020L,M	FCA-410-1520L,M
M83536/15-021L,M	FCA-410-1521L,M
M83536/15-022L,M	FCA-410-1522L,M
M83536/15-023L,M	FCA-410-1523L,M
M83536/15-024L,M	FCA-410-1524L,M
M83536/15-025L,M	FCA-410-1525L,M
M83536/15-026L,M	FCA-410-1526L,M
M83536/15-027L,M	FCA-410-1527L,M
M83536/15-028L,M	FCA-410-1528L,M
M83536/15-029L,M	FCA-410-1529L,M
M83536/15-030L,M	FCA-410-1530L,M
M83536/15-031L,M	FCA-410-1531L,M
M83536/15-032L,M	FCA-410-1532L,M

MIL-PRF-83536/16

Military Part Number	CII Part Number
M83536/16-001L,M	FCA-410-1601L,M
M83536/16-003L,M	FCA-410-1603L,M
M83536/16-004L,M	FCA-410-1604L,M
M83536/16-005L,M	FCA-410-1605L,M
M83536/16-006L,M	FCA-410-1606L,M
M83536/16-007L,M	FCA-410-1607L,M
M83536/16-008L,M	FCA-410-1608L,M
M83536/16-009L,M	FCA-410-1609L,M
M83536/16-010L,M	FCA-410-1610L,M
M83536/16-011L,M	FCA-410-1611L,M
M83536/16-012L,M	FCA-410-1612L,M
M83536/16-013L,M	FCA-410-1613L,M
M83536/16-015L,M	FCA-410-1615L,M
M83536/16-016L,M	FCA-410-1616L,M
M83536/16-017L,M	FCA-410-1617L,M
M83536/16-018L,M	FCA-410-1618L,M
M83536/16-019L,M	FCA-410-1619L,M
M83536/16-020L,M	FCA-410-1620L,M
M83536/16-021L,M	FCA-410-1621L,M
M83536/16-022L,M	FCA-410-1622L,M
M83536/16-023L,M	FCA-410-1623L,M
M83536/16-024L,M	FCA-410-1624L,M
M83536/16-026L,M	FCA-410-1626L,M
M83536/16-027L,M	FCA-410-1627L,M
M83536/16-028L,M	FCA-410-1628L,M
M83536/16-029L,M	FCA-410-1629L,M

Catalog 5-1773450-5
Revised 3-13

www.te.com

Dimensions are shown for reference purposes only. Specifications subject to change.

Dimensions are in millimeters unless otherwise specified.

USA: +1 800 522 6752
Asia Pacific: +86 0 400 820 6015
UK: +44 800 267 666

For additional support numbers please visit www.te.com

CII Electromechanical Relays (Continued)

MIL-PRF-83536/16 (continued)

Military Part Number	CII Part Number
M83536/16-030L,M	FCA-410-1630L,M
M83536/16-031L,M	FCA-410-1631L,M
M83536/16-033L,M	FCA-410-1633L,M
M83536/16-034L,M	FCA-410-1634L,M

MIL-PRF-83536/32

Military Part Number	CII Part Number
M83536/32-001L	FCA-325-3201L
M83536/32-002L	FCA-325-3202L
M83536/32-003L	FCA-325-3203L
M83536/32-004L	FCA-325-3204L
M83536/32-005L	FCA-325-3205L

MIL-PRF-83536/33

Military Part Number	CII Part Number
M83536/33-001L	FCA-325-3301L
M83536/33-002L	FCA-325-3302L
M83536/33-003L	FCA-325-3303L
M83536/33-004L	FCA-325-3304L
M83536/33-005L	FCA-325-3305L

MIL-PRF-83536/36

Military Part Number	CII Part Number
M83536/36-001L	FCA-125-3601L
M83536/36-002L	FCA-125-3602L
M83536/36-003L	FCA-125-3603L
M83536/36-004L	FCA-125-3604L
M83536/36-005L	FCA-125-3605L
M83536/36-006L	FCA-125-3606L
M83536/36-007L	FCA-125-3607L
M83536/36-008L	FCA-125-3608L

MIL-PRF-83536/37

Military Part Number	CII Part Number
M83536/37-001L	FCA-125-3701L
M83536/37-002L	FCA-125-3702L
M83536/37-003L	FCA-125-3703L
M83536/37-004L	FCA-125-3704L
M83536/37-005L	FCA-125-3705L

CII Time Delay Relays

MIL-PRF-83726/28

Military Part Number	Kilovac Part Number
M83726/28-1000P	TD228-1000P
through	through
M83726/28-5003P	TD228-5003P
M83726/28-1000S	TD228-1000S
through	through
M83726/28-5003S	TD228-5003S

MIL-PRF-83726/29

Military Part Number	Kilovac Part Number
M83726/29-1000P	TD229-1000P
through	through
M83726/29-5003P	TD229-5003P
M83726/29-1000S	TD229-1000S
through	through
M83726/29-5003S	TD229-5003S

MIL-PRF-83726/30

Military Part Number	Kilovac Part Number
M83726/30-1000P	TD230-1000P
through	through
M83726/30-5003P	TD230-5003P
Military Part Number	**Kilovac Part Number**
M83726/30-1000S	TD230-1000S
through	through
M83726/30-5003S	TD230-5003S

MIL-PRF-83726/31

Military Part Number	Kilovac Part Number
M83726/31-1000P	TD231-1000P
through	through
M83726/31-5003P	TD231-5003P
M83726/31-1000S	TD231-1000S
through	through
M83726/31-5003S	TD231-5003S

Hartman Contactors — MS27750

Military Part Number	Hartman Part Number
MS27750-1	M277501
MS27750-2	M277502

Catalog 5-1773450-5
Revised 3-13

www.te.com

Dimensions are shown for reference purposes only. Specifications subject to change.

Dimensions are in millimeters unless otherwise specified.

USA: +1 800 522 6752
Asia Pacific: +86 0 400 820 6015
UK: +44 800 267 666

For additional support numbers please visit www.te.com

Kilovac Vacuum Relays

MIL-DTL-83725/1

Military Part Number	Kilovac Part Number
M83725/1-001	MH-8A
M83725/1-002	MH-8
M83725/1-003	MH-8C
M83725/1-004	MH-8AF
M83725/1-005	MH-8F
M83725/1-006	MH-8CF

MIL-DTL-83725/2

Military Part Number	Kilovac Part Number
M83725/2-001	MH-17A
M83725/2-002	MH-17
M83725/2-003	MH-17C
M83725/2-004	MH-17A/115VDC
M83725/2-005	MH-17/115VDC
M83725/2-006	MH-17C/115VDC

MIL-DTL-83725/4

Military Part Number	Kilovac Part Number
M83725/4-001	
MHC-3	

MIL-DTL-83725/5

Military Part Number	Kilovac Part Number
M83725/5-001	MHC-1

MIL-DTL-83725/10

Military Part Number	Kilovac Part Number
M83725/10-001	MK43B834-001
M83725/10-002	MK43B832-002
M83725/10-003	MK43B332-003
M83725/10-004	MK43B332-004
M83725/10-005	MK43B734-005
M83725/10-006	MK43B732-006
M83725/10-007	MK43B234-007
M83725/10-008	MK43B232-008

MIL-DTL-83725/16

Military Part Number	Kilovac Part Number
M83725/16-001	MK43C734-001
M83725/16-002	MK43C834-002
M83725/16-003	MK43C732-003
M83725/16-004	MK43C832-004
M83725/16-005	MK43C234-005
M83725/16-006	MK43C334-006
M83725/16-007	MK43C232-007
M83725/16-008	MK43C332-008

MIL-DTL-83725/17

Military Part Number	Kilovac Part Number
M83725/17-001	MK43A834-001
M83725/17-002	MK43A832-002
M83725/17-003	MK43A334-003
M83725/17-004	MK43A332-004
M83725/17-005	MK43A734-005
M83725/17-006	MK43A732-006
M83725/17-007	MK43A234-007
M83725/17-008	MK43A232-008

MIL-DTL-83725/18

Military Part Number	Kilovac Part Number
M83725/18-003	MK47B334-003

MIL-DTL-83725/21

Military Part Number	Kilovac Part Number
M83725/21-001	MK41A234-001
M83725/21-002	MK41A334-002
M83725/21-003	MK41A534-003
M83725/21-004	MK41A232-004
M83725/21-005	MK41A332-005
M83725/21-006	MK41A532-006
M83725/21-007	MK41A734-007
M83725/21-008	MK41A834-008
M83725/21-009	MK41A934-009
M83725/21-010	MK41A732-010
M83725/21-011	MK41A832-011
M83725/21-012	MK41A932-012

MIL-DTL-83725/22

Military Part Number	Kilovac Part Number
M83725/22-001	MK41B234-001
M83725/22-002	MK41B334-002
M83725/22-003	MK41B534-003
M83725/22-004	MK41B232-004
M83725/22-005	MK41B332-005
M83725/22-006	MK41B532-006
M83725/22-007	MK41B734-007
M83725/22-008	MK41B834-008
M83725/22-009	MK41B934-009
M83725/22-010	MK41B732-010
M83725/22-011	MK41B832-011
M83725/22-012	MK41B932-012

MIL-DTL-83725/23

Military Part Number	Kilovac Part Number
M83725/23-001	MK41C234-001
M83725/23-002	MK41C334-002
M83725/23-003	MK41C534-003
M83725/23-004	MK41C232-004
M83725/23-005	MK41C332-005
M83725/23-006	MK41C532-006
M83725/23-007	MK41C734-007
M83725/23-008	MK41C834-008
M83725/23-009	MK41C934-009
M83725/23-010	MK41C732-010
M83725/23-011	MK41C832-011
M83725/23-012	MK41C932-012

MIL-DTL-83725/24

Military Part Number	Kilovac Part Number
M83725/24-001	MK41P334-001
M83725/24-002	MK41P332-002
M83725/24-003	MK40P334-003
M83725/24-004	MK40P332-004

Catalog 5-1773450-5
Revised 3-13

www.te.com

Dimensions are shown for reference purposes only. Specifications subject to change.

Dimensions are in millimeters unless otherwise specified.

USA: +1 800 522 6752
Asia Pacific: +86 0 400 820 6015
UK: +44 800 267 666

For additional support numbers please visit www.te.com

Kilovac Solid State Relays

MIL-PRF-28750/5

Military Part Number	Kilovac Part Number
M28750/5-001W	JTS5-1W
M28750/5-001Y	JTS5-1Y

MIL-PRF-28750/6

Military Part Number	Kilovac Part Number
M28750/6-001W	JTS6-1W
M28750/6-001Y	JTS6-1Y

MIL-PRF-28750/7

Military Part Number	Kilovac Part Number
M28750/7-001W	JTS7-1W
M28750/7-001Y	JTS7-1Y

MIL-PRF-28750/9

Military Part Number	Kilovac Part Number
M28750/9-001W	JDS9-1W
M28750/9-001Y	JDS9-1Y

MIL-PRF-28750/10

Military Part Number	Kilovac Part Number
M28750/10-001W	JPS10-1W
M28750/10-001Y	JPS10-1Y
M28750/10-002W	JPS10-2W
M28750/10-002Y	JPS10-2Y

DSCC 85092

Military Part Number	Kilovac Part Number
85092-001	MS14-1Y
85092-002	MS14-2Y

DSCC 86031

Military Part Number	Kilovac Part Number
86031-001	PS12-1Y

DSCC 87034

Military Part Number	Kilovac Part Number
87034-001	MS14-3Y

DSCC 88062

Military Part Number	Kilovac Part Number
88062-002	DS11-1002
88062-004	DS11-1000
88062-006	DS11-1001
88062-008	DS11-1Y

DSCC 89116

Military Part Number	Kilovac Part Number
89116-002	MS18-1002
89116-004	MS18-1004
89116-006	MS18-1006

DSCC 90091

Military Part Number	Kilovac Part Number
90091-002	DS13-1002
90091-004	DS13-1000
90091-006	DS13-1001
90091-008	DS13-1Y

Superseded Conversion Index for MIL-PRF-6106 Part Numbers Superseded by MIL-PRF-83536

MS27400

Superseded MIL Spec	Current MIL Spec/ CII Part Number
MS27400-5	M83536/15-021M FCA-410-1521M
MS27400-6	M83536/15-022M FCA-410-1522M
MS27400-9	M83536/15-021M FCA-410-1521M
MS27400-10	M83536/15-022M FCA-410-1522M
MS27400-17	M83536/16-022M FCA-410-1622M
MS27400-18	M83536/16-031M FCA-410-1631M
MS27400-19	M83536/15-024M FCA-410-1524M
MS27400-21	M83536/15-024M FCA-410-1524M
MS27400-23	M83536/16-021M FCA-410-1621M
MS27400-24	M83536/16-024M FCA-410-1624M
MS27400-29	M83536/16-021M FCA-410-1621M
MS27400-30	M83536/16-024M FCA-410-1624M
MS27400-31	M83536/16-022M FCA-410-1622M
MS27400-35	M83536/15-020M FCA-410-1520M
MS27400-36	M83536/15-020M FCA-410-1520M
MS27400-37	M83536/16-020M FCA-410-1620M
MS27400-38	M83536/16-020M FCA-410-1620M
MS27400-40	M83536/15-018M FCA-410-1518M
MS27400-41	M83536/15-017M FCA-410-1517M
MS27400-42	M83536/16-018M FCA-410-1618M
MS27400-43	M83536/16-017M FCA-410-1617M
MS27400-44	M83536/15-018M FCA-410-1518M
MS27400-46	83536/16-018M FCA-410-1618M
MS27400-47	M83536/16-017M FCA-410-1617M

Catalog 5-1773450-5
Revised 3-13

www.te.com

Dimensions are shown for reference purposes only. Specifications subject to change.

Dimensions are in millimeters unless otherwise specified.

USA: +1 800 522 6752
Asia Pacific: +86 0 400 820 6015
UK: +44 800 267 666

For additional support numbers please visit www.te.com

Superseded Conversion Index for MIL-PRF-6106 Part Numbers
Superseded by MIL-PRF-83536 (Continued)

MS27401

Superseded MIL Spec	Current MIL Spec/ CII Part Number
MS27401-4	M83536/9-022M FCA-210-0922M
MS27401-5	M83536/9-023M FCA-210-0923M
MS27401-6	M83536/9-024M FCA-210-0924M
MS27401-10	M83536/9-009M FCA-210-0929M
MS27401-13	M83536/9-023M FCA-210-0923M
MS27401-14	M83536/9-024M FCA-210-0924M
MS27401-21	M83536/9-026M FCA-210-0926M
MS27401-23	M83536/9-026M FCA-210-0926M
MS27401-25	M83536/10-023M FCA-210-1023M
MS27401-26	M83536/10-026M FCA-210-1026M
MS27401-27	M83536/10-024M FCA-210-1024M
MS27401-30	M83536/10-007M FCA-210-1007M
MS27401-31	M83536/10-023M FCA-210-1023M
MS27401-32	M83536/10-026M FCA-210-1026M
MS27401-33	M83536/10-024M FCA-210-1024M
MS27401-37	M83536/9-025M FCA-210-0925M
MS27401-38	M83536/9-025M FCA-210-0925M
MS27401-39	M83536/10-025M FCA-210-1025M
MS27401-40	M83536/10-025M FCA-210-1025M
MS27401-42	M83536/9-022M FCA-210-0922M
MS27401-43	M83536/10-022M FCA-210-1022M
MS27401-44	M83536/10-022M FCA-210-1022M
MS27401-46	M83536/9-020M FCA-210-0920M
MS27401-47	M83536/9-019M FCA-210-0919M
MS27401-48	M83536/10-020M FCA-210-1020M
MS27401-49	M83536/10-019M FCA-210-1019M
MS27401-50	M83536/9-020M FCA-210-0920M
MS27401-51	M83536/9-019M FCA-210-0919M
MS27401-52	M83536/10-020M FCA-210-1020M

MS27401 (continued)

Superseded MIL Spec	Current MIL Spec/ CII Part Number
MS27401-53	M83536/10-019M FCA-210-1019M
MS27401-58	M83536/9-027M FCA-210-0927M
MS27401-59	M83536/10-027M FCA-210-1027M

MS27743

Superseded MIL Spec	Current MIL Spec/ CII Part Number
MS27743-1	M83536/32-002L FCA-325-3202L
MS27743-2	M83536/32-003L FCA-325-3203L
MS27743-3	M83536/32-005L FCA-325-3205L
MS27743-4	M83536/32-002L FCA-325-3202L
MS27743-5	M83536/32-005L FCA-325-3205L
MS27743-6	M83536/32-003L FCA-325-3203L
MS27743-10	M83536/32-002L FCA-325-3202L
MS27743-11	M83536/32-005L FCA-325-3205L
MS27743-12	M83536/32-003L FCA-325-3203L
MS27743-16	M83536/33-002L FCA-325-3302L
MS27743-17	M83536/33-005L FCA-325-3305L
MS27743-18	M83536/33-003L FCA-325-3303L
MS27743-22	M83536/33-002L FCA-325-3302L
MS27743-23	M83536/33-005L FCA-325-3305L
MS27743-24	M83536/33-003L FCA-325-3303L
MS27743-28	M83536/32-001L FCA-325-3201L
MS27743-29	M83536/32-004L FCA-325-3204L
MS27743-30	M83536/32-001L FCA-325-3201L
MS27743-31	M83536/32-004L FCA-325-3204L
MS27743-32	M83536/33-001L FCA-325-3301L
MS27743-33	M83536/33-004L FCA-325-3304L
MS27743-34	M83536/33-001L FCA-325-3301L
MS27743-35	M83536/33-004L FCA-325-3304L

Catalog 5-1773450-5
Revised 3-13

www.te.com

Dimensions are shown for reference purposes only. Specifications subject to change.

Dimensions are in millimeters unless otherwise specified.

USA: +1 800 522 6752
Asia Pacific: +86 0 400 820 6015
UK: +44 800 267 666

For additional support numbers please visit www.te.com

Superseded Conversion Index for MIL-PRF-6106 Part Numbers
Superseded by MIL-PRF-83536 (Continued)

MIL-PRF-6106/21

Superseded MIL Spec	Current MIL Spec/ CII Part Number
M6106/21-003	M83536/2-028M FCB-205-0228M

MIL-PRF-6106/22

Superseded MIL Spec	Current MIL Spec/ CII Part Number
M6106/22-003	M83536/6-025M FCB-405-0625M

MIL-PRF-6106/27

Superseded MIL Spec	Current MIL Spec/ CII Part Number
M6106/27-001	M83536/1-019M FCB-205-0119M
M6106/27-002	M83536/1-019M FCB-205-0119M
M6106/27-003	M83536/2-019M FCB-205-0219M
M6106/27-004	M83536/2-019M FCB-205-0219M
M6106/27-005	M83536/1-020M FCB-205-0120M
M6106/27-006	M83536/1-020M FCB-205-0120M
M6106/27-007	M83536/2-020M FCB-205-0220M
M6106/27-008	M83536/2-020M FCB-205-0220M
M6106/27-009	M83536/1-021M FCB-205-0121M
M6106/27-010	M83536/1-021M FCB-205-0121M
M6106/27-011	M83536/2-021M FCB-205-0221M
M6106/27-012	M83536/2-021M FCB-205-0221M
M6106/27-013	M83536/1-022M FCB-205-0122M
M6106/27-014	M83536/1-022M FCB-205-0122M
M6106/27-015	M83536/2-022M FCB-205-0222M
M6106/27-016	M83536/2-022M FCB-205-0222M
M6106/27-017	M83536/1-023M FCB-205-0123M
M6106/27-018	M83536/1-023M FCB-205-0123M
M6106/27-019	M83536/2-023M FCB-205-0223M
M6106/27-020	M83536/2-023M FCB-205-0223M
M6106/27-021	M83536/1-024M FCB-205-0124M
M6106/27-022	M83536/1-024M FCB-205-0124M
M6106/27-023	M83536/2-024M FCB-205-0224M
M6106/27-024	M83536/2-024M FCB-205-0224M
M6106/27-025	M83536/1-025M FCB-205-0125M
M6106/27-026	M83536/1-025M FCB-205-0125M
M6106/27-027	M83536/2-025M FCB-205-0225M
M6106/27-028	M83536/2-025M FCB-205-0225M
M6106/27-029	M83536/1-026M FCB-205-0126M
M6106/27-030	M83536/1-026M FCB-205-0126M
M6106/27-031	M83536/2-026M FCB-205-0226M
M6106/27-032	M83536/2-026M FCB-205-0226M
M6106/27-037	M83536/1-027M FCB-205-0127M
M6106/27-038	M83536/1-027M FCB-205-0127M
M6106/27-039	M83536/2-027M FCB-205-0227M
M6106/27-040	M83536/2-027M FCB-205-0227M

MIL-PRF-6106/28

Superseded MIL Spec	Current MIL Spec/ CII Part Number
M6106/28-001	M83536/5-017M FCB-405-0517M
M6106/28-002	M83536/5-017M FCB-405-0517M
M6106/28-003	M83536/6-017M FCB-405-0617M
M6106/28-004	M83536/6-017M FCB-405-0617M
M6106/28-005	M83536/5-018M FCB-405-0518M
M6106/28-006	M83536/5-018M FCB-405-0518M
M6106/28-007	M83536/6-018M FCB-405-0618M
M6106/28-008	M83536/6-018M FCB-405-0618M
M6106/28-023	M83536/6-022M FCB-405-0622M
M6106/28-024	M83536/6-022M FCB-405-0622M
M6106/28-025	M83536/5-023M FCB-405-0523M
M6106/28-026	M83536/5-023M FCB-405-0523M
M6106/28-027	M83536/6-023M FCB-405-0623M
M6106/28-028	M83536/6-023M FCB-405-0623M
M6106/28-029	M83536/5-024M FCB-405-0524M

Superseded Conversion Index for MIL-PRF-6106 Part Numbers Superseded by MIL-PRF-83536 (Continued)

MIL-PRF-6106/28

Superseded MIL Spec	Current MIL Spec/ CII Part Number
M6106/28-030	M83536/5-024M FCB-405-0524M
M6106/28-031	M83536/6-024M FCB-405-0624M
M6106/28-032	M83536/6-024M FCB-405-0624M
M6106/28-037	M83536/5-012M FCB-405-0512M
M6106/28-038	M83536/6-012M FCB-405-0612M
M6106/28-039	M83536/5-013M FCB-405-0513M
M6106/28-040	M83536/6-013M FCB-405-0613M
M6106/28-041	M83536/5-014M FCB-405-0514M
M6106/28-042	M83536/6-014M FCB-405-0614M
M6106/28-043	M83536/5-015M FCB-405-0515M
M6106/28-044	M83536/6-015M FCB-405-0615M
M6106/28-045	M83536/5-016M FCB-405-0516M
M6106/28-046	M83536/6-016M FCB-405-0616M

Catalog 5-1773450-5
Revised 3-13

www.te.com

Dimensions are shown for reference purposes only. Specifications subject to change.

Dimensions are in millimeters unless otherwise specified.

USA: +1 800 522 6752
Asia Pacific: +86 0 400 820 6015
UK: +44 800 267 666

For additional support numbers please visit www.te.com

Engineering Notes

Catalog 5-1773450-5
Revised 3-13

www.te.com

Dimensions are shown for reference purposes only. Specifications subject to change.

Dimensions are in millimeters unless otherwise specified.

USA: +1 800 522 6752
Asia Pacific: +86 0 400 820 6015
UK: +44 800 267 666

For additional support numbers please visit www.te.com

Table of Contents

Non-power Switching Applications (Isolation Only) . . . . . .16-2 – 16-4
Power Switching Applications . . . . . .16-5 – 16-8
Test Equipment for Hartman Relays and Contactors 16-9
Typical KILOVAC Relay Applications . . . . . .16-10 – 16-12
Relay Applications Notes . . . . . .16-13 – 16-16
Common KILOVAC High Voltage Relay Designs 16-17
Definition of Specifications 16-18, 16-19
Contact Configurations 16-20

Catalog 5-1773450-5
Revised 3-13

www.te.com

Dimensions are shown for reference purposes only. Specifications subject to change.

Dimensions are in millimeters unless otherwise specified.

USA: +1 800 522 6752
Asia Pacific: +86 0 400 820 6015
UK: +44 800 267 666

For additional support numbers please visit www.te.com

Non-Power Switching Applications (Isolation Only)

If your application requires only that the relay carry current, provide voltage isolation, and the power is always removed prior to actuating the relay contacts, then you have a relatively simple task selecting the proper relay based on its voltage isolation and current carry capability.

If there is any possibility that the relay could at some time switch a load, for example in a fault condition, then a load switching relay should be selected. Please review next page to determine which TE relays meet your voltage and current carry needs and then proceed directly to the indicated product page.

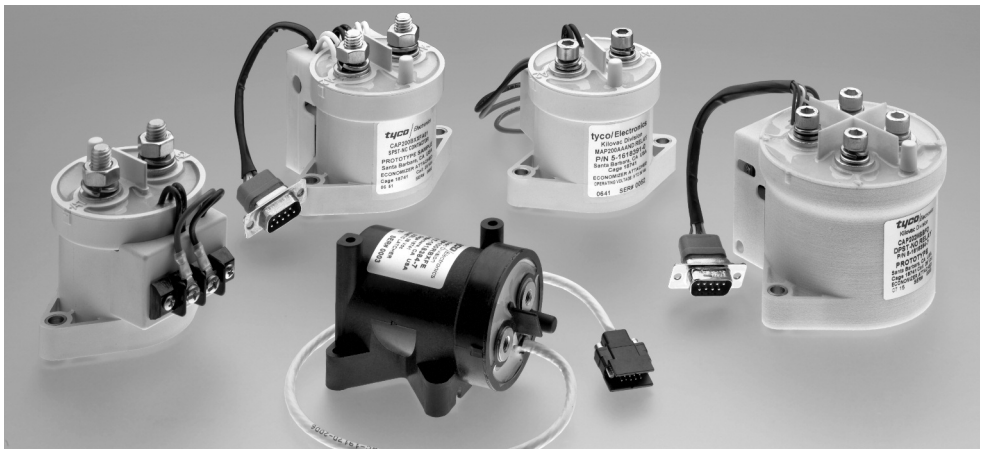

Technical Considerations

When the relay will not be required to power switch, the primary issues to consider are the maximum system voltage and the maximum current the relay must carry. Normally these can be easily determined and, by reviewing the product specifications, the appropriate relay can be selected.

Momentary or Pulsed Loads Through Closed Contacts

KILOVAC vacuum and gas-filled relays can handle momentary current pulses much higher than their continuous current rating. The key is to keep the temperature rise of the relay within safe limits since the normal failure mode in high peak current applications will be either contact welding from very high, very short current pulses or loss of seal integrity of the glass-to-metal, ceramic-to-metal or epoxy-to-metal seals due to excessive heat.

Figure 1. Recommended Relays For High Voltage Isolation (Non-power Switching) Applications

Part Number	Isolation Voltage	Continuous Current	Contact Form	Load Switch*	Peak Current	See Page
MAP100 CAP100 EV100 LEV100	1800 V	90 Amps	A	Yes	600***	7-8, 7-9 7-18 – 7-20 7-27, 7-28 7-29 – 7-31
MAP200 CAP200 EV200 LEV200 CAP202	1800 V	150 Amps	A	Yes	1,000***	7-10, 7-11 7-16, 7-17 7-21 – 7-26 7-32 – 7-33 7-16, 7-17
EV500	2000 V	600 Amps	A	Yes	3,300***	7-46, 7-47
HC-1	3.5 kV	25 Amps	C	No	—	7-58
HC-5	3.5 kV	8 Amps	C	Yes	200**	7-58
K41 Series	5.0 kV	25 Amps	A,B,C,P,R	Yes	175**	7-59, 7-60
HC-2	8.0 kV	25 Amps	C	No	200**	7-64
HC-6	8.0 kV	8 Amps	C	Yes	200**	7-64
H-18	8.0 kV	10 Amps	2C	Yes	—	7-65
K81 Series	10.0 kV	10 Amps	A,B,C	Yes	175**	7-67
K43 Series	10.0 kV	25 Amps	A,B,C,P,R	Yes	175**	7-69, 7-70
KC-14, KC-18	15.0 kV	50 Amps	C	No	—	7-73
H-26	15.0 kV	30 Amps	4C	Yes	—	7-76
H-19	20.0 kV	30 Amps	2C	Yes	—	7-77
KC-20, KC-30	25.0 kV	110, 55 Amps	X,Y	No	—	7-79
KC-22, KC-32	25.0 kV	64, 45 Amps	X,Y	Yes	500**	7-80
K62 Series	25.0 kV	18 Amps	A,B,C	Yes	350**	7-79
K61 Series	35.0 kV	10 Amps	A,B,C	Yes	450**	7-84
K64C	50.0 kV	10 Amps	C	Yes	400**	7-85
K70 Series	70.0 kV	10 Amps	A,B,C	Yes	400**	7-86

*In Fault Condition. "Yes" means relay is capable of tolerating some faults.
**Pulse, 5ms Duration, Closed Contacts: Failure=Welded Contacts
***Pulse, 1s Duration, Closed Contacts

Catalog 5-1773450-5
Revised 3-13

www.te.com

Dimensions are shown for reference purposes only. Specifications subject to change.

Dimensions are in millimeters unless otherwise specified.

USA: +1 800 522 6752
Asia Pacific: +86 0 400 820 6015
UK: +44 800 267 666

For additional support numbers please visit www.te.com

Non-Power Switching Applications (Isolation Only) (Continued)

Therefore, there are two key parameters you must consider in selecting a relay for this type of application. First, refer to Figure 1 for recommended relays and their estimated peak current pulse rating. Second, you must calculate the duty cycle of the pulse to ensure that you will not exceed, on average, the relay's continuous current rating. To calculate duty cycle,

Pulse duration (in seconds) X pulse rep rate (in cycles per second) x 100 = duty cycle (in percent)

The duty cycle times pulse peak current should not exceed the continuous current rating of the relay.

For example: A pulse of 50 amps, lasting 50 milliseconds is passed through the relay every 200 milliseconds. The duty cycle is ...

.050 pulse duration X 1 cycle/.200 seconds = 25% duty cycle

The average current is ...

25% X 50 amp peak current = 12.5 amps continuous

Thus, a relay with a 12.5 amp or greater continuous current rating will be suitable for this application.

Radio Frequency (RF) Applications

Because of their good insulation qualities and low contact resistance, vacuum relays are quite commonly used in RF applications such as transmitters, antenna couplers, semiconductor processing equipment, and power supplies. However, operating any relay at RF imposes current and voltage limitations. The "skin effect" of RF current on the surface of the conductor creates the current limitation. As frequency is increased, the effective cross-section of the conductor path is decreased, resulting in heating of the conductor surface. This heating limits the maximum current the conductor can carry due to the inherent temperature limitations of the ceramic-to-metal or glass-to-metal seals.

When the relay is used as an insulator, there is RF voltage across the open contacts, or between contacts and ground. For all practical purposes, this insulator has a high voltage capacitance of from 1 to 2 picofarads. The leakage current flowing through this insulator/capacitor results in the heating of the lossy elements of the insulator which, again due to the temperature limitations of the seals, limits the maximum RF voltage that can be handled. In addition, contact gaps simply break down at lower voltages with RF than DC.

These effects make it necessary to derate the current and voltage specifications for operating at RF. Ceramic relays can handle higher RF power than glass relays due to their reduced susceptibility to failure from localized heating; however, both types are commonly used. Many of the KILOVAC relays recommended for RF applications have pure copper contacts for better heat conduction and increased ratings. Because of this, relays in RF applications should normally not be switched under load as a catastrophic failure caused by melting of the relay contacts may occur. If you have an application which requires high frequency power switching, call TE at the numbers listed below.

TE Connectivity offers a wide variety of high voltage relays for RF applications to 32 MHz.

Non-Power Switching Applications (Isolation Only) (Continued)

Figure 2 shows the typical RF deratings that can be expected when specifying vacuum relays. Specific relay deratings are shown on the product pages. Figure 3 displays the relays recommended for RF applications.

Typical RF Derating For High Voltage Vacuum Relays

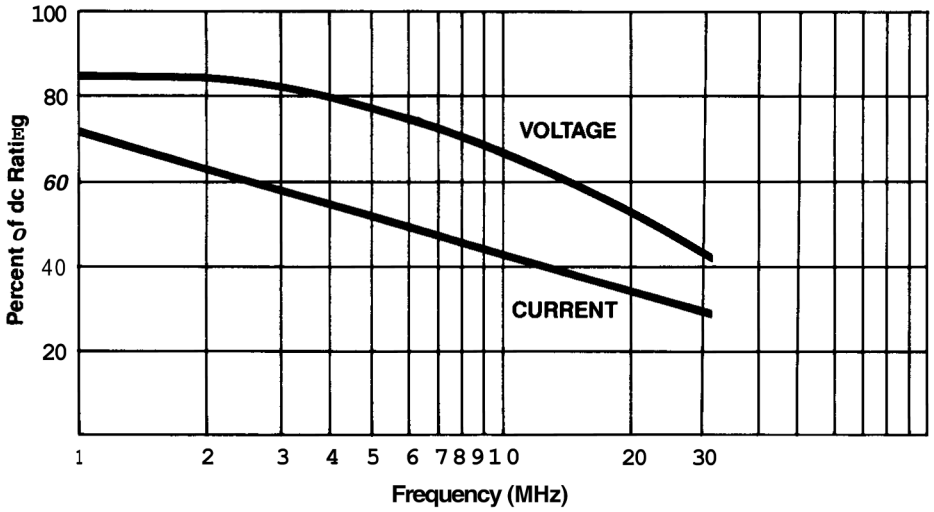

Figure 2.

Figure 3.

Part Number	Rated Voltage (dc)	Current Carry @ 32 MHz	Contact Form	See Page
S06CBA335	2.0 kV	6 Amps	A	7-49
K45C	2.0 kV	6 Amps	C	7-57
HC-1	3.5 kV	7 Amps	C	7-58
S06FNA218	5.0 kV	8 Amps	A	7-49
K41 Series	5.0 kV	12 Amps	A,B,C,P,R	7-59, 7-60
K40P	5.0 kV	8 Amps	P	7-61
S06HBA318	7.0 kV	8 Amps	A	7-49
S06JNB218	8.0 kV	8 Amps	B	7-49
K47 Series	8.0 kV	3 Amps	A,B	7-63
K44P	8.0 kV	20 Amps	P	7-66
H-18	8.0 kV	2 Amps	2C	7-65
K43 Series	10.0 kV	10 Amps	A,B,C,P,R	7-69, 7-70
H-14	12.0 kV	8 Amps	2C	7-71
H-16	12.0 kV	4 Amps	2C	7-71
KC-2, KC-11	15.0 kV	10 Amps	C	7-74
H-26	15.0 kV	4 Amps	4C	7-76
H-19	20.0 kV	6 Amps	2C	7-77
H-17	25.0 kV	8 Amps	C	7-77
KC-20, KC-30	25.0 kV	30, 15 Amps	X,Y	7-79
H-23, H-24	30.0 kV	7 Amps	A,B	7-81

Power Switching Applications

High voltage power switching applications are those which require the relay to make and/or break the load. In most applications, it is important to know the highest potential fault current which could be encountered and how many times the relay or contactor will be required to clear the fault since this will determine the relay or contactor which should be selected.

Load switching in AC circuits is sometimes easier on the relay due to the natural arc extinction which occurs as the current passes through zero. Because of this, relay ratings are usually much higher when switching AC circuit loads.

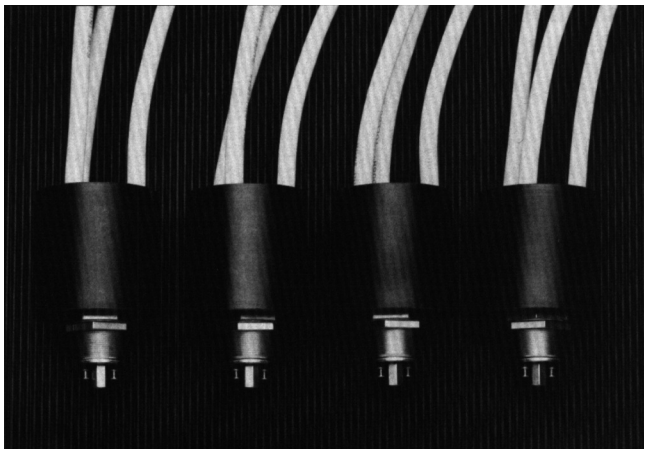

Switching of direct current loads creates special problems for relays. Many traditional relays and contactors have difficulty interrupting loads above 48 Vdc. TE has a broad product line of relays, contactors, and power controllers which have been specially designed to handle the problems of DC switching. When load switching must be done at voltages above 1000 volts, refer to the power switching curve on the product data pages or the below graphs for relay families. For specific recommendations, call TE at the numbers listed below.

Higher current affects relay ratings more than higher voltage. There are no hard and fast rules which can be used to develop a relay's electrical life rating given voltage and current switching specifications. Once again, experience and thorough testing in the actual circuit are the best ways to establish relay life and reliability. Figure 4 illustrates the operating characteristic determined experimentally for one family of power switching products.

TE vacuum relays and contactors have been selected for a variety of high reliability space and undersea fiber applications.

Figure 4. Typical Hot Switching Resistive load-Life Characteristics K41A, K43A, K81A Relays

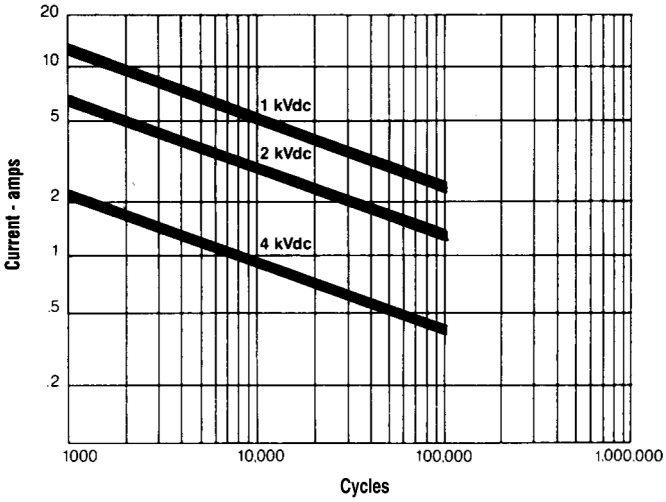

Note: Life expectancy for SPDT relays is lower due to greater contact bounce

Power Switching Applications (Continued)

Capacitive Discharge or "Make-Only" Power Switching

One of the most common applications for high voltage relays is the charge and discharge of a high voltage capacitor. Since this normally involves "make-only" power switching, KILOVAC SF-6 gas-filled relays generally offer superior performance to vacuum relays. In order to select the proper relay, you must determine the peak current and RC time constant in addition to the normal parameters of voltage, contact configuration, etc. The RC time constant is the time it takes for the capacitor to discharge 63% of its stored electrical charge. Virtually all electrical charge will be discharged in 5 RC time constants. The RC time constant is simply the product of the circuit resistance and capacitance. For example, a circuit discharging an 8 microFarad capacitor through 100 ohms of series resistance will have an RC time constant of 800 microseconds.

(R x C)= 100 X .000008 = .0008 or 800 microseconds

It is often difficult to specify the proper relay for capacitive discharge applications because of the many potential variables. It is especially important in these applications to conduct tests to determine which relays are suitable and their reliability.

Figure 5 below is based on "rules of thumb" and actual circuit data. If your application differs significantly from those shown in the figure, contact your local Tyco Electronic sales engineer.

Figure 5. Recommended Relays for Capacitive Discharge Applications at Rated Voltage

Part Number	Rated Voltage	Contact Form	Peak Current 500 ns RC Time	Peak Current 500 µs RC Time	Peak Current 1 ms RC Time	See Page
HC-5	3.5 kV	C	50 A	25 A	5 A	7-58
KM-17	5.5 kV	2C	150 A	75 A	35 A	7-62
HC-6	8.0 kV	C	50 A	25 A	5 A	7-64
KC-15, 16	15.0 kV	C	200 A	100 A	10 A	7-75
KC-28, 38	25.0 kV	X,Y	1500 A	1000 A	400 A	7-80
K61 Series	35.0 kV	A,B,C	500 A	250 A	125 A	7-82
K64C	50.0 kV	C	400 A	200 A	100 A	7-85
K70 Series	70.0 kV	A,B,C	350 A	175 A	90 A	7-86

Note: Relay life can be expected to be in excess of 100,000 cycles at these load levels. This chart is intended to serve as a general guide only. We recommend you test the relay in your circuit to confirm its suitability.

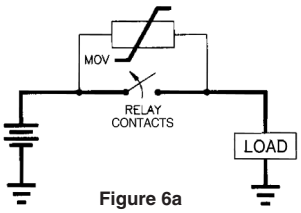

Figure 6a

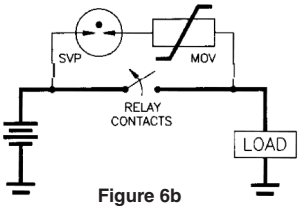

Figure 6b

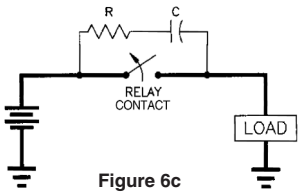

Figure 6c

Failure Modes in Capacitive Discharge Switching

There are two possible failure modes in capacitive discharge switching: contact welding and shortened load life. Both are due to excessive contact heating from high peak currents and/ or long RC times. Therefore, we often recommend that customers either reduce the capacitance or increase the resistance of their circuit to improve relay performance.

Direct Current Power Switching

Vacuum and hydrogen gas filled relays and contactors are being selected more and more often for use in direct current electrical systems. Switching a direct current load is one of the toughest tasks a relay can be asked to perform. Many times the relay or contactor will also be called upon to clear the maximum fault current, often several times higher than the normal load. Unlike AC power, where both voltage and current regularly pass through zero allowing the arc formed during switching to naturally extinguish, a DC load can only be interrupted by forcing the arc voltage higher than the source voltage. A number of schemes are commonly used to increase the arc voltage, ranging from arc chutes or multiple contacts to magnetic blowout, which lengthens the arc path.

The TE power switching relays are designed to interrupt rated power as supplied. However, reactive inductive loads can result in significant voltage overshoot in some applications. Voltage overshoot can be suppressed by a variety of measures.

Figure 6a, b, and c show three methods used to limit the voltage transient developed across the relay contacts when interrupting inductive loads. The same circuits impressed across the load will protect it from voltage overshoot:

- Figure 6a shows a Metal Oxide Varistor (MOV) across the power contacts. We recommends this circuit for most general purpose applications and suggests the user consult MOV manufacturers application notes since the proper MOV selection depends on transient energy, etc. MOV's are compact in size and low in cost.

Catalog 5-1773450-5
Revised 3-13

www.te.com

Dimensions are shown for reference purposes only. Specifications subject to change.

Dimensions are in millimeters unless otherwise specified.

USA: +1 800 522 6752
Asia Pacific: +86 0 400 820 6015
UK: +44 800 267 666

For additional support numbers please visit www.te.com

Power Switching Applications (Continued)

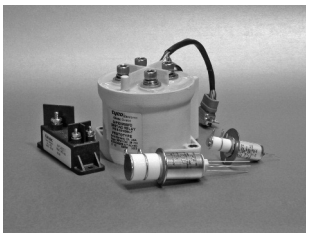

TE offers a wide variety of relays and contactors for power switching applications.

- Figure 6b indicates an MOV in series with an SVP (Surge Voltage Protector — spark gap). The MOV absorbs transient overshoot energy, the SOV provides excellent dielectric once the circuit is open. This solution is also compact in size and low cost.
- Figure 6c illustrates the traditional RC Snubber. The snubber will suffice for low power and energy situations, but suffers a size and cost penalty at high power.

KILOVAC vacuum, hydrogen and nitrogen gas-filled "super sealed" relays have some significant inherent advantages in switching high current DC loads. These include:

- Longer load life due to ability to use high temperature contact materials
- Low contact resistance due to the elimination of contact oxidation/contamination
- Lighter weight and smaller size due to smaller contacts and shorter contact gaps
- Low coil power due to optimized magnetic circuits and small size
- High integrity, durable ceramic to metal hermetic seals

Today, the TE products have been rated at 320 Vdc since this is the most common voltage being adopted by many new applications. However, the new products are versatile, encompassing a wide range of power, voltage, and current applications.

For detailed application notes on EV relays, contact TE to request a copy of the TE EVS-13 paper entitled, "Use of High Current Relays in Electric and Hybrid Electric Vehicles".

Double Throw Power Switching

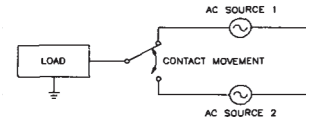

Figure 7a. Un-synchronized AC Loads — Generally not recommended

Double throw relays like the TE PD5C are used in a variety of "hot" or "power" switching applications, and they generally work fine. However, many application problems can be avoided by verifying that the relay was tested with the polarity and load conditions exactly like the application. In the aerospace industry, it is generally well known that switching un-synchronized AC loads is not recommended (see Figure 7a).

We found another application that took our experts some time to troubleshoot. This application required the charging and discharging of a capacitor. The double throw relay was used to switch a capacitor, which was in series with a resistor, between the plus and minus of the power source (see Figure 7b.).

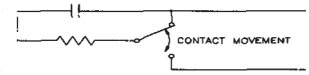

Figure 7b. Improper placement of resistor for power switching

But when the relay was used to discharge the capacitor, an arc occurred as the plus side of the load was interrupted, and an arc with full power system potential followed the moving contact to the minus side of the power source, thereby causing a short. To remedy the problem, the resistor was removed from the moving contact, and resistors were installed on both the plus and minus sides of the power source (see Figure 7c).

This reduced the current, and therefore eliminated the arc fault during contact transfer. TE tests all of our hot switching relays with the positive polarity on the common contact, unless otherwise requested. The application above, and others that may involve switching between two power sources, require special testing to confirm a workable circuit design.

Figure 7c. Proper placement of resistor for power switching

270 Vdc Aerospace Relays, and Contactors

With the need for more power, less weight and the desire to eliminate unreliable hydraulic systems, next generation military aircraft, ground, and sea vehicles have moved to 270 Vdc as the primary power. One of the reasons it has taken so long for 270Vdc to be used in these systems is that there were no relays or circuit breakers that could handle this new higher dc voltage. We have solved this problem.

Since 1987, TE has invested substantial time and effort in developing products that can switch direct current 270Vdc loads. Today TE has the largest selection of aerospace products available for these applications with load ratings from milliamps to 350A, continuous current carry to 800A, and overload rating to 3000A. These relays and contactors an be used at voltages ranging from 28 to 400Vdc. These ratings have been extrapolated and plotted onto graphs which are shown on the individual product data sheets.

In addition, we have the resources necessary to work directly with you in developing a new product or modifying an existing product to meet your specific application's requirements. TE recommends that you contact your local sales engineer for specific rating information-for higher voltage applications.

Catalog 5-1773450-5
Revised 3-13

www.te.com

Dimensions are shown for reference purposes only. Specifications subject to change.

Dimensions are in millimeters unless otherwise specified.

USA: +1 800 522 6752
Asia Pacific: +86 0 400 820 6015
UK: +44 800 267 666

For additional support numbers please visit www.te.com

Power Switching Applications (Continued)

Figure 8. Recommended Relays for D.C. Power Switching Aerospace Applications

Part Number	Contact Form	Load Rating @ 270 Vdc	Continuous Current Carry	Overload Rating @ 270 Vdc	See Page
AP5 Series AP10 Series	A,B,C,P,R A,B,P	5 A 10 A	15 A 15 A	20 A 20 A	7-51 – 7-53 7-51 – 7-53
AP44P	P	15 A	45 A	60 A	7-54
MAP 100 CAP100 EV100 LEV100	X	50 A	50 A	200 A	7-8, 7-9 7-18 – 7-20 7-27, 7-28 7-29 – 7-31
MAP200 CAP200 EV200 LEV200	X	up to 350 A	500 A	1500 A	7-10, 7-11 7-16, 7-17 7-21 – 7-26 7-32, 7-33

*SPST-NO, latching version available, contact TE for more information.

270 Vdc Aerospace Relay and Contactor Reliability

In order to allow customers to select the desired failure rate for TE's power switching devices, and determine the appropriate life rating and vice-versa, TE has created a series of curves showing the failure rate vs rated life. These curves have been generated using the results from Weibull analysis. The use of the Weibull distribution to predict product reliability from life test data has been shown to be an accurate and effective method when applied to TE' electromechanical devices. As an example, the following graph shows the hot switch life estimate for EV200 contactors:

Failure Rate vs. Rated Resistive Load Life at 90 A, 270 Vdc

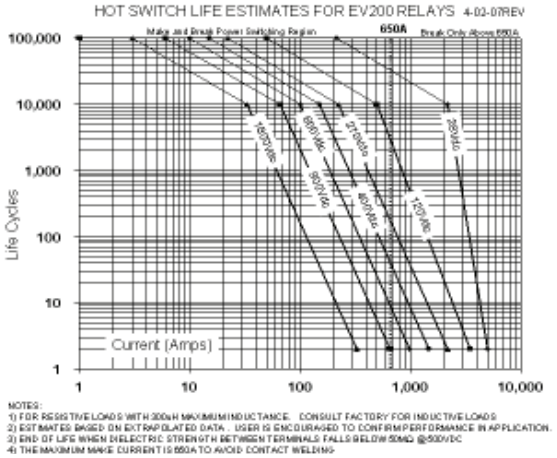

*Failure rate letter designations per MIL-STD-690

Contact TE for more information on the following:

- Reliability data for other 270 Vdc KILOVAC contactors and relays.
- Methodology using Weibull analysis; ask for TE Engineering Report No.415, "Determination of Failure Rate Curve from Weibull Data".
- Correlation between Weibull analysis and traditional reliability methods; ask for TE Paper "Correlation Between Weibull Analysis and Traditional Reliability Methods".

270 Vdc Aerospace Remote Power Controllers (RPCs)

The TE high voltage DC power contactors can be coupled with our custom designed CED1034 electronic control circuit to provide the remote power controller function. The controller performs the circuit protection function by monitoring the load current via a low resistance, precision temperature compensated resistor. An overload has priority over all control functions. The trip characteristic graphically illustrates the typical trip envelope with trip time as a function of overload current. The trip envelope can be tailored to meet specific customer requirements.

Test Equipment for Hartman Relays and Contactors

VIBRATION TEST EQUIPMENT

Vibration Control:
Spectral Dynamics PUMA Vibration Control System; Auto/Manual operation; Sine, 1 – 5000Hz; Random, 50 – 20,000Hz; Shock Pulse: half-sine, sawtooth, trapezoidal, rectangular; Accuracy: ± 1 dB (with 120 Dof), calibration frequency: 6 months.

Power Amplifier:
Unholtz-Dickie, model: TA-115, range: 16 KVA output power, calibration frequency: 6 months.

Shaker:
Unholtz-Dickie, model: TC-205, 4,000 lbs. pk. force sine 3,300 lbs. force RDM 1 inch pk. stroke, frequency range 5-3,000 Hz.

Slip Table:
Mitron.

Charge Amplifier:
Unholtz-Dickie, model: D22PMJO, range: 1/10/100 mv/pk.g., 0-10 kHz., 0 to 1,000 g, accuracy: ± 2%, calibration frequency: 6 months, P/N- SN5103

CHAMBERS

Temperature Chamber:
Thermotron, model S-1.2, range –73°C to +175°C (3 units)

Temperature/Altitude Chamber:
Envirotronics, Model EA27-2-5-WC, temperature range: -68°C to +177°C ± 1.1°C, altitude range 0 – 100,000 feet.

Temperature Chamber:
Envirotronics, Model EVS 37-2-30, range -73°C to +177°C accuracy ± 1.0°C, calibration frequency 6 months; capable of 30°C/minute maximum change rate.

Humidity/Temperature Chamber
Thermotron Model SM 5.5C range –68°C to 177°C ±1.1°C, relative humidity 20% to 95%, ±2.5%RH

GENERATORS

AC Generator:
Ideal, 300 KVA, 3 phase, 4 wire, 400 Hz., 208/120 volts. 415/240 – 450/260 volts

AC Generator:
Kato Engineering, 30 KVA, 3 phase, 4 wire, 400 Hz., 208/120 volts.

Other Capabilities:
Voltage, Current and Power Sensing
Over and Reverse Current
Over and Under Voltage
Over and Under Frequency
Ground Fault and Detection
Phase Sequence, Unbalance and Failure
Positive, Negative and Zero Sequence Voltage
Impedance Relays
Ripple Detection
Signal Amplification
Time Delay
Turbine Starting
Trip-Free, Electrical and Mechanical Interlocking
Electrical and Magnetic Latching
Polarization
Power Switching

Catalog 5-1773450-5
Revised 3-13

www.te.com

Dimensions are shown for reference purposes only. Specifications subject to change.

Dimensions are in millimeters unless otherwise specified.

USA: +1 800 522 6752
Asia Pacific: +86 0 400 820 6015
UK: +44 800 267 666

For additional support numbers please visit www.te.com

Typical KILOVAC Relay Applications

Predicting Reliability by Weibull Plotting

TE uses Weibull plotting to predict product reliability. Weibull plotting is a simple and efficient way to predict reliability from a small number of life tests and it is widely used for this purpose. At least five and preferably seven or more samples are tested to failure. The cumulative percent failure is plotted against life on Weibull paper. The scales of Weibull paper are designed so the failure data of a wide variety of manufactured devices will tend to lie in a straight line. As the chart above shows, this data can then be interpreted to estimate the likelihood of failure at a given life. If you would like more information on this valuable technique, contact TE and request “Weibull Plotting,” TE Engineering Report #219.

PC Board Mount Relays

TE’ K81 series of relays offer designers the flexibility of printed circuit board mounting. High voltage relay connections are directly on the board or to high voltage flying leads. With a new rating of 10 kV and capable of carrying 10 amps ,the K81 series can serve a wide range of high voltage applications. Failsafe, latching, and SPDT versions are available and we will be happy to provide special terminations on request.

Figure 9 shows the predicted life of K81 series relays making and breaking a resistive load. Since circuit conditions vary widely, this information should be considered a general guide only. Please contact your TE sales engineer with your design requirements.

Figure 9. Typical Hot Switching Resistive Load-in Characteristics K41A, K43A, K81A Relays

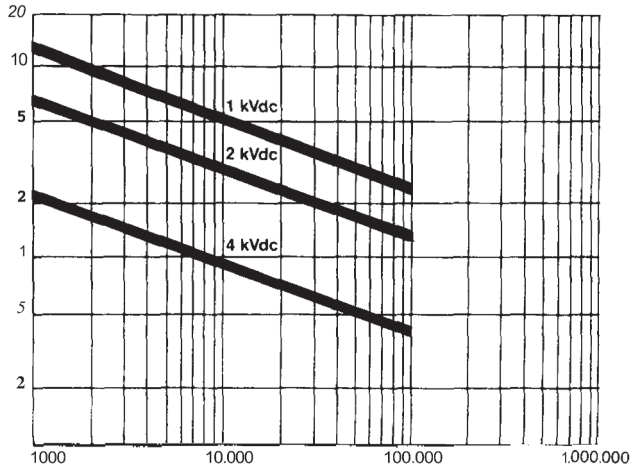

Note: Life expectancy for SPDT relays is lower due to contact bounce

Typical KILOVAC Relay Applications (Continued)

Test Equipment Applications

Test equipment applications, by their very nature, tend to impose difficult requirements on relays. The overall criterion is for reliable, repeatable, and consistent results. Without this, no piece of test equipment can be considered usable.

TE relays have some special characteristics which contribute to their wide application in test equipment.

1. The relay contacts are in a controlled environment. Dust, humidity, or infrequent use will not affect the relay's performance.
2. KILOVAC vacuum relays have extremely low and stable contact resistance since oxides cannot form on the contacts. Even when load switching, contact resistance will vary within a very narrow range.
3. Since they are designed for high voltage isolation, KILOVAC relays offer extremely high insulation resistance and very low current leakage. This is an advantage in many switching matrices where these values must be kept as low and repeatable as possible.

TE high voltage relays are used in many in-house test equipment applications as well as OEM applications. For example:

- Hipot Testing
- Test Sets
- Motor/Generator Test Sets
- Cable Testing
- Capacitor Testing
- Electrostatic Discharge (ESD) Testing
- Relay Test Equipment
- Power Supply Test Equipment

High Insulation Resistance Applications

Both vacuum and gas-filled relays are often used in applications, particularly test equipment, which require very high insulation resistance due to the sensitivity of the measurements being conducted. Standard KILOVAC relays often have sufficiently high insulation resistance for many applications and other KILOVAC relays can be modified to meet special insulation resistance requirements upon request. The chart below shows the typical insulation resistance of standard KILOVAC relays. If you have an application that requires a high insulation resistance relay, call TE at the numbers listed below and tell us of your requirement.

Figure 10. Recommended Relays for High Insulation Resistance Applications

Part Number	Rated Voltage	Contact Form	Contact to Case Insulation Resistance*		Contact to Contact Insulation Resistance*	
			@ 1000 Volts	@ Rated Voltage	@ 1000 Volts	@ Rated Voltage
HC-1 Series	3.5 kV	C	9.5×10^{13}	1.5×10^{12}	2.5×10^{13}	3.6×10^{13}
K41 Series	5.0 kV	A,B,C,P,R	2.4×10^{13}	3.2×10^{13}	7.0×10^{12}	7.5×10^{12}
K44 Series	8.0 kV	P	1.4×10^{14}	1.6×10^{13}	3.3×10^{13}	3.8×10^{13}
K43 Series	10.0 kV	A,B,C,P,R	2.4×10^{13}	4.4×10^{13}	9.0×10^{12}	1.5×10^{11}
K81 Series	10.0 kV	A,B,C	N/A	N/A	5.7×10^{13}	7.0×10^{13}
KC-2 Series	15.0 kV	C	3.1×10^{13}	3.5×10^{12}	3.8×10^{14}	5.8×10^{13}

* Typical values; measured In ohms

Note: Measurement of insulation resistance requires strict control of the test environment. Contact TE for more information.

Typical KILOVAC Relay Applications (Continued)

Relays with Special Modifications and Power Distribution Units

TE routinely develops KILOVAC relays with special modifications for customers. These modifications can include:

- contact arrangement
- operating voltage
- pickup or dropout voltage
- operate time
- mounting style or method
- coil voltage
- high voltage terminations
- coil terminations
- markings

Customized Lightweight Power Distribution Units

- For primary and secondary power distribution
- Modular systems consist of various plug-in and bus bar line-replaceable modules (LRMs) installed on a panel mounting system or backplane
- LRMs may be contactors, circuit breakers, sensing units, ELCUs, etc.
- Backplanes, designed as a fault-free zone with no moving parts, are intended as a permanent installation on the mother vehicle
- Optional current/voltage sensing, fuses, circuit breakers, power monitors, etc.
- Weight-saving and space-saving designs reduce OEM labor requirements and easy maintenance
- Optional integration of generator control units and logic control units

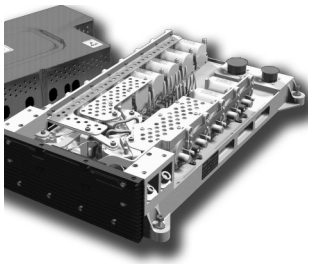

PDU featuring bus bar mount 270 Vdc DC contactors.

In addition, TE can take a standard relay or several relays and package them to your specifications. By packaging components and subassemblies with the relays, as demonstrated in Figure 16, the handling and installation of the product during manufacturing and field service can be greatly simplified. In this case, four high frequency inductive filters and special quick-connect cable assemblies of the correct length have been assembled with the relay. Then the whole assembly has been encapsulated for ease of handling and mounting.

Contact the TE sales engineer in your area to review your special requirements and establish a special part number which identifies your relay's unique characteristics.

Relay Application Notes

A number of modifications can be made to KILOVAC relays so they will operate faster than the catalog specifications, consume less power, and function reliably at elevated temperatures. In addition, high voltage relay users should be familiar with high voltage processing techniques, high voltage connectors available by special order, and when to be concerned about radiation exposure. The following chapter covers these topics, and more.

Improving Relay Operate Time

There are a number of methods which can be used to substantially improve relay operate time over the standard specification. Operate times of one millisecond or less can sometimes be achieved.

Our definition of operate time is “the interval between the application of the nominal coil voltage and closing of all normally open contacts (or opening of all normally closed contacts).” This includes:

1. Time for the coil to build up the magnetic field.
2. Transfer time of the moveable contact.
3. Bounce time after the initial make or break.

Operate time is basically a function of the coil power and inductance. More than half of the switching time is necessary simply to build up the coil field, thus; the basic scheme for reducing operate time is to apply more voltage to the coil. This can be accomplished by overdriving the coil with a higher than nominal voltage directly from your supply. To prevent overheating, the coil voltage should be reduced to the nominal value shortly after the relay operates or a resistor equal to or greater in value than the coil resistance should be placed in series with the coil to keep total power applied at the specified level (See Figure 11). Doubling the nominal voltage and adding an external resistor equal to the coil resistance can reduce the operate time up to roughly 40%.

Figure 11. Over Voltage Method of Reducing Operate Time

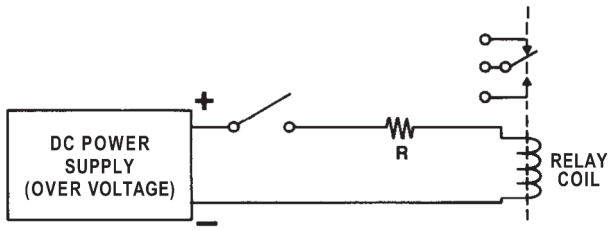

Figure 12. Recommended Relays for Fast Switching Applications

Part Number	Rated Voltage	Contact Form	Operate Time Specifications (Typical Time)*	Operate Time with “Hot Shot” Circuit*	See Page
HC-1, HC-3	3.5 kV	C	6 (2.5)	2.0	7-58
K41P	5.0 kV	P	6 (2.7)	2.3	7-60
K40P	5.0 kV	P	1 (0.75)	0.6	7-61
K44P	8.0 kV	P	5 (2.5)	2.2	7-66
HC-2, 4, 6	8.0 kV	C	6 (2.5)	2.0	7-64
K43P	10.0 kV	P	5 (3.0)	2.9	7-70

*Time is in milliseconds.

Catalog 5-1773450-5
Revised 3-13

www.te.com

Dimensions are shown for reference purposes only. Specifications subject to change.

Dimensions are in millimeters unless otherwise specified.

USA: +1 800 522 6752
Asia Pacific: +86 0 400 820 6015
UK: +44 800 267 666

For additional support numbers please visit www.te.com

Relay Application Notes (Continued)

Calculating Pull-in and Drop-out Voltages at High or Low Temperatures

Most of our specifications are for a 25°C ambient temperature. However, a well known phenomena of electrical circuits is the rise in resistance of a current path as temperature is increased. The temperature rise may be caused by current flow or by changes in ambient temperature, but the effect in either case is increased resistance. Therefore, you can expect coil resistance, pull-in, and drop-out values to change over the operating temperature range of the relay.

Figure 13. Change in Pull-In Voltage Over Temperature

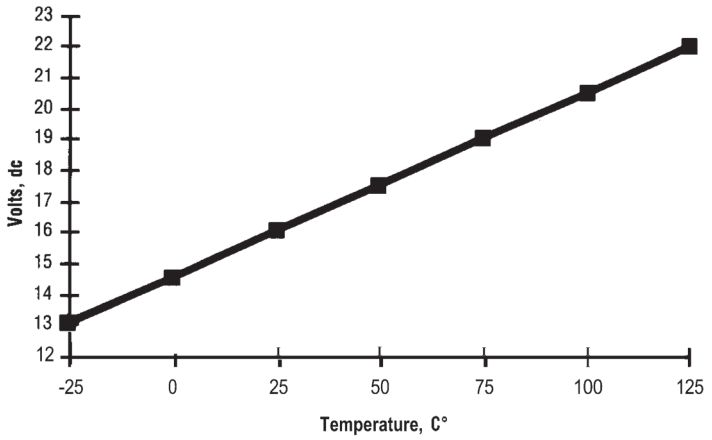

The coil resistance (R_t) after a specific temperature rise (ΔT) is calculated using the formula:

$$R_t = R_{25°C} (1+.003853\ \Delta T)$$

where:

R_t = New resistance at elevated temperature

$R_{25°C}$ = Coil resistance at room temperature (25°C)

ΔT = Rise in temperature from 25°C

Pick-up voltage varies directly with the change in coil resistance caused by a change in temperature. The basis for this is Ohms Law:

$$E/I = R$$

Since a relay coil is a current-driven device, as the coil resistance varies with temperature, so must the pick-up voltage (I=V/R). Thus, the same formula we used above to calculate the change in resistance with a change in temperature can be used to calculate pick-up voltage by substituting pick-up voltage for resistance. For example, assume that you have selected a relay that has a maximum pick-up voltage of 16 Vdc at 25°C, a standard value for a relay with a 26.5 Vdc coil, and you want to operate it in a 85°C environment. Using the formula, we find:

$$V_t = 16\ \text{Vdc}\ (1+.003853 \times 60°C) = 19.7\ \text{Vdc}$$

If the ambient temperature is raised to 100°C, the new pick-up voltage will be:

$$V_t = 16\ \text{Vdc}\ (1+.003853 \times 75) = 20.6\ \text{Vdc}$$

If the power supply you are using is rated at 20 Vdc, the relay would operate in an 85°C environment but not in a 100°C environment.

This same formula works for a decrease in temperature. For instance, at -25°C the pick-up voltage will drop to 12.9 Vdc, as follows:

$$V_t = 16\ \text{Vdc}\ (1 + .003853 \times -50) = 12.9\ \text{Vdc}$$

If you want your circuit to operate properly over its entire temperature range, it is essential that you make the necessary calculations to ensure that the available voltage exceeds the temperature-adjusted relay specification.

Catalog 5-1773450-5
Revised 3-13

www.te.com

Dimensions are shown for reference purposes only. Specifications subject to change.

Dimensions are in millimeters unless otherwise specified.

USA: +1 800 522 6752
Asia Pacific: +86 0 400 820 6015
UK: +44 800 267 666

For additional support numbers please visit www.te.com

Relay Application Notes (Continued)

Suppressing Relay Coil Transients

When a 28 Vdc relay coil is turned off, the inductive energy stored in it can create surge voltages to 1500 volts on a DC power line. With the increased use of solid state devices which are sensitive to spikes, relay coils must be suppressed to limit voltage spikes to a maximum of 50 to 80 volts.

The measure of successful coil suppression depends on the degree to which the method affects the operation of the relay. Improper or excessive suppression can cause the relay to suffer from a long release time, slow contact transfer, and contact bounce on break. All of these conditions will increase contact arcing when load switching, which will reduce relay life dramatically.

There are a number of common ways for a relay user to suppress relay coil transients and each has advantages and disadvantages. However, the most widely used methods utilize zener-diode and/or zener-zener combinations. These combinations are compact, provide excellent suppression, and do not affect relay release-time or contact life. Figure 14 illustrates some of the more common configurations.

Figure 14. Comparison of Relay Coil Transient-Suppression Methods

	Suppression Device	Increase Over Standard Cost	Space Problem	Polarization Requirement	Possible Temperature Problems	Line-Surge Sensitive	Effect on Release Transfer Time & Bounce Before Complete Break	Effect on Relay Power	Relay Life Reduction
	Bifilar Coil	Great	Great	No	None	No	Considerable	Considerable Reduction	Considerable
	Resistor	Minor	Reasonable	No	Yes	No	Considerable	None	Considerable
	Varistor	Minor	Reasonable	No	None	No	Minor	None	Minor
	Resistor Capacitor	Reasonable	Great	No	Yes	No	Considerable	None	Considerable
	Diode	Minor	Minor	Yes	Yes	Yes	Excessive	None	Excessive
	Zener-Diode	Reasonable	Minor	Yes	Yes	Yes	Negligible	None	Negligible
	Zener-Zener*	**Reasonable**	**Minor**	**No**	**Yes**	**Yes**	**Negligible**	**None**	**Negligible**

*Recommended Method

Radiation Exposure at High Voltage; Is it A Problem?

High voltage vacuum relays, like any high voltage component, can potentially produce hazardous X-rays when operated above 15 kV. However, KILOVAC gas-filled high voltage relays can be operated safely at very high voltages without any concern for X-rays. Gas-filled relays cannot produce X-rays because the electrons collide with the gas molecules and are unable to accumulate sufficient energy to make significant radiation.

Many KILOVAC relays rated for use above 15 kV are gas-filled relays and, whenever possible, we recommend you use one of these. If a vacuum relay must be used, then it, or the equipment it's in, should be shielded with lead which is at least .062 inches thick. If shielding is not possible, then appropriate warnings of the potential for X-ray exposure must be posted and a radiation monitoring program implemented. Contact your local health agency for more information.

Relay Application Notes (Continued)

Power Conservation Schemes

Quite often in space, aircraft, or battery operated applications it is important to minimize relay power consumption either to conserve power or to minimize heating. TE offers three ways to help you reduce the power which must be dedicated to supply the relays.

1. Use a latching relay. Latching relays need only to be pulsed to switch. Power can be removed and the relay will maintain its latched position. If a normally open or normally closed relay must be used, TE has developed a custom hybrid circuit which allows a latching relay to function as a non-latching relay.
2. If a latching relay is not available for your application, TE may be able to incorporate an "energy conserving" circuit in your relay package. This circuit regulates the power provided to the coil, providing full power during relay operation and providing a reduced power level which is adequate for holding the relay contacts in position at other times. An energy conserving circuit such as this must be custom designed for each application and each model relay. Contact the your local TE sales engineer for more information.
3. For failsafe contactors, TE offers electronic economizers for reducing coil power once the contacts are closed. These schemes result in more energetic activation, smaller size contactors, and substantially reduced coil temperature rise.

High Voltage Processing of Vacuum Relays

Although the shelf life of vacuum relays is typically many years, occasionally a relay will show signs of "gassiness" after a relatively short period of non-use. A trace of gas released from its adsorbed state on the internal surface of the relay is usually responsible. Fortunately, this trace can normally be eliminated by the use of the high voltage processing procedure de-scribed below. The need for such processing can be readily determined by a simple, high voltage test just before installing the component in a system, which is good practice for any high voltage component. **It is not necessary to high voltage process gas-filled relays.**

High Voltage Process Procedure

1. Connect a variable high voltage AC or DC power supply in series with a 10 megohm resister, a micrometer, and the relay (with the relay on the ground side of the power supply).

   SPST-NO relay: Process between open contacts.

   SPST-NC relay: Ground the base, energize the coil, and process between open contacts.

   SPDT relay: Connect the base and the NO terminal together, ground the base, and process between open contacts with the coil energized and de-energized.

   DPDT relay: Process each set of contacts in the same manner suggested for a SPDT relay.
2. Immerse the relay in a dielectric fluid for processing. Transformer oil can be used but FLUORINERT FC-77 is cleaner since it evaporates quickly from the relay surface.
3. Raise the voltage slowly. If the peak voltage is made equal to the maximum specified test voltage and less than 5 microamps of current is drawn at this level (or no glow is visible in a darkened room), then the vacuum is "hard" and no further processing is necessary.
4. If a glow occurs at a lower than maximum specified test voltage, hold the voltage just above the glow initiation level until the glow disappears; raise the voltage again to the onset of glow, or until the maximum specified test voltage is reached. If a DC supply is used, reverse the polarity and repeat the process.
5. Processing at levels up to 20% above the maximum specified test voltage may be done. Typical processing times range from one minute to several minutes for very high voltage relays.

WARNING: X-rays are produced during high voltage processing at voltages above 15 kV. See page 16-15 in this catalog for information on the precautions you should take when operating vacuum relays above 15 kV.

FLUORINERT is a trademark of 3M.

Common KILOVAC High Voltage Relay Designs

Hinged Armature Design

This traditional design approach provides high mechanical reliability and is adaptable to a number of contact configurations. The contact is actuated by the movement of the spring-loaded armature when the coil is energized. The coil assembly is external to the vacuum package and readily replaceable.

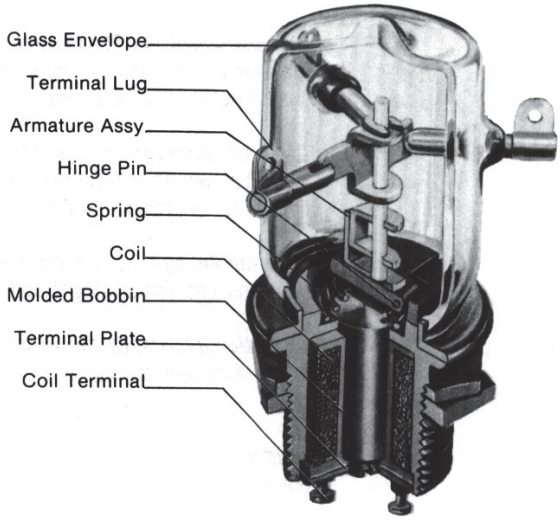

Diaphragm Design

This simple, low-cost design approach makes use of a thin molybdenum diaphragm which allows contact movement to be transferred into the vacuum package from the external motor assembly. This basic design is used in a large number of Kilovac products.

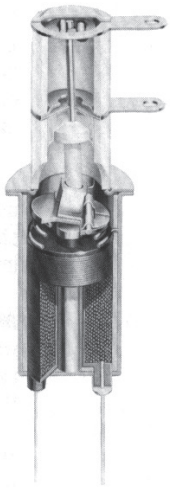

Solenoid Design

When high current loads must be interrupted, the solenoid design provides the force necessary to separate large contacts quickly. It also provides high contact holding force to keep contact resistance low. These attributes make this design the choice for high current DC load switching relays and contactors.

Our Patented Relay Design

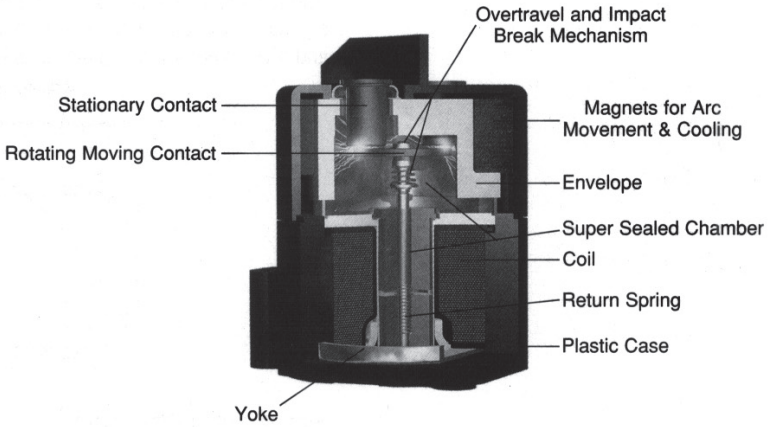

Catalog 5-1773450-5
Revised 3-13

www.te.com

Dimensions are shown for reference purposes only. Specifications subject to change.

Dimensions are in millimeters unless otherwise specified.

USA: +1 800 522 6752
Asia Pacific: +86 0 400 820 6015
UK: +44 800 267 666

For additional support numbers please visit www.te.com

Definition of Specifications

Bounce Time
The time interval between when the contact first makes, and when the last contact make occurs.

Coil Hi Pot
The minimum voltage which the relay coil terminals will isolate when the relay is properly mounted.

Coil Resistance
The DC resistance, in ohms, of the coil at 25˚C.

Contact Arrangement
Contact arrangements of relays may be one or a combination of the following:

single pole single throw (SPST)
single pole double throw (SPDT)
double pole single throw (DPST)
double pole double throw (DPDT)
3 pole single throw (3PST)
3 pole double throw (3PDT)
four pole double throw (4PDT)

Contact Capacitance
Contact capacitance is measured either between open contacts or between contacts and ground. Measurements are made per MIL-STD-202, Method 305, at 1 kHz.

Contact Form
The contact form of relays may be one or a combination of the following (see page 16-20):

Form A: SPST - Normally Open
Form 3A: 3PST - Normally Open
Form B: SPST - Normally Closed
Form C: SPDT
Form 2C: DPDT
Form 3C: 3PDT
Form 4C: 4PDT
Form K: SPDT Center Off
Form P: SPST - Latching
Form R: SPDT - Latching
Form 3R: 3PDT - Latching
Form X: SPST-NO-Double Make
Form Y: SPST-NC-Double Break
Form Z: SPST NO and SPST NC Double Break/Make
Form ZZ: DPST NO and DPST NC Double Break/Make

Contact Resistance
In vacuum relays, the resistance of closed contacts is measured as voltage drop across contacts carrying 1 amp at 6 Vdc. Measurement is made in accordance with MIL-R-83725, SAE ARD 50031, or MIL-R-6016. In gas-filled relays, 1 amp at 28 Vdc is used to measure contact resistance. “Kelvin” connections should be used to obtain accurate readings.

Contact Voltage Drop
Contact voltage drop is typically measured with the contacts carrying rated current. Measurements are made at the external terminals of the circuit being tested.

Continuous Current
The maximum current that can be carried by the closed contacts of the relay for a sustained time period through the specified operating temperature range.

Dielectric Strength
The maximum allowable Ac rms voltage (50 or 60 Hz) which may be applied between two test points, such as the coil and case or current carrying and non-current carrying points, without a leakage current in excess of 1 milliamp.

Drop-out Voltage
The voltage at which all contacts return to their “normal”, unoperated positions. (Applicable only to non-latching relays.) Unless otherwise noted, maximum drop-out voltage is specified during a continuous current test with a hot coil at maximum temperature. Minimum drop-out voltage is done at minimum temperature.

Insulation Resistance
The minimum allowable DC resistance between two test points, such as the relay contacts and the coil, or contacts and case at a specified voltage, usually 500 Vdc.

Hold Voltage
The lowest voltage that can be applied without any change in state of the contacts from their energized position. This is just above the maximum drop-out voltage.

Leakage Current
The rms current conducted by the output circuit of the relay at maximum rated voltage with the contacts open.

Load Life
The minimum number of cycles the relay will make, carry, and break the specified load without contact sticking or welding, and without exceeding the electrical specifications of the device. Load life is verified through qualification testing.

Load Life, Rated Resistive
The voltage and current encountered by the contacts when opening and/or closing. To be considered a resistive load, the inductance in the test circuit shall not exceed an L/R ratio of 1×10^{-4}. Load ratings are established using various methods including Weibull analysis.

Mechanical Life
This is the number of operations which a relay can be expected to perform while maintaining mechanical integrity. Mechanical life is normally tested with no load or voltage applied to the power contacts and is verified through qualification testing.

Catalog 5-1773450-5
Revised 3-13

www.te.com

Dimensions are shown for reference purposes only. Specifications subject to change.

Dimensions are in millimeters unless otherwise specified.

USA: +1 800 522 6752
Asia Pacific: +86 0 400 820 6015
UK: +44 800 267 666

For additional support numbers please visit www.te.com

Definition of Specifications (Continued)

Operating Temperature Range
The ambient temperature range over which an unmounted relay is specified to operate.

Operate Time
The time interval between the coil energization (nominal coil voltage) and the closing of the normally open contacts. This includes time for the coil to build up its magnetic field (a significant limiting factor) and transfer time of the moveable contact between stationary contact(s), and bounce time after the initial contact make. All KILOVAC relays, except “AP” and “PD” power switching products include bounce time.

Graphic Representation of Operate Time

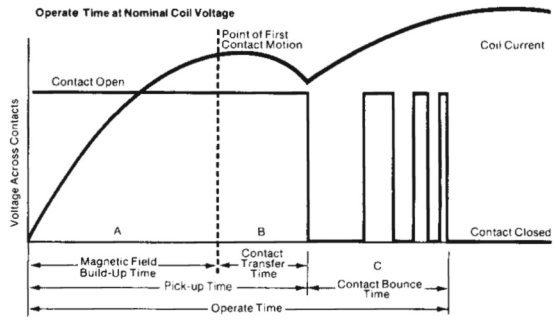

Overload
The maximum current the relay can make and break for the specified number of operations at the maximum system voltage without contact welding, sticking, or blowing of a 1 amp fuse connected between the case and load system ground.

Pick-Up Voltage
The voltage at which normally open contacts close and/or normally closed contacts open. Pick-up voltage increases as coil temperature rises. Unless otherwise specified, pick-up voltage is specified during a continuous current test with a hot coil at maximum temperature.

Release Time
The time interval between de-energizing of the coil and the relay returning to normal de-energized position.

Shock
Shock tests determine what acceleration a relay can sustain without normally closed contacts opening or normally open contacts closing. The shock pulse is typically an 11 millisecond, 1/2 sine pulse. Contacts are monitored for chatter in excess of 10 microseconds and no transfer.

Vibration
The maximum acceleration over the frequency range which the relay can withstand without impairing operation or causing contact chatter of more than 10 microseconds or contact transfer.

Catalog 5-1773450-5
Revised 3-13

www.te.com

Dimensions are shown for reference purposes only. Specifications subject to change.

Dimensions are in millimeters unless otherwise specified.

USA: +1 800 522 6752
Asia Pacific: +86 0 400 820 6015
UK: +44 800 267 666

For additional support numbers please visit www.te.com

Contact Configurations

Form A	Form 3A	Form B	Form C	Form 2C
SPST-NO (make)	3PST-NO	SPST-NC (break)	SPDT (break-make)	DPDT (break-make)
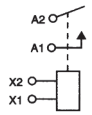		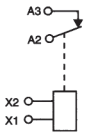	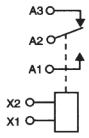	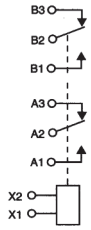

Form 3C	Form 4C	Form K	Form P	Form R
3PDT	4PDT (break-make)	SPDT-CO	SPST-Latching	SPDT-Latching
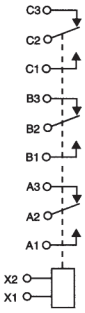	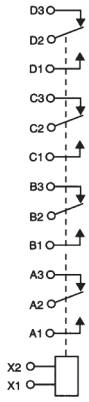	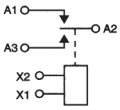	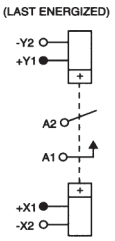	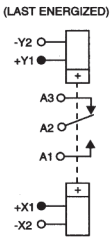

Form 3R	Form X	Form Y	Form Z	Form ZZ
3PDT-Latching	SPST-NO (double-make)	SPST-NC (double-break)	SPST-NO & SPST-NC (double-break/make)	DPST-NO & DPST-NC (double-break/make)
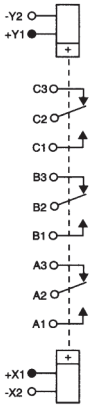	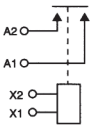	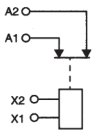	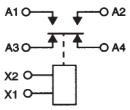	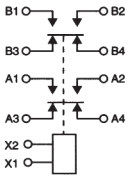

Catalog 5-1773450-5
Revised 3-13

www.te.com

Dimensions are shown for reference purposes only. Specifications subject to change.

Dimensions are in millimeters unless otherwise specified.

USA: +1 800 522 6752
Asia Pacific: +86 0 400 820 6015
UK: +44 800 267 666

For additional support numbers please visit www.te.com

Part Number Index

Part No.	Page
07	1-71
1001	11-21
1002	11-21
1003	11-21
1004	11-21
1005	11-21
1006	11-21
1007	11-21
1012	11-21
1013	11-21
1310	9-2
1350	9-3
1400	9-4, 9-5
1600	8-2, 8-3
1700	8-2, 8-3
1800	8-7
1900	8-7
2400	8-4
2600	8-9
4600	8-10, 8-11
4700	8-10, 8-11
4800	8-12
5600	8-5, 8-6
5700	8-5, 8-6
6001	8-8
7000	9-6
1000 Series	11-21
1616002-5	6-23
1616004-5	6-43
1616004-7	6-40
1616008-4	6-21
1616008-6	6-21
1616015-1	6-31
1616017-4	6-31
1616018-1	6-15
1616023-1	6-49
1616023-2	6-49
1616023-3	6-38
1616023-4	6-51
1616023-5	6-51
1616026-2	6-69
1616028-1	6-23
1616028-2	6-23
1616028-3	6-23
1616034-2	6-36
1616034-3	6-29
1616037-1	6-8
1616037-2	6-8
1616037-8	6-26
1616043-7	6-25
1616043-9	6-25
1616044-5	6-44
1616048-1	6-18
1616058-1	6-104
1616048-2	6-18
1616048-3	6-18

Part No.	Page
1616048-4	6-18
1616049-1	6-32
1616049-2	6-35
1616050-1	6-18
1616050-2	6-73
1616050-4	6-35
1616050-5	6-35
1616050-6	6-35
1616050-8	6-35
1616050-9	6-9
1616055-2	6-82
1616055-3	6-75
1616055-4	6-82
1616055-5	6-82
1616055-6	6-82
1616056-2	6-99
1616056-4	6-99
1616056-5	6-98
1616056-6	6-98
1616056-8	6-98
1616056-9	6-98
1616058-3	6-104
1616058-6	6-104
1616058-7	6-104
1616058-8	6-104
1616059-1	6-83
1616060-1	6-111
1616061-1	6-104
1616063-1	6-89
1616064-1	6-73
1616081-1	6-84
1616081-3	6-75
1616081-4	6-82
1616082-2	6-90
1616082-4	6-90
1616082-6	6-91
1616083-1	6-113
1616083-2	6-113
1616083-6	6-106
1616083-7	6-106
1616084-1	6-94
1616088-1	6-73
1616089-1	6-69
1616089-2	6-69
1616089-3	6-73
1616089-4	6-78
1616089-7	6-73
1616097-1	6-76
1616097-2	6-77
1616098-1	6-79
1616099-1	6-18
1616101-2	6-107
1616102-2	6-91
1616102-3	6-91
1616102-6	6-110
1616103-2	6-73

Part No.	Page
1616109-1	6-123
1616109-4	6-121
1616109-6	6-120
1616109-7	6-123
1616109-9	6-123
1616110-5	6-132
1616110-6	6-130
1616110-7	6-131
1616110-8	6-130
1616114-7	6-127
1616126-6	6-150
1616131-1	6-136
1616131-2	6-140
1616131-3	6-140
1616131-4	6-140
1616131-5	6-135
1616131-6	6-135
1616131-7	6-137
1616131-8	6-135
1616131-9	6-134
1616132-1	6-142
1616132-3	6-141
1616133-1	6-144
1616133-2	6-149
1616133-3	6-147
1616133-4	6-147
1616133-5	6-146
1616524-3	6-18
1616524-5	6-35
1616530-7	6-89
1616539-3	6-148
1616540-7	6-140
1616545-1	6-118
1616948-7	6-42
1618004-1	7-88
1618084-2	6-94
1-1616037-5	6-29
1-1616043-0	6-25
1-1616058-0	6-104
1-1616058-1	6-104
1-1616058-2	6-104
1-1616058-3	6-104
1-1616058-4	6-104
1-1616058-6	6-104
1-1616058-7	6-104
1-1616058-9	6-104
1-1616109-0	6-125
1-1616109-1	6-125
1-1616109-3	6-126
1-1616109-6	6-129
1-1616109-7	6-129
1-1616109-8	6-129
1-1616126-1	6-144
1-1616126-4	6-142
1-1616126-8	6-117
1-1616126-9	6-145

Part No.	Page
1-1616131-0	6-140
1-1616131-1	6-138
1-1616131-2	6-133
1-1616131-3	6-138
1-1616520-0	6-21
1-1616522-4	6-8
1-1616530-5	6-99
1-1616530-6	6-99
1-1616126-9	6-145
1-1616957-3	6-18
1-1616964-3	6-99
1-1616017-0	6-8
1-1616037-2	6-8
1-1616037-3	6-8
1-1616037-3	6-29
1-1616089-3	6-69
1800 Series	11-27
1MA	1-2, 1-3
1MAD	1-2, 1-3
1MADD	1-2, 1-3
1MAT	1-6, 1-7
1MS	1-4, 1-5
1MSD	1-4, 1-5
1MSDD	1-4, 1-5
1MST	1-8, 1-9
20-000 Series	11-30
20-050-19 Series	11-32
2100 Series	12-4, 12-5 12-6, 12-7
2-1616058-0	6-104
2-1616058-2	6-104
2-1616058-3	6-109
2-1616058-4	6-109
2-1616058-6	6-109
2-1616126-3	6-119
2-1616921-3	6-58 to 6-61
2-1616960-7	6-41
2-1616970-8	6-62 to 6-64
250 Series	11-17
25-000 Series	11-31
3-1616058-1	6-89
3-1616058-3	6-89
3-1616058-4	6-89
3-1616058-5	6-89
3-1616058-6	6-89
3-1616058-9	6-89
3-1618389-7	7-20, 7-31
3-1618391-7	7-20, 7-31
4-1616048-2	6-89
4-1616058-1	6-89
4-1616058-3	6-89
4-1616058-4	6-89
4-1616951-4	6-62 to 6-64
4-1616959-0	6-58 to 6-61
4-1616959-8	6-58 to 6-61
4-1616964-5	6-58 to 6-61

Catalog 5-1773450-5
Revised 3-13

www.te.com

Dimensions are shown for reference purposes only. Specifications subject to change.

Dimensions are in millimeters unless otherwise specified.

USA: +1 800 522 6752
Asia Pacific: +86 0 400 820 6015
UK: +44 800 267 666

For additional support numbers please visit www.te.com

Part Number Index (Continued)

Part No.	Page
4-1616968-7	6-55 to 6-57
4-1616966-1	6-65
4-1616968-7	6-55 to 6-57
4-1618391-0	7-20, 7-31
4-1618391-1	7-20, 7-31
4-1618391-2	7-20, 7-31
5-1616946-6	6-58 to 6-61
5-1616970-9	6-55 to 6-57
6-1616032-3	6-109
6-1616071-3	6-129
6-1616945-7	6-58 to 6-61
6-1616949-1	6-99
6-1616965-1	6-58 to 6-61
6-1616968-5	6-58 to 6-61
6-1616970-0	6-55 to 6-57
6-1616970-6	6-58 to 6-61
6-1616970-7	6-58 to 6-61
6-1616970-8	6-58 to 6-61
6-1616970-9	6-62 to 6-64
700 Series	11-20
7000 Series	12-8, 12-9, 12-10 12-11, 12-12, 12-13 12-14
7012AA	12-13
7012AB	12-13
7012AC	12-13
7012ACL	12-13
7012AD	12-13
7012AE	12-13
7012AF	12-13
7012AH	12-13
7012AK	12-13
7012BC	12-13
7012NC	12-13
7012PA	12-13
7012PB	12-13
7012PC	12-13
7012PD	12-13
7012PF	12-13
7012PJ	12-13
7012PJX	12-13
7012PK	12-13
7012PKX	12-13
7022AA	12-13
7022AB	12-13
7022AC	12-13
7022AD	12-13
7022AE	12-13
7022AF	12-13
7022AH	12-13
7022AI	12-13
7022AJ	12-13
7022AKT	12-13
7022BC	12-13
7022BK	12-13
7022PA	12-13

Part No.	Page
7022PB	12-13
7022PC	12-13
7022PK	12-13
710TD	11-20
7-1616927-0	6-62 to 6-64
7-1616941-3	6-58 to 6-61
7-1616970-0	6-62 to 6-64
720TD	11-20
721TD	11-20
722TD	11-20
723TD	11-20
724TF	11-20
730TD	11-20
8-1616968-4	6-58 to 6-61
900 Series	11-22
900-2X	11-22
900-3X	11-22
900X	11-22
901X	11-22
910X	11-22
9-1616965-0	6-62 to 6-64
9-1618389-8	7-31
9-1618389-8	7-20, 7-31
A1077	6-74, 6-75 6-80 to 6-82, 6-84
A-1077B	6-84
A-1077DD	6-75, 6-82
A-1077F	6-82
A-1077G	6-82
A-1077S	6-75
A-1077V	6-82
A-1077W	6-82
A-400	6-95 to 6-99
A-400A	6-99
A-400AA	6-99
A-400B	6-99
A-400D	6-99
A-400DB1	6-99
A-400DC	6-99
A-400G	6-99
A-400G2	6-99
A-400L	6-99
A-400S	6-99
A-700	6-120, 6-121, 6-122
A-700AAP	6-123
A-700AQ-4	6-121
A-700BU	6-120
A-700ZC-7	6-123
A-701	6-124, 6-125
A-701C	6-125
A-701D	6-125
A-702	6-126
A-702AAP	6-126
A-703	6-100 to 6-104
A-703B	6-104
A-703CD	6-104

Part No.	Page
A-703CSM	6-104
A-703D	6-104
A-703DBH	6-104
A-703E	6-104
A-703FA	6-104
A-703FB	6-104
A-703FSS	6-104
A-703G-1	6-104
A-703GC	6-104
A-703GS	6-104
A-703R	6-104
A-703T	6-104
A-703ZS	6-104
A-711	6-128, 6-129
A-711JF	6-129
A-711JM	6-129
A-711R	6-129
A-711Z	6-129
A-712	6-108, 6-109
A-712AB	6-109
A-712AF	6-109
A-712J	6-109
A-712W	6-109
A-770	6-85 to 6-89
A-770AM	6-89
A-770N	6-89
A-770RF	6-89
A-770RG	6-89
A-770RN	6-89
A-770RSS	6-89
A-770RV	6-89
A-770W	6-89
A-770WA-2	6-89
A-770WA-3	6-89
A-770WF	6-89
A-772	6-118
A-772XTB	6-118
A-792	6-107
A-792SFS	6-107
A-848	6-90, 6-91, 6-92
A-848KH	6-90
A848KH-2	6-90
A-848KLC	6-91
A-848MAS	6-91
A-848MLS	6-91
A876	6-83
A-876K	6-83
A-882	6-110
A-882DL	6-110
A-931F	6-111
A-931F	6-111
A-957	6-130, 6-131, 6-132
A-957CA	6-132
A-957CSD	6-130
A-957E	6-131
A-957G	6-130

Part No.	Page
A-981	6-105, 6-106
A-981	6-112 , 6-11
A-981E	6-113
A-981K	6-113
A-981P	6-106
A-981S	6-106
AC30	7-36
Aero Medical Valve Solenoid	13-5
AH-703	6-100 to 6-104
AH-703F	6-104
AH-965	6-93, 6-94
AH-965H	6-94
AH-965M	6-94
AP5A834	7-52
AP5C332	7-52
AP5C832	7-52
AP10	16-8
AP10A	7-51
AP10A334	7-52
AP10A335	7-53
AP10AB47	7-53
AP10AB57	7-53
AP10B	7-51
AP10P	7-51
AP11A	7-51
AP150X	7-39
AP265X	7-40
AP350X	7-41
AP44P	7-54, 16-8
AP5	16-8
AP5A	7-51
AP5B	7-51
AP5C	7-51
AP90X	7-37
AP90X	7-38
AR-770	6-85 to 6-89
AR-770W	6-89
B-138	6-22, 6-23
B-138BH	6-23
B-138S	6-23
B-138XAH	6-23
B-138XEH	6-23
B-140	6-24, 6-25
B-140AP-1	6-25
B-140BH	6-25
B-140V	6-25
B-188	6-127
B-188MA-1	6-127
B-312	6-39, 6-40, 6-43
B-312CV	6-43
B-312DB	6-40
B-393	6-44
B-393T	6-44
B-429	6-45, 6-46, 6-47
B-429-1	6-47

Part Number Index (Continued)

Part No.	Page
B-429CA	6-47
B-429W	6-47
B-430	6-48, 6-49
B-430-A	6-49
B-430Z	6-49
B-451	6-38
B-484	6-50, 6-51
B-484C	6-51
BH-316	6-19, 6-20, 6-21
BH-316A	6-21
BH-316C	6-21
BH-316D	6-21
C	1-70
CAP100 Series	7-18, 7-19 7-20, 16-2, 16-4
CAP200 Series	7-16, 7-17 16-2, 6-4
CAP202 Series	7-14, 7-15
CR0001	12-32
CR0002	12-32
CR0067	12-32
CR0069	12-32
CR0070	12-32
CR0111	12-32
CR0133	12-32
CR0155	12-32
CR0179	12-32
CR0190	12-32
Custom Solenoids Series	13-2 to 13-6
D100-3X	11-18
D100-4X	11-18
D100-5X	11-18
D100-6X	11-18
D100-7X	11-18
D100-8X	11-18
D100X Series	11-18
D101-10X	11-19
D101-4X	11-19
D101-6X	11-19
D101-7X	11-19
D101X Series	11-19
D18	6-16, 6-17, 6-18
D-180A	6-18
D-18AA	6-18
D-18F	6-18
D-18ZZC	6-18
D25	6-27, 6-28, 6-29 6-30, 6-31
D-25	6-36
D-25BAH	6-36
D-25BD	6-29
D-25CF	6-31
D-31	6-32, 6-32, 6-34 6-35, 6-76
D-31BAA	6-76
D-31C	6-32
D-31DB	6-35
D-31TH	6-35
D-32A	6-77
D7	6-10, 6-11, 6-12 6-13, 6-14, 6-15 6-70 to 6-73
D-7AC	6-73
D-7BS	6-15
D-7GR	6-15
D-7GR-2	6-15
D-7GR-3	6-15
D-7GRZ	6-15
D-7LHB	6-73
D-7M	6-15
D-7MA	6-15
D-7MM	6-15
DH-14	6-6, 6-7, 6-8 6-67 to 6-69
DH-14A	6-69
DH-14AL	6-69
DH-14AT	6-69
DH-14B	6-8
DH-14B-3	6-8
DH-14CE	6-8
DH18	6-16, 6-17, 6-18
DH-18	6-70 to 6-73
DH-18DA	6-73
DH-18Y	6-18
DH-21	6-67 to 6-69
DH-21N	6-69
DH25	6-27, 6-28, 6-29 6-30, 6-31
DH-25	6-78
DH-25B	6-29
DH-25BA	6-29
DH-25CU	6-31
DH-25EA	6-78
DH-31	6-33, 6-34, 6-35
DH-31A	6-35
DH-31DA	6-35
DH-31DAA	6-35
DH7	6-10, 6-11, 6-12 6-13, 6-14, 6-15 6-26, 6-70 to 6-73
DH-7ATK	6-73
DH-7BB	6-15
DH-7BC	6-26
DH-7GR	6-15
DH-7MN	6-73
DH-7N	6-15
DH-7TB	6-73
DH-7ZAB	6-15
DH-7ZG-1	6-15
DHL-31	6-33, 6-34, 6-35
DHL-31B	6-35
DHR-14	6-6, 6-7, 6-8
DHR-14B	6-8
DHR-14BA	6-8
DHR-178-1	6-9
DHR18	6-16, 6-17, 6-18
DHR-18	6-9
DHR25	6-27, 6-28, 6-29
DHR-25BG	6-29
DHR-31BA	6-79
DHR7	6-10, 6-11, 6-12 6-13, 6-14, 6-15
DHR-7B	6-15
DHR-7BE	6-15
DHR-7K	6-15
DHR-7M	6-15
DHR-7ZG	6-15
Directional Valve Solenoid	13-6
DR-18E-5	6-18
DR7	6-10, 6-11, 6-12 6-13, 6-14, 6-15
DR-7VC	6-15
DS11 Series	10-2, 10-3 10-4, 10-5
DS11-1000	10-2, 10-3 10-4, 10-5
DS11-1001	10-2, 10-3 10-4, 10-5
DS11-1002	10-2, 10-3 10-4, 10-5
DS11-1003	10-2, 10-3 10-4, 10-5
DS11-1Y	10-2, 10-3 10-4, 10-5
DS13 Series	10-6, 10-7 10-8, 10-9
DS13-1000	10-6, 10-7 10-8, 10-9
DS13-1001	10-6, 10-7 10-8, 10-9
DS13-1002	10-6, 10-7 10-8, 10-9
DS13-1Y	10-6, 10-7 10-8, 10-9
E-308TA	6-150
E-311PB	6-144
E-316C	6-143
E-328-2	6-117
E-329	6-145
E-329E	6-145
E-387	6-119
E-387C-1	6-119
E7000 Series	12-15, 12-16 12-17, 12-18 12-19, 12-20
EGP Series	12-21, 12-22 12-23, 12-24, 12-25 12-26, 12-27
EML Series	12-21, 12-22 12-23, 12-24, 12-25 12-26, 12-27
ETR Series	12-21, 12-22 12-23, 12-24, 12-25 12-26, 12-27
EV100 Series	7-27, 7-28, 16-2 16-4
EV200 Series	7-21, 16-2 16-4
EV200A Series	7-21, 7-22
EV200B Series	7-23, 7-24
EV200P Series	7-25, 7-26
EV250-1A	7-42, 7-43, 7-88
EV250-1B	7-42, 7-43, 7-88
EV250-2A	7-44, 7-45, 7-88
EV250-2B	7-44, 7-45, 7-88
EV250-5A	7-88
EV250-8A	7-88
EV250-8B	7-88
EV500	7-46, 7-47, 16-2
FCA-125 Series	5-21, 5-22 5-23
FCA-150 Series	5-30, 5-31 5-32, 5-33
FCA-150NC Series	5-34, 5-35 5-36, 5-37
FCA-210 Series	5-12, 5-13, 5-14
FCA-212 Series	5-15, 5-16 5-17
FCA-215 Series	5-12, 5-14
FCA-325 Series	5-24, 5-25 5-26
FCA-410 Series	5-18, 5-19, 5-20
FCA-412	5-15
FCA-415 Series	5-18, 5-20
FCAC-150 Series	5-38, 5-39 5-40, 5-41
FCAC-325 Series	5-27, 5-28 5-29
FCB-205 Series	5-6, 5-7, 5-8
FCB-405 Series	5-9, 5-10, 5-11
Fin Locking Solenoid	13-5
FM200	7-34, 7-35
Fuel Valve Solenoid	13-6
FW	1-68, 1-69
FW5A	1-68, 1-69
GP Series	12-28, 12-29, 12-30, 12-31, 12-32
H-14	7-71, 7-88, 7-89, 16-4
H-16	7-71, 7-88, 7-89, 16-4
H-17	7-77, 7-88, 7-89, 16-4
H-18	7-65, 7-89, 16-2, 16-4
H-19	7-77, 7-88 7-89, 16-2, 16-4
H-23	7-88
H-23/24	7-81, 16-4
H-24	7-88
H-25	7-85
H-26	7-76, 7-88, 7-89, 16-4
H-8	7-72, 7-88
HC	1-20, 1-21
HC-1	7-58, 16-2, 16-4, 16-11 16-13

Catalog 5-1773450-5
Revised 3-13

www.te.com

Dimensions are shown for reference purposes only. Specifications subject to change.

Dimensions are in millimeters unless otherwise specified.

USA: +1 800 522 6752
Asia Pacific: +86 0 400 820 6015
UK: +44 800 267 666

For additional support numbers please visit www.te.com

Part Number Index (Continued)

Part No.	Page
HC-2	7-64, 16-2, 16-11
HC-3	16-13
HC-4	16-11
HC-5	7-58, 16-2, 16-6
HC-6	7-64, 16-2, 16-6, 16-11
H-26	16-2
HCD	1-20, 1-21
HCS	1-20, 1-21
HCSD	1-20, 1-21
HFC	1-40, 1-41
HFC4A	1-67
HFC5A	1-67
HFW	1-36, 1-37
HFW4A	1-65, 1-66
HFW5A	1-65, 1-66
High Reliability Space	4-2, 4-3
HM	1-14, 1-15
HMB	1-36, 1-37
HMD	1-14, 1-15
HMS	1-36, 1-37
HS	1-14, 1-15
HSD	1-14, 1-15
JDS9 Series	10-15
JPS10 Series	10-18, 10-19
JPS10-1Y	10-18, 10-19
JPS10-2Y	10-18, 10-19
JTS5 Series	10-12
JTS6 Series	10-12
JTS7 Series	10-12
K Series	6-54 to 6-66
K-1000	6-65
K-1000A1F03	6-65
K200A1C	6-55 to 6-57
K200B1C	6-55 to 6-57
K200B3C02	6-55 to 6-57
K4001A2C	6-58 to 6-61
K4001A3C	6-58 to 6-61
K4001A7C	6-58 to 6-61
K4001B2C	6-58 to 6-61
K4001B3C	6-58 to 6-61
K4001B7C	6-58 to 6-61
K400A1D	6-58 to 6-61
K400A1F	6-58 to 6-61
K400A1F1	6-58 to 6-61
K400A4C1	6-58 to 6-61
K400B1D	6-58 to 6-61
K400B1F	6-58 to 6-61
K400B3C05	6-58 to 6-61
K400B712C	6-58 to 6-61
K40P	7-61, 16-4, 16-11
K41 Series	7-87, 16-2 16-4, 16-11
K41A	7-59
K41B	7-59
K41C	7-59
K41P	7-60, 16-13
K41R	7-60
K43 Series	7-87, 16-2 16-4, 16-11
K43A	7-69
K43B	7-69
K43C	7-69
K43P	7-70, 16-11
K43R	7-70
K44 Series	16-11
K44P	7-66, 16-4, 16-11
K45C	7-57, 7-87, 16-4
K47 Series	16-4
K47A	7-63
K47B	7-63
K4OP364	7-61
K500A2C	6-62 to 6-64
K500A3C	6-62 to 6-64
K500A7C01	6-62 to 6-64
K500B2C	6-62 to 6-64
K500B3C	6-62 to 6-64
K500B7C01	6-62 to 6-64
K60C	7-83
K61 Series	7-82, 16-2
K61A	7-84
K61B	7-84
K61C	7-84
K62 Series	16-2
K62A	7-78
K62C	7-78
K64C	7-85, 16-2, 16-6
K70 Series	7-86, 16-6
K70A	7-86
K70B	7-86
K70C	7-86
K81 Series	16-2, 16-11
K81A/B	7-67
K81C	7-68
KA175	6-41
KA175B3C	6-41
KC-2	7-74, 7-88, 16-4, 16-11
KC-8	7-88
KC-11	7-74, 7-88, 16-4
KC-12	7-74, 7-88
KC-14	7-73, 7-88, 16-2
KC-15	7-75, 7-88, 16-4
KC-16	7-75, 7-88, 16-4
KC-18	7-73, 7-88, 16-2
KC-20	7-79, 16-2, 16-4
KC-22	7-80, 16-2
KC-28	7-80, 16-4
KC-30	7-79, 16-2, 16-4
KC-32	7-80, 16-2
KC-38	7-80, 16-4
KM-13	7-89
KM-17	7-62, 16-4
KP61	7-82, 16-4
LEV100 Series	7-29, 7-30 7-31, 16-2, 16-4
LEV200 Series	7-32, 7-33, 16-2 16-4
LS	1-47, 1-48
MA	1-10, 1-11
MAD	1-10, 1-11
MADD	1-10, 1-11
MAP100 Series	7-8, 7-9, 16-2 16-4
MAP101 Series	7-6, 7-7
MAP200 Series	7-10, 7-11, 16-2 16-4
MAP201 Series	7-12, 7-13
MAT	1-22, 1-23
MAV	3-2, 3-3
MAVD	3-2, 3-3
MAVDD	3-2, 3-3
MDR Series	12-2, 12-3
MDR_5060	12-3
MDR-131-1	12-3
MDR-131-2	12-3
MDR-134-1	12-3
MDR-134-2	12-3
MDR-135-1	12-3
MDR-136-1	12-3
MDR-137-8	12-3
MDR-138-8	12-3
MDR-141-1	12-3
MDR-141-2	12-3
MDR-163-1	12-3
MDR-163-2	12-3
MDR-167-1	12-3
MDR-170-1	12-3
MDR-170-2	12-3
MDR-172-1	12-3
MDR-173-1	12-3
MDR-4076	12-3
MDR-4091	12-3
MDR-4092	12-3
MDR-5035	12-3
MDR-5061	12-3
MDR-6064	12-3
MDR-66-4	12-3
MDR-67-2	12-3
MDR-67-3	12-3
MDR-7020	12-3
MDR-7036	12-3
MGA	1-16, 1-17
MGAD	1-16, 1-17
MGADD	1-16, 1-17
MGAT	1-26, 1-27
MGS	1-18, 1-19
MGSD	1-18, 1-19
MGSDD	1-18, 1-19
MGST	1-28, 1-29
ML Series	12-28, 12-29 12-30, 12-31, 12-32
MS	1-12, 1-13
MS18-1006	10-13, 10-14
MS14-1Y	10-10, 10-11
MS14-2Y	10-10, 10-11
MS14-3Y	10-10, 10-11
MSD	1-12, 1-13
MSDD	1-12, 1-13
MST	1-24, 1-25
MSV	3-4, 3-5
MSVD	3-4, 3-5
MW3	2-2, 2-3, 2-4
MW3HP	2-2, 2-3, 2-4
MW4	2-2, 2-5, 2-6
MW4HP	2-2, 2-5, 2-6
MW6	2-2, 2-7, 2-8
MW6HP	2-2, 2-7, 2-8
PD10	7-56, 7-87
PD10A	7-56
PD10B	7-56
PD10P	7-56
PD350X	7-48
PD5	7-55, 7-87
Power Distribution Units	14-2
Primer Firing Solenoid	13-5
PS12 Series	10-16, 10-17
PS12-1W	10-16, 10-17
PS12-1Y	10-16, 10-17
Q-50	6-133, 6-134 6-135, 6-136, 6-36 6-138, 6-139
Q-50A	6-136
Q-50AB-1	6-140
Q-50AB-2	6-140
Q-50AC	6-140
Q-50AG	6-140
Q-50BB	6-135
Q-50BD	6-135
Q-50CC	6-137
Q-50E	6-135
Q-50F	6-134
Q-50J	6-140
Q-50S	6-138
Q-50Y	6-133
Q-50Z	6-138
QR-50	6-141, 6-142
QR-50H	6-142
QR-50V	6-141
RA-3100	6-146, 6-147 6-148, 6-49
RA-3100D	6-146
RA-3100F	6-149
RA-3100H	6-148
RA-3100J-1	6-147
RA-3100L	6-147
RA-3100M	6-146

Catalog 5-1773450-5
Revised 3-13

www.te.com

Dimensions are shown for reference purposes only. Specifications subject to change.

Dimensions are in millimeters unless otherwise specified.

USA: +1 800 522 6752
Asia Pacific: +86 0 400 820 6015
UK: +44 800 267 666

For additional support numbers please visit www.te.com

Part Number Index (Continued)

Part No.	Page
Refueling Release Solenoid	13-6
S06CBA335	16-4
S06FNA218	16-4
S06HBA318	16-4
S0GJNB218	16-4
SA136F	6-42
SCB Series	12-35
SCC Series	12-35
SCE Series	12-36
SCF Series	12-37
SF	1-68, 1-69
SF5A	1-68, 1-69
SHC	1-34, 1-35
SHCD	1-34, 1-35
SHCS	1-34, 1-35
SHCSD	1-34, 1-35
SMGA	1-30, 1-31
SMGAD	1-30, 1-31
SMGADD	1-30, 1-31
SMGS	1-32, 1-33
SMGSD	1-32, 1-33
SMGSDD	1-32, 1-33
SR	1-53, 1-54
SRC Series	12-38
SS	1-63, 1-64
SSC Series	12-39
SSC12AAA	12-39
SSC12ABA	12-39
SSC12ACA	12-39
SSC12ADA	12-39
SSC12AGA	12-39
SSC12ALA	12-39
SSF Series	12-40
SSFR90A	12-40
SSFR90X	12-40
SST Series	12-41
STA Series	12-42
TD2	5-2, 5-3, 5-4, 5-5
TD228	5-2, 5-3, 5-4, 5-5
TD229	5-2, 5-3, 5-4, 5-5
TD230	5-2, 5-3, 5-4, 5-5
TD231	5-2, 5-3, 5-4, 5-5
TR Series	12-28, 12-29 12-30, 12-31, 12-32
Type 3SAC	1-45, 1-46
Type 3SAE	1-45, 1-46
Type 3SAM	1-51, 1-52
Type 3SBC	1-41, 1-42
Type 3SBH	1-55, 1-56, 1-57
Type 3SBM	1-60, 1-61, 1-62
Type 3SCC	1-43, 1-44
Type 3SCV	1-38, 1-39
Type 3SDH	1-58, 1-59
Type 3SDM	1-49, 1-50
VCA Series	12-33
VCAA	12-33

Part No.	Page
VCAB	12-33
VMA Series	12-34
VMAXAA	12-34
VMAXBA	12-34
VMAXEA	12-34
VMAXQA	12-34
VTM1 Series	12-43, 12-44
VTM1ECD	12-43
VTM1EDD	12-43
VTM2 Series	12-45
VTM3 Series	12-46
VTM4 Series	12-47
VTM7 Series	12-48
VTMA1 Series	12-49
VTMA1ACA	12-49
VTMA1ADA	12-49
VTMR1 Series	12-50
VTMR1AEA	12-50
WC1 Series	11-24
WC1G Series	11-34
WC3 Series	11-25
WCB Series	11-23
WCD Series	11-26
WCT1 Series	11-24
WCTC Series	11-25
WD Series	11-2
WD25	11-3
WD25-001	11-3
WD25-013	11-3
WD2759	11-4, 11-5
WD2759-003	11-4
WD32	11-6, 11-7
WD32-003	11-6
WD32-011	11-6
WD47	11-8
WD47-001	11-8
WD5051	11-9, 11-20
WD5051-001	11-9
WD5051-003	11-9
WD5051-3-001	11-9
WD81OU Series	11-11
WGD Series	11-33
WOF Series	11-28
WOUF Series	11-29
WOUV DC Series	11-15
WOUVT Series	11-16
WUF Series	11-28
WUV/WOV DC Series	11-12
WUV/WOV Series	11-13
WUVT/WOVT Series	11-14
Z-700ZG	6-123

Catalog 5-1773450-5
Revised 3-13

www.te.com

Dimensions are shown for reference purposes only. Specifications subject to change.

Dimensions are in millimeters unless otherwise specified.

USA: +1 800 522 6752
Asia Pacific: +86 0 400 820 6015
UK: +44 800 267 666

For additional support numbers please visit www.te.com

Engineering Notes

Catalog 5-1773450-5
Revised 3-13

www.te.com

Dimensions are shown for reference purposes only. Specifications subject to change.

Dimensions are in millimeters unless otherwise specified.

USA: +1 800 522 6752
Asia Pacific: +86 0 400 820 6015
UK: +44 800 267 666

For additional support numbers please visit www.te.com

Product Information Center: Relay Technical Support

United States
800-522-6752
Kilovac/Wilmar Products (800-253-4560)
Hartman Products (419-521-9500)

Belgium
805-220-2023

Netherlands
805-220-2023

Luxembourg
805-220-2023

China
+86 400-820-6015

Denmark
+46 8-5072-5000

Sweden
+46 8-5072-5000

Finland
+46 8-5072-5000

Norway
+46 8-5072-5000

France
+33 1-34-20-8686

Germany
+49 6151-607-1999

Italy
+39 011-4012632

Spain
+34 93-2910366

Switzerland
+41 71-447-0447

United Kingdom
+44 0800-267666

te.com

© 2013 Tyco Electronics Corporation, a TE Connectivity Ltd. Company. All Rights Reserved.
5-1773450-5 GIC 7.5K MS 03/2013
TE Connectivity, TE connectivity (logo) and TE (logo) are trademarks. Other logos, product and/or company names might be trademarks of their respective owners.

Mouser Electronics

Authorized Distributor

Click to View Pricing, Inventory, Delivery & Lifecycle Information:

TE Connectivity:

FCA-325-159 FCA-325-163 FCA-325-158 FCA-325-160 FCA-325-141 FCA-325-91 FCA-325-3304L FCA-325-3204L FCA-325-3205L M83536/33-002L M83536/32-003L M83536/32-005L M83536/32-001L M83536/33-001L M83536/33-005L M83536/32-002L MS27245-2 M83536/15-021L M39016/15-106L