Discontinued

FOR BOARD-TO-CABLE CONNECTION

230 SERIES (FOR FLAT CABLE CONNECTION)

■ FEATURES

- Two 1.27 mm (0.050 in.) pitch flat cables can be used.
- 1.27 mm (0.05 in.) pitch contact arrangement in two rows and terminal arrangement in a four-row staggered array (2.54 mm × 1.905 mm) (0.100 × 0.075 in.) enable high-density mounting.
- The socket kit is comprised of two IDC sockets (body 1, body 2). After IDC termination, the bodies are "snapped" together to form one complete socket assembly.
- Connectors with 20 to 100 contacts are available.
- Latch mechanism provides easy disconnection.
- A clip-on key prevents incorrect insertion of a connector when two or more connectors with the same number of contacts are mounted on a PC board.

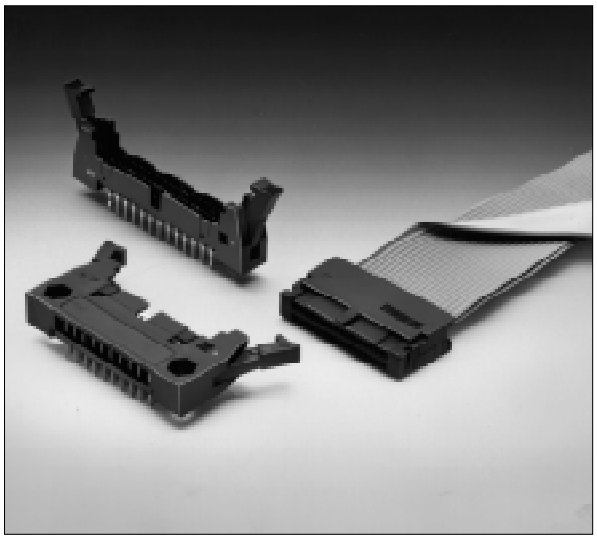

■ SPECIFICATIONS

Item	Specifications
Operating temperature range	–55°C to +105°C
Current rating	DC 0.5 A
Voltage rating	AC 240 V
Contact resistance	30 mΩ max. (DC 6 V, 0.1A)
Insulation resistance	1000 MΩ min. (DC 500 V)
Dielectric withstand voltage	AC 750 V for 1 minute
Insertion force	3 kg max. (20 contacts)
Withdrawal force	0.4 kg min. (20 contacts)
Applicable wire	1.27 mm (0.050 in.) flat cable AWG #28 (stranded wire)

■ MATERIALS

Item	Materials	
Insulator	Polyester	
Conductor	Copper alloy	
Plating	Contact	Gold plating
	Terminal	Palladium plating

■ ORDERING CODE

FCN-23 4 P 040-G / M A

- A: Others
- M: With a latch
  W: Insulation displacement connection
- G: Plating
  G: Gold plating
- 040: Number of contacts: 20, 26, 34, 40, 50, 52, 60, 68, 80, and 100
- P: Body
  P: Plug
  B: Socket
- 4: Tail type
  4: Straight
  5: Right-angle
  7: Insulation displacement connection
- 23: 230 series connector
- FCN: Fujitsu connector

■ APPLICATIONS

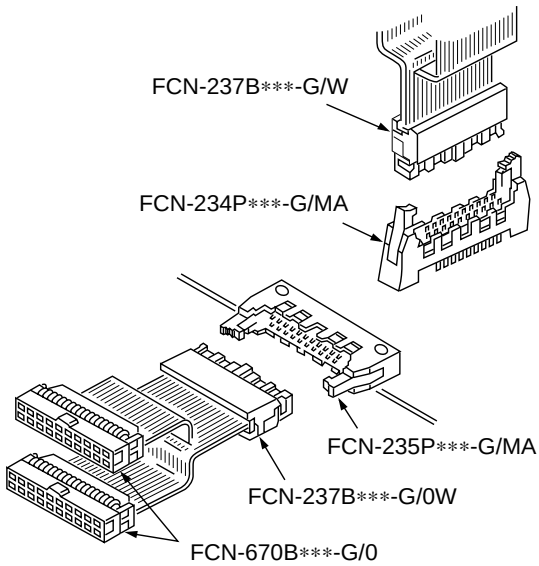

STRAIGHT PLUG
■ DIMENSIONS

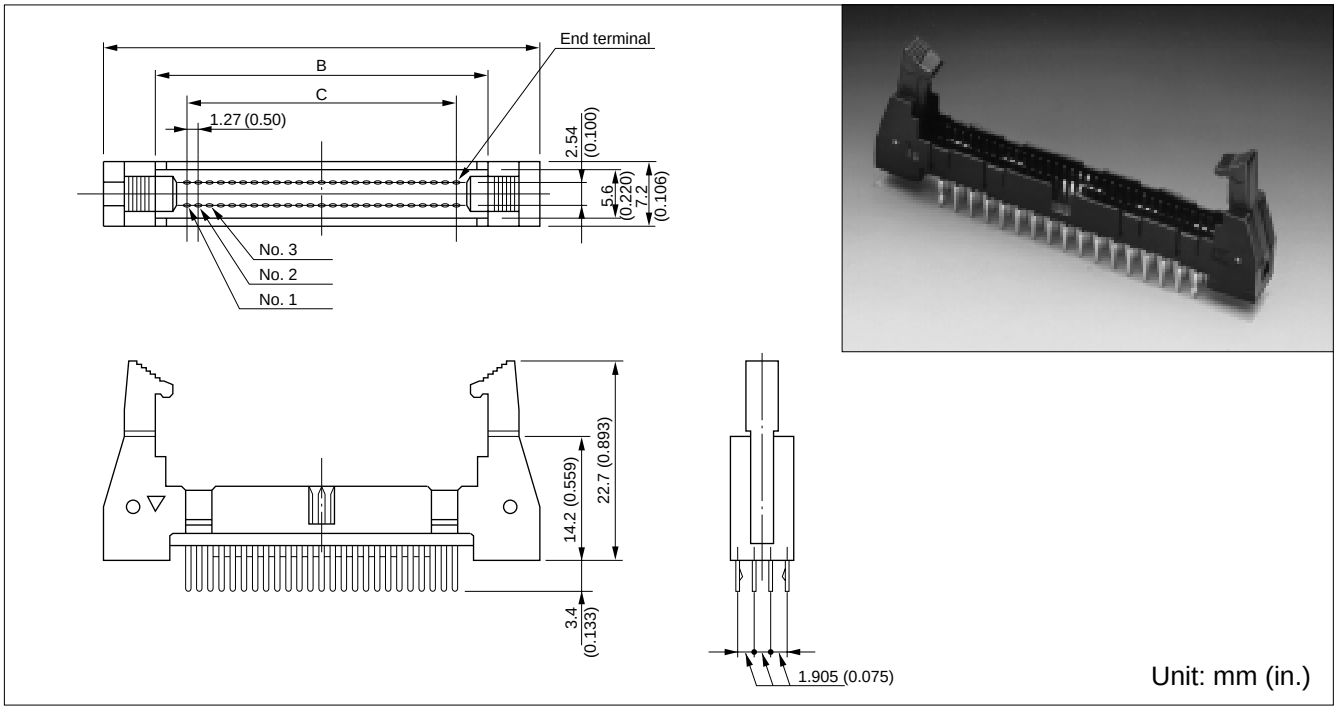

■ MOUNTING HOLE LAYOUT

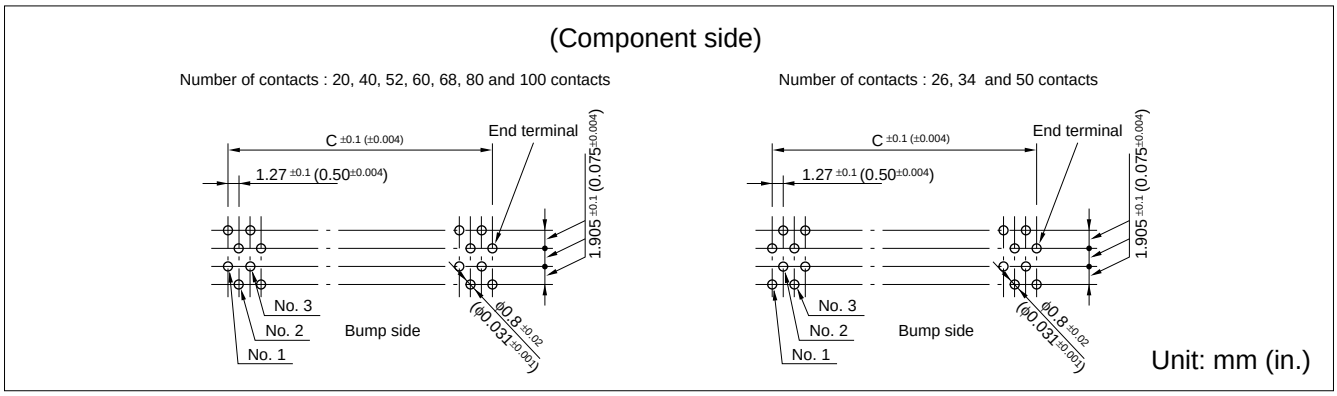

■ PART NUMBERS AND DIMENSIONS

Number of contacts	Part number	Dimensions: mm (in.)		
		A	B	C
20	FCN-234P020-G/MA	30.40 (0.035)	18.77 (0.738)	11.43 (0.450)
26	FCN-234P026-G/MA	34.21 (1.346)	22.58 (0.888)	15.24 (0.600)
34	FCN-234P034-G/MA	39.29 (1.546)	27.66 (1.088)	20.32 (0.800)
40	FCN-234P040-G/MA	43.10 (1.656)	31.47 (1.238)	24.13 (0.950)
50	FCN-234P050-G/MA	49.45 (1.946)	37.82 (1.488)	30.48 (1.200)
52	FCN-234P052-G/MA	50.72 (1.996)	39.09 (1.538)	31.75 (1.250)
60	FCN-234P060-G/MA	55.80 (2.196)	44.17 (1.738)	36.83 (1.450)
68	FCN-234P068-G/MA	60.88 (2.396)	49.25 (1.938)	41.91 (1.650)
80	FCN-234P080-G/MA	68.50 (2.696)	56.87 (2.238)	49.53 (1.950)
100	FCN-234P100-G/MA	81.20 (3.196)	69.57 (2.738)	62.23 (2.450)

The connectors listed above have clinched retention tails. This series also includes connectors with tails which are not clinched for retention. Specify a part number by replacing -G/MA at the end with -G/MB.

RIGHT-ANGLE PLUG

■ DIMENSIONS

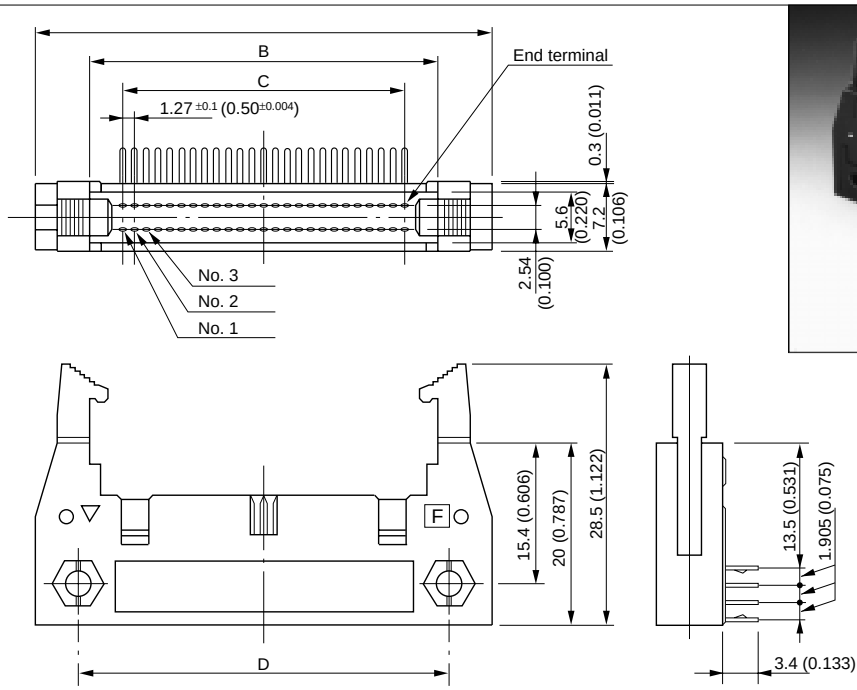

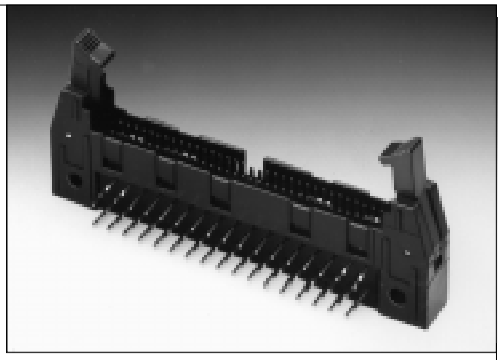

Unit: mm (in.)

■ MOUNTING HOLE LAYOUT

(Component side)

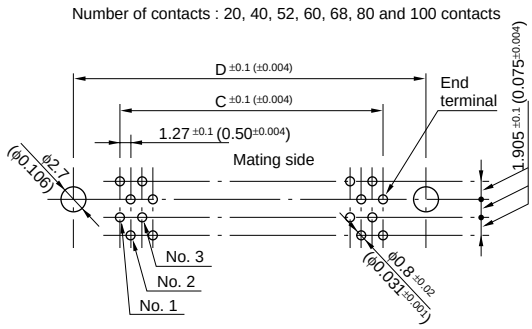

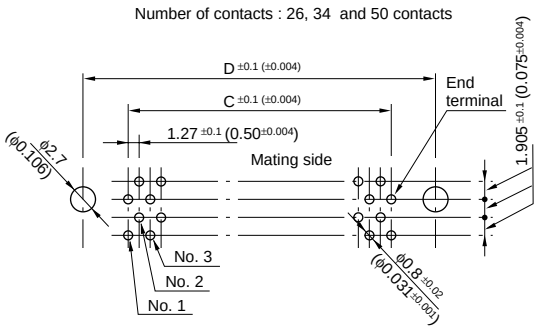

Unit: mm (in.)

■ PART NUMBERS AND DIMENSIONS

Number of contacts	Part number	Dimensions: mm (in.)			
		A	B	C	D
20	FCN-235P020-G/MA	30.40 (0.035)	18.77 (0.738)	11.43 (0.450)	21.59 (0.850)
26	FCN-235P026-G/MA	34.21 (1.346)	22.58 (0.888)	15.24 (0.600)	25.40 (1.000)
34	FCN-235P034-G/MA	39.29 (1.546)	27.66 (1.088)	20.32 (0.800)	30.48 (1.200)
40	FCN-235P040-G/MA	43.10 (1.656)	31.47 (1.238)	24.13 (0.950)	34.29 (1.350)
50	FCN-235P050-G/MA	49.45 (1.946)	37.82 (1.488)	30.48 (1.200)	40.64 (1.600)
52	FCN-235P052-G/MA	50.72 (1.996)	39.09 (1.538)	31.75 (1.250)	41.91 (1.650)
60	FCN-235P060-G/MA	55.80 (2.196)	44.17 (1.738)	36.83 (1.450)	46.99 (1.850)
68	FCN-235P068-G/MA	60.88 (2.396)	49.25 (1.938)	41.91 (1.650)	52.07 (2.050)
80	FCN-235P080-G/MA	68.50 (2.696)	56.87 (2.238)	49.53 (1.950)	59.69 (2.350)
100	FCN-235P100-G/MA	81.20 (3.196)	69.57 (2.738)	62.23 (2.450)	72.39 (2.850)

The connectors listed above have clinched retention tails. This series also includes connectors with tails which are not clinched for retention. Specify a part number by replacing -G/MA at the end with -G/MB.

SOCKET

■ DIMENSIONS

[Body 1]

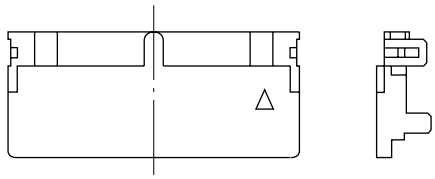

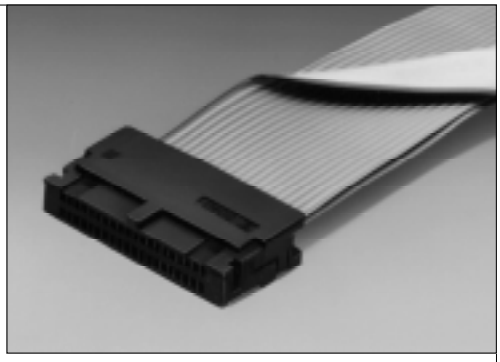

[Body 2]

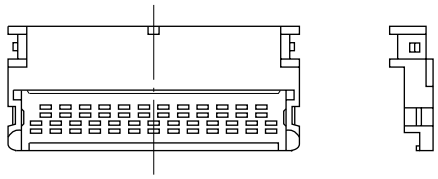

[Connection diagram]

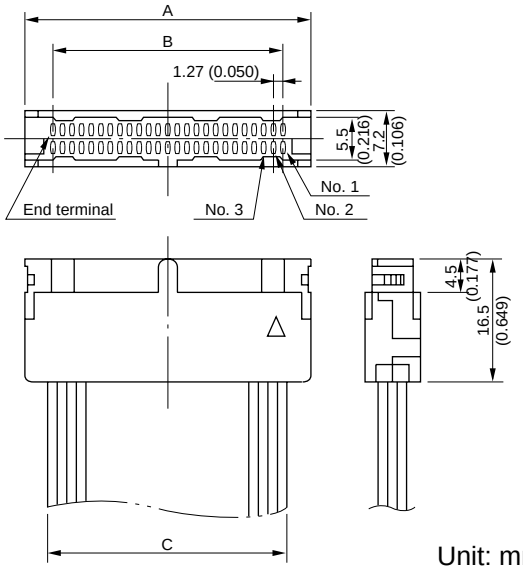

[Connector cover with IDC holders
(for main bodies 1 and 2)]

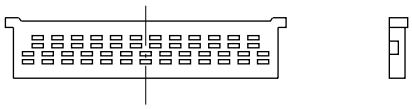

Unit: mm (in.)

■ PART NUMBERS AND DIMENSIONS

Number of contacts	Part number	Dimensions: mm (in.)		
		A	B	C
20	FCN-237B020-G/W	18.57 (0.731)	11.43 (0.450)	12.70 (0.500)
26	FCN-237B026-G/W	22.38 (0.881)	15.24 (0.600)	16.51 (0.650)
34	FCN-237B034-G/W	27.46 (1.081)	20.32 (0.800)	21.59 (0.850)
40	FCN-237B040-G/W	31.27 (1.231)	24.13 (0.950)	25.40 (1.000)
50	FCN-237B050-G/W	37.62 (1.481)	30.48 (1.200)	31.75 (1.250)
52	FCN-237B052-G/W	38.89 (1.531)	31.75 (1.250)	33.02 (1.300)
60	FCN-237B060-G/W	43.97 (1.731)	36.83 (1.450)	38.10 (1.500)
68	FCN-237B068-G/W	49.05 (1.931)	41.91 (1.650)	43.18 (1.700)
80	FCN-237B080-G/W	56.67 (2.231)	49.53 (1.950)	50.80 (2.000)
100	FCN-237B100-G/W	69.37 (2.731)	62.23 (2.450)	63.50 (2.500)

See page 2-39 for IDC tools.

■ HARNESS SHAPE

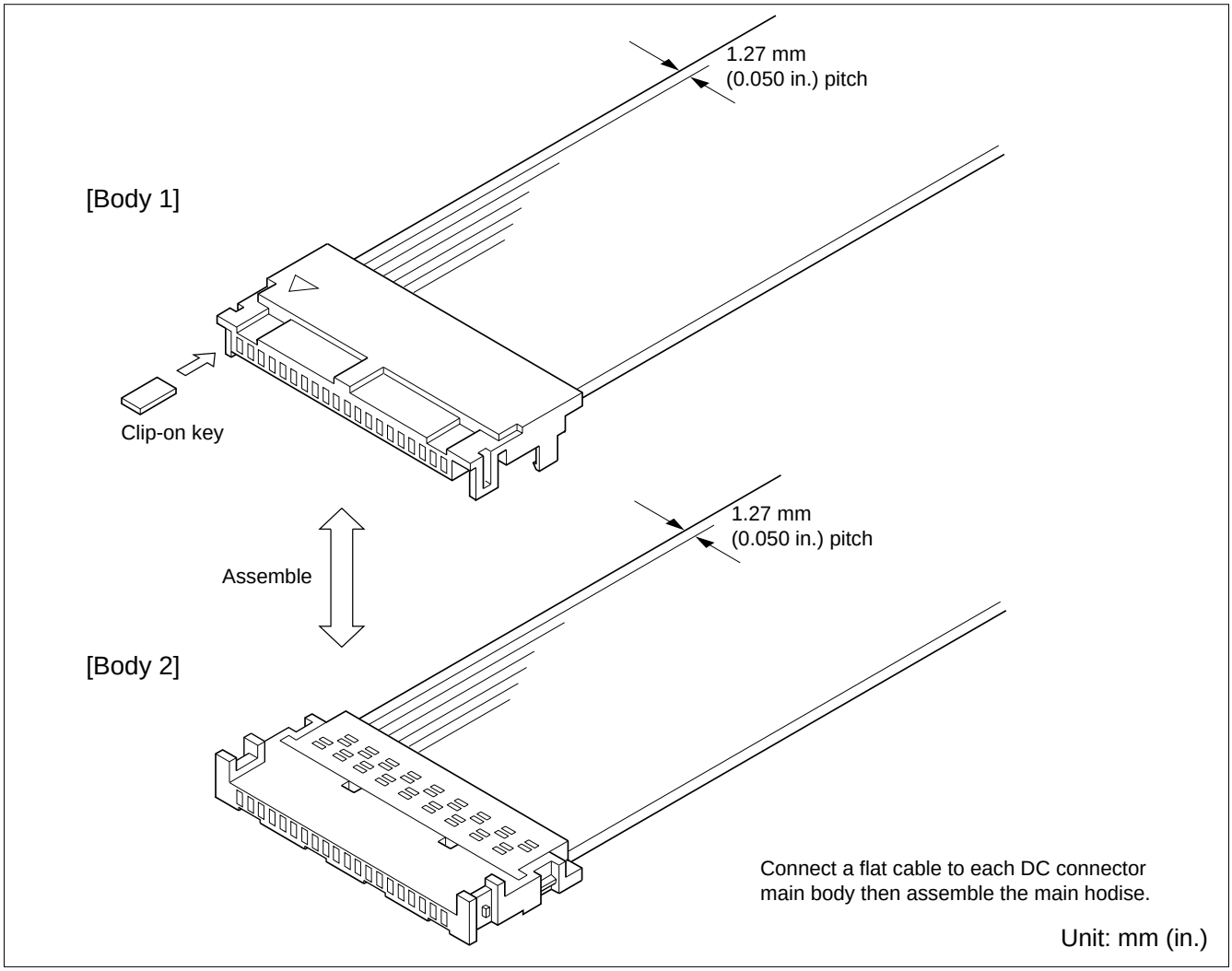

■ ACCESSORY

Clip-on keys
Part number: FCN-230A1

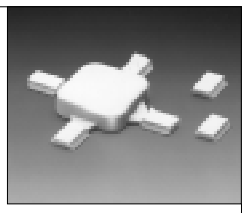

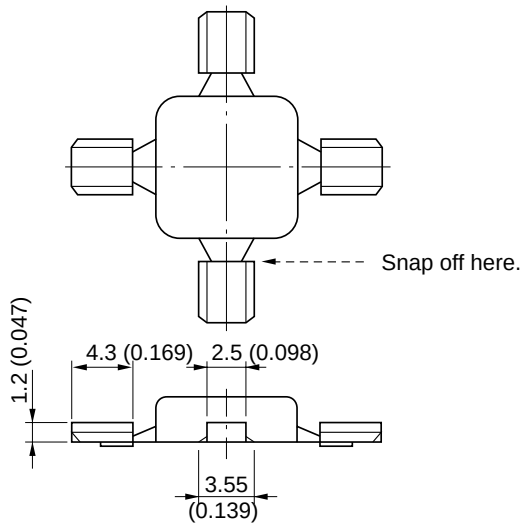

IDC TOOLS

Hand press

FCN-707T-T101/H

Cable cutter

FCN-707T-T001/H

Locator plate

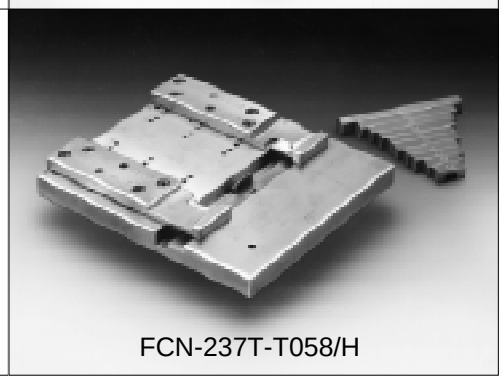

FCN-237T-T058/H

■ CONNECTION PROCEDURE (OUTLINE)

1. Cut the flat cable with the cable cutter (cut perpendicular to the cable in the same way as for conventional MIL types).
2. Position the cover, flat cable, and connector body on the locator plate, then make connection using the hand press.
3. Connect the other connector body in the same way.

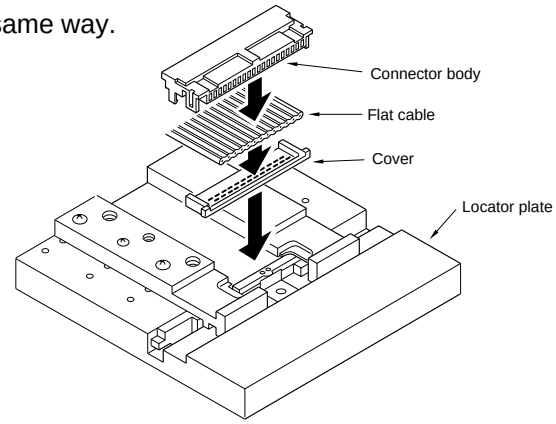

4. Assemble the connector bodies.

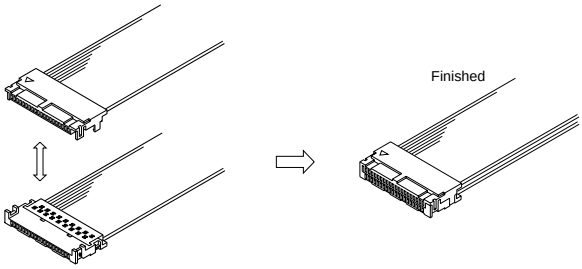

Fujitsu Components International Headquarter Offices

Japan
Fujitsu Component Limited
Gotanda-Chuo Building
3-5, Higashigotanda 2-chome, Shinagawa-ku
Tokyo 141-0022, Japan
Tel: (81-3) 5449-7010
Fax: (81-3) 5449-2626
Email: promothq@fcl.fujitsu.com
Web: www.fcl.fujitsu.com

North and South America
Fujitsu Components America, Inc.
250 E. Caribbean Drive
Sunnyvale, CA 94089 U.S.A.
Tel: (1-408) 745-4900
Fax: (1-408) 745-4970
Email: components@us.fujitsu.com
Web: http://us.fujitsu.com/components

Europe
Fujitsu Components Europe B.V.
Diamantlaan 25
2132 WV Hoofddorp
Netherlands
Tel: (31-23) 5560910
Fax: (31-23) 5560950
Email: info@fceu.fujitsu.com
Web: emea.fujitsu.com/components

Asia Pacific
Fujitsu Components Asia Ltd.
102E Pasir Panjang Road
#01-01 Citilink Warehouse Complex
Singapore 118529
Tel: (65) 6375-8560
Fax: (65) 6273-3021
Email: fcal@fcal.fujitsu.com
www.fcal.fujitsu.com

© 2007 Fujitsu Components America, Inc. All rights reserved. All trademarks or registered trademarks are the property of their respective owners. Fujitsu Components America, Inc. or its affiliates do not warrant that the content of the datatasheet is error free. In a continuing effort to improve our products, Fujitsu Components America, Inc. or its affiliates reserve the right to change specifications/datasheets witout prior notice. Rev. November 2, 2007.

Mouser Electronics

Authorized Distributor

Click to View Pricing, Inventory, Delivery & Lifecycle Information:

Fujitsu:
FCN-237B020-G/W FCN-235P100-G/MA FCN-237B068-G/W FCN-237B100-G/W FCN-237B026-G/W FCN-235P050-G/MA FCN-235P068-G/MA FCN-237B040-G/W FCN-237B060-G/W FCN-237B034-G/W FCN-235P026-G/MA FCN-234J096-G/U FCN-237R068-G/E FCN-235P052-G/MA FCN-230C020-C/E FCN-235P060-G/MA FCN-237R028-G/F FCN-235P080-G/MA FCN-235P040-G/MA FCN-237B080-G/W FCN-235D068-G/E FCN-230C068-E/SA FCN-237B050-G/W FCN-235P020-G/MA FCN-237B052-G/W FCN-235P034-G/MA FCN-234P096-G/0 FCN-230C050-C/E