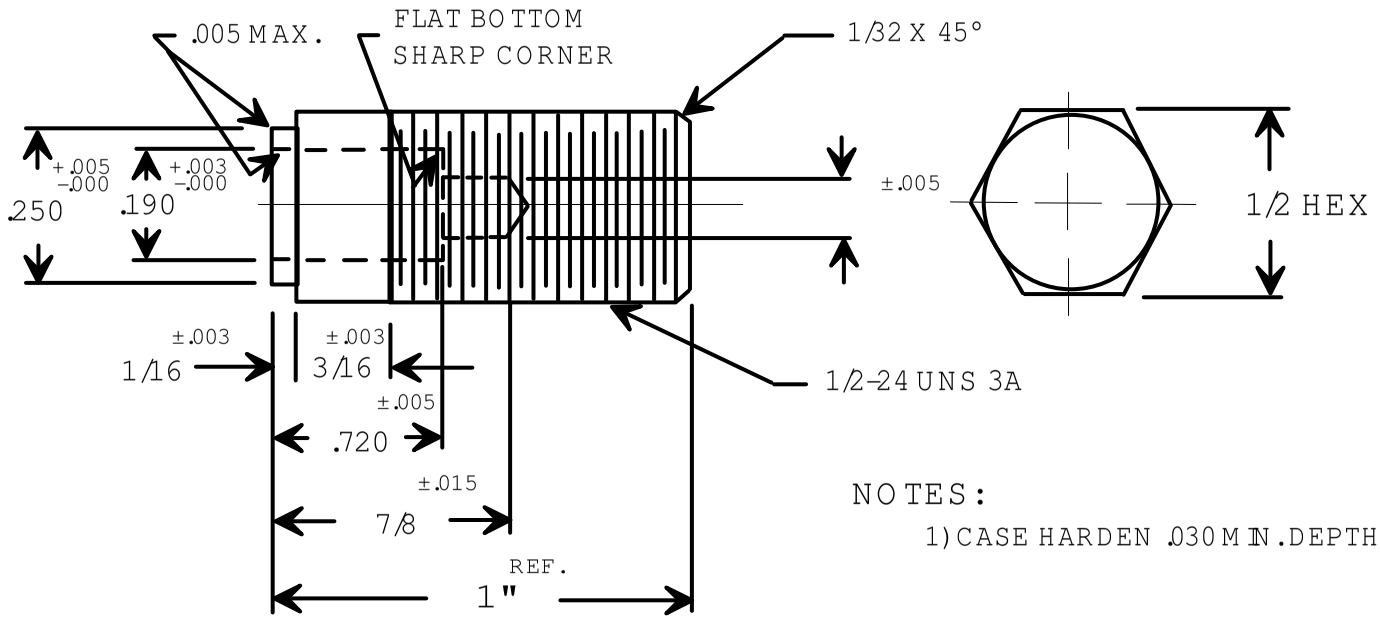

NOTES:

1) CASE HARDEN .030 MIN. DEPTH

RAF ELECTRONIC HARDWARE
95 SILVERMINE RD. SEYMOUR, CT. 06483
TEL: (203) 888-2133
FAX: (203) 888-9860
WEB: http://www.rafhdwe.com
a Division of MW Industries, Inc.

DRAWING NOT TO SCALE

DRAWN BY: GARY HUPPRICH	DATE 07/12/11	TOLERANCES (EXCEPT AS NOTED)	TITLE ANVIL
CHECKED BY:	DATE	FRACTION ±.005	
MATERIAL STEEL		DECIMAL ±.005	PART NO. AR-21
FINISH			

Mouser Electronics

Authorized Distributor

Click to View Pricing, Inventory, Delivery & Lifecycle Information:

RAF Electronic Hardware:

AR-21