THIS DRAWING IS UNPUBLISHED. RELEASED FOR PUBLICATION -,- .
© COPYRIGHT - BY TYCO ELECTRONICS CORPORATION. ALL RIGHTS RESERVED.

LOC	DIST
AF	50

REVISIONS

P	LTR	DESCRIPTION	DATE	DWN	APVD
	D	REV PER 0G3A-1012-04	03JAN05	JR	KR

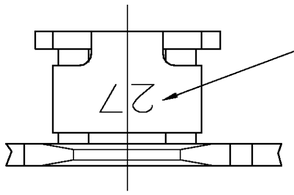

IDENTIFICATION NUMBER 27
FOR MAGNET WIRE RANGE

1 CONTINUOUS STRIP ON REELS WITH TERMINALS LOCATED ON 5.59±0.08 [.220±.003] CENTERS.

2 SLOT TERMINATES EITHER A SINGLE OR DOUBLE MAGNET WIRE OF THE SAME SIZE AND TYPE.
COPPER RANGE: 0.91–1.15mm [#19–#17] AWG.

3 AFTER INSERTION INTO PLASTIC HOLDER TAB PORTION MUST BE BENT OVER 45° TO 90° OR POTTED TO PREVENT PULL–OUT WHEN MATING RECEPTACLE IS DISCONNECTED.

4 SPECIAL CAVITY ANVIL HEIGHT REQUIRED
3.30±0.07 [.130±.003]
REF APPLICATION SPEC 114–2046, SEC. 3.2, NOTE 7

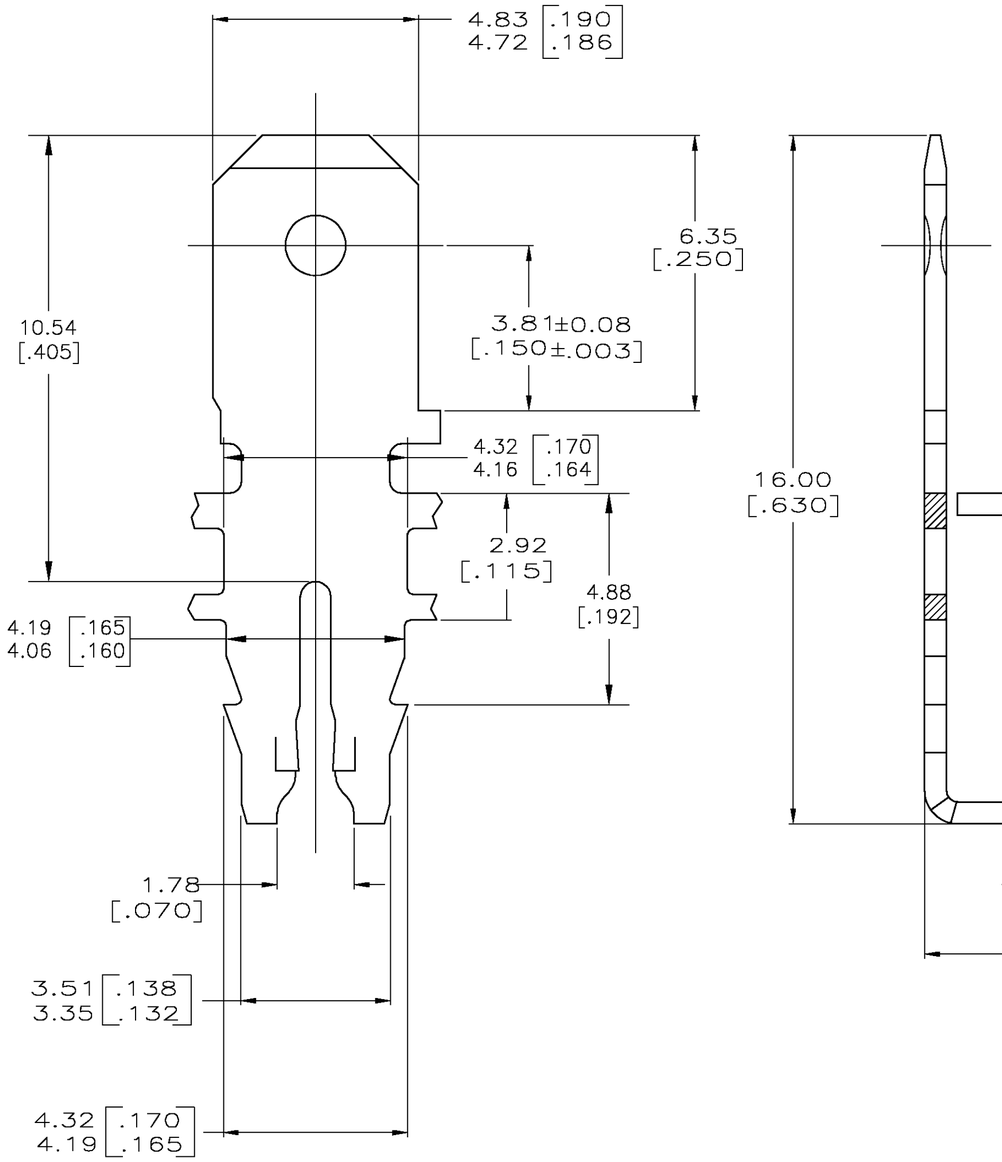

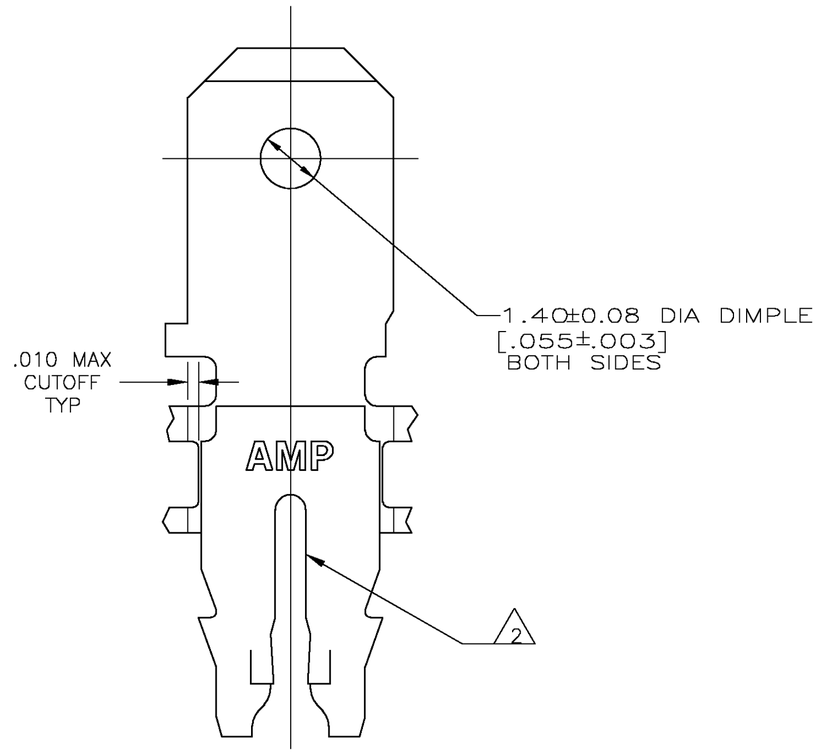

1742160

1742160–1

PART NUMBER

THIS DRAWING IS A CONTROLLED DOCUMENT.

DIMENSIONS: INCHES

TOLERANCES UNLESS OTHERWISE SPECIFIED:
0 PLC ± –
1 PLC ± –
2 PLC ± 0.25 [.010]
3 PLC ± –
4 PLC ± –
ANGLES ± –

MATERIAL: 4M BRASS

FINISH: 0.002032 [.000080] MIN TIN PLATE

DWN MICHAEL S. FEHER 16AUG2004
CHK KURT A. RANDOLPH 16AUG2004
APVD KURT A. RANDOLPH 16AUG2004
PRODUCT SPEC 108–2012
APPLICATION SPEC 114–2046 4
WEIGHT –

CUSTOMER DRAWING

Tyco Electronics Corporation
Harrisburg, Pa 17105–3608

NAME: TERMINAL, TAB, 4.75 [.187] FASTON, 300 SERIES MAG–MATE

SIZE	CAGE CODE	DRAWING NO	RESTRICTED TO
A2	00779	C–1742160	–

SCALE 10:1 SHEET 1 OF 1 REV D