/home/us024474/tecmod

DRAWING MADE IN THIRD ANGLE PROJECTION

PART NUMBER	REV	FIRST USED
1852072-1	A	122500-1
1852072-2	A	565435-5
1852072-3	A	354500-1
7-1852072-7	A	–

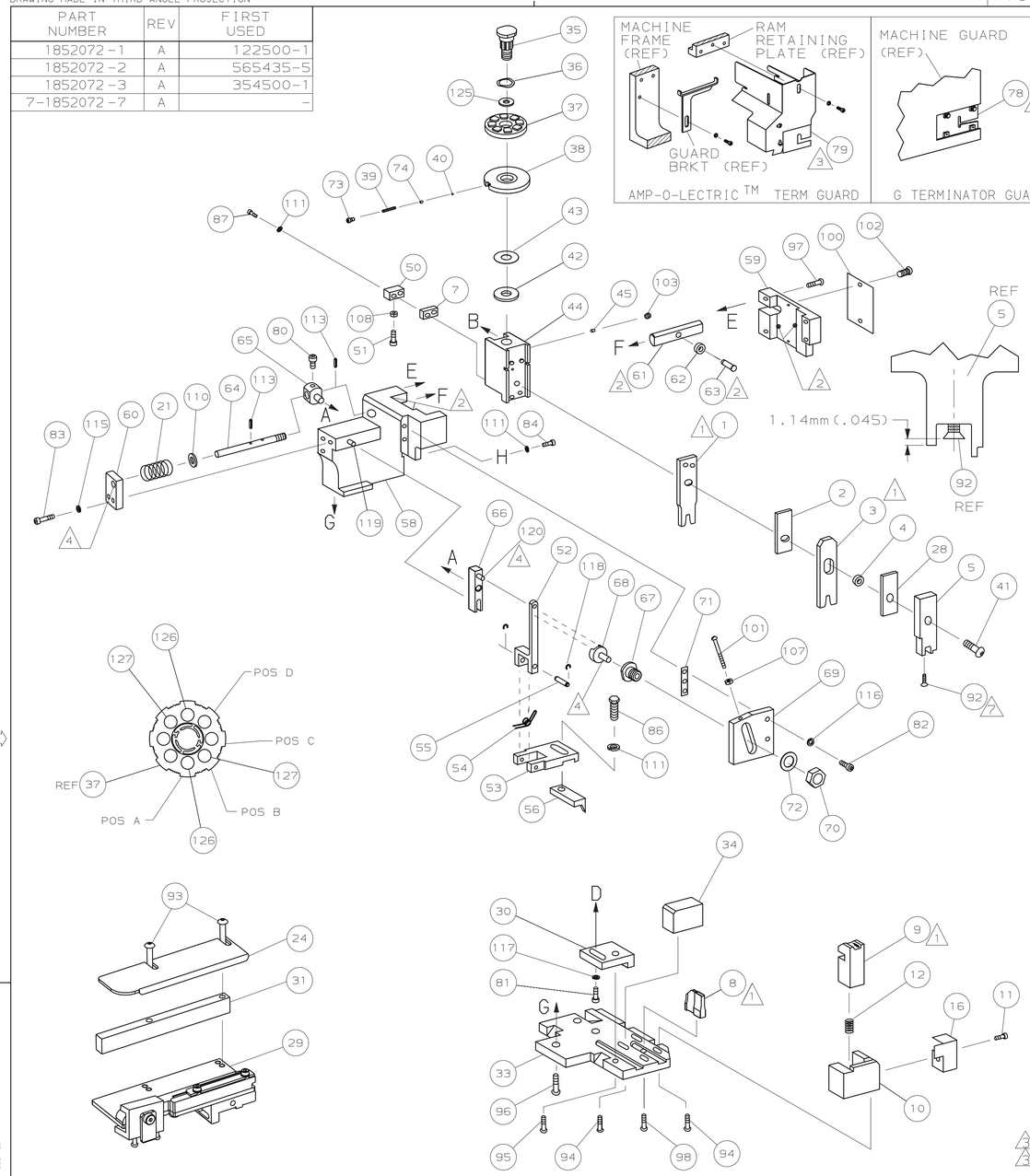

TERMINAL NAME: ELO POWER 2.8 SEALED TERMINAL △6

AMP TERMINAL PN	SIEMENS TERMINAL AMP CRIMP SPECS		
2-1411593-1	PAD LTR	CRIMP HEIGHT	WIRE SIZE
SIEMENS TERMINAL PN	A	1.38 ±0.05mm [.054 ±.002]	1.0mm²
V23540-X6000-Y63	B	1.28 ±0.05mm [.050 ±.002]	0.75mm²
	C	NOT	USED
	D	NOT	USED

AMP SEAL PN	CRIMP	SIZE	TYPE	RANGE
0-1393458-1	WIRE	1.83mm [.072]	F	0.75-1.0 mm²
SIEMENS SEAL PN	INSUL	3.99mm [.157]	O	Ø3.5mm MAX
V23540-M1000-Z111				

WIRE STRIP LENGTH	TERM APPL SPEC	FEED	APPL INSTRUCTION	SET UP GAGE	LAYOUT
5.1-5.9mm	NONE	10mm	408-8040	458637-1	L1852072

-1	LEADMAKER	MECH POST FEED
-2	BENCH MODEL K	MECH PRE FEED
-3	BENCH MODEL G	MECH PRE FEED

-77	–	SPARE PARTS KIT

-77	-3	-2	-1	U/M	DWG SIZE	PART NO	DESCRIPTION	ITEM NO
								129
								128
-	2	2	2	-	C	3-354779-1	PIN, WIRE DISC (.3145)B	127
-	2	2	2	-	C	2-354779-2	PIN, WIRE DISC (.3100)A	126
-	1	1	1	-	A	986950-1	WASHER, FLAT PRECISION	125
-	1	1	1	-	A	217238-1	GENERAL INSTRUCTION PACKAGE	124
-	1	1	1	-	-	4088040	SF APPL INST 408-8040	123
								122
								121
-	REF	REF	REF	-	A	1-21030-1	PIN,DOWEL(ø.187x.50)LEVER	120
-	REF	REF	REF	-	A	1-21030-6	PIN,DOWEL(ø.187x1.25)HOUSING	119
-	REF	REF	REF	-	A	21045-3	RING,RET "C"(ø.187)FD FING PIN	118
-	1	1	1	-	A	21024-5	WASHER, LOCK(#10)ADJ BLOCK	117
-	REF	REF	REF	-	A	21024-5	WASHER,LOCK(#10)ADJ PLATE	116
-	REF	REF	REF	-	A	21024-5	WASHER,LOCK(#10)FEED GDE ROD	115
								114
-	REF	REF	REF	-	A	5-21028-1	PIN,SLT SPR(ø.125x.50)ADJ ROD	113
								112
-	4	4	4	-	A	21024-4	WASHER,LOCK(#8)STRIPPER	111
-	REF	REF	REF	-	A	21899-4	WASHER,FLAT(ø5/16)SCREW ADJ	110
								109
-	1	1	1	-	A	21018-5	NUT,HEX(NO.6)HOLDDOWN	108
-	REF	REF	REF	-	A	21068-5	NUT,HEX(6-32)FEED ADJ	107
								106
								105
								104
-	1	1	1	-	A	21009-2	SCR,SKT SET(1/4-20x.25 LW)RAM	103
-	2	2	2	-	A	21017-2	SCR,DRIVE(#2x.19)ID PLATE	102
-	REF	REF	REF	-	A	6-23715-5	SCR,PAN HD(6-32x1.50)FEED ADJ	101
-	1	1	1	-	B	461264-1	PLATE, IDENTIFICATION	100
								99
-	1	1	1	-	A	22733-8	SCR,BHC(8-32x.38 LW)ANVIL	98
-	REF	REF	REF	-	A	2-21002-9	SCR,BHC(10-32x.75)CAP	97
-	REF	REF	REF	-	A	2-22733-8	SCR,BHC(1/4-20x.62)HOUSING	96
-	REF	REF	REF	-	A	2-21002-7	SCR,BHC(10-32x.50)SG ADJ BLOCK	95
-	4	4	4	-	A	2-21002-2	SCR,BHC(8-32x.50)TERM H DWN	94
-	2	2	2	-	A	2-21002-4	SCR,BHC(8-32x.75)R STP GDE	93
-	1	1	1	-	A	1-21003-9	SCR,FHC(6-32x.38)DEP	92
-	1	1	1	-	A	1-21002-7	SCR,BHC(6-32x.38)CAM	91
								90
								89
								88
-	2	2	2	-	A	2-21000-8	SCR,SHC(8-32x.62)DEP-HOLD	87
-	1	1	1	-	A	2-22603-0	SCR,HEX HD(8-32x.31)FEED FINGER	86
								85
-	1	1	1	-	A	2-21000-7	SCR,SHC(8-32x.50)STRIPPER	84
-	REF	REF	REF	-	A	3-21000-7	SCR,SHC(10-32x.75)FEED ROD GD	83
-	REF	REF	REF	-	A	3-21000-6	SCR,SHC(10-32x.62)FD ADJ BLK	82
-	1	1	1	-	A	3-21000-4	SCR,SHC(10-32x.38)SG ADJ BL	81
-	REF	REF	REF	-	A	3-21000-4	SCR,SHC(10-32x.38)PIVOT BLK	80
△3 -	-	REF	-	-	B	455749-1	GUARD, WINDOW	79
△3 -	REF	-	-	-	B	679532-1	INSERT, GUARD	78
								77
								76
								75
-	1	1	1	-	A	690603-1	SPRING, ASSIST	74
-	1	1	1	-	A	23030-1	SCR,SHC(6-32x.25 SL)INS DISC	73
-	REF	REF	REF	-	A	458109-1	WASHER, SPECIAL	72
-	REF	REF	REF	-	A	690517-1	SPACER	71

QTY REQD PER ASSY — PARTS LIST

-77	-3	-2	-1	U/M	DWG SIZE	PART NO	DESCRIPTION	ITEM NO
-	REF	REF	REF	-	B	22594-8	NUT,HEX(1/2-20)	70
-	REF	REF	REF	-	B	240628-1	PLATE, ADJUSTMENT	69
-	REF	REF	REF	-	B	240626-1	SHAFT, PIVOT	68
-	REF	REF	REF	-	B	240633-1	BUSHING	67
-	REF	REF	REF	-	A	455680-1	LEVER, INTERMEDIATE	66
-	REF	REF	REF	-	B	240629-1	BLOCK, PIVOT	65
-	REF	REF	REF	-	A	240632-2	SCREW, ADJ FEED ROD	64
-	REF	REF	REF	-	B	240659-3	PIN, CAM ROLLER	63
-	REF	REF	REF	-	B	240658-1	ROLLER, CAM	62
-	REF	REF	REF	-	B	454398-2	ROD, FEED	61
-	REF	REF	REF	-	A	454178-1	GUIDE, FEED ROD	60
-	REF	REF	REF	-	C	454220-1	CAP, RAM	59
-	REF	REF	REF	-	D	454485-1	HOUSING	58
								57
-	1	1	1	-	B	458537-2	PAWL, FEED	56
-	REF	REF	REF	-	B	240624-1	PIN, FEED FINGER	55
-	REF	REF	REF	-	B	691499-1	SPRING, FEED FINGER	54
-	REF	REF	REF	-	B	690541-1	HOLDER, FEED FINGER	53
-	REF	REF	REF	-	A	455679-1	LEVER, TERMINAL FEED ARM	52
-	1	1	1	-	A	811242-2	BUMPER, HOLDDOWN	51
-	1	1	1	-	A	690753-1	SPACER, TONKER	50
-	1	-	-	-	B	690602-6	CAM, PRE-FEED 1 5/8 ST	49
-	-	1	-	-	B	690602-5	CAM, PRE-FEED 1 1/8 ST	48
-	-	-	1	-	B	690501-4	CAM, POST-FEED 1 5/8 ST	47
-	1	1	1	-	B	459456-1	APPLICATOR, BASIC (SUBASSY)	46
-	1	1	1	-	A	690191-1	PLUG, NYLON	45
-	1	1	1	-	C	819307-4	RAM	44
-	1	1	1	-	A	690125-1	WASHER, LAMINATED	43
-	1	1	1	-	A	690124-1	WASHER, RAM	42
-	1	1	1	-	A	7-21002-9	BOLT, CRIMPER(5/16x1.00)	41
-	1	1	1	-	A	23241-6	BALL, STEEL	40
-	1	1	1	-	A	690170-1	SPRING, COMPRESSION	39
-	1	1	1	-	C	1-690142-1	DISC, INSULATION	38
-	1	1	1	-	D	354777-1	DISC, WIRE	37
-	1	1	1	-	A	22480-5	WASHER, SPRING	36
-	1	1	1	-	B	690212-1	POST, RAM	35
-	1	1	1	-	B	1-690786-2	SUPPORT, TERMINAL	34
-	REF	REF	REF	-	D	455675-1	PLATE, BASE	33
								32
-	1	1	1	-	B	1320908-8	SPACER, STRIP GUIDE	31
-	REF	REF	REF	-	B	455689-1	BLOCK, STRIP GUIDE ADJ	30
-	1	1	1	-	C	1633091-1	PLATE, STRIP GUIDE	29
-	1	1	1	-	C	1-455888-0	SPACER, FRONT SHEAR DEP	28
								27
								26
								25
-	1	1	1	-	D	1320928-1	GUIDE, STRIP (REAR)	24
								23
-	-	-	1	-	B	690472-2	STRIPPER	22
-	REF	REF	REF	-	A	4-22284-9	SPRING, FEED RETURN	21
								20
-	1	1	-	-	B	690472-9	STRIPPER	19
								18
								17
-	1	1	1	-	B	318563-1	GUARD, CHIP, FRONT	16
								15
								14
								13
-	1	1	1	-	A	5-22280-0	SPRING, SHEAR	12
-	1	1	1	-	B	690461-2	STOP, SHEAR	11
-	1	1	1	-	C	1-690459-0	HOLDER, SHEAR (FRONT)	10
△1 -	1	1	1	-	C	318707-3	SHEAR, FLOAT (FRONT)	9
△1 1	1	1	1	-	C	1633330-1	ANVIL	8
-	1	1	1	-	C	2-240641-4	SPACER, DEPRESSOR (REAR)	7
								6
-	1	1	1	-	C	318701-1	DEPRESSOR, SHEAR (FRONT)	5
-	1	1	1	-	B	1-238011-9	SPACER, BLOCK CRIMPER	4
△1 1	1	1	1	-	C	3-1583690-9	CRIMPER, INSULATION	3
-	1	1	1	-	C	1-455888-9	SPACER, CRIMPER	2
△1 1	1	1	1	-	C	1633305-6	CRIMPER, WIRE	1

QTY REQD PER ASSY — PARTS LIST

← REVISION OF EACH ASSY NO (WHEN BLANK, USE DWG REVISION)

POST FEED 1 5/8 STROKE — ROTATED 180°

PRE FEED 1 1/8 STROKE — ROTATED 180°

PRE FEED 1 5/8 STROKE — ROTATED 180°

K TERMINATOR

G TERMINATOR

LEADMAKER & BENCH MACHINE

△1 RECOMMENDED SPARE PARTS.

△2 GREASE LIGHTLY.

△3 GUARD MUST BE IN PLACE WHEN OPERATING APPLICATOR IN A BENCH MACHINE.

△4 LUBRICATE DAILY USING NO. 20 MACHINE OIL.

5. ITEMS WITH QTY OF REF SPECIFIED (EXCEPT ITEMS 78 AND 79) ARE USED ON ITEM 46.

△6 THIS APPLICATOR APPLIES TERMINAL WITH A SEAL.

△7 APPLY TORQ-SEAL IN ALLEN SOCKET TO FILL HOLE AFTER FLAT HD HAS BEEN ADJUSTED TO CORRECT HEIGHT AT QUALIFICATION. APPLY PN 1-23419-5 LOC-TITE TO THREADS.

P	F	LTR	REVISION RECORD	APP	DATE
		A	RELEASED	RK	AUG05

DIMENSIONS IN INCHES. DO NOT SCALE PRINT. TOLERANCES UNLESS OTHERWISE SPECIFIED: 2 PLC DEC ±- 3 PLC DEC ±- 4 PLC DEC ±- ANGLES ±- SURF TEXTURE, √ REMOVE BURRS, BREAK SHARP EDGES R.015 MAX

MATL – | HT TR – | FIN –

DR 30JUN05 R. KNEPPER | APP 30JUN05 T.ELBIN

CHK 04AUG05 T.ELBIN | REL 04AUG05 R.KNEPPER

AMP — Tyco Electronics, Harrisburg, PA 17105-3608

NAME SIDE FEED HDM APPLICATOR | MACHINE REF MINI APPL

SCALE – | D | DWG NO 1852072 | SHEET 1 OF 1 | REV A

CAGE CODE 00779 | CUSTOMER AND ASSEMBLY DRAWING | RESTRICTED TO –

LOC A | DIST 66

THIS DRAWING IS A CONTROLLED DOCUMENT.
RELEASED FOR PUBLICATION AUGUST 04,2005.
BY AMP INCORPORATED. ALL RIGHTS RESERVED.
© COPYRIGHT 2005

Mouser Electronics

Authorized Distributor

Click to View Pricing, Inventory, Delivery & Lifecycle Information:

TE Connectivity:

1852072-2