LBN150B01

150 mA LOAD SWITCH FEATURING COMPLEMENTARY BIPOLAR TRANSISTORS

NEW PRODUCT

General Description

- LMN150B01 is best suited for applications where the load needs to be turned on and off using control circuits like micro-controllers, comparators etc. particularly at a point of load. It features a discrete PNP pass transistor with stable V_{ce_sat} which does not depend on the input voltage and can support maximum continuous current of 150 mA up to 125 °C (see fig. 1). It also contains a discrete NPN that can be used as a control. The component devices can be used as a part of a circuit or as standalone discrete devices.

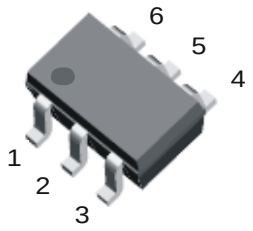

SOT-26

Features

- Epitaxial Planar Die Construction
- Ideally Suited for Automated Assembly Processes
- **Lead Free By Design/ROHS Compliant (Note 1)**
- **"Green" Device (Note 2)**

Mechanical Data

- Case: SOT-26
- Case Material: Molded Plastic. "Green Molding" Compound. UL Flammability Classification Rating 94V-0
- Moisture Sensitivity: Level 1 per J-STD-020C
- Terminal Connections: See Diagram
- Terminals: Finish - Matte Tin annealed over Copper leadframe. Solderable per MIL- STD -202, Method 208
- Marking Information: See Page 6
- Ordering Information: See Page 6
- Weight: 0.016 grams (approximate)

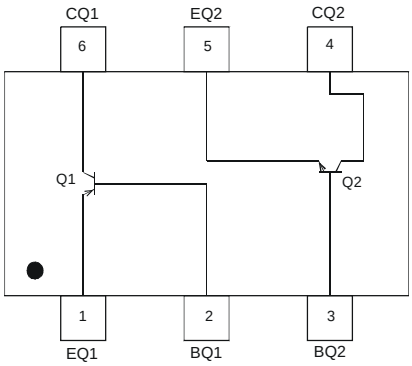

Schematic and Pin Configuration

Maximum Ratings, Total Device @T_A = 25°C unless otherwise specified

Characteristic	Symbol	Value	Unit
Output Current	I_{out}	150	mA

Thermal Characteristics @T_A = 25°C unless otherwise specified

Characteristic	Symbol	Value	Unit
Power Dissipation (Note 3)	P_D	300	mW
Power Derating Factor above 120 °C	P_{der}	2.33	mW/°C
Thermal Resistance, Junction to Ambient Air (Note 3) (Equivalent to one heated junction of PNP transistor)	$R_{\theta JA}$	417	°C/W
Junction Operation and Storage Temperature Range	T_J, T_{STG}	-55 to +150	°C

Notes:
1. No purposefully added lead.
2. Diodes Inc.'s "Green" policy can be found on our website at http://www.diodes.com/products/lead_free/index.php.
3. Device mounted on FR-4 PCB, 1 inch x 0.85 inch x 0.062 inch; pad layout as shown on Page 7.

© Diodes Incorporated

NEW PRODUCT

Maximum Ratings: Discrete PNP Transistor (Q1) @T_A = 25°C unless otherwise specified

Characteristic	Symbol	Value	Unit
Collector-Base Voltage	V_{CBO}	-40	V
Collector-Emitter Voltage	V_{CEO}	-40	V
Emitter-Base Voltage	V_{EBO}	-6	V
Output Current - continuous (Note 4)	I_C	-200	mA

Maximum Ratings: Discrete NPN Transistor (Q2) @T_A = 25°C unless otherwise specified

Characteristic	Symbol	Value	Unit
Collector-Base Voltage	V_{CBO}	60	V
Collector-Emitter Voltage	V_{CEO}	40	V
Emitter-Base Voltage	V_{EBO}	6	V
Output Current - continuous (Note 4)	I_C	200	mA

Electrical Characteristics: Discrete PNP Transistor (Q1) @T_A = 25°C unless otherwise specified

Characteristic	Symbol	Min	Max	Unit	Test Condition
OFF CHARACTERISTICS (Note 4)					
Collector-Base Breakdown Voltage	V_{CBO}	-40	—	V	I_C = -10uA, I_E = 0
Collector-Emitter Breakdown Voltage	V_{CEO}	-40	—	V	I_C = -1.0mA, I_B = 0
Emitter-Base Breakdown Voltage	V_{EBO}	-6	—	V	I_E = -10μA, I_C = 0
Collector Cutoff Current	I_{CEX}	—	-50	nA	V_{CE} = -30V, $V_{EB(OFF)}$ = -3.0V
Base Cutoff Current	I_{BL}	—	-50	nA	V_{CE} = -30V, $V_{EB(OFF)}$ = -3.0V
Collector-Base Cut Off Current	I_{CBO}	—	-50	nA	V_{CB} = -30V, I_E = 0
Collector-Emitter Cut Off Current	I_{CEO}	—	-50	nA	V_{CE} = -30V, I_B = 0
Emitter-Base Cut Off Current	I_{EBO}	—	-50	nA	V_{EB} = -5V, I_C = 0
ON CHARACTERISTICS (Note 4)					
DC Current Gain	h_{FE}	105	—	—	V_{CE} = -1V, I_C = -100 μA
		110	—	—	V_{CE} = -1V, I_C = -1 mA
		120	—	—	V_{CE} = -1V, I_C = -10 mA
		90	—	—	V_{CE} = -1V, I_C = -50 mA
		32	—	—	V_{CE} = -1V, I_C = -100 mA
		10	—	—	V_{CE} = -1V, I_C = -200 mA
Collector-Emitter Saturation Voltage	$V_{CE(SAT)}$	—	-0.08	V	I_C = - 10 mA, I_B = -1 mA
		—	-0.15		I_C = -50mA, I_B = -5mA
		—	-0.5		I_C = -200mA, I_B = -20mA
Equivalent on-resistance	$R_{CE(SAT)}$	—	2.5	Ω	I_C = -200mA, I_B = -20mA
Base-Emitter Turn-on Voltage	$V_{BE(ON)}$	—	-0.92	V	V_{CE} = -5V, I_C = -200mA
Base-Emitter Saturation Voltage	$V_{BE(SAT)}$	—	-0.95	V	I_C = -10mA, I_B = -1mA
		—	-1.1		I_C = -50mA, I_B = -5mA
SMALL SIGNAL CHARACTERISTICS					
Output Capacitance	C_{OBO}	—	4	pF	V_{CB} = -5.0 V, f = 1.0 MHz, I_E = 0
Input Capacitance	C_{IBO}	—	8	pF	V_{EB} = -5.0 V, f = 1.0 MHz, I_C = 0
Input Impedance	h_{IE}	2	12	K Ω	V_{CE} = 1.0V, Ic = 10mA, f = 1.0 KHz
Voltage Feedback ratio	h_{RE}	0.1	10	x 10E-4	
Small Signal Current Gain	h_{FE}	100	400	—	
Output Admittance	h_{OE}	3	60	μS	
Current Gain-Bandwidth Product	f_T	250	—	MHz	V_{CE} = - 20V, I_C = -10mA, f = 100 MHz
Noise Figure	NF	—	4	dB	V_{CE} = - 5V, Ic = -100 uA, R_s = 1Ω, f =1 KHz
SWITCHING CHARACTERISTICS					
Delay Time	t_d	—	35	ns	V_{CC} = -3.0 V, I_C = -10 mA,
Rise Time	t_r	—	35	ns	$V_{BE(OFF)}$ = 0.5V, I_{B1} = -1.0 mA
Storage Time	t_s	—	225	ns	V_{CC} = -3.0 V, I_C = -10 mA,
Fall Time	t_f	—	75	ns	I_{B1} = I_{B2} = -1.0 mA

Notes: 4. Short duration pulse test used to minimize self-heating effect.

© Diodes Incorporated

NEW PRODUCT

Electrical Characteristics: Discrete NPN Transistor (Q2) @T_A = 25°C unless otherwise specified

Characteristic	Symbol	Min	Max	Unit	Test Condition
OFF CHARACTERISTICS (Note 4)					
Collector-Base Breakdown Voltage	V_{CBO}	60	—	V	I_C = 10uA, I_E = 0
Collector-Emitter Breakdown Voltage	V_{CEO}	40	—	V	I_C = 1.0mA, I_B = 0
Emitter-Base Breakdown Voltage	V_{EBO}	6	—	V	I_E = 10μA, I_C = 0
Collector Cutoff Current	I_{CEX}	—	50	nA	V_{CE} = 30V, $V_{EB(OFF)}$ = 3.0V
Base Cutoff Current	I_{BL}	—	50	nA	V_{CE} = 30V, $V_{EB(OFF)}$ = 3.0V
Collector-Base Cut Off Current	I_{CBO}	—	50	nA	V_{CB} = 30V, I_E = 0
Collector-Emitter Cut Off Current	I_{CEO}	—	50	nA	V_{CE} = 30V, I_B = 0
Emitter-Base Cut Off Current	I_{EBO}	—	50	nA	V_{EB} = 5V, I_C = 0
ON CHARACTERISTICS (Note 4)					
DC Current Gain	h_{FE}	150	—	—	V_{CE} = 1V, I_C = 100 μA
		170	—	—	V_{CE} = 1V, I_C = 1 mA
		160	—	—	V_{CE} = 1V, I_C = 10 mA
		70	—	—	V_{CE} = 1V, I_C = 50 mA
		30	—	—	V_{CE} = 1V, I_C = 100 mA
		12	—	—	V_{CE} = 1V, I_C = 200 mA
Collector-Emitter Saturation Voltage	$V_{CE(SAT)}$	—	0.08	V	I_C = 10 mA, I_B = 1 mA
		—	0.16		I_C = 50mA, I_B = 5mA
		—	0.36		I_C = 200mA, I_B = 20mA
Equivalent on-resistance	$R_{CE(SAT)}$	—	1.8	Ω	I_C = 200mA, I_B = 20mA
Base-Emitter Turn-on Voltage	$V_{BE(ON)}$	—	0.98	V	V_{CE} = 5V, I_C = 200mA
Base-Emitter Saturation Voltage	$V_{BE(SAT)}$	—	0.95	V	I_C = 10mA, I_B = 1mA
		—	1.1		I_C = 50mA, I_B = 5mA
SMALL SIGNAL CHARACTERISTICS					
Output Capacitance	C_{OBO}	—	4	pF	V_{CB} = 5.0 V, f = 1.0 MHz, I_E = 0
Input Capacitance	C_{IBO}	—	8	pF	V_{EB} = 5.0 V, f = 1.0 MHz, I_C = 0
Input Impedance	h_{IE}	2	12	K Ω	V_{CE} = 1.0V, Ic = 10mA, f = 1.0 KHz
Voltage Feedback ratio	h_{RE}	0.1	10	x 10E-4	
Small Signal Current Gain	h_{FE}	100	400	—	
Output Admittance	h_{OE}	3	60	μS	
Current Gain-Bandwidth Product	f_T	250	—	MHz	V_{CE} = 20V, I_C = 0mA, f = 100 MHz
Noise Figure	NF	—	4	dB	V_{CE} = 5V, Ic = 100 uA, R_S = 1Ω, f =1 KHz
SWITCHING CHARACTERISTICS					
Delay Time	t_d	—	35	ns	V_{CC} = -3.0 V, I_C = 10 mA,
Rise Time	t_r	—	35	ns	$V_{BE(OFF)}$ = 0.5V, I_{B1} = 1.0 mA

Typical Characteristics

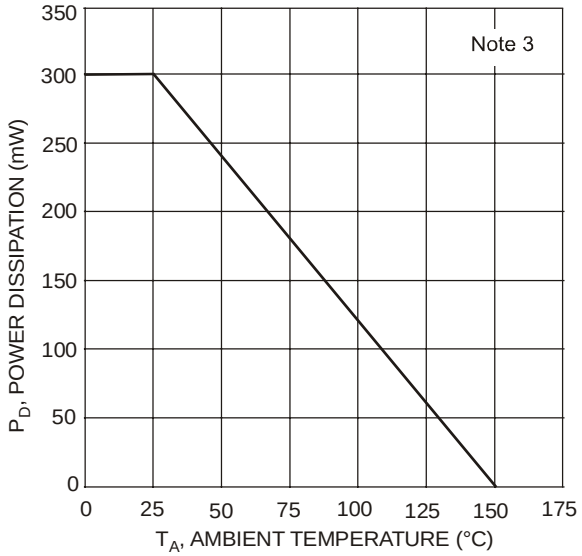

Fig. 1 Max Power Dissipation vs Ambient Temperature

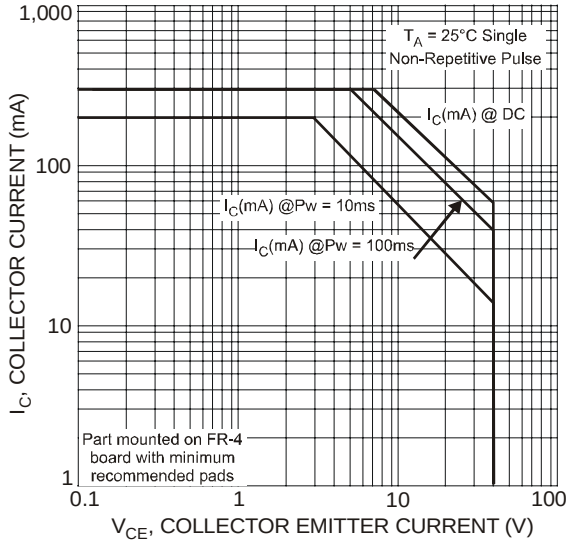

Fig. 2 Safe Operating Area

© Diodes Incorporated

Characteristics of NPN Transistor (Q2):

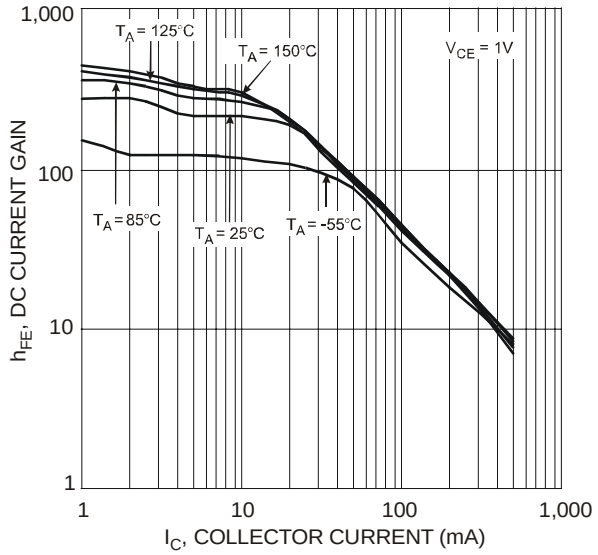

Fig. 3 Typical DC Current Gain vs. Collector Current

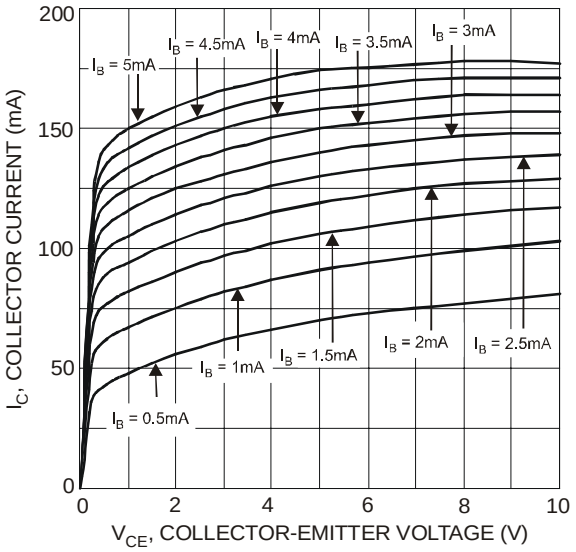

Fig. 4 Collector Current vs. Collector-Emitter Voltage

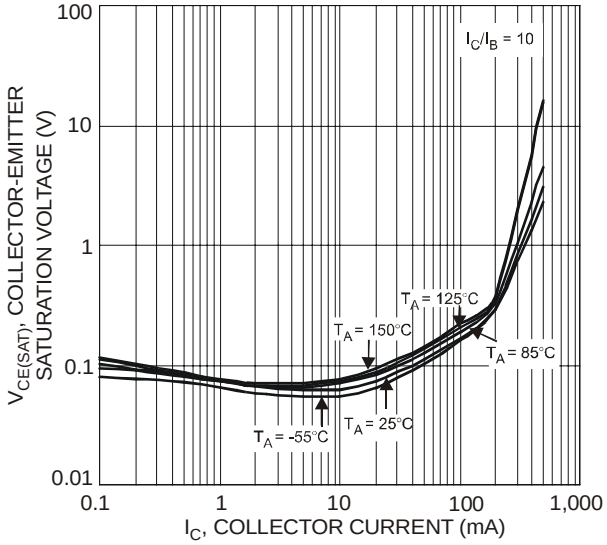

Fig. 5 Collector-Emitter Saturation Voltage vs. Collector Current

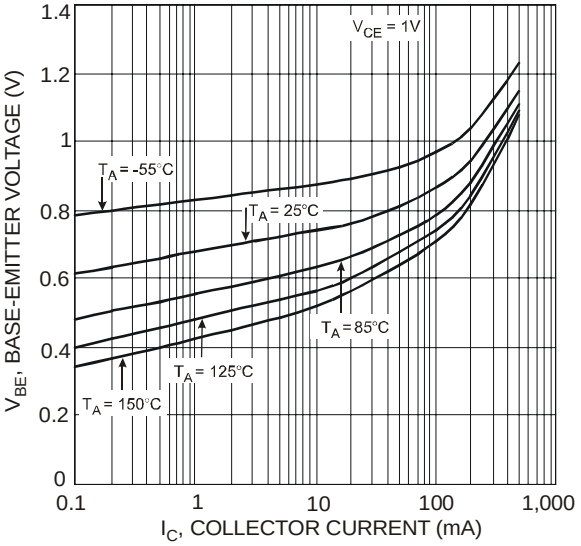

Fig. 6 Base-Emitter Turn-on Voltage vs. Collector Current

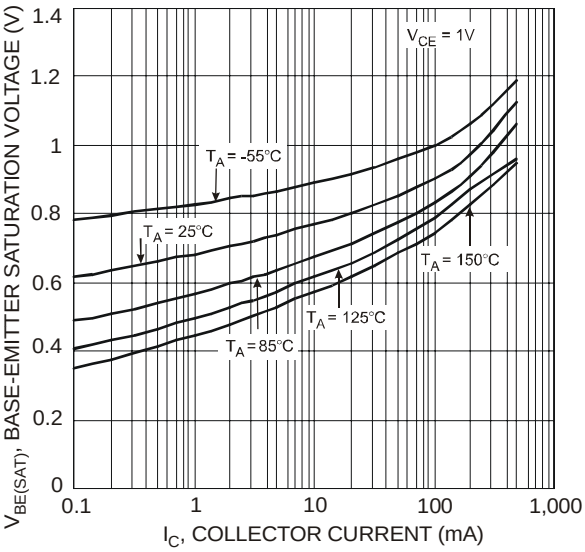

Fig. 7 Base-Emitter Saturation Voltage vs. Collector Current

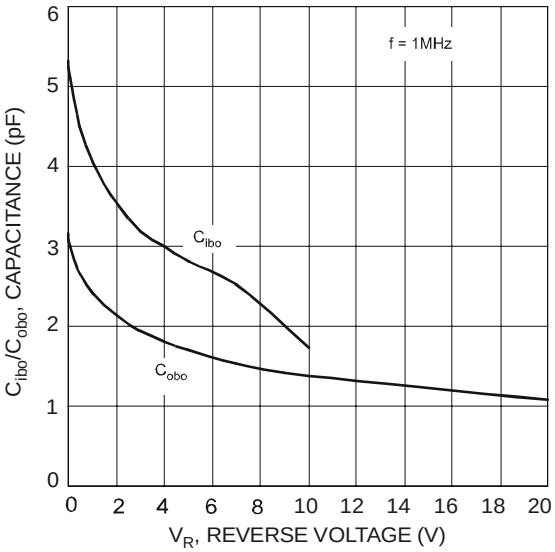

Fig. 8 Typical Capacitance Characteristics

© Diodes Incorporated

Characteristics of PNP Transistor (Q1):

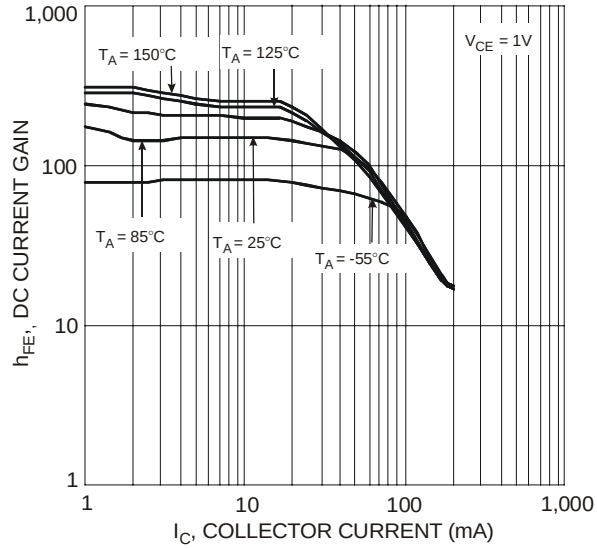

Fig. 9 Typical DC Current Gain vs. Collector Current

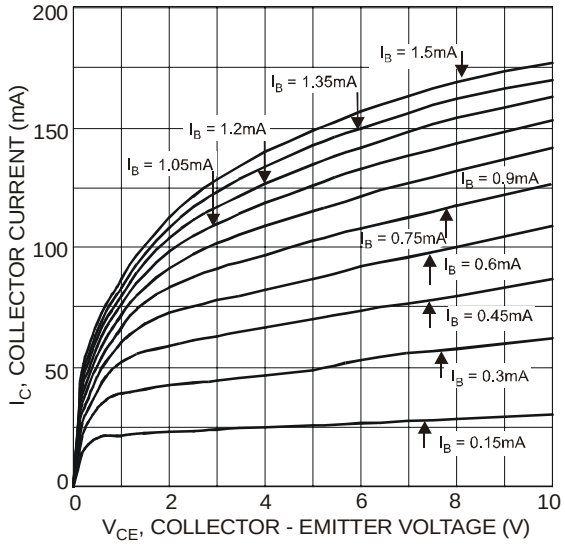

Fig. 10 Collector Current vs. Collector-Emitter Voltage

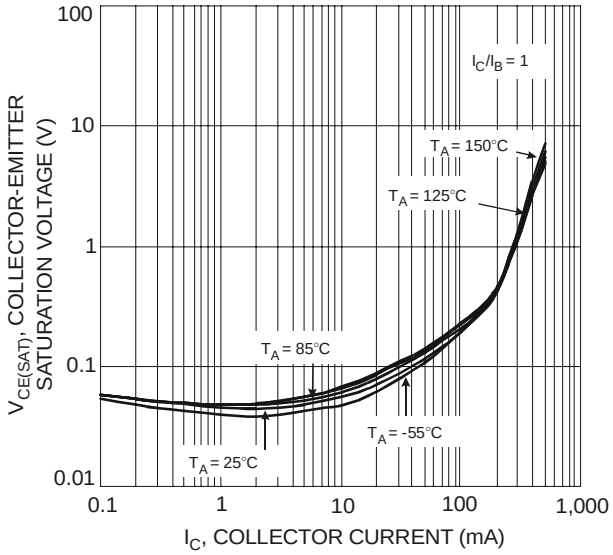

Fig. 11 Collector-Emitter Saturation Voltage vs. Collector Current

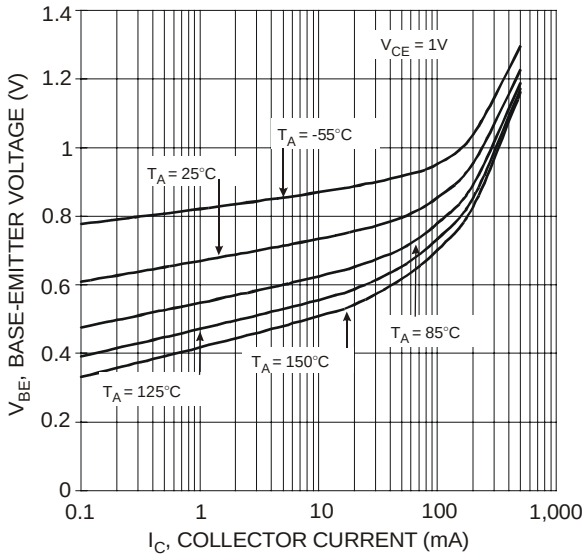

Fig. 12 Base-Emitter Turn-On Voltage vs. Collector Current

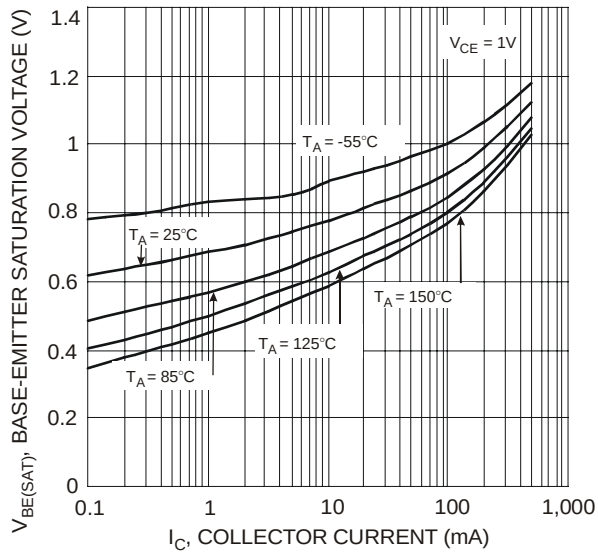

Fig. 13 Base-Emitter Saturation Voltage vs. Collector Current

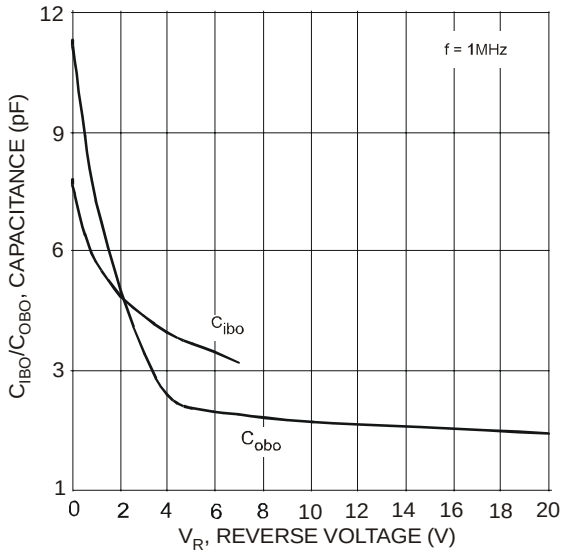

Fig. 14 Typical Capacitance Characteristics

© Diodes Incorporated

NEW PRODUCT

Application Details

- PNP Transistor and NPN Transistor integrated as one in LBN150B01 can be used as a discrete entity for general purpose applications or as a part of a circuit to function as a Load Switch. When it is used as the latter as shown in Example Circuit Schematic, various input voltage sources can be used as long as they do not exceed the maximum rating of the device. These devices are designed to deliver continuous output load current up to maximum of 150 mA. The use of the NPN as a switch eliminates the need for higher current required to overcome the gate charge in the event an N-MOSFET is used. Care must be taken for higher levels of dissipation while designing for higher load conditions. These devices provide power on demand and also consume less space. It mainly helps in optimizing power usage, thereby conserving battery life in a controlled load system like portable battery powered applications. (Please see Figure below for one example of typical application circuit used in conjunction with a voltage regulator as a part of power management system).

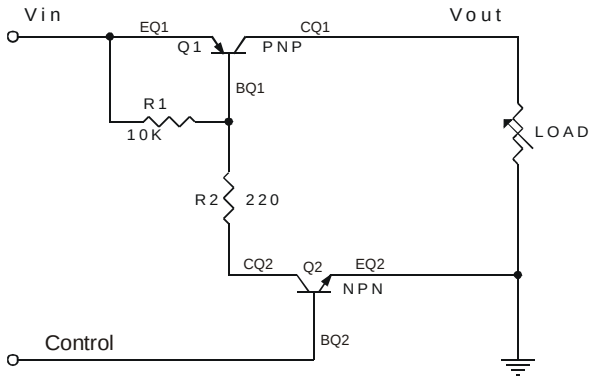

Example Circuit Schematic

Typical Application Circuit

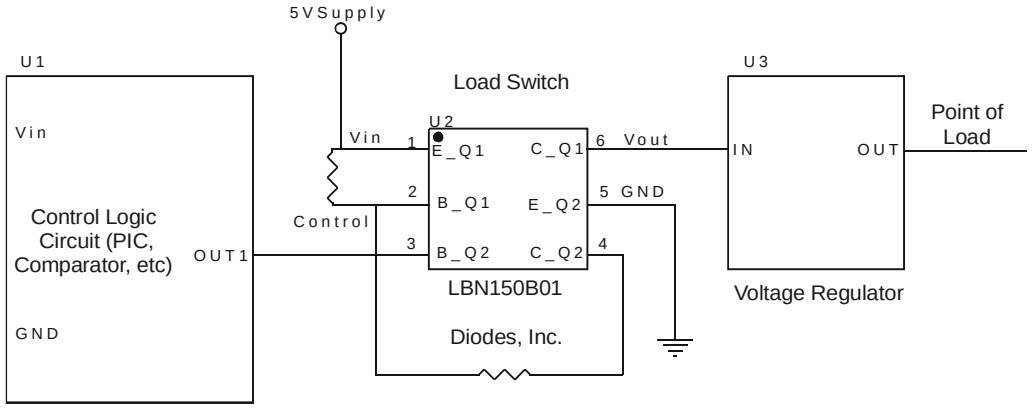

Ordering Information (Note 5)

Device	Marking Code	Packaging	Shipping
LBN150B01-7	PM4	SOT-26	3000/Tape & Reel

Notes: 5. For packaging details, go to our website at http://www.diodes.com/datasheets/ap02007.pdf.

Marking Information

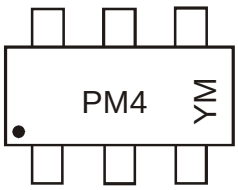

PM4 = Product Type Marking Code
YM = Date Code Marking
Y = Year ex: T = 2006
M = Month ex: 9 = September

Date Code Key

Year	2006	2007	2008	2009	2010	2011	2012
Code	T	U	V	W	X	Y	Z

Month	Jan	Feb	Mar	Apr	May	Jun	Jul	Aug	Sep	Oct	Nov	Dec
Code	1	2	3	4	5	6	7	8	9	O	N	D

© Diodes Incorporated

NEW PRODUCT

Package Outline Dimensions

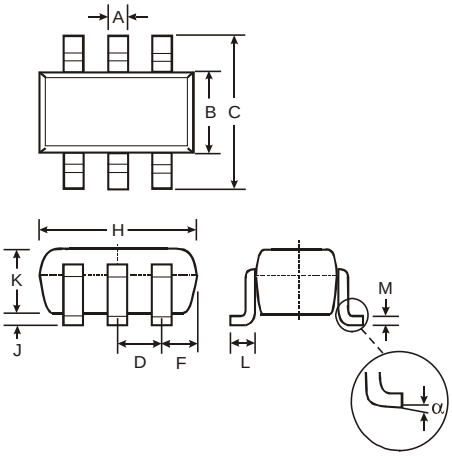

SOT-26			
Dim	**Min**	**Max**	**Typ**
A	0.35	0.50	0.38
B	1.50	1.70	1.60
C	2.70	3.00	2.80
D	—	—	0.95
F	—	—	0.55
H	2.90	3.10	3.00
J	0.013	0.10	0.05
K	1.00	1.30	1.10
L	0.35	0.55	0.40
M	0.10	0.20	0.15
α	0°	8°	—
All Dimensions in mm			

Suggested Pad Layout

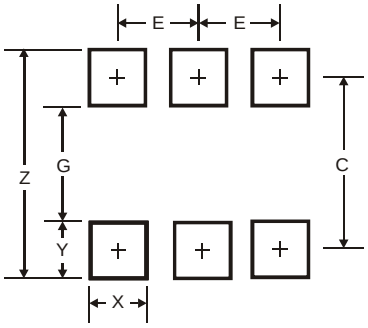

Dimensions	Value (in mm)
Z	3.20
G	1.60
X	0.55
Y	0.80
C	2.40
E	0.95

IMPORTANT NOTICE

Diodes Incorporated and its subsidiaries reserve the right to make modifications, enhancements, improvements, corrections or other changes without further notice to any product herein. Diodes Incorporated does not assume any liability arising out of the application or use of any product described herein; neither does it convey any license under its patent rights, nor the rights of others. The user of products in such applications shall assume all risks of such use and will agree to hold Diodes Incorporated and all the companies whose products are represented on our website, harmless against all damages.

LIFE SUPPORT

Diodes Incorporated products are not authorized for use as critical components in life support devices or systems without the expressed written approval of the President of Diodes Incorporated.

© Diodes Incorporated

Mouser Electronics

Authorized Distributor

Click to View Pricing, Inventory, Delivery & Lifecycle Information:

Diodes Incorporated:

LBN150B01-7