THIS DRAWING IS UNPUBLISHED. RELEASED FOR PUBLICATION ,19 .
© COPYRIGHT 19 BY AMP INCORPORATED. ALL RIGHTS RESERVED.

LOC	DIST
DF	DO

REVISIONS

P	LTR	DESCRIPTION	DATE	DWN	APVD
	F	REV PER 0G3D-0631-00 CT	7-01	CT	JM

1. THIS PLUG WILL MATE WITH ANY 78 POSN.,SIZE 5 RECEPTACLE IN AMPLIMITE SERIES.
2. THIS CONNECTOR ACCEPTS SIZE 22 PIN CONTACTS.
3. UL/CSA DESIGNATION STAMPED IN THIS AREA.
4. SOLDER DIP PER MIL-STD-2000 COMPOSITION Sn63 CONFORMING TO QQ-S-571. COVERAGE SHALL BE COMPLETE TO A DISTANCE OF .030 MAX. FROM REAR INSERT.
5. DIMENSION APPLIES PRIOR TO SOLDER DIPPING. ALLOW ADDITIONAL .030 POST PROJECTION AFTER SOLDER DIPPING.
6. REPLACEMENT CONTACT IS P/N 1-207683-2
7. TO INSTALL OR REMOVE CONTACTS USE AMP INSERTION/EXTRACTION TOOL PART NUMBER 91067-1 OR THE EQUIVALENT MIL NUMBER M81969/1-04.

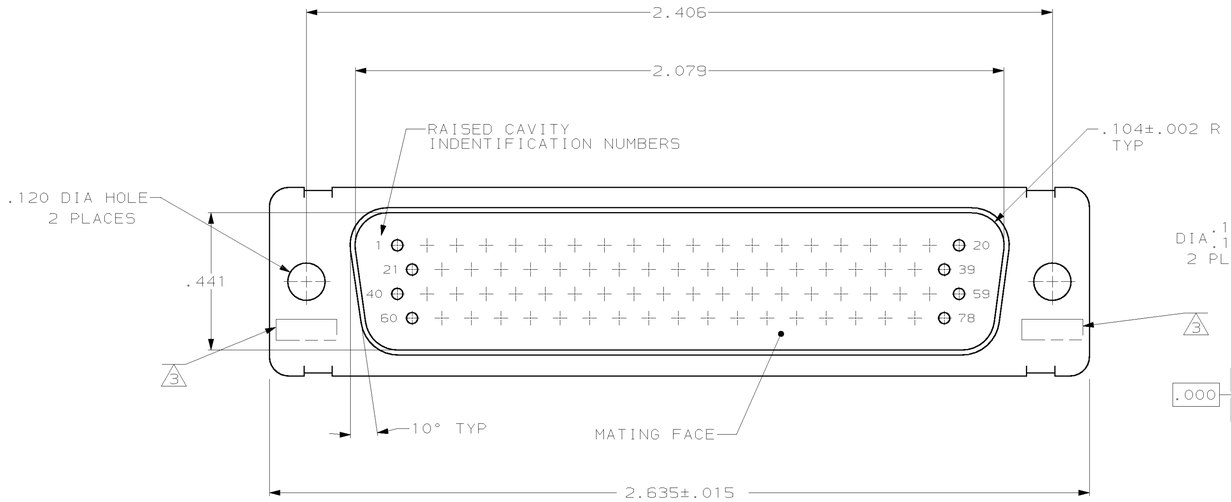

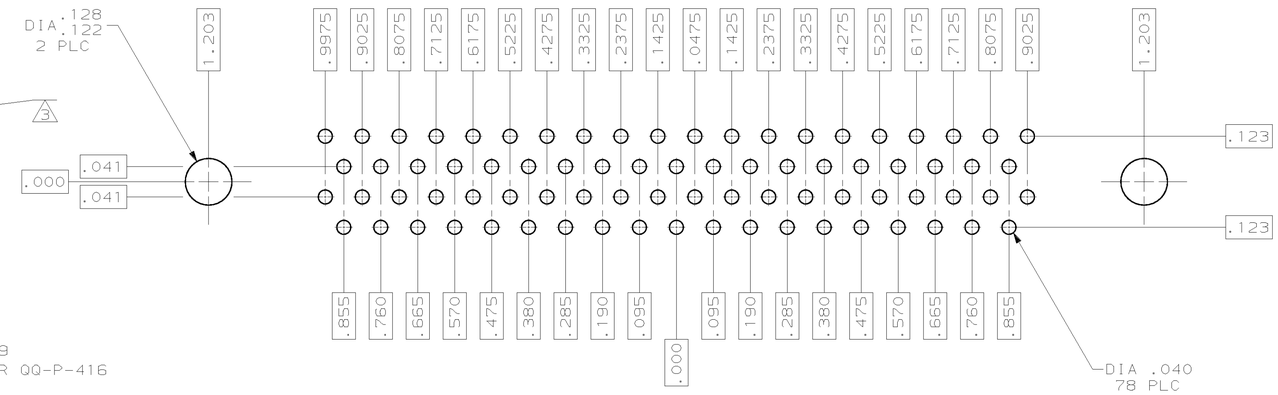

RECOMMENDED P.C. BOARD LAYOUT

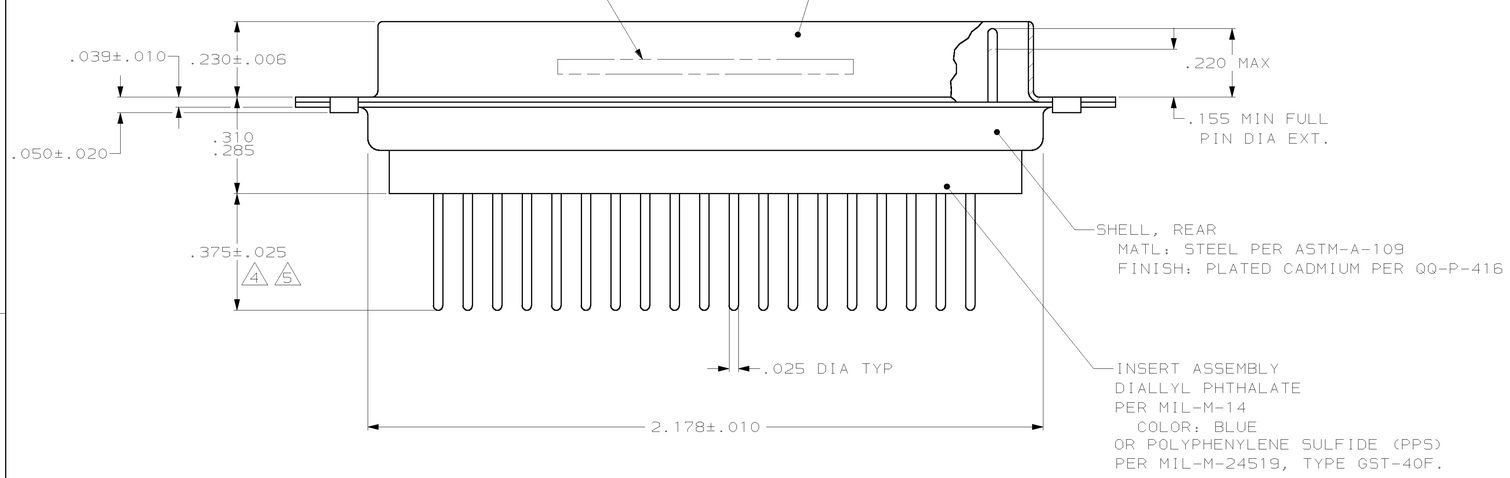

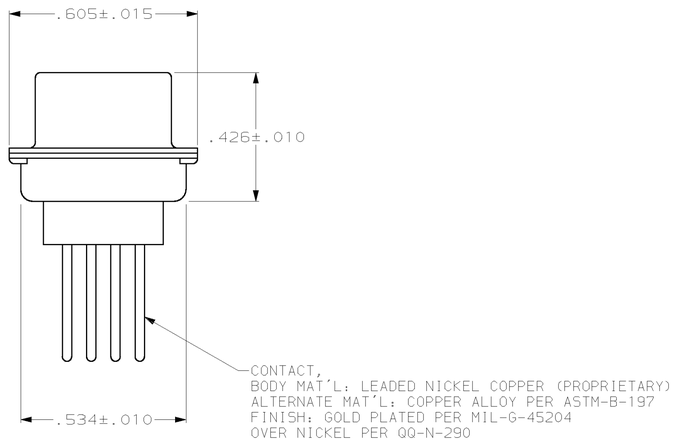

213334-1
PART NO

THIS DRAWING IS A CONTROLLED DOCUMENT.	DWN T. SHUEY 12-15-87	AMP Incorporated Harrisburg, PA 17105-3608
DIMENSIONS: Inches	CHK F. BALLEW III 12-21-87	
TOLERANCES UNLESS OTHERWISE SPECIFIED: 0 PLC ±- 1 PLC ±- 2 PLC ±- 3 PLC ±.005 4 PLC ±- ANGLES ±0°30'	APVD F. BALLEW III 12-21-87	NAME PLUG ASSEMBLY, AMPLIMITE, 78 POSITION, SIZE 5, SERIES 90, WITH LOADED CONTACTS, SPECIAL
	PRODUCT SPEC —	
	APPLICATION SPEC —	SIZE A1 · CAGE CODE 00779 · DRAWING NO C-213334 · RESTRICTED TO —
MATERIAL SEE CALLOUTS	FINISH SEE CALLOUTS · WEIGHT —	
	CUSTOMER DRAWING	SCALE 4:1 · SHEET 1 OF 1 · REV F

Mouser Electronics

Authorized Distributor

Click to View Pricing, Inventory, Delivery & Lifecycle Information:

TE Connectivity:

213334-1