THIS DRAWING IS UNPUBLISHED. RELEASED FOR PUBLICATION 20
© COPYRIGHT 20 BY TYCO ELECTRONICS CORPORATION, ALL RIGHTS RESERVED.

LOC	DIST
GP	00

REVISIONS

P	LTR	DESCRIPTION	DATE	DWN	APVD
	A	RELEASED	16MAY2008	RG	DO

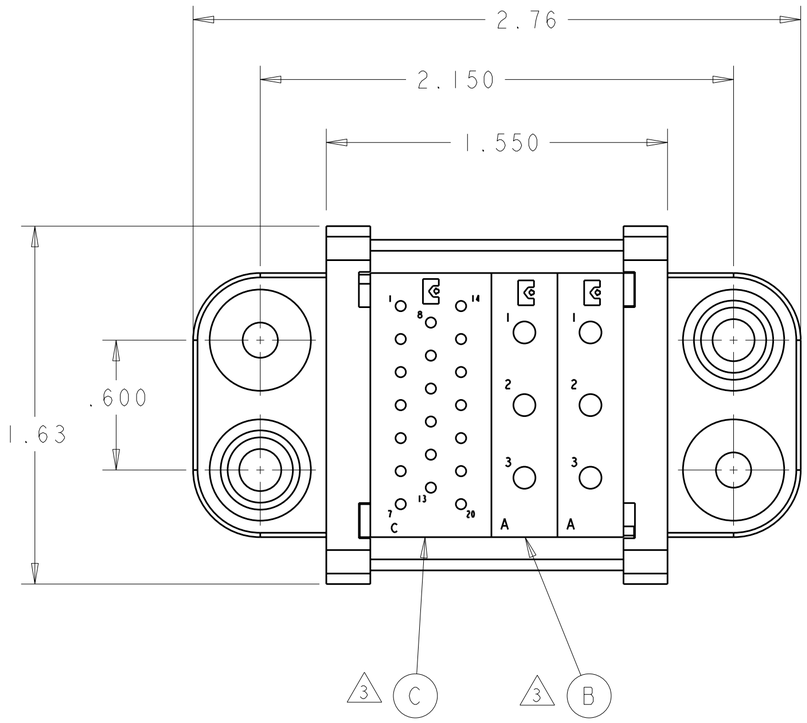

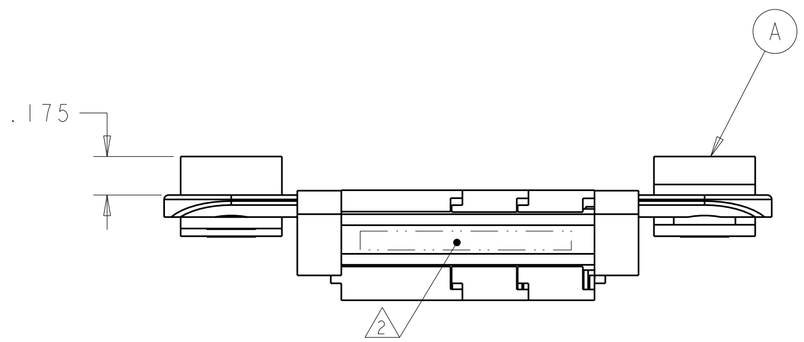

1. PART NUMBER CHANGES AND/OR DESIGN CHANGES AFFECTING ITEM INTERCHANGEABILITY REQUIRE PRIOR TYCO ELECTRONICS APPROVAL AND AUTHORIZATION BY REVISION TO THIS DRAWING.

2. ITEMS PROVIDED TO THIS SPECIFICATION TO BE PERMANENTLY IDENTIFIED PER THE FOLLOWING IDENTIFIER:

TYCO ELECTRONICS P/N — XXXXXXX-X

DATE CODE (e.g. 0212) — YEAR WEEK — XXXX

3. MODULES NOTED ARE FOR CRIMP REMOVABLE STYLE CONTACTS. ITEMS D AND E WILL BE PACKAGED AND SHIPPED LOOSE WITH THE CONNECTOR ASSEMBLY.

4. MOUNTING FLANGE BUSHING ACCEPTS 6/32 SCREW (.156 DIA. CLEARANCE HOLE, FLOAT MOUNT) OR 8/32 SCREW (.173 DIA. CLEARANCE HOLE, FIXED MOUNT), USER SUPPLIED.

-1	PART NO.	DESCRIPTION	ITEM NO.
20	1650155-1	PIN CONTACTS, CRIMP, SIZE No. 20	E
6	1766193-1	PIN CONTACTS, CRIMP, SIZE No. 12	D
1	1648463-1	MODULE "C"	C
2	1648461-1	MODULE "A"	B
2	6648252-1	END CAP, FLOAT MOUNT	A

THIS DRAWING IS A CONTROLLED DOCUMENT FOR TYCO ELECTRONICS CORPORATION. IT IS SUBJECT TO CHANGE AND THE CONTROLLING ENGINEERING ORGANIZATION SHOULD BE CONTACTED FOR THE LATEST REVISION.

DIMENSIONS: INCHES

TOLERANCES UNLESS OTHERWISE SPECIFIED:
0 PLC ±-
1 PLC ±-
2 PLC ±.02
3 PLC ±.010
4 PLC ±-
ANGLES ±3

MATERIAL -
FINISH -

DWN R.GRZYBOWSKI 23APR2008
CHK D.ORRIS 23APR2008
APVD S.FLICKINGER 23APR2008
PRODUCT SPEC -
APPLICATION SPEC -
WEIGHT -

Tyco Electronics
Tyco Electronics
Harrisburg, PA 17105-3608

NAME
PIN CONNECTOR
DOMINO
W/ PANEL CUT OUT

SIZE	CAGE CODE	DRAWING NO	RESTRICTED TO
A2	00779	C-1926820	-

CUSTOMER DRAWING | SCALE 2:1 | SHEET 1 OF 2 | REV A

AMP 1471-9 REV 31MAR2000

Pro/ENGINEER DRAWING

THIS DRAWING IS UNPUBLISHED. RELEASED FOR PUBLICATION 20
© COPYRIGHT 20 BY TYCO ELECTRONICS CORPORATION, ALL RIGHTS RESERVED.

LOC	DIST
GP	00

REVISIONS

P	LTR	DESCRIPTION	DATE	DWN	APVD
	-	SEE SHEET 1	-	-	-

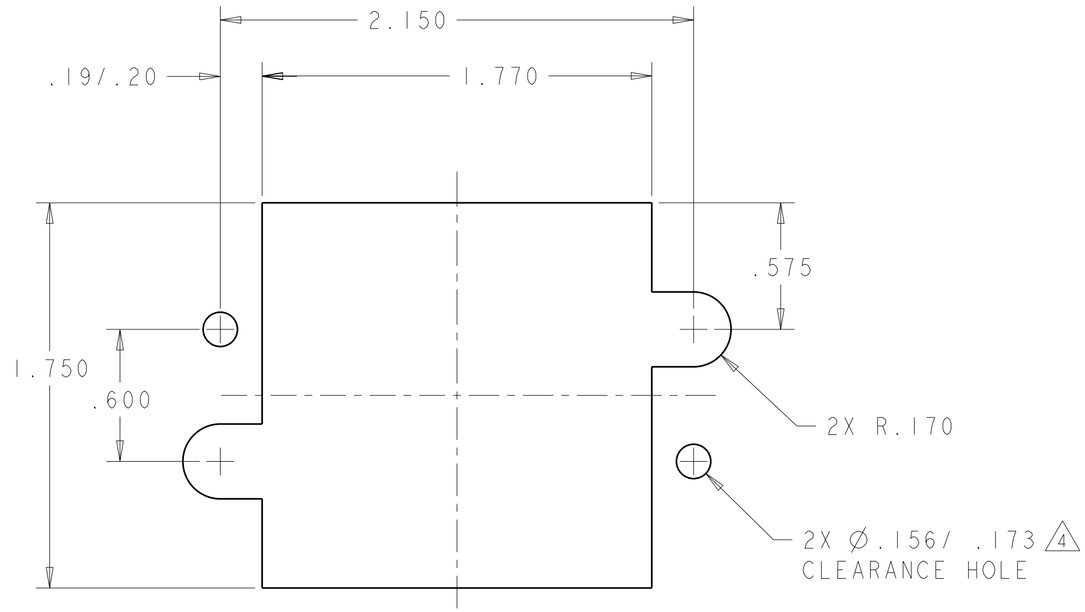

PIN PANEL MOUNT CUTOUT

COMPONENT SIDE

THIS DRAWING IS A CONTROLLED DOCUMENT FOR TYCO ELECTRONICS CORPORATION. IT IS SUBJECT TO CHANGE AND THE CONTROLLING ENGINEERING ORGANIZATION SHOULD BE CONTACTED FOR THE LATEST REVISION.

DIMENSIONS: INCHES

TOLERANCES UNLESS OTHERWISE SPECIFIED:

0 PLC	±-
1 PLC	±-
2 PLC	±.02
3 PLC	±.010
4 PLC	±-
ANGLES	±3

MATERIAL -

FINISH -

DWN 23APR2008 R.GRZYBOWSKI
CHK 23APR2008 D.ORRIS
APVD 23APR2008 S.FLICKINGER

PRODUCT SPEC -

APPLICATION SPEC -

WEIGHT -

Tyco Electronics

Tyco Electronics
Harrisburg, PA 17105-3608

NAME
PIN CONNECTOR
DOMINO
W/ PANEL CUT OUT

SIZE	CAGE CODE	DRAWING NO	RESTRICTED TO
A2	00779	C-1926820	-

CUSTOMER DRAWING

SCALE 2:1 SHEET 2 OF 2 REV A

Mouser Electronics

Authorized Distributor

Click to View Pricing, Inventory, Delivery & Lifecycle Information:

TE Connectivity:

1926820-1