THIS DRAWING IS UNPUBLISHED. RELEASED FOR PUBLICATION -,- .
© COPYRIGHT - TE Connectivity ALL RIGHTS RESERVED.

REVISIONS					
P	LTR	DESCRIPTION	DATE	DWN	APVD
	B1	REVISED PER ECO-17-002272	20JUN2017	SK	AS

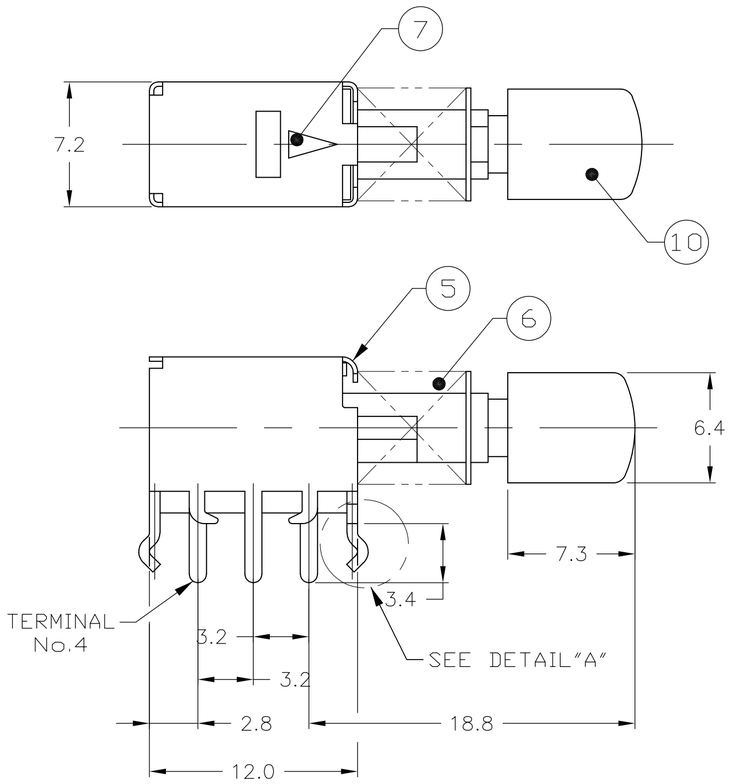

CIRCUIT DIAGRAM

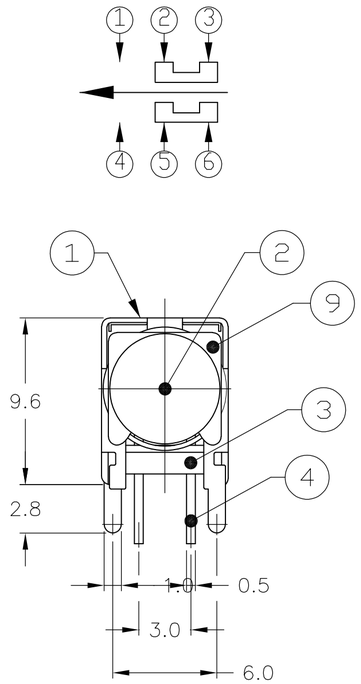

SPECIFICATIONS:

MATERIALS:
FRAME: STEEL
ACTUATOR: ACETAL
INSULATOR: PHENOL, BLUE
TERMINAL: COPPER ALLOY, SILVER PLATE
SPRING PLATE: COPPER ALLOY
COIL SPRING: PIANO WIRE
CAM STICK: COPPER ALLOY
CLIP: COPPER ALLOY, SILVER CLAD
SPRING STOPPER: STEEL
CAP: MATERIAL SPECIFICATION PER DRAWING # 11882

ELECTRICAL:
CONTACT RATING: 1 AMP @ 25 VDC (RESISTIVE LOAD)
INITIAL CONTACT RESISTANCE: 100 MILLIOHMS
CONTACT RESISTANCE: 300 MILLIOHMS MAX.
INSULATION RESISTANCE: 100 MEGOHMS MINIMUM @ 500 VDC
DIELECTRIC STRENGTH: 500 VAC FOR 1 MINUTE
CONTACT TIMING: NON SHORTING.

MECHANICAL:
OPERATING FORCE: 300 ±150 GRAMS
ACTUATOR TRAVEL: 2.3 MM (.091")
LIFE EXPECTANCY: 10,000 CYCLES

ENVIRONMENTAL:
OPERATING TEMPERATURE: −30°C TO +85°C (−22°F TO +185°F).

NOTES: UNLESS OTHERWISE SPECIFIED

1. INTERPRET DRAWING PER ASME Y14.5M 1994.
2. SEE AIDSHEET 91439F−1 FOR CAP PRESS FIT DETAILS.
3. BAR CODE LABELING: REFER TO AUGAT SPEC.304−09 & 304−10 FOR BAR CODE LABEL REQUIREMENTS.
4. PACKAGING: PLACE 4 BAGS OF 500 SWITCHES EACH IN ONE OUTER BOX. PLACE A CORRUGATED CARDBOARD SHEET IN BETWEEN EACH BAG AND ON TOP AND BOTTOM OF OUTER BOX BEFORE SEALING.
5. CAP SUPPLIED BY THOMAS & BETTS.

	CAP PART NO.	BUTTON COLOR	CUSTOMER PART NO.	AUGAT PART NO.
OBSLOETE	USR0	BLACK	1.021.163	~~JLS91439FKBC~~
	USR9	GRAY	1.021.081	~~JLS91439FK~~
	USR1	WHITE	1.036.0048−00	JLS91439FWC

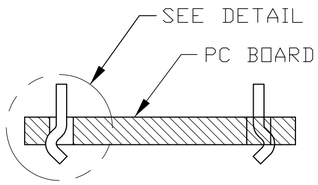

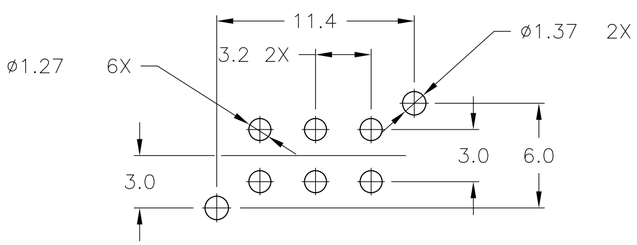

P.C.B. LAYOUT
TOLERANCES ±0,05

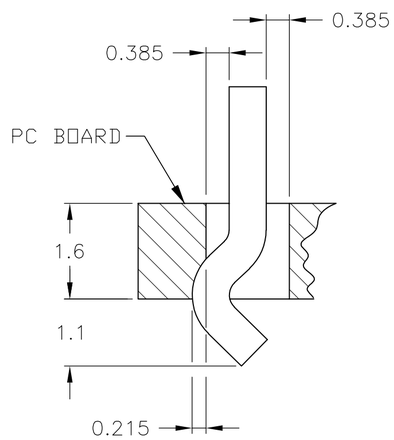

DETAIL B
SCALE 14:1

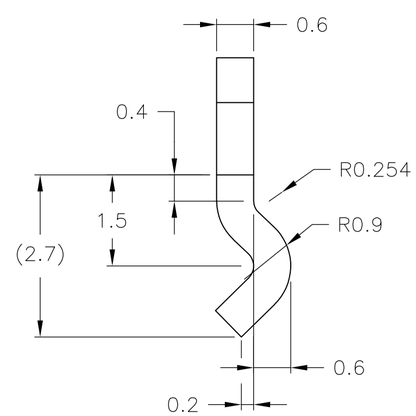

DETAIL A
SCALE 14:1
TOLERANCE: ±0,08

QTY.	DESCRIPTION	ITEM NO.
1	CAP	10
1	SPRING STOPPER	9
2	CLIP (NOT SHOWN)	8
1	CAM STICK	7
1	COIL SPRING	6
1	SPRING PLATE	5
1	TERMINAL	4
1	INSULATOR	3
1	ACTUATOR	2
1	FRAME	1

THIS DRAWING IS A CONTROLLED DOCUMENT.

DIMENSIONS: mm

TOLERANCES UNLESS OTHERWISE SPECIFIED:
0 PLC ± −
1 PLC ± −
2 PLC ± 0.25
3 PLC ± −
4 PLC ± −
ANGLES ± .5°

MATERIAL −
FINISH −

DWN M.BINNER 18JAN2006
CHK M.ZITTO 18JAN06
APVD M.ZITTO 18JAN06
PRODUCT SPEC —
APPLICATION SPEC —
WEIGHT 0.000000

TE Connectivity

NAME PUSH SWITCH, JLS SERIES
—
—

SIZE	CAGE CODE	DRAWING NO	RESTRICTED TO
A2	00779	C-1437566-7	—

CUSTOMER DRAWING | SCALE 1:1 | SHEET 1 OF 1 | REV B1

1437566-7

1471-9 (1/15)

Mouser Electronics

Authorized Distributor

Click to View Pricing, Inventory, Delivery & Lifecycle Information:

TE Connectivity:

1437566-9