THIS DRAWING IS A CONTROLLED DOCUMENT.

DWG NO 1054425-1

USED ON

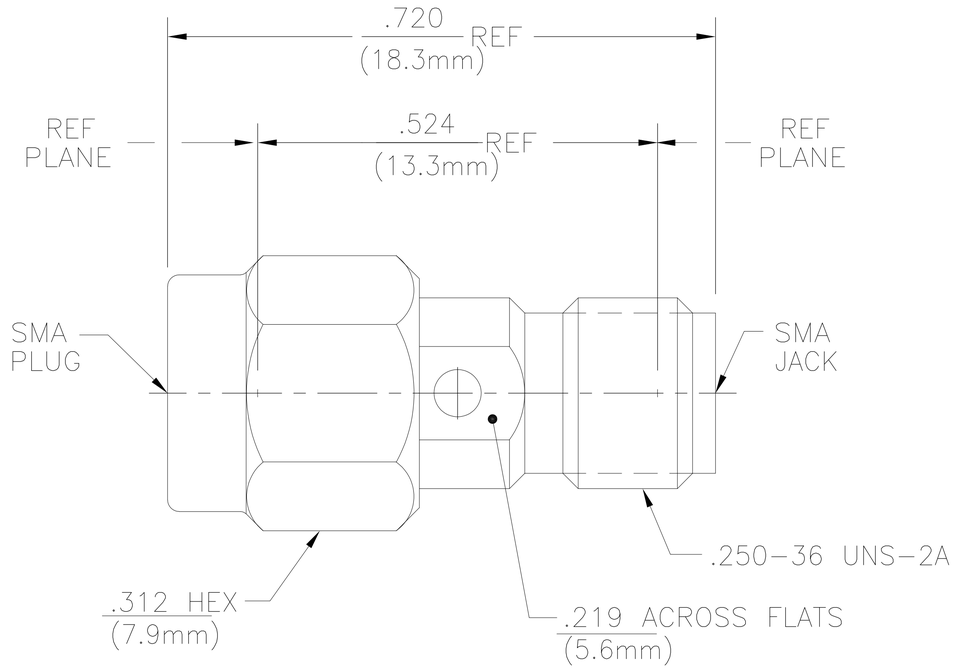

1054425-1
PART NUMBER

ELECTRICAL	MECHANICAL	ENVIRONMENTAL
Nominal Impedance (Ohms) 50	Interface Dimensions MIL-STD-348A	TEMPERATURE RATING -65°C TO 125°C
Frequency Range (GHz) DC to 18	Fig. 310.1 & 310.2	Vibration MIL-STD-202, Method
Volt Rating (VRMS MAX)	Recommended Mating	204, Condition D
@ Sea Level 335	Torque 7-10 in-Lb	Shock MIL-STD-202, Method 213,
VSWR 1.05 + .005f(GHz)	Mating Characteristics:	Condition I
Insertion Loss (dB MAX) .03 $\sqrt{f(GHz)}$	Insertion (MAX Lbs) 3	Thermal Shock MIL-STD-202,
RF Leakage (dB MIN) [-60-f(GHz)]	Withdrawal (MIN Oz) 1	Method 107, Condition B,
Corona, 70,000 Ft (VRMS MIN) 250	Force to Engage and	EXCEPT HIGH TEMP SHALL BE +155°C
Dielectric Withstanding Voltage	Disengage (In-Lbs MAX) 2	Moisture Resistance MIL-STD-202,
(VRMS MIN) @ Sea Level 1500	Center Contact Captivation	Method 106
Contact Resistance (Milliohms MAX)	Axial (Lbs) 6	Corrosion - MIL-STD-202, Method
Center Contact 4.0	Radial (In-Oz) 4	101, Condition B, 5% salt spray
Outer Contact 2.0	Coupling Proof Torque (In-Lbs MIN) 15	
Cable to Housing N/A	Coupling Mechanism Retention	
RF High Potential @ Sea Level	Force (Lbs MIN) 60	
(VRMS MIN @ 5 MHz) 670	Weight (Grams) TBD	
I.R.(Megohms MIN) 5,000		

COMPONENT	MATERIAL	FINISH
HOUSING COUPLING NUT	STAINLESS STEEL	GOLD PLATE PER OVER NICKEL PLATE
DIELECTRIC	PTFE	N/A
CENTER CONTACT	BERYLLIUM COPPER	GOLD PLATE .00005 IN MIN OVER NICKEL PLATE .00005 IN MIN OVER COPPER PLATE .00001 IN MIN
RETAINING RING	BERYLLIUM COPPER	N/A
GASKET	SILICONE RUBBER	N/A

P	LTR	REVISION RECORD	DATE	DWN	APVD
	B	REV PER ECO 08-027674	11/11/2008	DW	JO

DIMENSIONS: INCHES

TOLERANCES UNLESS OTHERWISE SPECIFIED:
0 PLC ± -
1 PLC ± -
2 PLC ± -
3 PLC ± .005
4 PLC ± -

ANGLES ± -
SURFACE TEXTURE √

DWN R.B.G	8/10/76	MATERIAL - -	HEAT TREAT - -
CHK R.M.F	8/11/76	Tyco Electronics	Tyco Electronics Corporation Harrisburg, PA 17105-3608
APVD RB	8/27/76	NAME SMA JACK TO PLUG ADAPTER (2082-5133-00)	
SCALE 10:1	SIZE A1	DRAWING NO 1054425-1	SHEET 1 OF 1 REV B

LOC AJ
DIST 00

THIS INFORMATION IS CONFIDENTIAL AND PROPRIETARY TO TYCO ELECTRONICS CORPORATION AND ITS WORLDWIDE SUBSIDIARIES AND AFFILIATES. IT MAY NOT BE DISCLOSED TO ANYONE OUTSIDE THE ORGANIZATION WITHOUT WRITTEN AUTHORIZATION FROM TYCO ELECTRONICS CORPORATION, HARRISBURG, PENNSYLVANIA USA.

3308-8 (1/08)

Mouser Electronics

Authorized Distributor

Click to View Pricing, Inventory, Delivery & Lifecycle Information:

TE Connectivity:

2082-5133-00