THIS DRAWING IS UNPUBLISHED. RELEASED FOR PUBLICATION -,- .
© COPYRIGHT - By - ALL RIGHTS RESERVED.

LOC	DIST
GP	00

REVISIONS

P	LTR	DESCRIPTION	DATE	DWN	APVD
	AE2	REVISED PER ECO-11-004835	11MAR11	RK	HMR

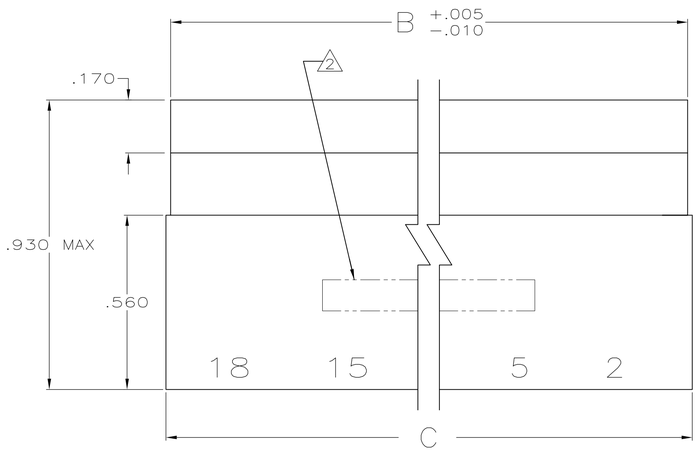

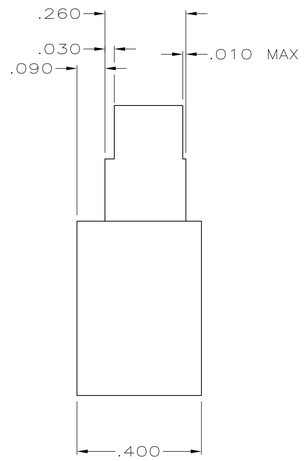

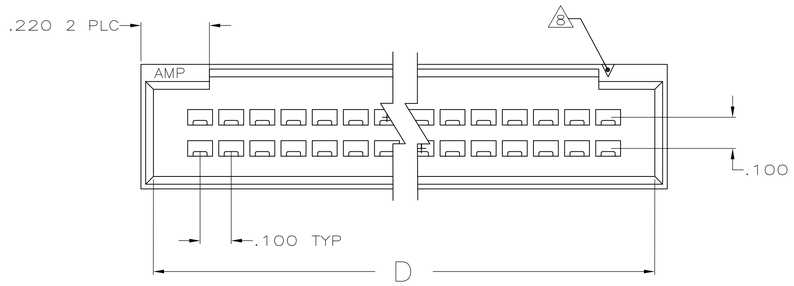

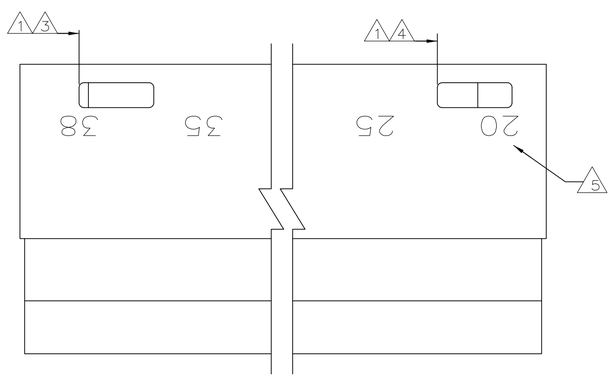

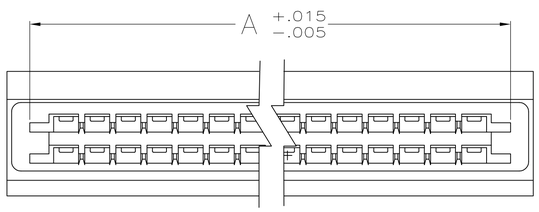

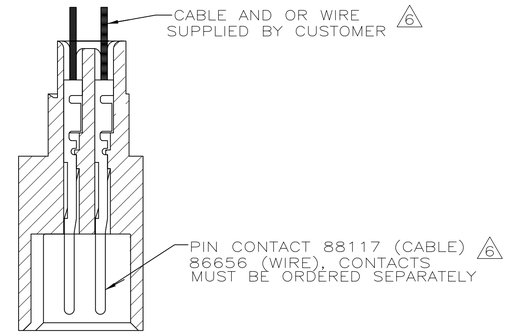

CRIMPED CONTACT SHOWN
FOR REF ONLY

1. DETENT SLOTS 6,10,12,16 & 18 POSN
ONE SLOT LOCATED AS FOLLOWS:
6 POSN CENTERLINE OF FIRST CIRCUIT FROM LEFT
10 AND 12 POSN CENTERLINE ON SECOND CIRCUIT FROM LEFT
16 POSN CENTERLINE OF THIRD CIRCUIT FROM LEFT
18 POSN CENTERLINE OF FORTH CIRCUIT FROM LEFT
20 POSN AND GREATER TWO DETENT SLOTS LOCATED AS SHOWN

2. PART NO. AND DATE CODE INK STAMPED, WHITE.

3. CENTERLINE OF FIRST CAVITY FROM LEFT

4. CENTERLINE OF THIRD CAVITY FROM RIGHT

5. CAVITY IDENTS INK STAMPED (WHITE), IN AREA SHOWN (SEE TABLE)

6. HOUSING WILL ACCOMMODATE FLEXIBLE FLAT CABLE .050 OR .062 WIDE CONDUCTORS ON .100 CENTERS (CABLE=.015 MAX THK) AND #22-#24 AWG WIRE WITH INSULATION RANGE OF .061 TO .069 DIA

7. THIS HOUSING IS DESIGNED TO MATE WITH FFC RECEPTACLE HOUSING AND AMP LATCH RECEPTACLE HOUSING

8. INDICATES POSITION 1, MAY BE RECESSED OR RAISED.

9. OBSOLETE PART NUMBER

10. SUPERSEDED BY AS MOLDED PART NUMBER.

11. GLASS-FILLED NYLON, BLACK, UL V-0.

12. OBSOLETE PARTS: OBSOLETE CIS STREAMLINING PER D.RENAUD/D.SINISI

9	3-88189-7	2,6	8,10,14	.900	.980	.950	.834	14	9 3-88189-8
9	3-88189-5	2,5,10,16	18,25,30,34	1.900	1.980	1.950	1.834	34	12 ~~3-88189-6~~
9	3-88189-3	2,5	7,10,12	.800	.880	.850	.734	12	12 ~~3-88189-4~~
9	3-88189-1	2	4,6	.500	.580	.550	.434	6	3-88189-2
12	~~2-88189-9~~	2,4	6,10	.700	.780	.750	.634	10	3-88189-0
9	2-88189-7	2,5,10,15,20,25,30,34	36,40,45,50,55,60,65,70	3.700	3.780	3.750	3.634	70	9 2-88189-8
9	2-88189-5	2,5,10,15,20,25,32	34,40,45,50,55,60,66	3.500	3.580	3.550	3.434	66	9 2-88189-6
9	2-88189-3	2,5,10,15,20,25,29	31,35,40,45,50,55,60	3.200	3.280	3.250	3.134	60	9 2-88189-4
9	2-88189-1	2,5,10,15,20,25,28	30,35,40,45,50,55,58	3.100	3.180	3.150	3.034	58	9 2-88189-2
9	1-88189-9	2,5,10,15,20,24	26,30,35,40,45,50	2.700	2.780	2.750	2.634	50	12 ~~2-88189-0~~
9	1-88189-7	2,5,10,15,21	23,25,30,35,40,44	2.400	2.480	2.450	2.334	44	9 1-88189-8
9	1-88189-5	2,5,10,15,19	21,25,30,35,40	2.200	2.280	2.250	2.134	40	9 1-88189-6
9	1-88189-3	2,5,10,17	19,25,30,36	2.000	2.080	2.050	1.934	36	9 1-88189-4
9	1-88189-1	2,5,10,13	15,20,25,28	1.600	1.680	1.650	1.534	28	9 1-88189-2
9	88189-9	2,5,12	14,20,26	1.500	1.580	1.550	1.434	26	1-88189-0
9	88189-7	2,5,11	13,20,24	1.400	1.480	1.450	1.334	24	88189-8
9	88189-5	2,5,9	11,15,20	1.200	1.280	1.250	1.134	20	88189-6
9	88189-3	2,5,8	10,15,18	1.100	1.180	1.150	1.034	18	88189-4
10	88189-1	2,5,10,15,18	20,25,30,35,38	2.100	2.180	2.150	2.034	38	12 ~~88189-2~~
INK STAMPED PART NO. 2 5		NEAR SIDE	FAR SIDE	D	C	B	A	NO OF POSN	AS MOLDED PART NO.
		CAVITY POSN. NO. STAMPED 5							

THIS DRAWING IS A CONTROLLED DOCUMENT.

DIMENSIONS: INCHES

TOLERANCES UNLESS OTHERWISE SPECIFIED:
0 PLC ± -
1 PLC ± -
2 PLC ± -
3 PLC ± .005
4 PLC ± -
ANGLES ± -

MATERIAL 11

FINISH -

DWN J. GALLUCCI 2-21-89
CHK D L ROCKER 3-2-89
APVD -
PRODUCT SPEC -
APPLICATION SPEC -
WEIGHT -

TE Connectivity

NAME HOUSING, PIN, DBL ROW, W/DETENT SLOTS, .100

SIZE	CAGE CODE	DRAWING NO	RESTRICTED TO
A1	00779	C-88189	-

CUSTOMER DRAWING | SCALE 4:1 | SHEET 1 OF 1 | REV AE2

4805 (3/11)

Mouser Electronics

Authorized Distributor

Click to View Pricing, Inventory, Delivery & Lifecycle Information:

TE Connectivity:

3-88189-0