THIS DRAWING IS UNPUBLISHED. RELEASED FOR PUBLICATION 20
© COPYRIGHT 20 BY - ALL RIGHTS RESERVED.

REVISIONS

P	LTR	DESCRIPTION	DATE	DWN	APVD
	C2	REVISED PER ECO-14-015436	13OCT2014	NK	MM

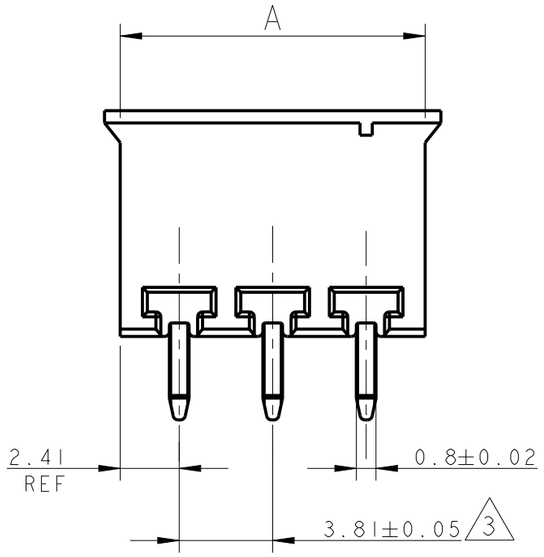

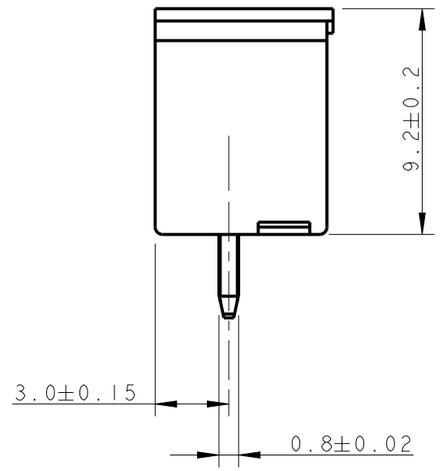

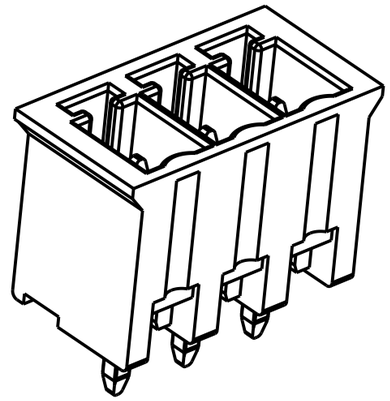

284517-3 AS SHOWN

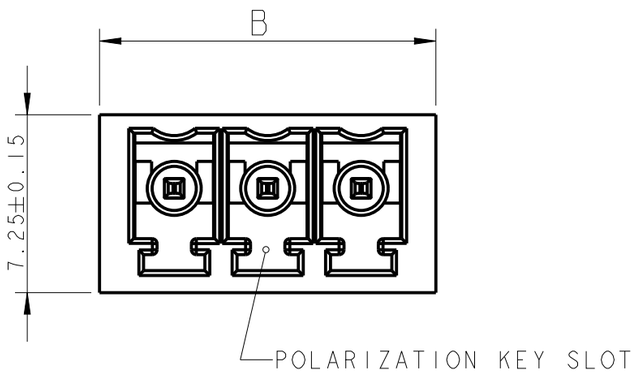

1 MATERIALS AND FINISH
HOUSING : PA 6.6, UL 94-V0, COLOR GREEN
TERMINAL : PHOSPHOR BRONZE, TIN PLATED

2 SUITABLE FOR 1.6-2.4 mm. PC BOARD THICKNESS

3 NOT CUMULATIVE TOLERANCE

4 HOUSING: PA 6.6, UL 94-V0, COLOR:RED

5 PRELIMINARY - NOT RELEASED FOR PRODUCTION

B	A	NO OF POS	PART NUMBER
17.53	16.25	4	2-284517-6
97.54	96.26	25	2-284517-5
93.73	92.45	24	2-284517-4
89.92	88.64	23	2-284517-3
86.11	84.83	22	2-284517-2
82.30	81.02	21	2-284517-1
78.49	77.21	20	2-284517-0
74.68	73.40	19	1-284517-9
70.87	69.59	18	1-284517-8
67.06	65.78	17	1-284517-7
63.25	61.97	16	1-284517-6
59.44	58.16	15	1-284517-5
55.63	54.35	14	1-284517-4
51.82	50.54	13	1-284517-3
48.01	46.73	12	1-284517-2
44.20	42.92	11	1-284517-1
40.39	39.11	10	1-284517-0
36.58	35.30	9	284517-9
32.77	31.49	8	284517-8
28.96	27.68	7	284517-7
25.15	23.87	6	284517-6
21.34	20.06	5	284517-5
17.53	16.25	4	284517-4
13.72	12.44	3	284517-3
9.91	8.63	2	284517-2

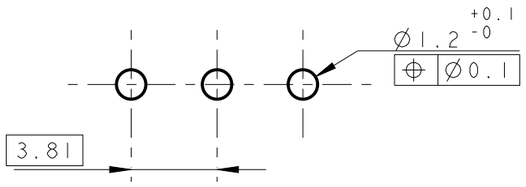

RECOMMENDED PC BOARD LAYOUT

THIS DRAWING IS A CONTROLLED DOCUMENT.

DIMENSIONS: mm

TOLERANCES UNLESS OTHERWISE SPECIFIED:
0 PLC ±-
1 PLC ±0.30
2 PLC ±0.25
3 PLC ±-
4 PLC ±-
ANGLES ±2°

MATERIAL 1 FINISH 1

DWN E. ZANOLINI 06FEB2002
CHK E. ZANOLINI 06FEB2002
APVD D. BIEVENOUR 06FEB2002
PRODUCT SPEC 108-20166
APPLICATION SPEC 114-20079
WEIGHT -

TE Connectivity

NAME TERMINAL BLOCK, HEADER ASSEMBLY STRAIGHT, CLOSED ENDS 3.81mm PITCH

SIZE	CAGE CODE	DRAWING NO	RESTRICTED TO
A3	00779	C-284517	-

CUSTOMER DRAWING SCALE 4:1 SHEET 1 OF 1 REV C2

1470-19 (3/13)

Mouser Electronics

Authorized Distributor

Click to View Pricing, Inventory, Delivery & Lifecycle Information:

TE Connectivity:

284517-9