THIS DRAWING IS UNPUBLISHED. RELEASED FOR PUBLICATION -,- .
© COPYRIGHT - BY TYCO ELECTRONICS CORPORATION. ALL RIGHTS RESERVED.

LOC	DIST
CM	0

REVISIONS

P	LTR	DESCRIPTION	DATE	DWN	APVD
	E	REVISED PER ECR-15-010337	24JUL2015	RK	SC

1. PINS TO COMPLY WITH AMP SOLDERABILITY SPEC. 108-11-3.

2. 0.00381 MIN MATTE TIN LEAD OVER 0.00127 MIN NICKEL.

3. 0.00076 MIN GOLD PLATE IN THE LOCALIZED PLATE AREA, 0.00381 MATTE TIN LEAD IN THE LOCALIZED PLATE AREA, BOTH OVER 0.00127 MIN NICKEL.

4. 0.00381 MIN MATTE TIN OVER 0.00127 MIN NICKEL.

5. 0.00076 MIN GOLD PLATE IN THE LOCALIZED PLATE AREA, 0.00381 MATTE TIN IN THE LOCALIZED PLATE AREA, BOTH OVER 0.00127 MIN NICKEL.

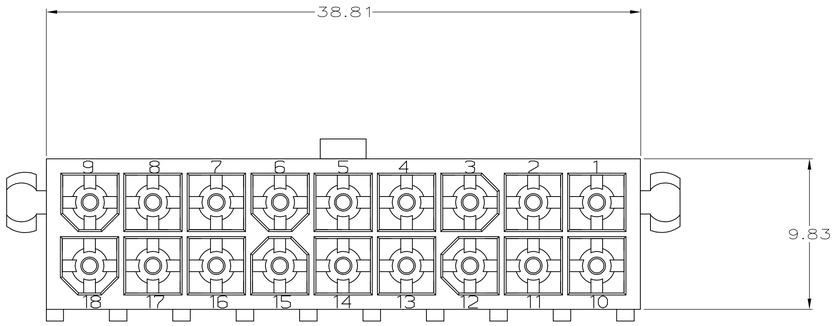

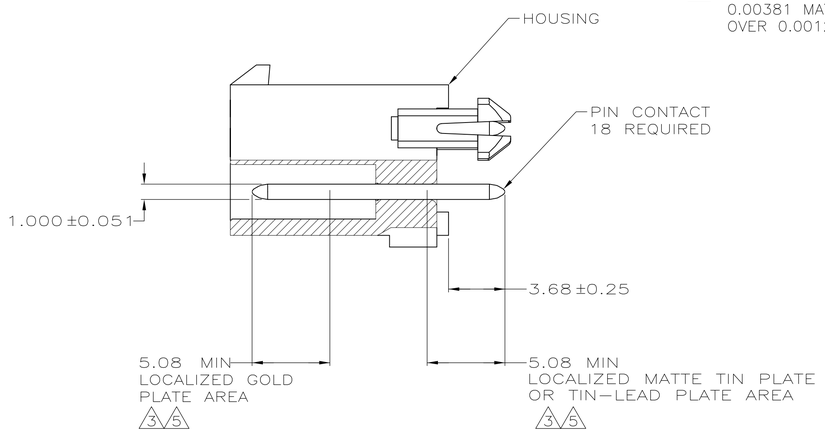

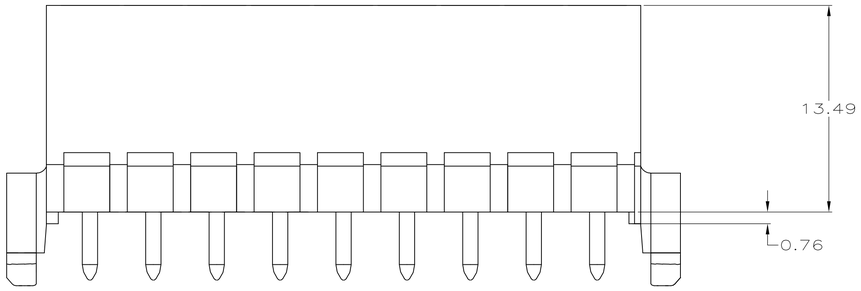

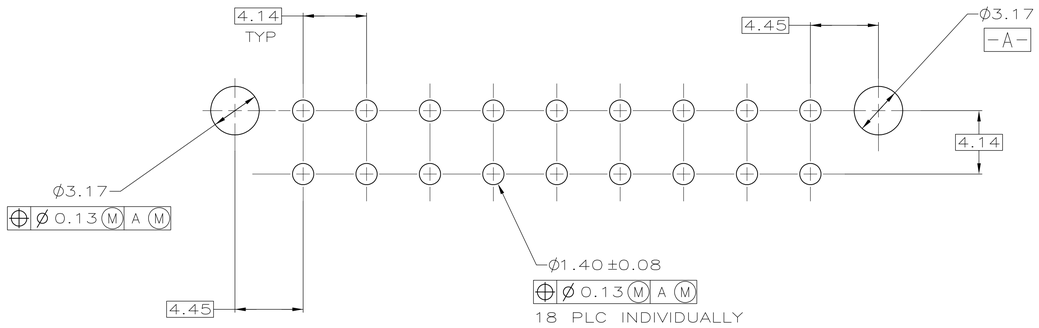

RECOMMENDED MOUNTING HOLE PATTERN
FOR 1.57 THICK P.C. BOARD

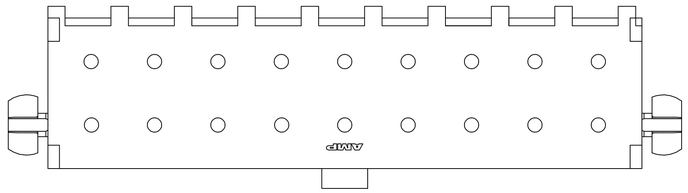

PIN CONTACT MATERIAL AND FINISH	HOUSING MATERIAL AND COLOR	PART NUMBER
BRASS, GOLD 5	NYLON, 94V-0, WHITE	1-794076-1
BRASS, TIN 4	NYLON, 94V-0, WHITE	1-794076-0
BRASS, GOLD 3	NYLON, 94V-0, WHITE	794076-2
BRASS, TIN LEAD 2	NYLON, 94V-0, WHITE	794076-1

THIS DRAWING IS A CONTROLLED DOCUMENT.

DIMENSIONS: mm

TOLERANCES UNLESS OTHERWISE SPECIFIED:
0 PLC ± -
1 PLC ± -
2 PLC ± 0.13
3 PLC ± -
4 PLC ± -
ANGLES ± -

MATERIAL: SEE TABLE
FINISH: SEE TABLE

DWN K. WHITAKER 5-18-95
CHK R. SWING 5-18-95
APVD R. ORSTAD 6-13-95
PRODUCT SPEC —
APPLICATION SPEC —
WEIGHT —

TE Connectivity

NAME: HEADER ASSEMBLY,CLOSED BOTTOM, 18 CIRCUIT,DOUBLE ROW VERTICAL, MINI-UNIVERSAL MATE-N-LOK

SIZE	CAGE CODE	DRAWING NO	RESTRICTED TO
A1	00779	C-794076	—

CUSTOMER DRAWING | SCALE 5:1 | SHEET 1 OF 1 | REV E

AMP 4805 REV 31MAR2000

Mouser Electronics

Authorized Distributor

Click to View Pricing, Inventory, Delivery & Lifecycle Information:

TE Connectivity:
794076-2