THIS DRAWING IS UNPUBLISHED. RELEASED FOR PUBLICATION - ,- .
© COPYRIGHT - 13MAR12 ALL RIGHTS RESERVED.

LOC	DIST
AD	00

REVISIONS

P	LTR	DESCRIPTION	DATE	DWN	APVD
	S4	REVISED PER ECO-13-005565	01APR13	KH	JO

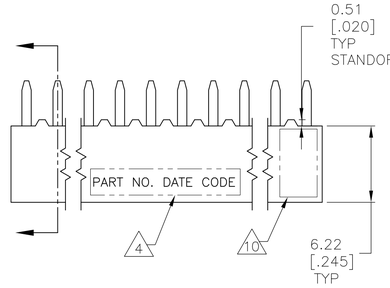

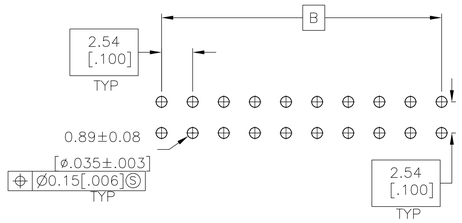

RECOMMENDED PC BOARD HOLE PATTERN
PC BOARD THICKNESS 1.57[.062]

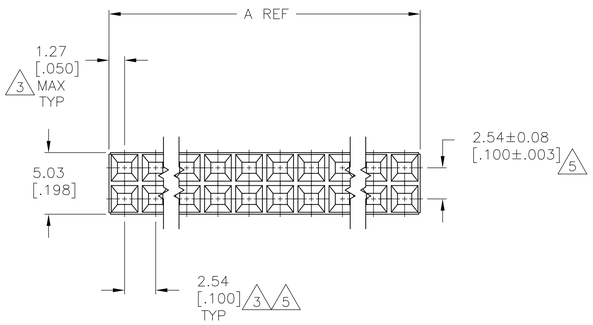

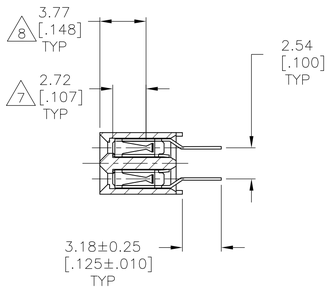

1. HOUSING: FLAME RETARDANT, GLASS FILLED, THERMOPLASTIC, COLOR: BLACK.
   CONTACT: PHOSPHOR BRONZE
2. CONTACT: AREA, 2.54-5.08μm[.000100-.000200] BRIGHT TIN-LEAD OVER 1.27μm[.000050] MIN NICKEL
3. THESE DIMENSIONS PERTAIN TO CAVITIY CENTERLINES ONLY - NOT TO CONTACT LOACATIONS
4. MARK PART NUMBER AND DATE CODE ARE MARKED IN APPROXIMATE LOCATION SHOWN, EITHER SIDE.
5. TOLERANCE IS NON-CUMULATIVE.
6. 2 POSITION DATE CODE IS MARKED OPPOSITE SIDE OF TE LOGO.
7. POINT-OF-MEASUREMENT DIMENSION FOR PLATING THICKNESS (INSIDE CONTACT BEAM).
8. POINT-OF-CONTACT DIMENSION.
9. CONTACT: AREA, 2.54-5.08μm[.000100-.000200] MATTE TIN OVER 1.27μm[.000050] MIN NICKEL
10. TE TRADEMARK AND CSA LOGO ARE MOLDED INTO HOUSING, THIS LOCATION.
11. NO PART NUMBER MARKING REQUIRED FOR THIS PART.
12. ROHS 2002/95/EC COMPLIANT.

	96.52[3.800]	99.06[3.900]	78	12	9-535585-0
	93.98[3.700]	96.52[3.800]	76	12	8-535585-9
	91.44[3.600]	93.98[3.700]	74	12	8-535585-8
	88.90[3.500]	91.44[3.600]	72	12	8-535585-7
	86.36[3.400]	88.90[3.500]	70	12	8-535585-6
	83.82[3.300]	86.36[3.400]	68	12	8-535585-5
	81.28[3.200]	83.82[3.300]	66	12	8-535585-4
	78.74[3.100]	81.28[3.200]	64	12	8-535585-3
	76.20[3.000]	78.74[3.100]	62	12	8-535585-2
	71.12[2.800]	73.66[2.900]	58	12	8-535585-1
	68.58[2.700]	71.12[2.800]	56	12	8-535585-0
	66.04[2.600]	68.58[2.700]	54	12	7-535585-9
	63.50[2.500]	66.04[2.600]	52	12	7-535585-8
	58.42[2.300]	60.96[2.400]	48	12	7-535585-7
	55.88[2.200]	58.42[2.300]	46	12	7-535585-6
	53.34[2.100]	55.88[2.200]	44	12	7-535585-5
	50.80[2.000]	53.34[2.100]	42	12	7-535585-4
	99.06[3.900]	101.60[4.000]	80	12	7-535585-3
	73.66[2.900]	76.20[3.000]	60	12	7-535585-2
9	60.96[2.400]	63.50[2.500]	50	12	7-535585-1
	48.26[1.900]	50.80[2.000]	40	12	7-535585-0
	45.72[1.800]	48.26[1.900]	38	12	6-535585-9
	43.18[1.700]	45.72[1.800]	36	12	6-535585-8
	40.64[1.600]	43.18[1.700]	34	12	6-535585-7
	38.10[1.500]	40.64[1.600]	32	12	6-535585-6
	35.56[1.400]	38.10[1.500]	30	12	6-535585-5
	33.02[1.300]	35.56[1.400]	28	12	6-535585-4
	30.48[1.200]	33.02[1.300]	26	12	6-535585-3
	27.94[1.100]	30.48[1.200]	24	12	6-535585-2
	25.40[1.000]	27.94[1.100]	22	12	6-535585-1
	22.86[.900]	25.40[1.000]	20	12	6-535585-0
	20.32[.800]	22.86[.900]	18	12	5-535585-9
	17.78[.700]	20.32[.800]	16	12	5-535585-8
	15.24[.600]	17.78[.700]	14	12	5-535585-7
	11 7.62[.300]	10.16[.400]	8	12	5-535585-6
	11 5.08[.200]	7.62[.300]	6	12	5-535585-5
	11 2.54[.100]	5.08[.200]	4	12	5-535585-4
	11 -	2.54[.100]	2	12 6	5-535585-3
	12.70[.500]	15.24[.600]	12	12	5-535585-2
	11 10.16[.400]	12.70[.500]	10	12	5-535585-1
FINISH	B	A	NO OF POSN		PART NUMBER

SUPERSEDED BY 6-535585-0	9	35.56[1.400]	38.10[1.500]	30	4-535585-1
		96.52[3.800]	99.06[3.900]	78	4-535585-0
		93.98[3.700]	96.52[3.800]	76	3-535585-9
		91.44[3.600]	93.98[3.700]	74	3-535585-8
		88.90[3.500]	91.44[3.600]	72	3-535585-7
		86.36[3.400]	88.90[3.500]	70	3-535585-6
		83.82[3.300]	86.36[3.400]	68	3-535585-5
		81.28[3.200]	83.82[3.300]	66	3-535585-4
		78.74[3.100]	81.28[3.200]	64	3-535585-3
		76.20[3.000]	78.74[3.100]	62	3-535585-2
		71.12[2.800]	73.66[2.900]	58	3-535585-1
		68.58[2.700]	71.12[2.800]	56	3-535585-0
		66.04[2.600]	68.58[2.700]	54	2-535585-9
		63.50[2.500]	66.04[2.600]	52	2-535585-8
		58.42[2.300]	60.96[2.400]	48	2-535585-7
		55.88[2.200]	58.42[2.300]	46	2-535585-6
		53.34[2.100]	55.88[2.200]	44	2-535585-5
		50.80[2.000]	53.34[2.100]	42	2-535585-4
		99.06[3.900]	101.60[4.000]	80	2-535585-3
		73.66[2.900]	76.20[3.000]	60	2-535585-2
	2	60.96[2.400]	63.50[2.500]	50	2-535585-1
		48.26[1.900]	50.80[2.000]	40	2-535585-0
		45.72[1.800]	48.26[1.900]	38	1-535585-9
		43.18[1.700]	45.72[1.800]	36	1-535585-8
		40.64[1.600]	43.18[1.700]	34	1-535585-7
		38.10[1.500]	40.64[1.600]	32	1-535585-6
		35.56[1.400]	38.10[1.500]	30	1-535585-5
		33.02[1.300]	35.56[1.400]	28	1-535585-4
		30.48[1.200]	33.02[1.300]	26	1-535585-3
		27.94[1.100]	30.48[1.200]	24	1-535585-2
		25.40[1.000]	27.94[1.100]	22	1-535585-1
		22.86[.900]	25.40[1.000]	20	1-535585-0
SUPERSEDED BY 5-535585-9		20.32[.800]	22.86[.900]	18	535585-9
SUPERSEDED BY 5-535585-8		17.78[.700]	20.32[.800]	16	535585-8
		15.24[.600]	17.78[.700]	14	535585-7
		11 7.62[.300]	10.16[.400]	8	535585-6
		11 5.08[.200]	7.62[.300]	6	535585-5
		11 2.54[.100]	5.08[.200]	4	535585-4
SUPERSEDED BY 5-535585-3		11 -	2.54[.100]	2	6 535585-3
		12.70[.500]	15.24[.600]	12	535585-2
		11 10.16[.400]	12.70[.500]	10	535585-1
	FINISH	B	A	NO OF POSN	PART NUMBER

THIS DRAWING IS A CONTROLLED DOCUMENT.

DIMENSIONS: mm [INCHES]

TOLERANCES UNLESS OTHERWISE SPECIFIED:
0 PLC ± -
1 PLC ± -
2 PLC ± 0.13[.005]
3 PLC ± -
4 PLC ± -
ANGLES ± -

MATERIAL 1
FINISH 2 9

DWN M.BINNER 06NOV2002
CHK J.OLSON 06NOV02
APVD J.OLSON 06NOV02
PRODUCT SPEC 108-25022
APPLICATION SPEC 114-25018
WEIGHT -

TE Connectivity

NAME
RECEPTACLE ASSEMBLY, MOD IV,
DOUBLE ROW, DUAL ENTRY, .100X.100CL,
VERTICAL MOUNT, AMPMODU

SIZE	CAGE CODE	DRAWING NO	RESTRICTED TO
A1	00779	C-535585	-

CUSTOMER DRAWING | SCALE 1:1 | SHEET 1 OF 1 | REV S4

Mouser Electronics

Authorized Distributor

Click to View Pricing, Inventory, Delivery & Lifecycle Information:

TE Connectivity:

6-535585-4