THIS DRAWING IS UNPUBLISHED. RELEASED FOR PUBLICATION -,- .
© COPYRIGHT - By - TE CONNECTIVITY ALL RIGHTS RESERVED.

| LOC | DIST |
|---|---|
| CM | 00 |

REVISIONS

| P | LTR | DESCRIPTION | DATE | DWN | APVD |
|---|---|---|---|---|---|
| | F2 | REVISED PER ECR-15-006687 | 21OCT2015 | NK | NL |

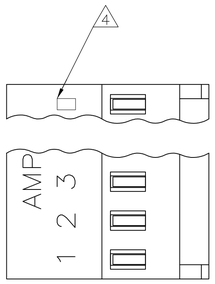


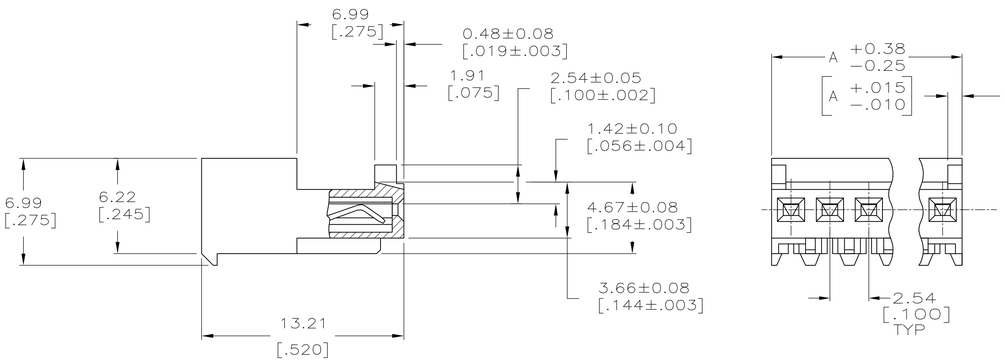


1. MATERIAL: CONNECTOR-NYLON UL94V-2 (BLUE).
   CONTACTS-0.30 [.012] THICK COPPER ALLOY
   0.00076 [.000030] GOLD OR 0.00076[.000030]
   TOTAL GOLD FLASH OVER PALLADIUM NICKEL,
   PER TE CONNECTIVITY'S DISCRETION, IN CONTACT
   AREA WITH MATTE TIN FOR 644043-2
   THRU 1-644043-4, MATTE WHISKER MITIGATED TIN
   FOR 3-644043-2 THRU 4-644043-4 OVER
   NICKEL UNDERPLATE.
2. CONTACTS ACCEPT 26 AWG WIRE WITH 1.52 [.060] MAX INSULATION DIAMETER.
3. CONTACTS MUST ACCEPT 0.64±0.03 [.025±.001] SQUARE POST AND REMAIN LOCKED IN POSITION.
4. IDENTIFICATION NUMBER FOR LAST CIRCUIT MAY NOT APPEAR ON ALL ASSEMBLIES.
5. DIMENSIONS IN BRACKETS ARE IN INCHES.
6. HOUSING FEATURES ARE: CLOSED END WITH LOCKING RAMP AND WITH POLARIZING TAB.
7. OBSOLETE PARTS: OBSOLETE CIS STREAMLINING PER D.RENAUD/D.SINISI
8. OBSOLETE PART NUMBER

LEAD FREE

| DIM A | NO.OF POSN | ASSEMBLY |
|---|---|---|
| 35.56 [1.400] | 14 | 4-644043-4 |
| 33.02 [1.300] | 13 | 4-644043-3 |
| 30.48 [1.200] | 12 | 4-644043-2 |
| 27.94 [1.100] | 11 | 4-644043-1 |
| 25.40 [1.000] | 10 | 4-644043-0 |
| 22.86 [.900] | 9 | 3-644043-9 |
| 20.32 [.800] | 8 | 3-644043-8 |
| 17.78 [.700] | 7 | 3-644043-7 |
| 15.24 [.600] | 6 | 3-644043-6 |
| 12.70 [.500] | 5 | 3-644043-5 |
| 10.16 [.400] | 4 | 3-644043-4 |
| 7.62 [.300] | 3 | 3-644043-3 |
| 5.08 [.200] | 2 | 3-644043-2 |

LEAD FREE

| DIM A | NO.OF POSN | ASSEMBLY |
|---|---|---|
| 35.56 [1.400] | 14 | 8 ~~1-644043-4~~ |
| 33.02 [1.300] | 13 | 8 ~~1-644043-3~~ |
| 30.48 [1.200] | 12 | 8 ~~1-644043-2~~ |
| 27.94 [1.100] | 11 | 7 ~~1-644043-1~~ |
| 25.40 [1.000] | 10 | 8 ~~1-644043-0~~ |
| 22.86 [.900] | 9 | 8 ~~644043-9~~ |
| 20.32 [.800] | 8 | 8 ~~644043-8~~ |
| 17.78 [.700] | 7 | 7 ~~644043-7~~ |
| 15.24 [.600] | 6 | 8 ~~644043-6~~ |
| 12.70 [.500] | 5 | 8 ~~644043-5~~ |
| 10.16 [.400] | 4 | 8 ~~644043-4~~ |
| 7.62 [.300] | 3 | 8 ~~644043-3~~ |
| 5.08 [.200] | 2 | 8 ~~644043-2~~ |

THIS DRAWING IS A CONTROLLED DOCUMENT.

DIMENSIONS: mm [INCHES]

TOLERANCES UNLESS OTHERWISE SPECIFIED:
0 PLC ±
1 PLC ±
2 PLC ± 0.13 [.005]
3 PLC ±
4 PLC ±
ANGLES ±

MATERIAL 1
FINISH 1

DWN S. HOOVER 28-DEC-2004
CHK D. BOSSI 28-DEC-2004
APVD D. BOSSI 28-DEC-2004
PRODUCT SPEC 108-1050
APPLICATION SPEC 114-1019
WEIGHT

TE Connectivity

NAME MTA .100 CONNECTOR ASSEMBLY 26 AWG, STANDARD

| SIZE | CAGE CODE | DRAWING NO | RESTRICTED TO |
|---|---|---|---|
| A1 | 00779 | C-644043 | |

CUSTOMER DRAWING SCALE 5:1 SHEET 1 OF 1 REV F2

4805 (3/11)