THIS DRAWING IS UNPUBLISHED. RELEASED FOR PUBLICATION – ,– .
© COPYRIGHT – BY TYCO ELECTRONICS CORPORATION. ALL INTERNATIONAL RIGHTS RESERVED.

LOC	DIST
GP	00

REVISIONS

P	LTR	DESCRIPTION	DATE	DWN	APVD
	AE	REVISED PER ECO-08-025674	22OCT08	JDP	CWR
	AE1	REVISED PER ECO-09-021826	8JAN10	KK	AEG

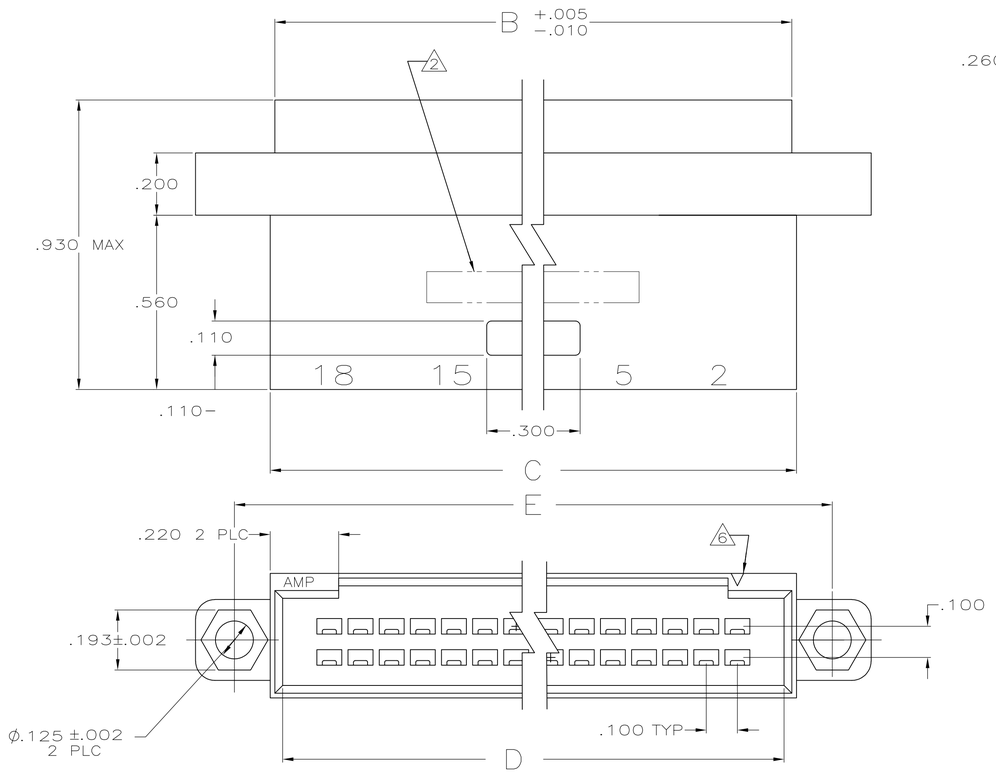

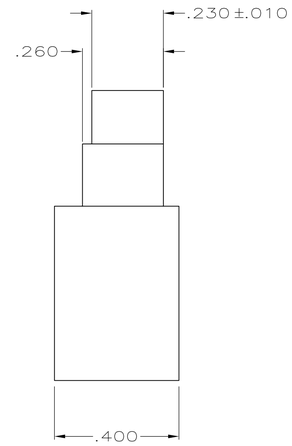

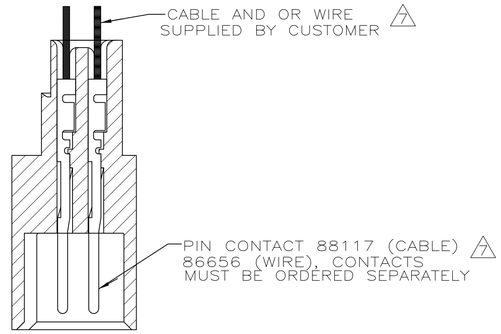

CRIMPED CONTACT SHOWN FOR REFERENCE ONLY

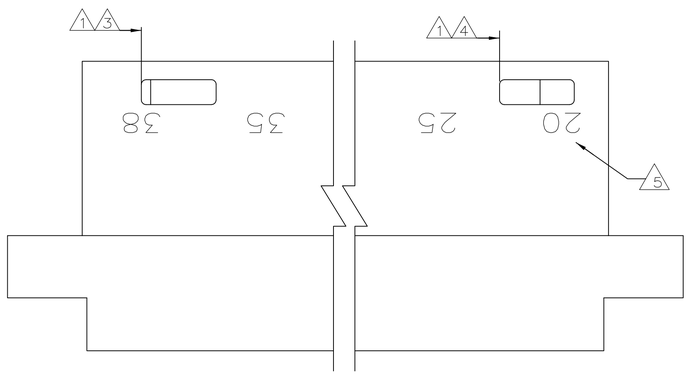

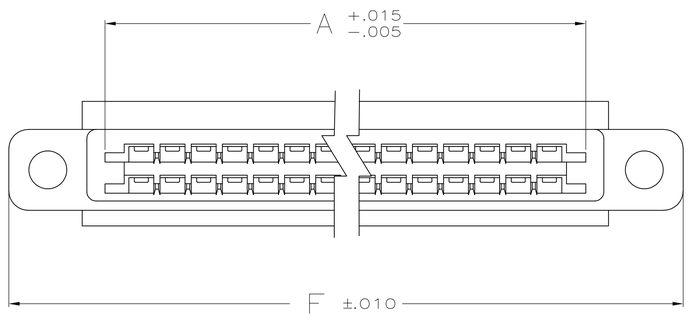

1. DETENT SLOTS 6,10,12,16 & 18 POSN
   ONE SLOT LOCATED AS FOLLOWS:
   - 6 POSN CENTERLINE OF FIRST CIRCUIT FROM LEFT
   - 10 AND 12 POSN CENTERLINE OF SECOND CIRCUIT FROM LEFT
   - 16 POSN CENTERLINE OF THIRD CIRCUIT FROM LEFT
   - 18 POSN CENTERLINE OF FOURTH CIRCUIT FROM LEFT

   20 POSN AND GREATER TWO DETENT SLOTS LOCATED AS SHOWN
2. PART NO. AND DATE CODE INK STAMPED, WHITE.
3. CENTERLINE OF FIRST CAVITY FROM LEFT
4. CENTERLINE OF THIRD CAVITY FROM RIGHT
5. CAVITY IDENTS INK STAMPED (WHITE), (SEE TABLE)
6. INDICATES POSITION 1, MAY BE RECESSED OR RAISED.
7. HOUSING WILL ACCOMMODATE FLEXIBLE FLAT CABLE .050 OR .062 WIDE CONDUCTORS ON .100 CENTERS (CABLE=.015 MAX THK) AND #22–#24 AWG WIRE WITH INSULATION RANGE OF .061 TO .069 DIA
8. THIS HOUSING IS DESIGNED TO MATE WITH FFC RECEPTACLE HOUSING AND AMP LATCH RECEPTACLE HOUSING
9. OBSOLETE PART NUMBER
10. GLASS–FILLED NYLON, BLACK, UL V–0.
11. OBSOLETE PARTS: OBSOLETE CIS STREAMLINING PER D.RENAUD/D.SINISI

	INK STAMPED PART NO.	NEAR SIDE	FAR SIDE	F	E	D	C	B	A	NO OF POSN		AS MOLDED PART NO.
		CAVITY POSN NO. STAMPED										
9	3–88190–7	2,5,10,16	18,25,30,34	2.460	2.210	1.900	1.980	1.950	1.834	34	11	3–88190–8
9	3–88190–5	2,5	7,10,12	1.360	1.110	.800	.880	.850	.734	12	9	3–88190–6
9	3–88190–3	2,5,7	9,16	1.560	1.310	1.000	1.080	1.050	.931	16		3–88190–4
11	3–88190–1	2	4,6	1.060	.810	.500	.580	.550	.434	6		3–88190–2
9	2–88190–9	2,4	6,10	1.260	1.010	.700	.780	.750	.634	10		3–88190–0
9	2–88190–7	2,5,10,15,20,25,30,34	36,40,45,50,55,60,65,70	4.260	4.010	3.700	3.780	3.750	3.634	70	9	2–88190–8
9	2–88190–5	2,5,10,15,20,25,32	34,40,45,50,55,60,66	4.060	3.810	3.500	3.580	3.550	3.434	66	11	2–88190–6
9	2–88190–3	2,5,10,15,20,25,29	31,35,40,45,50,55,60	3.760	3.510	3.200	3.280	3.250	3.134	60	9	2–88190–4
9	2–88190–1	2,5,10,15,20,25,28	30,35,40,45,50,55,58	3.660	3.410	3.100	3.180	3.150	3.034	58	9	2–88190–2
9	1–88190–9	2,5,10,15,21	23,25,30,35,40,44	2.960	2.710	2.400	2.480	2.450	2.334	44	9	2–88190–0
9	1–88190–7	2,5,10,15,19	21,25,30,35,40	2.760	2.510	2.200	2.280	2.250	2.134	40		1–88190–8
9	1–88190–5	2,5,10,17	19,25,30,36	2.560	2.310	2.000	2.080	2.050	1.934	36	9	1–88190–6
9	1–88190–3	2,5,10,13	15,20,25,28	2.160	1.910	1.600	1.680	1.650	1.534	28	11	1–88190–4
11	1–88190–1	2,5,12	14,20,26	2.060	1.810	1.500	1.580	1.550	1.434	26		1–88190–2
9	88190–9	2,5,11	13,20,24	1.960	1.710	1.400	1.480	1.450	1.334	24		1–88190–0
9	88190–7	2,5,9	11,15,20	1.760	1.510	1.200	1.280	1.250	1.134	20		88190–8
9	88190–5	2,5,8	10,15,18	1.660	1.410	1.100	1.180	1.150	1.034	18		88190–6
9	88190–3	2,5,10,15,20,24	26,30,35,40,45,50	3.260	3.010	2.700	2.780	2.750	2.634	50	11	88190–4
9	88190–1	2,5,10,15,18	20,25,30,35,38	2.660	2.410	2.100	2.180	2.150	2.034	38		88190–2

THIS DRAWING IS A CONTROLLED DOCUMENT.

DIMENSIONS: INCHES

TOLERANCES UNLESS OTHERWISE SPECIFIED:
0 PLC ± –
1 PLC ± –
2 PLC ± –
3 PLC ± .005
4 PLC ± –
ANGLES ± –

MATERIAL 10

FINISH –

DWN J. GALLUCCI 2–20–89
CHK D. L. ROCKER 3–2–89
APVD –
PRODUCT SPEC –
APPLICATION SPEC –
WEIGHT –

Tyco Electronics
Tyco Electronics Corporation
Harrisburg, PA 17105–3608

NAME HOUSING, PIN, DBL ROW, W/DETENT SLOTS, MTG EARS, .100 C/L

SIZE A1 | CAGE CODE 00779 | DRAWING NO C–88190 | RESTRICTED TO –

CUSTOMER DRAWING | SCALE 4:1 | SHEET 1 OF 1 | REV AE1

4805 (1/08)

Mouser Electronics

Authorized Distributor

Click to View Pricing, Inventory, Delivery & Lifecycle Information:

TE Connectivity:
88190-8