Apr.1.2020 Copyright 2020 HIROSE ELECTRIC CO., LTD. All Rights Reserved.
In case of consideration for using Automotive equipment / device which demand high reliability, kindly contact our sales window correspondents.

	COUNT	DESCRIPTION OF REVISIONS	BY	CHKD	DATE		COUNT	DESCRIPTION OF REVISIONS	BY	CHKD	DATE
1	3	RE-F-09671	K.N	H.Y	04.04.08						. .
2	1	RE-F-10252	K.D	H.O	04.12.06						. .
					. .						. .

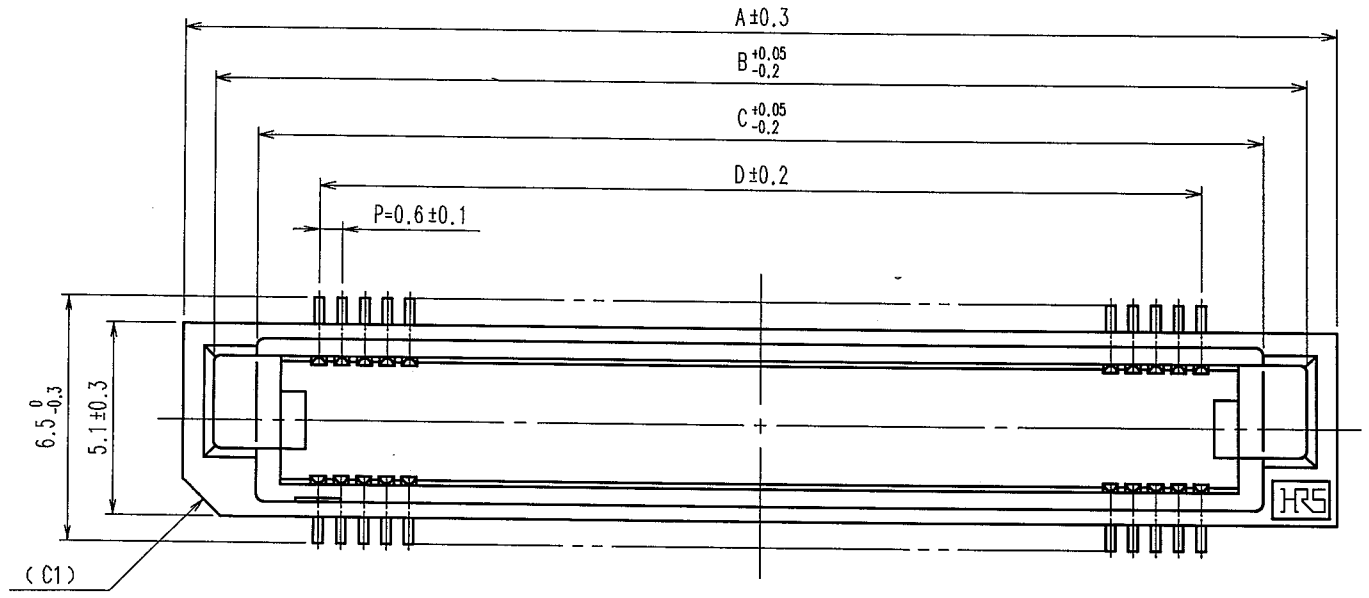

RECOMMENDED LAND PATTERN DIMENSION OF P.C.B. (MOUNTING SIDE)

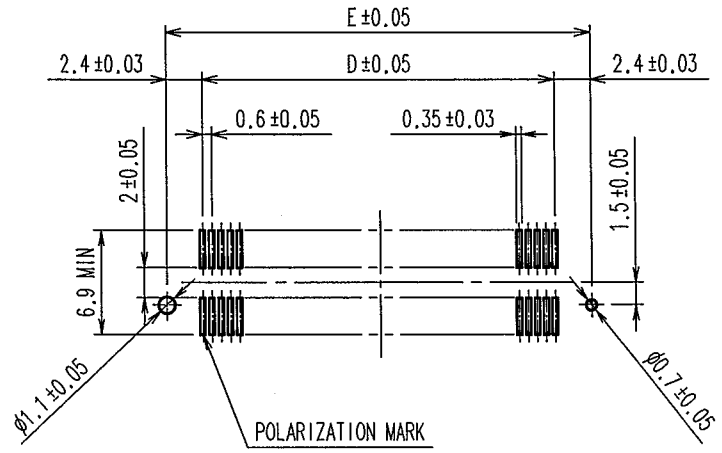

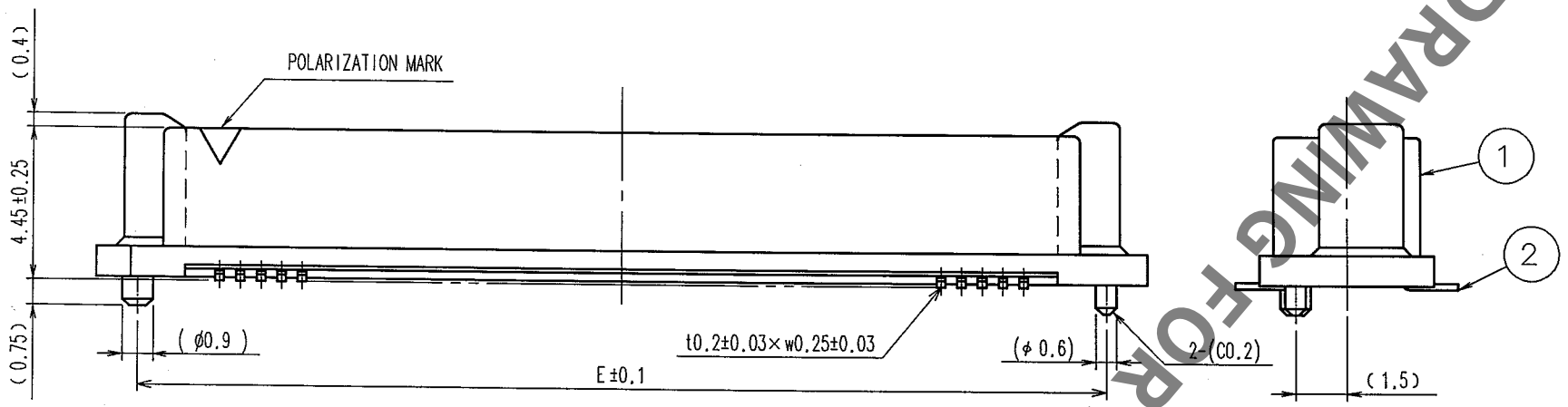

DIMENSION TABLE OF CONNECTOR AND P.C.B. LAND PATTERN.

PART No.	CODE No.	5	A	B	C	D	E
FX8C- 60P-SV(92)	CL578-0501-9-92	60	24.60	23.00	20.70	17.40	22.20
FX8C- 80P-SV(92)	CL578-0503-4-92	80	30.60	29.00	26.70	23.40	28.20
FX8C-100P-SV(92)	CL578-0505-0-92	100	36.60	35.00	32.70	29.40	34.20
FX8C-120P-SV(92)	CL578-0506-2-92	120	42.60	41.00	38.70	35.40	40.20
FX8C-140P-SV(92)	CL578-0507-5-92	140	48.60	47.00	44.70	41.40	46.20

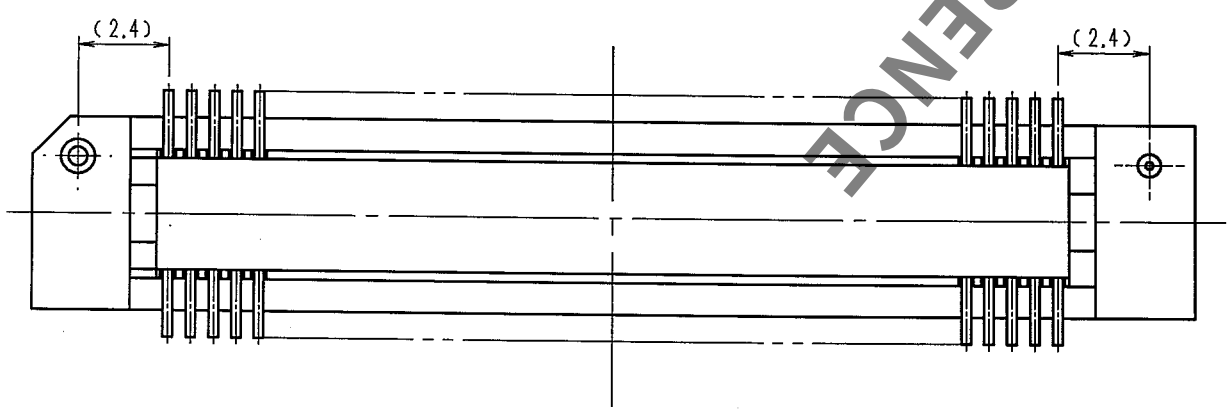

NOTE 1. LEAD CO-PLANARITY SHALL BE 0.1mm MAX.
2. EMBOSSED CARRIER TAPE PACKAGING SHALL BE APPLIED FOR THIS PRODUCT. SEE NEXT PAGE FOR DETAILS.
3. FOR MODIFICATION,ETC.,PREVENTIVE HOLE FOR SINK MARK MAY BE ADDED ACCORDING TO CIRCUMSTANCES.
4. THE DIMENSIONS IN PARENTHESES ARE FOR REFERENCE.
5 NUMBER OF CONTACTS.

NO.	MATERIAL	FINISH, REMARKS	NO.	MATERIAL	FINISH, REMARKS
1	POLYPHENYLENE SULFIDE	LIGHT BROWN (UL94V-0)	2	PHOSPHOR BRONZE	CONTACT AREA:GOLD 0.1μm min LEAD AREA:GOLD FLASH UNDER PLATING:NICKEL 0.5μm min

CODE NO.(OLD)	DRAWN	DESIGNED	CHECKED	APPROVED	RELEASED
CL	S.SUZUKI 03.02.03	K.NAKAMURA 03.02.12	H.OKAWA 03.02.14	Y.YOSHIMURA 03.02.15	. .

SCALE FREE
UNITS mm
DRAWING NO. EDC3-151020-22
HRS HIROSE ELECTRIC CO., LTD
PART NO. FX8C-**P-SV(92)
CODE NO. CL578
1/2

TO
PCK

HRS DRAWING FOR REFERENCE

Apr.1.2020 Copyright 2020 HIROSE ELECTRIC CO., LTD. All Rights Reserved.
In case of consideration for using Automotive equipment / device which demand high reliability, kindly contact our sales window correspondents.

COUNT	DESCRIPTION OF REVISIONS	BY	CHKD	DATE	COUNT	DESCRIPTION OF REVISIONS	BY	CHKD	DATE
△				. .	△				. .
△				. .	△				. .
△				. .	△				. .

UNREELING DIRECTION

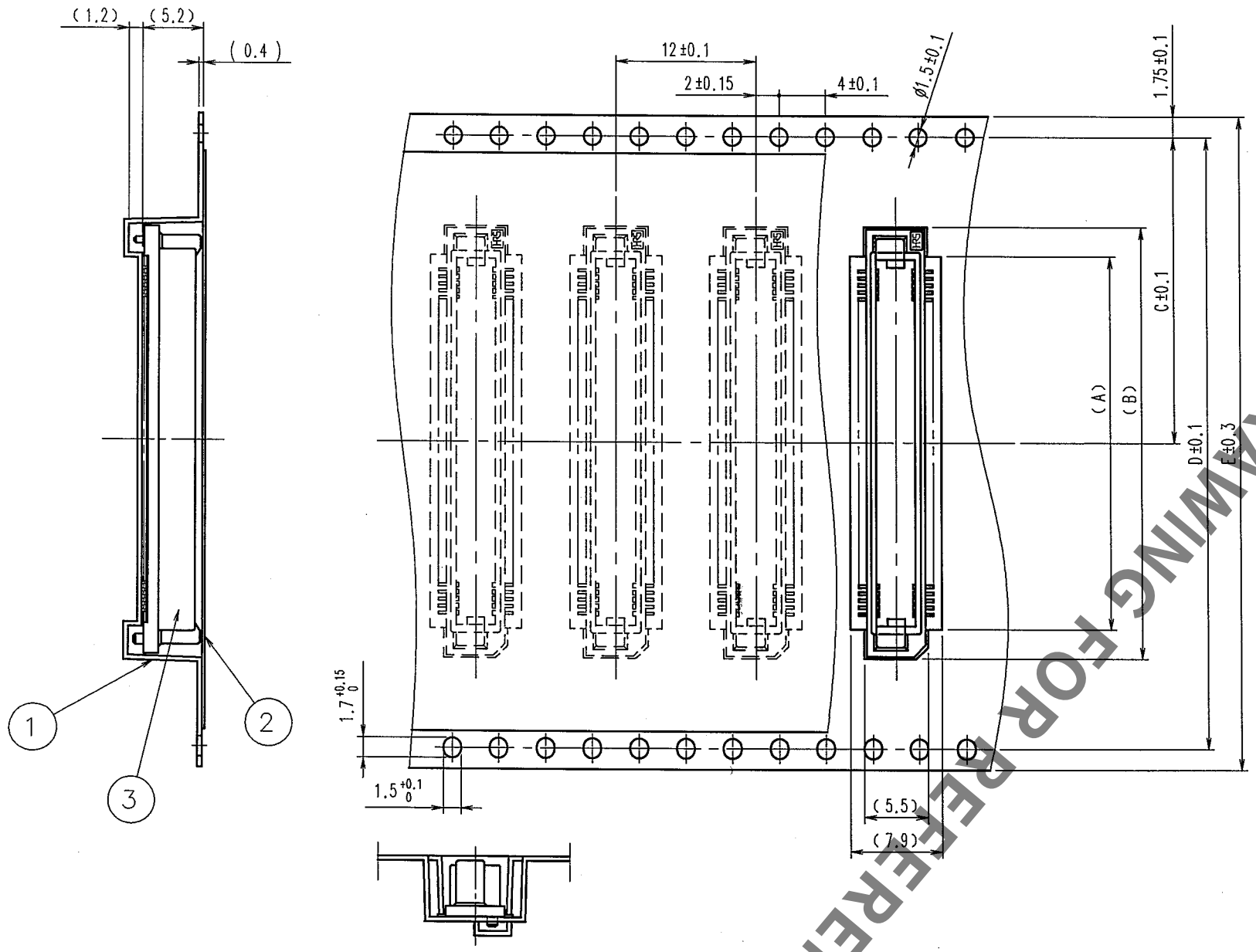

REEL DIMENSION

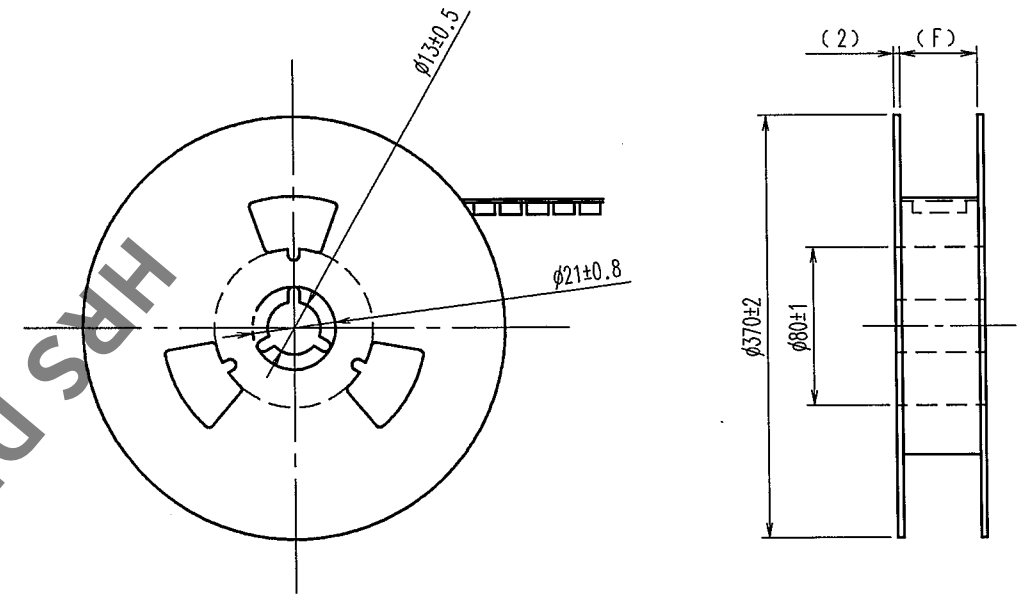

△DIMENSION TABLE OF EMBOSSED CARRIER TAPE AND REEL.

PART No.	CODE No.	2	A	B	C	D	E	F
FX8C- 60P-SV(92)	CL578-0501-9-92	60	20	25	20.2	40.4	44	44.4
FX8C- 80P-SV(92)	CL578-0503-4-92	80	26	31	20.2	40.4	44	44.4
FX8C-100P-SV(92)	CL578-0505-0-92	100	32	37	26.2	52.4	56	56.4
FX8C-120P-SV(92)	CL578-0506-2-92	120	38	43	26.2	52.4	56	56.4
FX8C-140P-SV(92)	CL578-0507-5-92	140	44	49	34.2	68.4	72	72.4

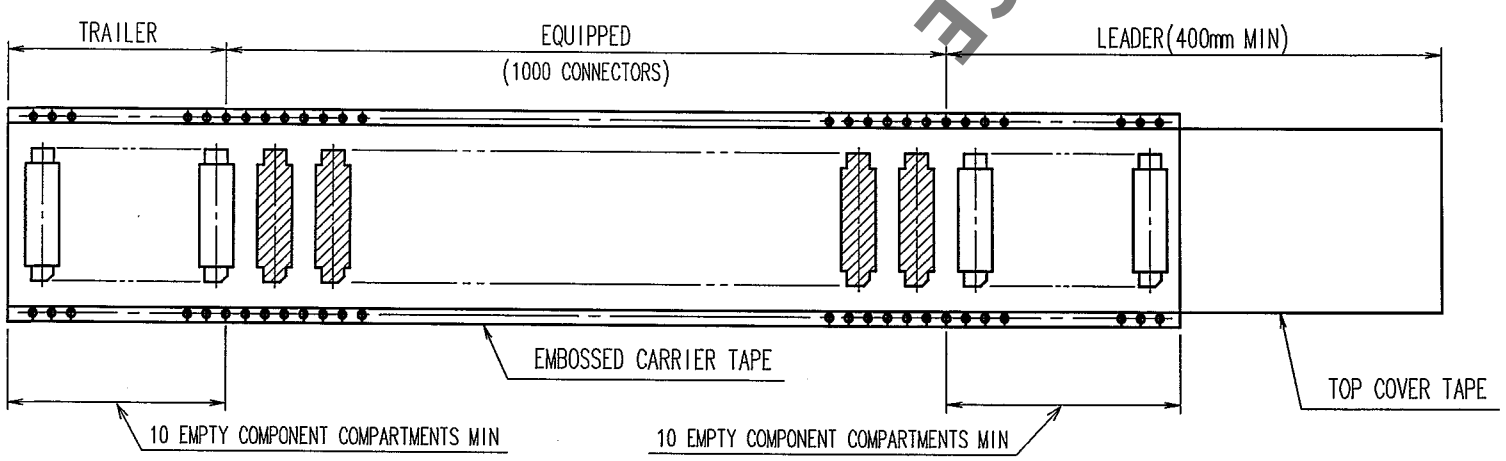

NOTE 1 1 RELL : 1000 CONNECTORS
2 NUMBER OF CONTACTS
3 THE DIMENSIONS IN PARENTHESES ARE FOR REFERENCE.

NO.	MATERIAL	FINISH, REMARKS	NO.	MATERIAL	FINISH, REMARKS
2	POLYESTER	(TOP COVER TAPE)			
1	POLYSTYRENE △	(EMBOSSED CARRIER TAPE)	3		(CONNECTOR)

CODE NO.(OLD)	DRAWN	DESIGNED	CHECKED	APPROVED	RELEASED
CL	S.SUZUKI 03.02.03	K.NAKAMURA 03.02.12	H.OKAWA 03.02.14	Y.YOSHIMURA 03.02.15	. .

SCALE FREE	DRAWING NO. EDC3-151020-22	PART NO. FX8C-**P-SV(92)
UNITS mm	HRS HIROSE ELECTRIC CO., LTD	CODE NO. CL578 2/

TO
PCK

HRS DRAWING FOR REFERENCE