THIS DRAWING IS UNPUBLISHED. RELEASED FOR PUBLICATION 20
© COPYRIGHT20 BY - ALL RIGHTS RESERVED.

creo
Creo Parametric 3.0
DO NOT REVISE EXCEPT BY CAD

REVISIONS

P	LTR	DESCRIPTION	DATE	DWN	APVD
	A3	OBSOLETE -4 ECO-09-005893	10AUG2009	NCL	SHA
	B	REVISED DESIGN ECO-10-001844	02FEB2010	NCL	SHA
	B1	REVISED DRAWING ECO-17-001593	14JUL2017	NCL	NMS

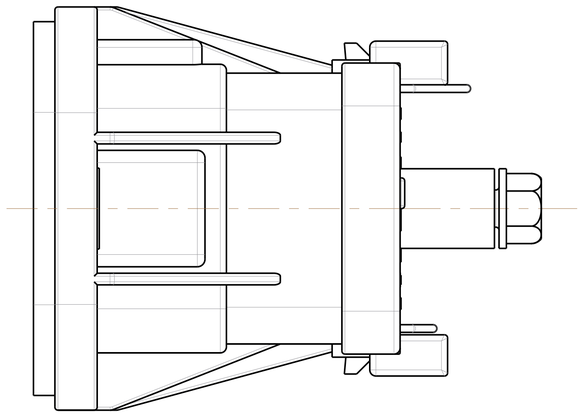

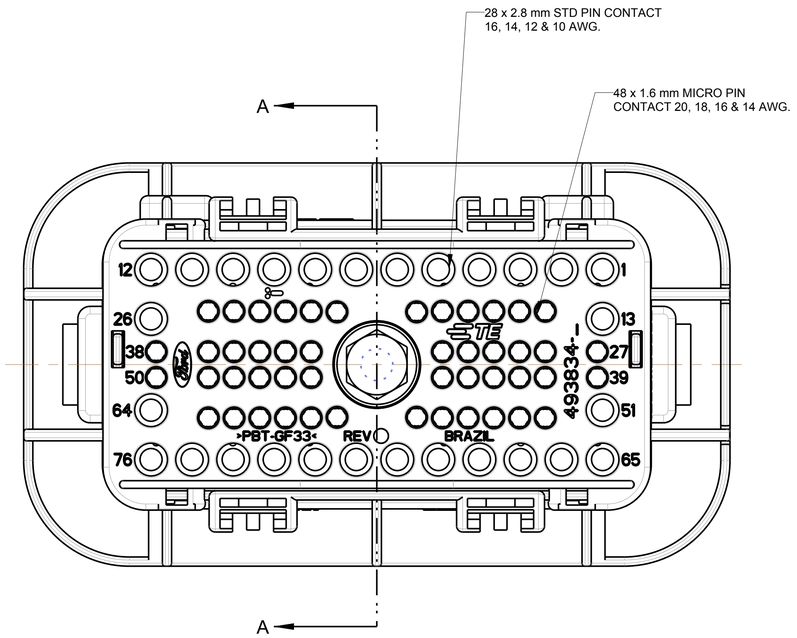

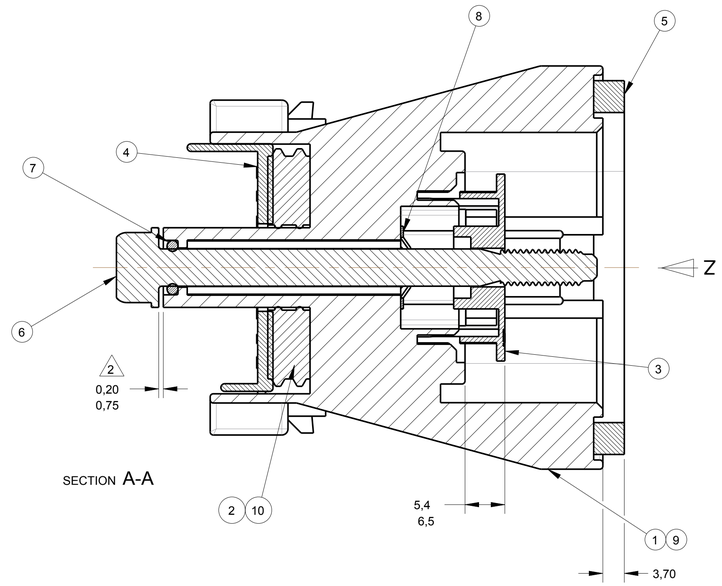

SECTION A-A

1 - PARA ASSEGURAR A COMPATIBILIDADE FUNCIONAL ENTRE AS PEÇAS,ELAS DEVEM SER FERRAMENTADAS JUNTAS E MANUFATURADAS POR UM MESMO PROVEDOR.

2 - PARAFUSO ITEM 6, DEVE GIRAR LIVREMENTE APÓS INSTALAÇÃO DA TRAVA ITEM 8.

3 - POLARIZAÇÃO "KEY A"

4 - POLARIZAÇÃO "KEY B"

5 - 1599186 (HSG ASSY 76 POSN SOCKET CONTACT) DEVE MONTAR COM 1599185 (HSG ASSY 76 POSN PIN CONTACT) APROPRIADAMENTE.

6 - A TRAVA ITEM 8 DEVE SUPORTAR 2,224 KN EMPURRANDO O PARAFUSO NO SENTIDO Z

7 - O CONECTOR DEVE SER TOTALMENTE ENCAIXADO USANDO TORQUE DE 4,8 ± 0,8 Nm NO PARAFUSO.

8 - OS CONECTORES SELADOS DEVEM ATENDER AO TESTE DE VEDAÇÃO CONFORME IEC-60529-IPX4.

9 - PARA EXTRAÇÃO DO TERMINAL UTILIZAR FERRAMENTA CONFORME TE SPEC 411-37031

10 -NAO USAR FIO DE 20 AWG ISOLAÇÃO FINA (EXCETO CABO RAYCHEM 55E 0,50mm²-DIA EXTERNO 1,21-1,31mm,PARA PN 1599185-3, CAVIDADES 1,6mm)

11 - SOMENTE PROTOTIPO

1 - TO ENSURE FUNCTIONAL COMPATIBILITY BETWEEN PARTS THEY MUST BE TOOLED TOGETHER AND MOLDED BY A SINGLE SOURCE.

2 - BOLT ITEM 6, MUST ROTATE FREELY AFTER INSTALLATION OF NUT, ITEM 8.

3 - POLARIZATION "KEY A"

4 - POLARIZATION "KEY B"

5 - 1599186 (HSG ASSY 76 POSN SOCKET CONTACT) MUST MATE PROPERLY WITH 1599185 (HSG ASSY 76 POSN PIN CONTACT).

6 - RETAINER M6,0 (ITEM 8) MUST WITHSTAND A PUSH OUT FORCE ON THE BOLT OF 2.224 KN IN THE DIRECTION OF ARROW "Z"

7 - PARTS MUST FULLY MATE USING 4.8 ± 0.8 Nm TORQUE ON BOLT.

8 - SEALED CONNECTORS SHALL ATTEND SEAL PERFORMANCE TEST ACCORDING TO IEC 60529 IPX4.

9 - FOR TERMINAL EXTRACTION TOOL SEE TE SPEC 411-37031

10- DO NOT USE 20 AWG THIN WALL INSULATION WIRE (EXCEPT BY RAYCHEM 55E 0,50mm² CABLE OD 1,21-1,31mm, FOR PN 1599185-3, 1,6mm CAVITIES)

11 - PROTOTYPE ONLY

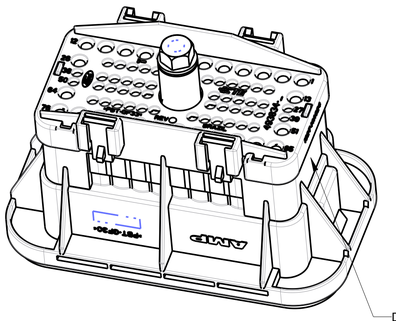

PERSPECTIVE VIEW
SCALE 1:1

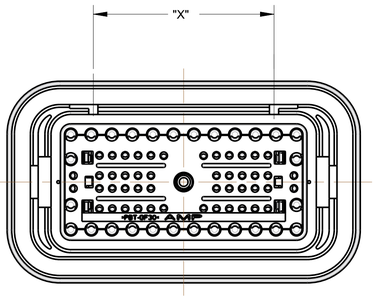

SCALE 1:1

DATE CODE
XXXXXXX-X / XXXXXX

I.D. NO.

COMPONENT CHANGE
SHIFT
DAY
MONTH
YEAR

4	B	71,5	1599185-2
4	B	71,5	1599185-2
4	B	71,5	1599185-2
3	A	59,00	1599185-1
	KEY	"X"	PART NUMBER
	POLARIZATION		

| PART NUMBER | TOTAL OPEN HOLES | 76 | 75 | 74 | 73 | 72 | 71 | 70 | 69 | 68 | 67 | 66 | 65 | 64 | 63 | 62 | 61 | 60 | 59 | 58 | 57 | 56 | 55 | 54 | 53 | 52 | 51 | 50 | 49 | 48 | 47 | 46 | 45 | 44 | 43 | 42 | 41 | 40 | 39 | 38 | 37 | 36 | 35 | 34 | 33 | 32 | 31 | 30 | 29 | 28 | 27 | 26 | 25 | 24 | 23 | 22 | 21 | 20 | 19 | 18 | 17 | 16 | 15 | 14 | 13 | 12 | 11 | 10 | 9 | 8 | 7 | 6 | 5 | 4 | 3 | 2 | 1 |
|---|---|---|---|---|---