THIS DRAWING IS UNPUBLISHED. RELEASED FOR PUBLICATION -,- .
© COPYRIGHT - By - ALL RIGHTS RESERVED.

REVISIONS

P	LTR	DESCRIPTION	DATE	DWN	APVD
	F	REVISED PER ECO-16-005426	09AUG2016	NK	DR

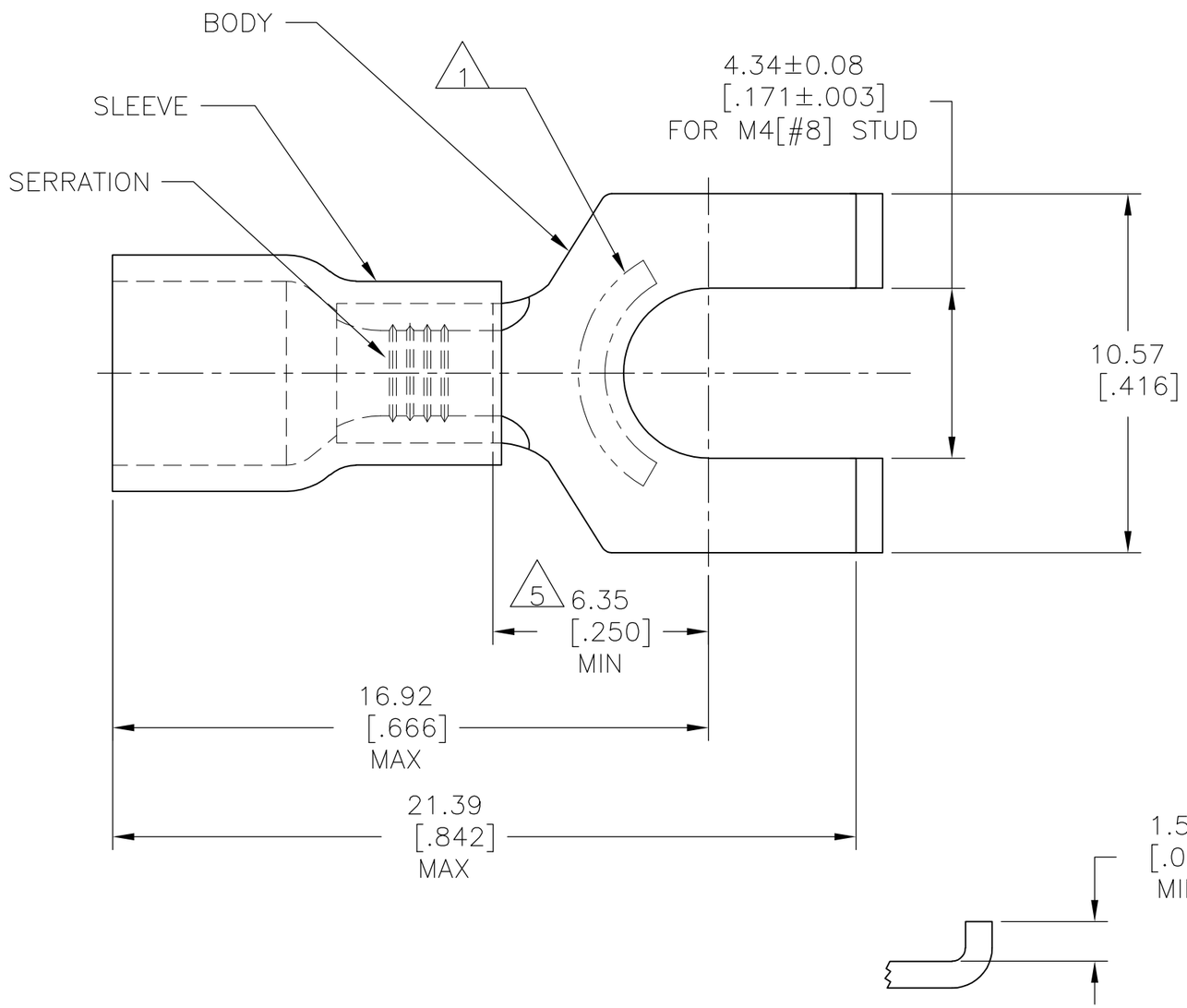

AMP WIRE RANGE	Listed FILE E13288	LR7189 Certified
16-14 AWG SOLID OR STRANDED	16-14 AWG SOLID OR STRANDED	16-14 AWG SOLID OR STRANDED

1. STAMP AMP 16-14* APPROX AS SHOWN.
2. WIRE INSUL DIA, 3.00-4.90 [.118-.193].
3. TONGUE MATL THK, 0.79±0.05 [.031±.002].
4. MATERIAL: BODY - CU PER ASTM B152
   SLEEVE - PVC, COLOR - BLUE.
5. DIMENSION APPLIES FROM EDGE OF METAL WIRE BARREL TO CENTER OF STUD HOLE.

QTY	PACKAGE TYPE	PART NO
5000	ON TAPE,REEL	2-324170-1
1000	LOOSE PIECE	324170

AMP INCORPORATED
CUSTOMER SERVICE SYSTEMS

FOR ADDITIONAL PRODUCT INFORMATION OR COPIES OF DRAWINGS AND TECHNICAL DOCUMENTS	PRODUCT INFORMATION CENTER 1-800-522-6752
FOR APPLICATION TOOLING INFORMATION	TOOLING ASSISTANCE CENTER 1-800-722-1111
FOR ORDER ENTRY	1-800-526-5142

THIS DRAWING IS A CONTROLLED DOCUMENT FOR AMP INCORPORATED. IT IS SUBJECT TO CHANGE AND THE CONTROLLING ENGINEERING ORGANIZATION SHOULD BE CONTACTED FOR THE LATEST REVISION.

MAX RECOMMENDED OPERATING TEMPERATURE: 105°C [221°F] MAX

VOLTAGE RATING: 600V MAX (1000V FIXTURE OR SIGN)

CIRCULAR MIL AREA: 1.04-2.62mm² [2,050-5,180] SOLID OR STRANDED

THIS DRAWING IS A CONTROLLED DOCUMENT.

DIMENSIONS: mm [INCHES]

TOLERANCES UNLESS OTHERWISE SPECIFIED:

0 PLC	± -
1 PLC	± -
2 PLC	± 0.20 [.008]
3 PLC	± -
4 PLC	± -
ANGLES	± -

MATERIAL 4

FINISH TIN PER ASTM B545

DWN	L OLMEDA	05SEP95
CHK	M ELLIS	05SEP95
APVD	G NGO	05SEP95
PRODUCT SPEC	UL 486A	
APPLICATION SPEC	—	
WEIGHT	—	

TE Connectivity

NAME: TERMINAL, SPADE, FLANGED, PLASTI-GRIP, WIRE SIZE: 16-14 AWG

SIZE	CAGE CODE	DRAWING NO	RESTRICTED TO
A3	00779	C-324170	—

CUSTOMER DRAWING | SCALE 6:1 | SHEET 1 OF 1 | REV F

1470-19 (1/15)

Mouser Electronics

Authorized Distributor

Click to View Pricing, Inventory, Delivery & Lifecycle Information:

TE Connectivity:
324170