THIS DRAWING IS UNPUBLISHED. RELEASED FOR PUBLICATION 20
© COPYRIGHT 20 BY - ALL RIGHTS RESERVED.

REVISIONS					
F	LTR	DESCRIPTION	DATE	DWN	APVD
	B	REVISED PER ECO-15-008273	25JUN2015	DD	GK
	B1	REV PER ECO-17-012499	24AUG2017	RGV	GK

BOM								
QUANTITY		ITEM	DESCRIPTION	SUPPLIER PART NUMBER	MATERIAL SPECIFICATION	RECYCLING CODE	COLOR	WEIGHT (GRAM)
INDEX B	INDEX A							
-	1	1	HOUSING, KEYING OPTION "A"	1438529-1	30% GF PBT	PBT-GF30	BLACK	49.3g
1	-	2	HOUSING, KEYING OPTION "B"	1438529-2	30% GF PBT	PBT-GF30	NATURAL	49.3g
1	1	3	TPA	1438531-1	15% GF PBT	PBT-GF15	RED	5.3g
1	1	4	LEVER	1587130-1	35% GF NYLON	PA66-GF35	LIGHT GRAY	7.0g
1	1	5	END SEAL COVER	1438533-1	15% GF PBT	PBT-GF15	BLACK	6.3g
1	1	6	END SEAL GROMMET	2203539-1	SILICON	VMQ	RUST RED	4.9g
1	1	7	RING SEAL	1587133-1	SILICON	VMQ	DARK BLUE	1.4g

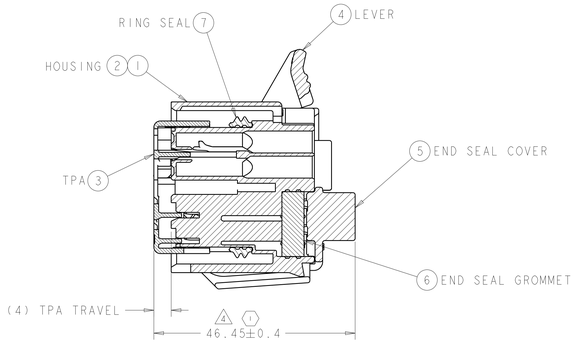

SECTION A-A

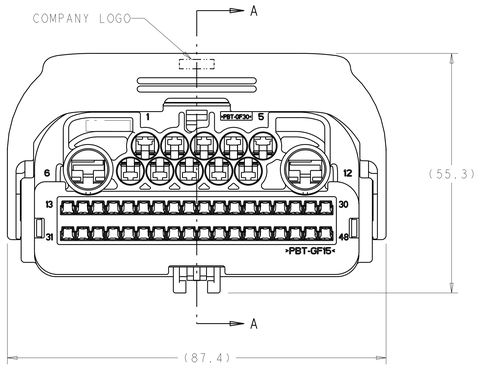

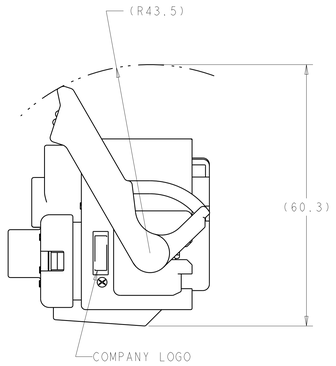

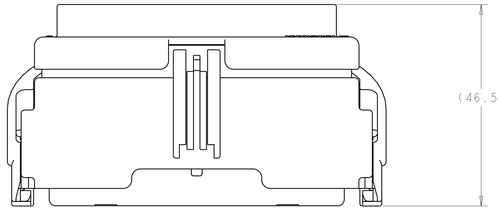

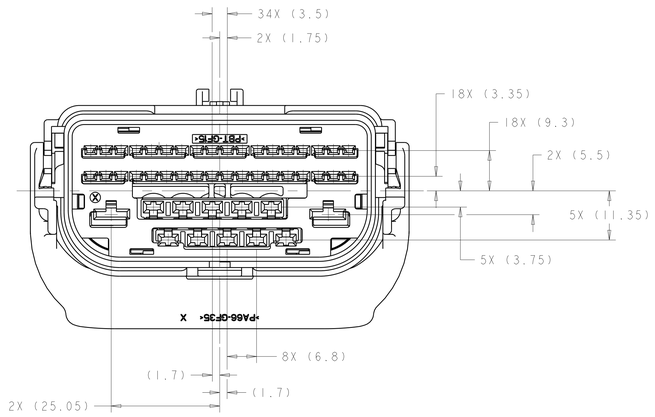

APPLICABLE COMPONENTS (FOR REFERENCE ONLY)				APPLICABLE WIRE SIZES (FOR REFERENCE ONLY)1	COMPONENT MATING PART NUMBER
DESCRIPTION	COLOR/ PLATING	SUPPLIER	SUPPLIER PART NUMBER		
CAVITY PLUG - 6.3mm	GREEN	YAZAKI	7158-3080-60	N/A	N/A
CAVITY PLUG - 2.8mm	BLUE	YAZAKI	7158-3114-90	N/A	N/A
5 TERMINAL - FEMALE 1.5mm	TIN	TE	638652-1	16 AWG OR METRIC EQUIVALENT	1488657-1
5 TERMINAL - FEMALE 1.5mm	TIN	TE	638652-2	18-20 AWG OR METRIC EQUIVALENT	1488657-2
TERMINAL - FEMALE 2.8mm	TIN	TE	1326032-2	20 AWG OR METRIC EQUIVALENT	1326031-2
TERMINAL - FEMALE 2.8mm	TIN	TE	1326032-3	18 AWG OR METRIC EQUIVALENT	1326031-3
TERMINAL - FEMALE 2.8mm	TIN	TE	1326032-4	16 AWG OR METRIC EQUIVALENT	1326031-4
TERMINAL - FEMALE 2.8mm	TIN	TE	1326032-5	14 AWG OR METRIC EQUIVALENT	1326031-5
TERMINAL - FEMALE 2.8mm	TIN	TE	1326032-6	12 AWG OR METRIC EQUIVALENT	1-1326031-1
CABLE SEAL - 2.8mm	GREEN	YAZAKI	7158-3111-60	1.2-1.9mm WIRE O.D.	N/A
CABLE SEAL - 2.8mm	YELLOW	YAZAKI	7158-3112-70	1.8-2.3mm WIRE O.D.	N/A
CABLE SEAL - 2.8mm	WHITE	YAZAKI	7158-3113-40	2.1-3.0mm WIRE O.D.	N/A
CABLE SEAL - 2.8mm	LT GRAY	YAZAKI	7158-3110-40	3.1-3.3mm WIRE O.D.	N/A
TERMINAL - FEMALE 6.3mm	TIN	YAZAKI	7116-4140-02	20-16 AWG OR METRIC EQUIVALENT	7114-4140-02
TERMINAL - FEMALE 6.3mm	TIN	YAZAKI	7116-4141-02	14 AWG OR METRIC EQUIVALENT	7114-4141-02
TERMINAL - FEMALE 6.3mm	TIN	YAZAKI	7116-4142-02	12 AWG OR METRIC EQUIVALENT	7114-4142-02
TERMINAL - FEMALE 6.3mm	TIN	YAZAKI	7116-4143-02	10 AWG OR METRIC EQUIVALENT	7114-4143-02
CABLE SEAL - 6.3mm	RED	YAZAKI	7158-3081-50	1.4-2.3mm WIRE O.D.	N/A
CABLE SEAL - 6.3mm	BLUE	YAZAKI	7158-3082-90	2.1-3.0mm WIRE O.D.	N/A
CABLE SEAL - 6.3mm	BLACK	YAZAKI	7158-3083	3.0-3.8mm WIRE O.D.	N/A
CABLE SEAL - 6.3mm	LT GRAY	YAZAKI	7158-3084-40	3.8-4.05mm WIRE O.D.	N/A
ANTI-ROTATION CLIP	BLACK	TE	1437839-1	N/A	N/A

NOTE: SEE SUPPLIER DRAWINGS FOR LATEST INFORMATION AND CRIMP SPECIFICATIONS

1. PRODUCT QUALIFICATION PER USCAR-2 , REV 4
   REFERENCE DVP&R B046819-DVPR-03, WITH THE
   FOLLOWING EXCEPTIONS:
   A. 5.4.5.3: MIN FORCE REQUIRED TO REMOVE TPA FROM HOUSING IS 15N.
   B. 5.4.3.3: MIN FORCE TO REMOVE CONNECTORS FROM PRE-MATE CONDITION IS 10N.

2. PRINT JULIAN DATE CODE (YYDDD), 4 DIGIT PART NUMBER CODE (28**)
   IN THIS LOCATION AT ASSEMBLY. ** REPRESENTS ASSEMBLY DASH NUMBER. LOCATION TBD.

3. MATES WITH ASSEMBLY SHOWN ON DRAWING 776729.

4 TPA SHOWN IN PRE-SET POSITION. SEE TE INSTRUCTION SHEET 408-8957 FOR PROPER POSITIONING OF TPA, AND TE INSTRUCTION SHEET 408-8929 FOR APPLICATION USE OF THE CONNECTOR SYSTEM.

5 TERMINAL CAVITIES 13 - 48 ARE RESTRICTED TO WIRE O.D. RANGE OF 1.40 - 2.34mm.

THIS DRAWING IS A CONTROLLED DOCUMENT.

DIMENSIONS: mm
TOLERANCES UNLESS OTHERWISE SPECIFIED:
0 PLC ±0.3
1 PLC ±0.3
2 PLC ±0.1
3 PLC ±0.1
4 PLC ±0.1
ANGLES ±1°
MATERIAL - -
FINISH - -

DWN R. VESTAL 19JUL2005
CHK R. COBLE 19JUL2005
APVD R. COBLE 19JUL2005
PRODUCT SPEC - -
APPLICATION SPEC - -
WEIGHT 74.1g
CUSTOMER DRAWING

TE Connectivity

NAME 48-WAY, SEALED HYBRID, FEMALE, PLUG ASSEMBLY

SIZE	CAGE CODE	DRAWING NO	RESTRICTED TO
A0	00779	C-776728	-

SCALE 2:1 SHEET 1 OF 2 REV B1

4806 (3/13)

THIS DRAWING IS UNPUBLISHED. RELEASED FOR PUBLICATION 20
© COPYRIGHT 20 BY - ALL RIGHTS RESERVED.

REVISIONS					
P	LTR	DESCRIPTION	DATE	DWN	APVD
	-	SEE SHEET 1	-	-	-

FEMALE HOUSING ASSEMBLY

INDEX A
COLOR: BLACK

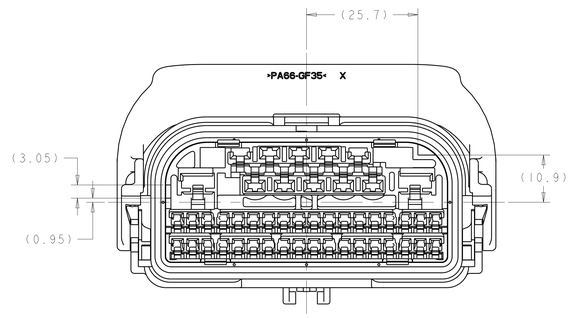

(TPA NOT SHOWN)

INDEX B
COLOR: NATURAL

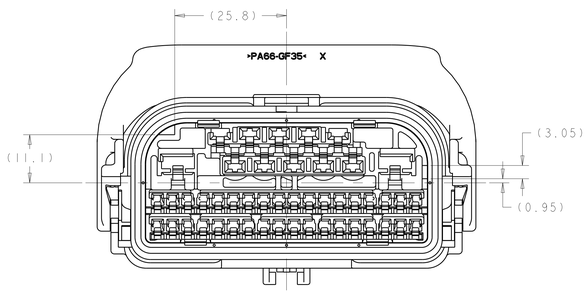

(TPA NOT SHOWN)

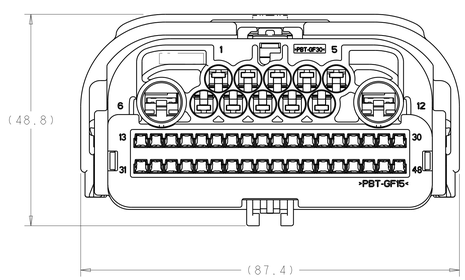

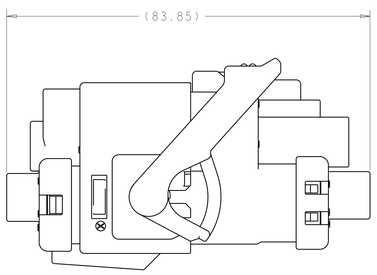

MATED ASSEMBLY

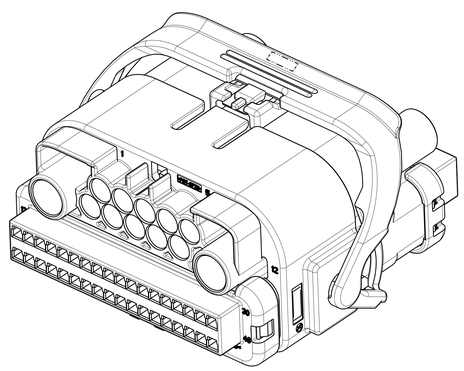

| FEMALE CONNECTOR (PLUG) | | | | |

Mouser Electronics

Authorized Distributor

Click to View Pricing, Inventory, Delivery & Lifecycle Information:

TE Connectivity:

3-776728-4