THIS DRAWING IS UNPUBLISHED. RELEASED FOR PUBLICATION - ,- .
© COPYRIGHT - By - ALL RIGHTS RESERVED.

REVISIONS					
P	LTR	DESCRIPTION	DATE	DWN	APVD
	R1	REVISED PER ECO-16-001847	19JUL2016	NK	MZ

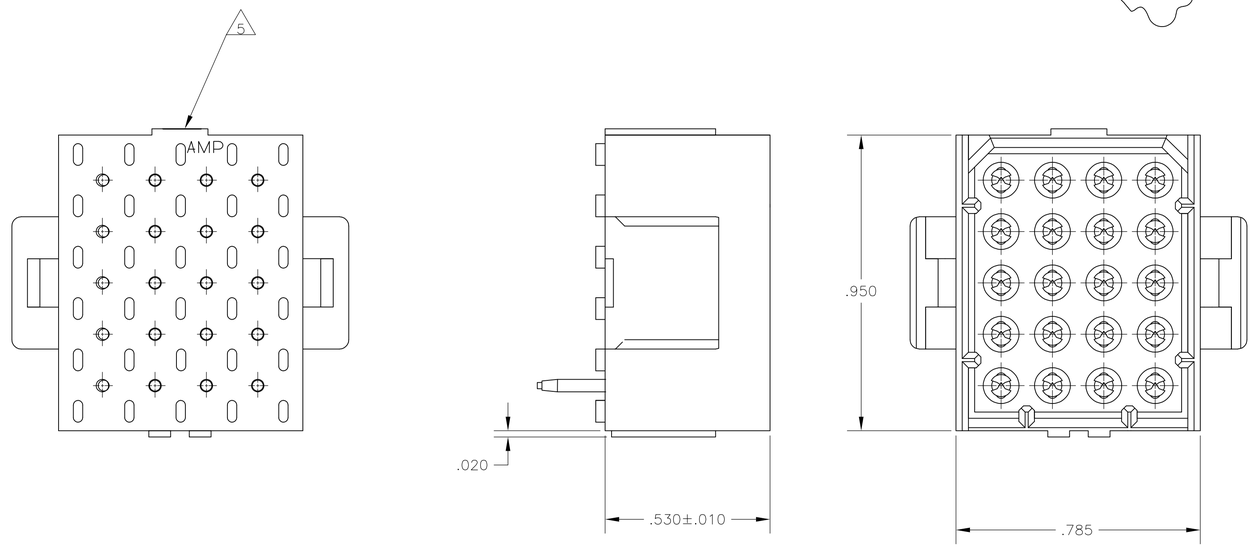

1 FITS SOCKET HOUSING 640524.

2 ASSEMBLY CONFORMS TO AMP SOLDERABILITY SPEC. 109-11-3.

3 FOR USE WITH .063 THICK P.C. BOARD.

4 CONTACT IS PLATED OVERALL WITH.000050 NICKEL, THEN .000030 GLD OVER CONTACT LENGTH INDICATED AND .000150 MATTE TIN-LEAD ON SOLDER TAIL END.

5 UL AND CSA LOGO LOCATED ON THIS SURFACE.

6 FOR USE WITH .120 THICK P.C. BOARD.

7 CONTACT IS PLATED OVERALL WITH.000050 NICKEL, THEN .000030 GLD OVER CONTACT LENGTH INDICATED AND .000150 MATTE TIN ON SOLDER TAIL END.

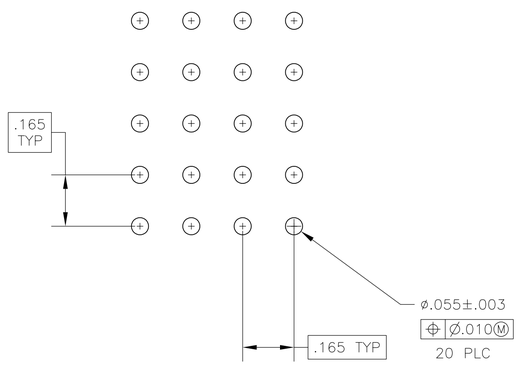

RECOMMENDED P.C. BOARD LAYOUT

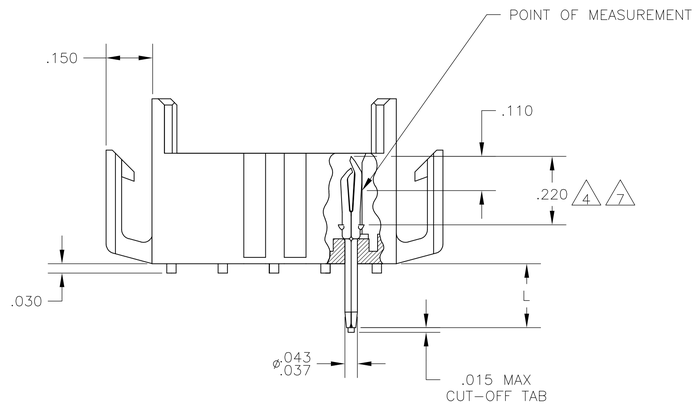

	.210 6	BRICK RED	GOLD 7	2-640504-4
	.150 3	BRICK RED	GOLD 7	2-640504-2
	.210 6	BRICK RED	GOLD 4	640504-4
	.210 6	BRICK RED	PRE-TIN	640504-3
OBSOLETE	.150 3	BRICK RED	GOLD 4	~~640504-2~~
	.150 3	BRICK RED	PRE-TIN	640504-1
	"L" +.010 -.020	HOUSING COLOR	PIN FINISH	PART NUMBER

.010	0.25	.055	1.40	.220	5.59	-	-
.008	0.20	.043	1.09	.210	5.33	-	-
.005	0.13	.037	0.94	.165	4.19	-	-
.003	0.08	.030	0.76	.150	3.81	.950	24.13
.000050	0.00127	.020	0.51	.110	2.79	.785	19.94
.000030	0.00076	.015	0.38	.063	1.60	.530	13.46
IN	MM	IN	MM	IN	MM	IN	MM

CONVERSION TABLE

THIS DRAWING IS A CONTROLLED DOCUMENT.

DIMENSIONS: INCHES

TOLERANCES UNLESS OTHERWISE SPECIFIED:
0 PLC ± -
1 PLC ± -
2 PLC ± -
3 PLC ± .005
4 PLC ± -
ANGLES ± 0° 30'

MATERIAL: HOUSING:FLAME RETARDANT NYLON, UL 94V-0 PIN, .008 PH BRZ.

FINISH: SEE TABLE

DWN J. HUFFMAN 28APR98
CHK R. SWING 28APR98
APVD T. REDDICK 28APR98

PRODUCT SPEC —
APPLICATION SPEC —
WEIGHT —

TE Connectivity

NAME: HEADER ASSEMBLY, PIN, 20 POSITION, MR.

SIZE A1 | CAGE CODE 00779 | DRAWING NO C-640504 | RESTRICTED TO —

CUSTOMER DRAWING | SCALE 4:1 | SHEET 1 OF 1 | REV R1

4805 (1/15)

Mouser Electronics

Authorized Distributor

Click to View Pricing, Inventory, Delivery & Lifecycle Information:

TE Connectivity:

640504-4