REVISIONS			
REV	DESCRIPTION	DATE	APPROVED
01a	RELEASED	3/16/84	R. Guerra

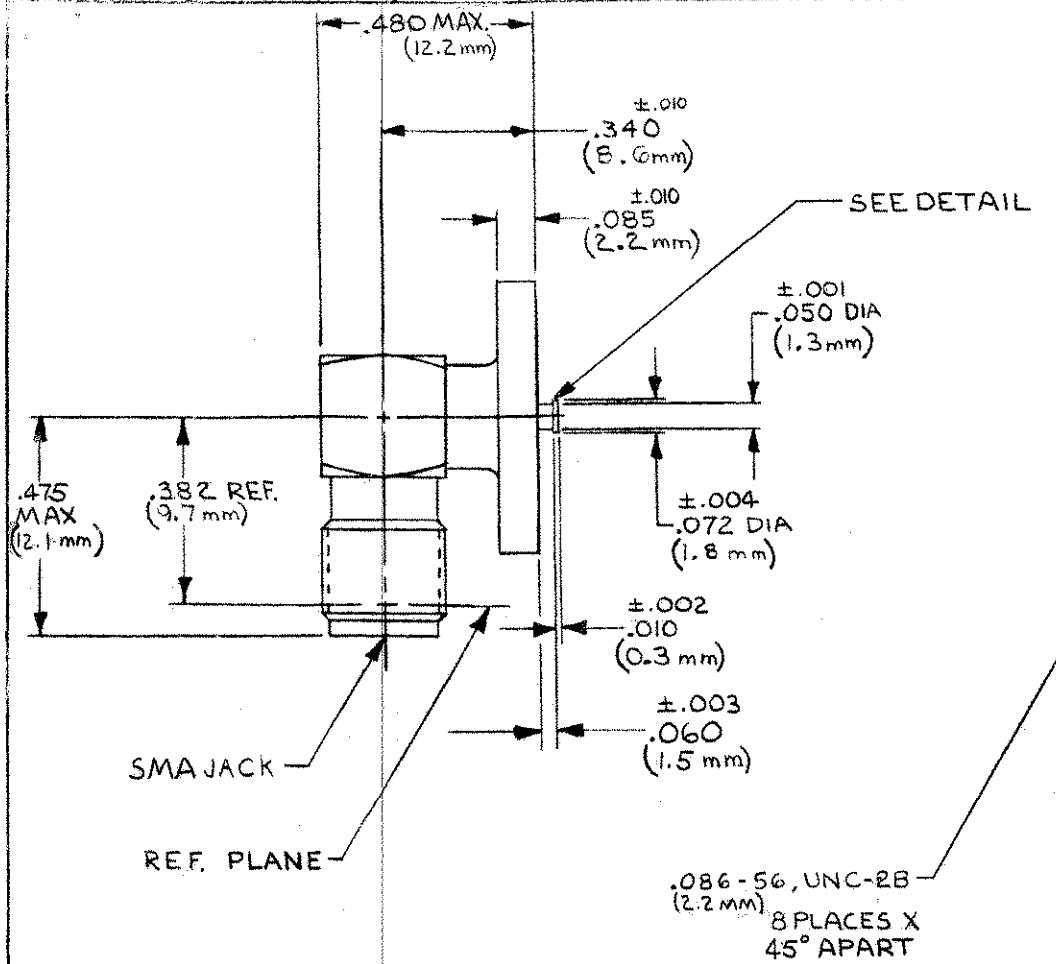

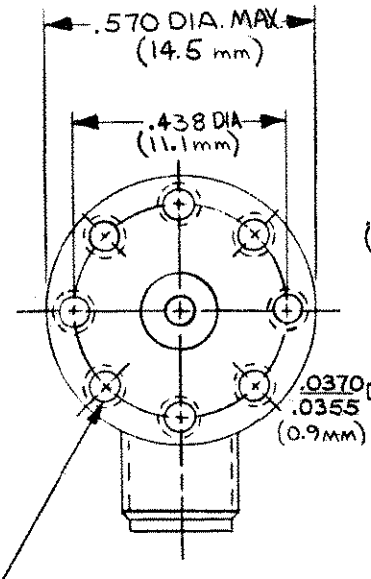

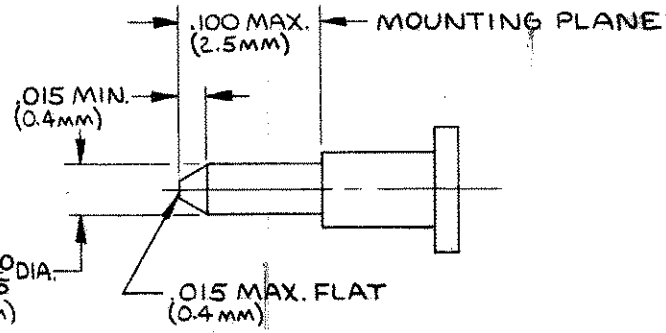

DETAIL
TRANSITION END

COMPONENT	MATERIAL	FINISH
CENTER CONTACT	BERYLLIUM COPPER PER QQ-C-530, ALLOY 173	GOLD PLATE PER MIL-G-45204 OVER COPPER PLATE PER MIL-C-14550
DIELECTRIC	TFE FLOUROCARBON PER MIL-P-19468 AND FED SPEC L-P-403	N/A
HOUSING	STAINLESS STEEL PER ASTM-A484 AND ASTM-A582, TYPE 303	PASSIVATE PER QQ-P-35

NOTES:

1. CAPTURED CENTER CONTACT

UNLESS OTHERWISE SPECIFIED DIMENSIONS ARE IN INCHES
TOLERANCE ON
FRAC. ± 1/64 DEC. ± .008 ANGLES ± 1°

THESE DRAWINGS AND SPECIFICATIONS ARE THE PROPERTY OF OMNI SPECTRA INCORPORATED AND SHALL NOT BE REPRODUCED OR COPIED OR USED IN WHOLE OR IN PART AS THE BASIS FOR THE MANUFACTURE OR SALE OF ITEM(S) WITHOUT WRITTEN PERMISSION

DRAWN D. Beard DATE 3-16-84
CHECKED R Guerra 3/16/84
APP'D R Guerra 3/16/84
USE ASS'Y PROCEDURE
Nº A.P. N/A

Omni Spectra — MICROWAVE CONNECTOR DIVISION

TITLE SMA SURFACE LAUNCH RIGHT ANGLE PLUG STRIPLINE TURRET TERMINAL (M83517/8-31001)

SIZE	CODE IDENT NO.		REV
B	26805	2068-8001-92	01a

SCALE N.T.S. SHEET 1 OF 1

CUSTOMER 1053451
SHEET 1 OF 1
REV 0

Mouser Electronics

Authorized Distributor

Click to View Pricing, Inventory, Delivery & Lifecycle Information:

TE Connectivity:

1053451-1