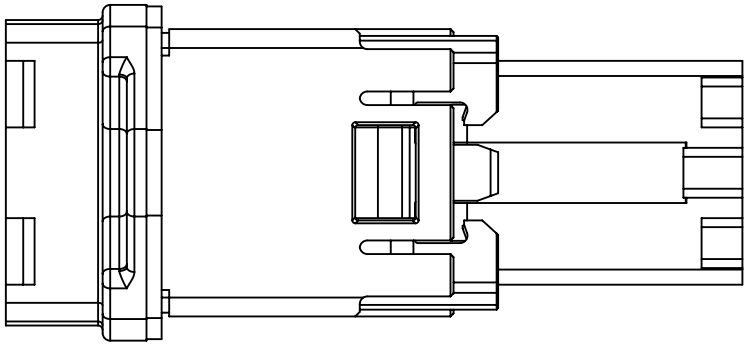

PANEL CUT:

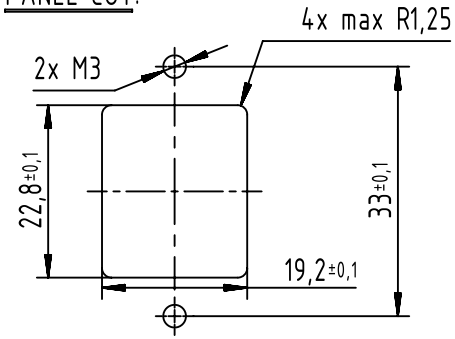

Thickness panel: 1mm to 6mm
M3 screwing torque: 0,3 to 0,5 Nm

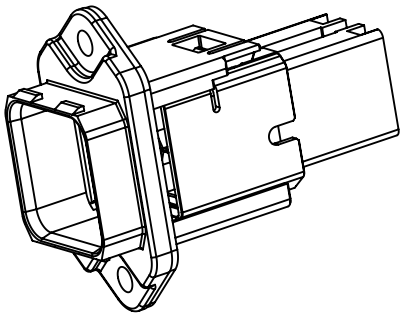

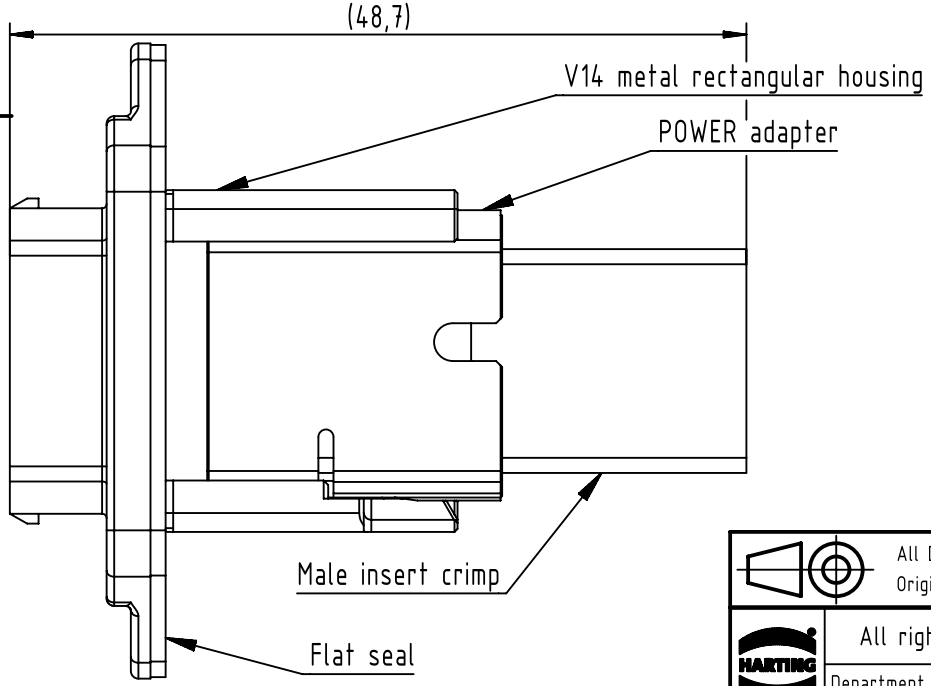

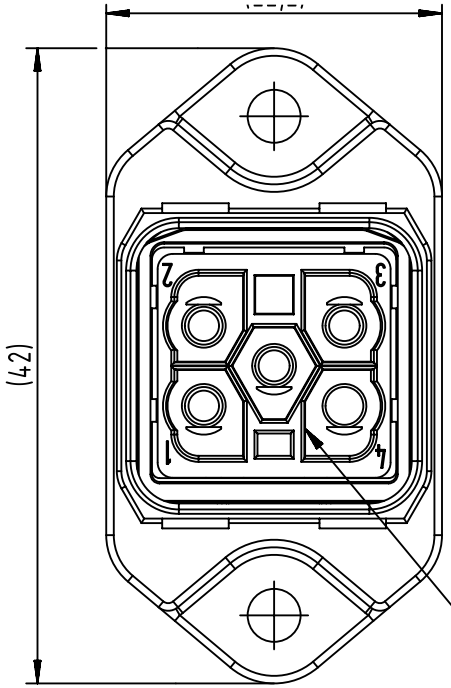

MATING FACE according to IEC 61076-3-118

All Dimensions in mm Original Size DIN A4	Scale 2:1	Free size tol.		Ref. Sub.	
All rights reserved Department EC PD - FR	Created by BARLEMONT	Inspected by DE VANSSAY	Standardisation HOFFMANN	Date 2014-10-15	State Final Release
HARTING Electronics GmbH D-32339 Espelkamp	Title V14 PFT metal housing for POWER insert				Doc-Key / ECM-Nr. 100219336/UGD/002/B 500000080278
	Type TB	Number 09352310311		Rev. B	Page 1/1

A4

Mouser Electronics

Authorized Distributor

Click to View Pricing, Inventory, Delivery & Lifecycle Information:

HARTING:
09352310311