THIS DRAWING IS UNPUBLISHED. RELEASED FOR PUBLICATION -,- .
© COPYRIGHT - By - ALL RIGHTS RESERVED.

LOC	DIST
CM	00

REVISIONS

P	LTR	DESCRIPTION	DATE	DWN	APVD
	A2	REVISED PER ECO-11-004820	11MAR11	RK	HMR

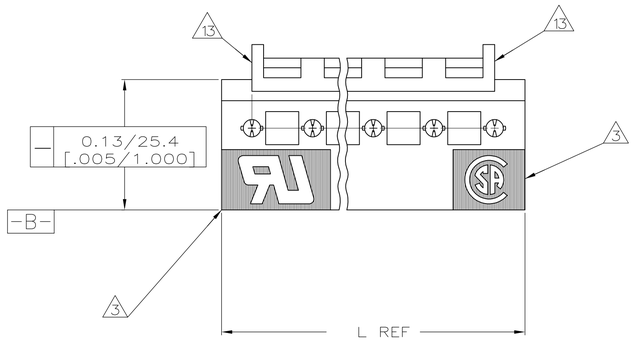

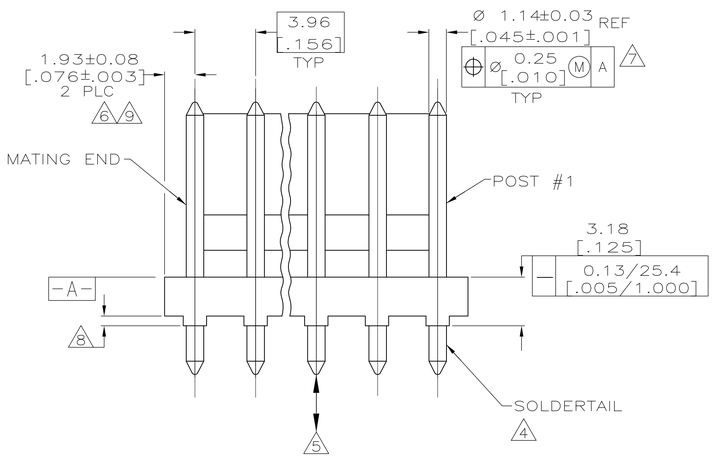

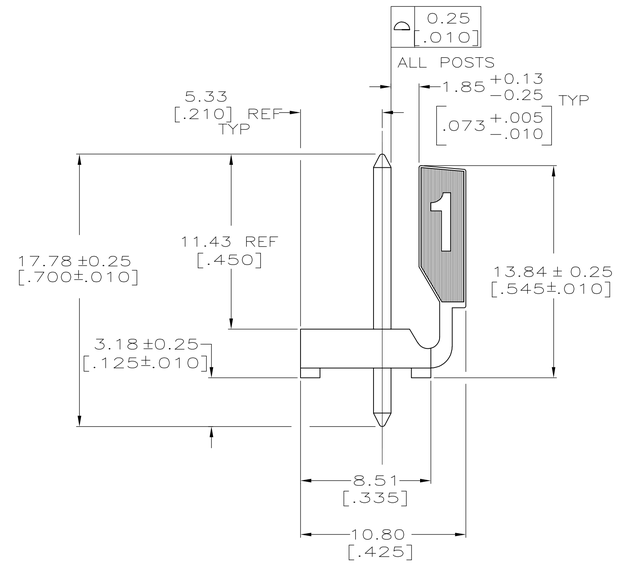

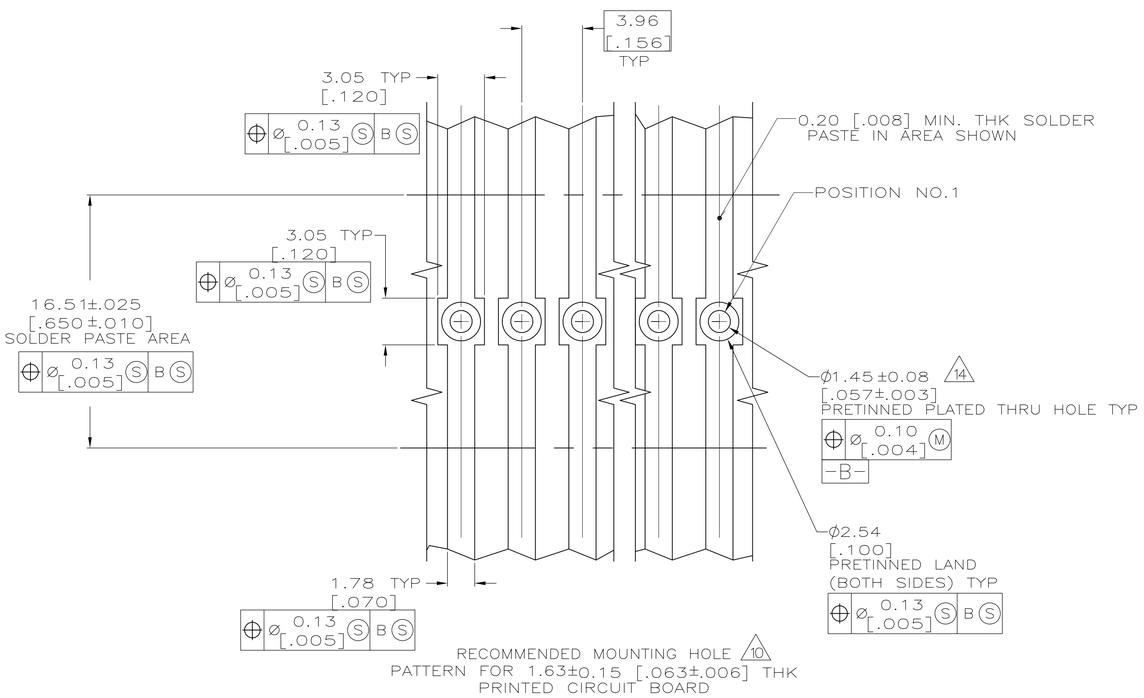

1. MATERIAL

   HOUSING: POLYAMIDE NYLON,UL94V-0.
   POST: COPPER ALLOY

2. FINISH

   HOUSING: BLACK
   POST: BRIGHT TIN-LEAD (93/7) PLATE, FOR -2 THRU -12 OR MATTE TIN FOR -32 THRU -42 0.00380-0.00880[.000150-.000350] THK OVER NICKEL UNDERPLATE,0.00130[.000050] MIN THK.

3. UL MARKING MAY NOT APPEAR ON THE 2 OR 3 POSITION SIZES. CSA MARKING MAY NOT APPEAR ON THE 2 POSITION SIZE.

4. POST SOLDERTAILS COMPLY WITH AMP SOLDERABILITY SPEC 109-11-2.

5. POST WITHSTANDS 13.34N [3 LB] MIN AXIAL FORCE IN EITHER DIRECTION WITHOUT DISLODGING.

6. APPLIES AT -A- .

7. APPLIES WHEN THE HEADER IS STRAIGHT.

8. PLASTIC PROJECTIONS PERMITTED IN THIS ZONE.

9. COORDINATE DIMENSIONS APPLIES FROM THE CENTER OF THE ACTUAL FEATURE.

10. DIMENSION APPLY TO COMPONENT SIDE OF BOARD UNLESS OTHERWISE NOTED.

11. DIMENSIONS IN BRACKETS ARE IN INCHES.

12. ALL POSITION SIZES HAVE THE BACKWALL NOTCHED ON BOTH ENDS AS SHOWN. THE 2 THRU 5 POSITION SIZES HAVE SOLID BACKWALLS. POSITION SIZES 6 AND ABOVE HAVE AN INTERRUPTED BACKWALL AT VARIOUS LOCATIONS (SEE TABLE FOR INTERRUPTION(S) LOCATIONS).

13. EDGE OF POLARIZING LOCK WALL TO BE IN LINE WITH CENTERLINE OF ADJACENT POST WITHIN ±0.13 [.005].

14. ONE HOLE MAY BE UNDERSIZED (1.17-1.3 [.046-.051]) FOR BOARD RETENTION.

15. MAXIMUM TEMPERATURE EXPOSURE DURING REFLOW SOLDERING NOT TO EXCEED 280° C (536° F).

16. OBSOLETE PARTS: OBSOLETE CIS STREAMLINING PER D.RENAUD/D.SINISI

	BACKWALL INTERRUPTION(S) BETWEEN POST	L	NO OF POSITIONS	PART NO
	4&5, 8&9	47.42 [1.867]	12	4-647648-2
	4&5, 7&8	43.46 [1.711]	11	4-647648-1
	3&4, 7&8	39.50 [1.555]	10	4-647648-0
	3&4, 6&7	35.53 [1.399]	9	3-647648-9
	4&5	31.57 [1.243]	8	3-647648-8
	4&5	27.61 [1.087]	7	3-647648-7
	3&4	23.65 [.931]	6	3-647648-6
	NONE	19.69 [.775]	5	3-647648-5
	NONE	15.72 [.619]	4	3-647648-4
	NONE	11.76 [.463]	3	3-647648-3
	NONE	7.80 [.307]	2	3-647648-2
16 SUPERSEDED BY 4-647648-2	4&5, 8&9	47.42 [1.867]	12	~~1-647648-2~~
16 SUPERSEDED BY 4-647648-1	4&5, 7&8	43.46 [1.711]	11	~~1-647648-1~~
16 SUPERSEDED BY 4-647648-0	3&4, 7&8	39.50 [1.555]	10	~~1-647648-0~~
16 SUPERSEDED BY 3-647648-9	3&4, 6&7	35.53 [1.399]	9	~~647648-9~~
	4&5	31.57 [1.243]	8	647648-8
	4&5	27.61 [1.087]	7	647648-7
16 SUPERSEDED BY 3-647648-6	3&4	23.65 [.931]	6	~~647648-6~~
16 SUPERSEDED BY 3-647648-5	NONE	19.69 [.775]	5	~~647648-5~~
	NONE	15.72 [.619]	4	647648-4
16 SUPERSEDED BY 3-647648-3	NONE	11.76 [.463]	3	~~647648-3~~
	NONE		2	647648-2

THIS DRAWING IS A CONTROLLED DOCUMENT.

DWN K. WHITAKER 21JUN2005
CHK D. BOSSI 21JUNE2005
APVD D. BOSSI 21JUNE2005

DIMENSIONS: mm [INCHES]

TOLERANCES UNLESS OTHERWISE SPECIFIED:
0 PLC ± -
1 PLC ± -
2 PLC ± 0.13[.005]
3 PLC ± -
4 PLC ± -
ANGLES ± 1°

MATERIAL 1
FINISH 2

PRODUCT SPEC —
APPLICATION SPEC —
WEIGHT —

TE Connectivity

NAME MTA-156 HEADER ASSEMBLY, HIGH TEMP,STRAIGHT .045 ROUND POST,TIN OR TIN-LEAD

SIZE	CAGE CODE	DRAWING NO	RESTRICTED TO
A1	00779	C-647648	—

CUSTOMER DRAWING SCALE 5:1 SHEET 1 OF 1 REV A2

METRIC

4805 (3/11)

Mouser Electronics

Authorized Distributor

Click to View Pricing, Inventory, Delivery & Lifecycle Information:

TE Connectivity:

3-647648-9