THIS DRAWING IS UNPUBLISHED. RELEASED FOR PUBLICATION - ,N/A .
© COPYRIGHT N/A By - ALL RIGHTS RESERVED.

| LOC | DIST |
|---|---|
| — | — |

REVISIONS

| P | LTR | DESCRIPTION | DATE | DWN | APVD |
|---|---|---|---|---|---|
| | C | REV PER ECO 15-015343 | 12-10-15 | CT | CD |

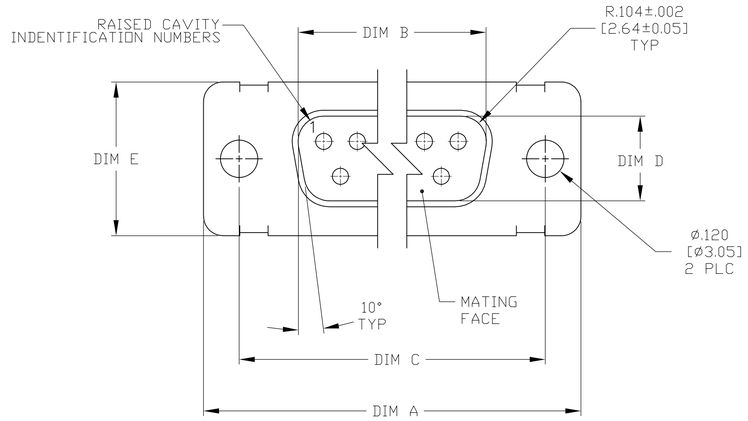


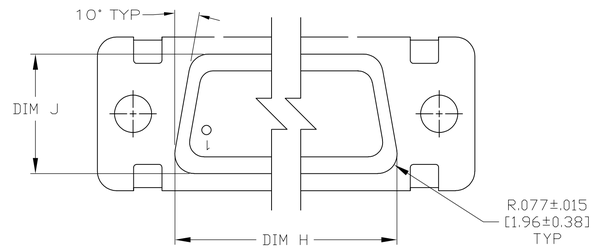


VIEW Z—Z

1. SEE SHEET 2 FOR RECOMMENDED P.C. BOARD LAYOUT. TRUE POSITION TOLERANCE FOR P.C.BOARD LAYOUT IS .010 [0.25] AT MAX MATERIAL CONDITION. SUGGESTED BOARD THICKNESS IS .062 [1.57]
2. THE CONNECTORS DESCRIBED IN THIS DOCUMENT MEET THE REQUIREMENTS OF MIL-DTL-24308 AND MATE WITH ANY PLUG CONNECTOR WITH SAME INSERT ARRANGEMENT.
3. MARKED WITH .047 [1.19]-.062 [1.57] HIGH CHARACTERS. FAR SIDE REFERS TO THE WIDE SIDE OF THE KEYSTONE. NEAR SIDE REFERS TO THE NARROW SIDE OF THE KEYSTONE. IF THE REAR SHELL IS TOO SMALL FOR THE ENTIRE MILITARY PART NUMBER, MARKING SHALL BE LOCATED AS FOLLOWS:
   A. "M24308" ON FRONT SHELL, FAR SIDE.
   B. SLASH SHEET AND DASH NUMBER ON REAR SHELL, FAR SIDE.
   C. "AMP" AND DATE CODE ON FRONT SHELL, NEAR SIDE.
   D. TE PART NUMBER ON REAR SHELL, NEAR SIDE.

   IF THE FRONT SHELL IS TOO SMALL FOR "AMP", TE PART NUMBER AND DATE CODE, MARKING SHALL BE SPLIT AS FOLLOWS:
   A. TE PART NUMBER ON REAR SHELL, NEAR SIDE.
   B. "AMP" AND DATE CODE ON FRONT SHELL, NEAR SIDE.
   C. MILITARY PART NUMBER ON REAR SHELL, FAR SIDE.
4. REQUIREMENT FOR FULL PIN DIAMETER EXTENSION: .159 [4.04 MIN FOR SHELL SIZE 1 THRU 2; .150 [3.81] MIN FOR SHELL SIZE 3, 4 & 5.
5. SOLDER DIPPED PER J-STD-001 WITH Sn63 SOLDER PER J-STD-006 IN THE ENTIRE AREA OF DIMENSION SHOWN. (1757833-6 THRU -10 ONLY.)
6. MEETS SOLDERABLITY PER MIL-STD-202 METHOD 208.
7. SPACERS (QTY = 2) ARE SUPPLIED WITH CONNECTOR; NOT ATTACHED.

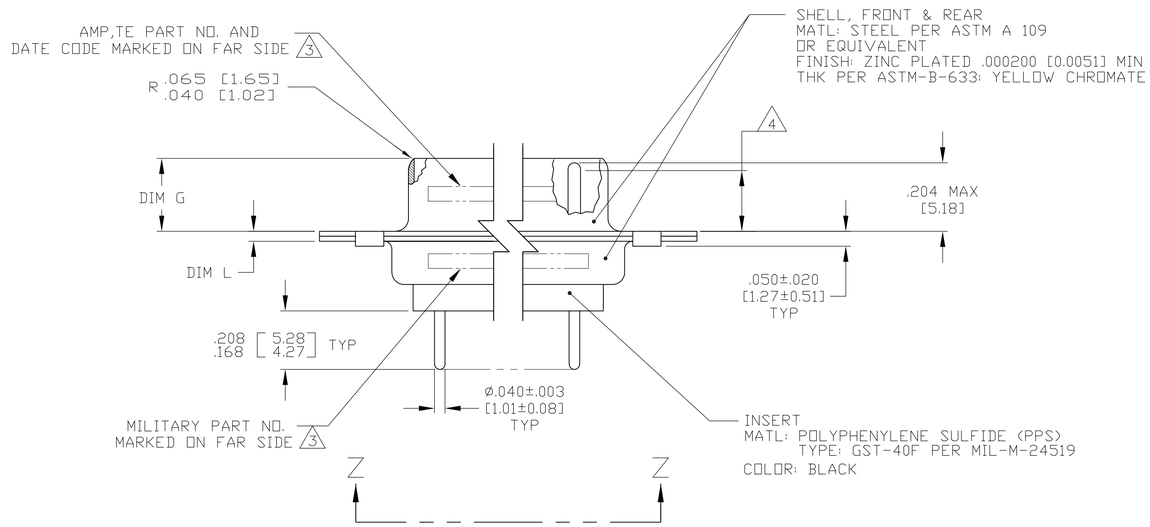


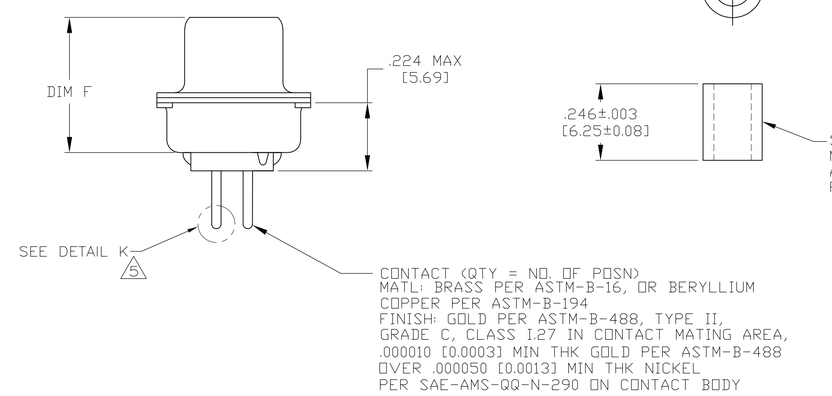


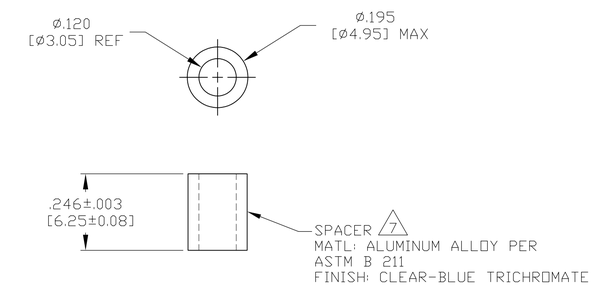


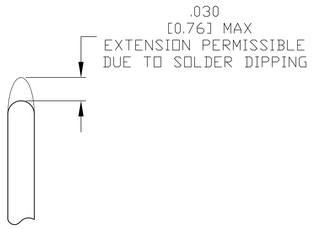


DETAIL K
SCALE 10:1 5
FOR 1757833-6 THRU -10 ONLY

| L | J | H | G | F | E | D | C | B | A | INSERT ARRANGEMENT | NO OF POS | SHELL SIZE | MILITARY P/N ON CONNECTOR 3 | TE P/N ON CONNECTOR 3 | PART NUMBER |
|---|---|---|---|---|---|---|---|---|---|---|---|---|---|---|---|
| .049 [1.24] .029 [0.74] | .544 [13.82] .524 [13.31] | 2.188 [55.58] 2.168 [55.07] | .236 [5.99] .224 [5.69] | .436 [11.07] .416 [10.57] | .620 [15.75] .590 [14.99] | .446 [11.33] .436 [11.07] | 2.411 [61.24] 2.401 [60.99] | 2.084 [52.93] 2.074 [52.68] | 2.650 [67.31] 2.620 [66.55] | MS18277-1 | 50 | 5 | M24308/24-23Z | 1757833-5 | 1-1757833-0 6 |
| .049 [1.24] .029 [0.74] | .432 [10.97] .412 [10.46] | 2.282 [57.96] 2.262 [57.45] | .236 [5.99] .224 [5.69] | .436 [11.07] .416 [10.57] | .509 [12.93] .479 [12.17] | .334 [8.48] .324 [8.23] | 2.505 [63.63] 2.495 [63.37] | 2.187 [55.55] 2.177 [55.30] | 2.744 [69.70] 2.714 [68.94] | MS18276-1 | 37 | 4 | M24308/24-22Z | 1757833-4 | 1757833-9 6 |
| .049 [1.24] .029 [0.74] | .432 [10.97] .412 [10.46] | 1.635 [41.53] 1.615 [41.02] | .236 [5.99] .224 [5.69] | .436 [11.07] .416 [10.57] | .509 [12.93] .479 [12.17] | .334 [8.48] .324 [8.23] | 1.857 [47.17] 1.847 [46.91] | 1.539 [39.09] 1.529 [38.84] | 2.103 [53.42] 2.073 [52.65] | MS18275-1 | 25 | 3 | M24308/24-21Z | 1757833-3 | 1757833-8 6 |
| .040 [1.02] .020 [0.51] | .432 [10.97] .412 [10.46] | 1.093 [27.76] 1.073 [27.25] | .238 [6.05] .229 [5.82] | .432 [10.97] .412 [10.46] | .509 [12.93] .479 [12.17] | .334 [8.48] .324 [8.23] | 1.317 [33.45] 1.307 [33.20] | .999 [25.37] .989 [25.12] | 1.556 [39.52] 1.526 [38.76] | MS18274-1 | 15 | 2 | M24308/24-20Z | 1757833-2 | 1757833-7 6 |
| .040 [1.02] .020 [0.51] | .432 [10.97] .412 [10.46] | .769 [19.53] .749 [19.02] | .238 [6.05] .229 [5.82] | .432 [10.97] .412 [10.46] | .509 [12.93] .479 [12.17] | .334 [8.48] .324 [8.23] | .989 [25.12] .979 [24.87] | .671 [17.04] .661 [16.79] | 1.228 [31.19] 1.198 [30.43] | MS18273-1 | 9 | 1 | M24308/24-19Z | 1757833-1 | 1757833-6 6 |
| .049 [1.24] .029 [0.74] | .544 [13.82] .524 [13.31] | 2.188 [55.58] 2.168 [55.07] | .236 [5.99] .224 [5.69] | .436 [11.07] .416 [10.57] | .620 [15.75] .590 [14.99] | .446 [11.33] .436 [11.07] | 2.411 [61.24] 2.401 [60.99] | 2.084 [52.93] 2.074 [52.68] | 2.650 [67.31] 2.620 [66.55] | MS18277-1 | 50 | 5 | M24308/24-23Z | 1757833-5 | 1757833-5 |
| .049 [1.24] .029 [0.74] | .432 [10.97] .412 [10.46] | 2.282 [57.96] 2.262 [57.45] | .236 [5.99] .224 [5.69] | .436 [11.07] .416 [10.57] | .509 [12.93] .479 [12.17] | .334 [8.48] .324 [8.23] | 2.505 [63.63] 2.495 [63.37] | 2.187 [55.55] 2.177 [55.30] | 2.744 [69.70] 2.714 [68.94] | MS18276-1 | 37 | 4 | M24308/24-22Z | 1757833-4 | 1757833-4 |
| .049 [1.24] .029 [0.74] | .432 [10.97] .412 [10.46] | 1.635 [41.53] 1.615 [41.02] | .236 [5.99] .224 [5.69] | .436 [11.07] .416 [10.57] | .509 [12.93] .479 [12.17] | .334 [8.48] .324 [8.23] | 1.857 [47.17] 1.847 [46.91] | 1.539 [39.09] 1.529 [38.84] | 2.103 [53.42] 2.073 [52.65] | MS18275-1 | 25 | 3 | M24308/24-21Z | 1757833-3 | 1757833-3 |
| .040 [1.02] .020 [0.51] | .432 [10.97] .412 [10.46] | 1.093 [27.76] 1.073 [27.25] | .238 [6.05] .229 [5.82] | .432 [10.97] .412 [10.46] | .509 [12.93] .479 [12.17] | .334 [8.48] .324 [8.23] | 1.317 [33.45] 1.307 [33.20] | .999 [25.37] .989 [25.12] | 1.556 [39.52] 1.526 [38.76] | MS18274-1 | 15 | 2 | M24308/24-20Z | 1757833-2 | 1757833-2 |
| .040 [1.02] .020 [0.51] | .432 [10.97] .412 [10.46] | .769 [19.53] .749 [19.02] | .238 [6.05] .229 [5.82] | .432 [10.97] .412 [10.46] | .509 [12.93] .479 [12.17] | .334 [8.48] .324 [8.23] | .989 [25.12] .979 [24.87] | .671 [17.04] .661 [16.79] | 1.228 [31.19] 1.198 [30.43] | MS18273-1 | 9 | 1 | M24308/24-19Z | 1757833-1 | 1757833-1 |

THIS DRAWING IS A CONTROLLED DOCUMENT.

DIMENSIONS: INCHES

TOLERANCES UNLESS OTHERWISE SPECIFIED:
0 PLC ± –
1 PLC ± –
2 PLC ± –
3 PLC ± .005 [0.13]
4 PLC ± –
ANGLES ± 1°

MATERIAL: SEE CALLOUTS
FINISH: SEE CALLOUTS

DWN C.C.THOMAS 3-28-06
CHK D.MILLER 3-29-06
APVD D.MILLER 3-29-06
PRODUCT SPEC —
APPLICATION SPEC —
WEIGHT —

TE Connectivity

NAME: PLUG ASSEMBLY,AMPLIMITE,POSTED SERIES 109,SIZE 1 THRU 5 —

| SIZE | CAGE CODE | DRAWING NO | RESTRICTED TO |
|---|---|---|---|
| A1 | 00779 | C-1757833 | — |

CUSTOMER DRAWING | SCALE 4:1 | SHEET 1 OF 2 | REV C

4805 (3/11)

THIS DRAWING IS UNPUBLISHED. RELEASED FOR PUBLICATION – ,N/A .
© COPYRIGHT N/A By – ALL RIGHTS RESERVED.

| LOC | DIST |
|---|---|
| — | — |

REVISIONS

| P | LTR | DESCRIPTION | DATE | DWN | APVD |
|---|---|---|---|---|---|
| | – | SEE SHEET #1 | – | — | — |

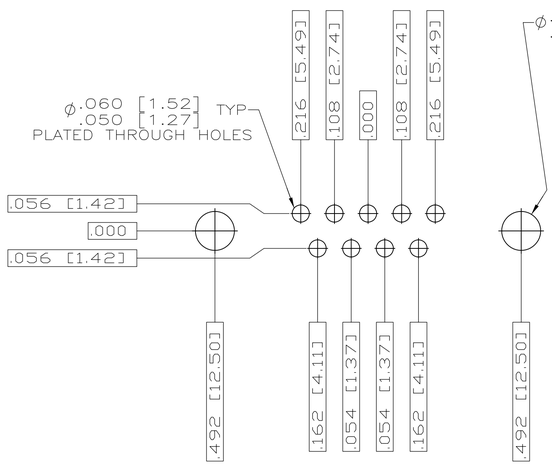


RECOMMENDED P.C. BOARD LAYOUT
SHELL SIZE 1 (9 POSITION)

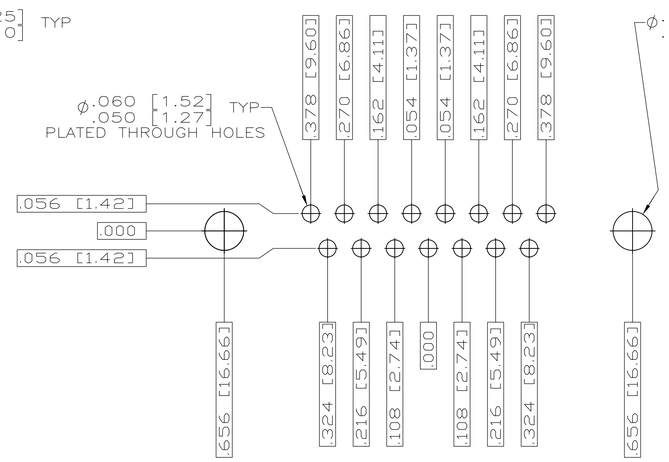


RECOMMENDED P.C. BOARD LAYOUT
SHELL SIZE 2 (15 POSITION) 1

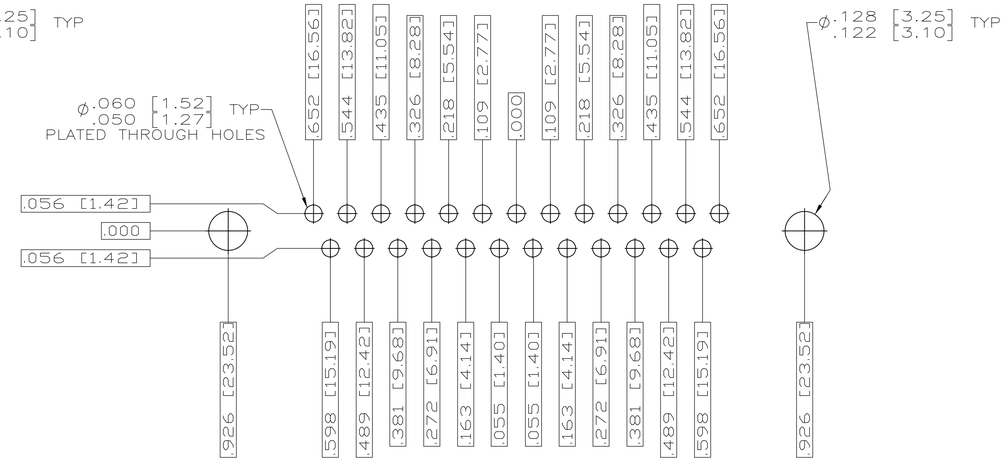


RECOMMENDED P.C. BOARD LAYOUT
SHELL SIZE 3 (25 POSITION) 1

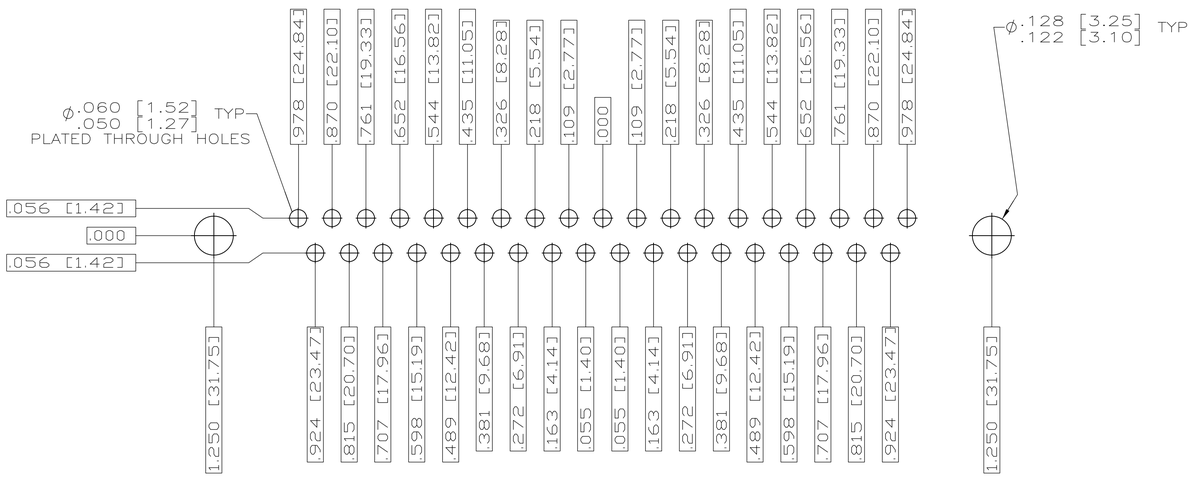


RECOMMENDED P.C. BOARD LAYOUT
SHELL SIZE 4 (37 POSITION) 1

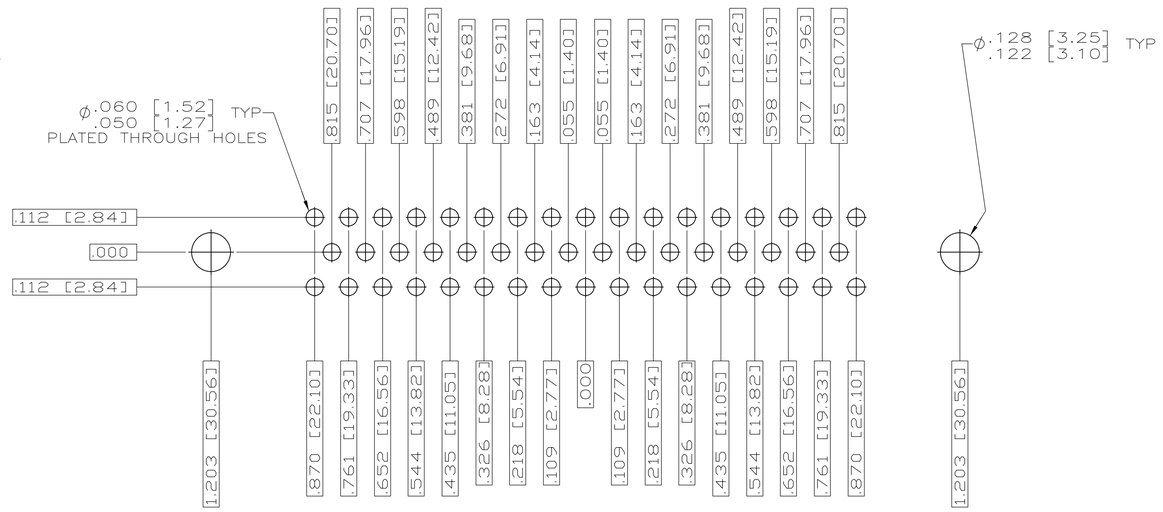


RECOMMENDED P.C. BOARD LAYOUT
SHELL SIZE 5 (50 POSITION)

THIS DRAWING IS A CONTROLLED DOCUMENT.

DIMENSIONS: INCHES

TOLERANCES UNLESS OTHERWISE SPECIFIED:
0 PLC ± –
1 PLC ± –
2 PLC ± –
3 PLC ± .005 [0.13]
4 PLC ± –
ANGLES ± 1°

MATERIAL: SEE CALLOUTS
FINISH: SEE CALLOUTS

DWN C.C.THOMAS 3-28-06
CHK D.MILLER 3-29-06
APVD D.MILLER 3-29-06
PRODUCT SPEC —
APPLICATION SPEC —
WEIGHT —

TE Connectivity

NAME: PLUG ASSEMBLY,AMPLIMITE,POSTED SERIES 109,SIZE 1 THRU 5 –

| SIZE | CAGE CODE | DRAWING NO | RESTRICTED TO |
|---|---|---|---|
| A1 | 00779 | C-1757833 | — |

CUSTOMER DRAWING

| SCALE | SHEET | REV |
|---|---|---|
| 4:1 | 2 OF 2 | C |

# Mouser Electronics

Authorized Distributor

Click to View Pricing, Inventory, Delivery & Lifecycle Information:

TE Connectivity:
1757833-2