THIS DRAWING IS UNPUBLISHED. RELEASED FOR PUBLICATION -,- .
© COPYRIGHT - BY TYCO ELECTRONICS CORPORATION. ALL RIGHTS RESERVED.

LOC	DIST
G	14

REVISIONS

P	LTR	DESCRIPTION	DATE	DWN	APVD
	A1	REV PER ECR 07-016469	18JUL07	JR	TM

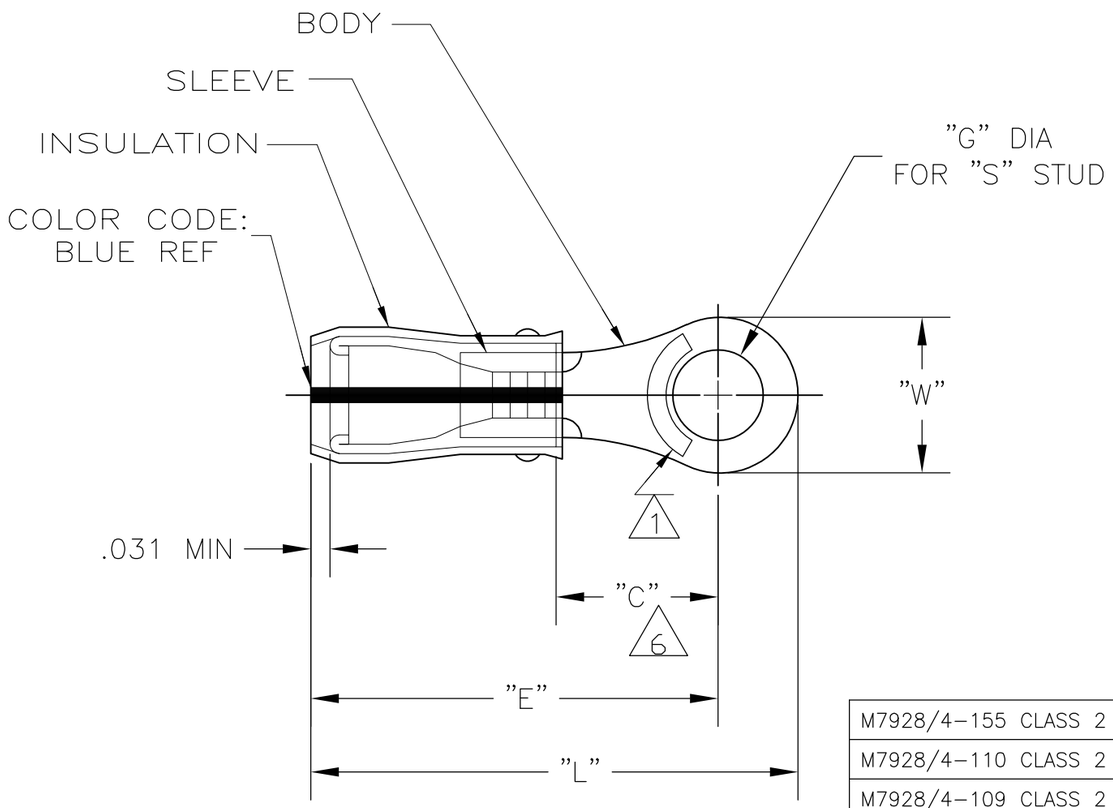

1. STAMP AMP 16-14* APPROX AS SHOWN
2. WIRE INSULATION DIA: .105-.150
3. TONGUE MATERIAL THK: .031±.002
4. BODY & SLEEVE: TIN PLATE PER ASTM B545,
5. BODY & SLEEVE- CU PER ASTM B152
   INSULATION - PVF2, COLOR - NATURAL
6. APPLIES FROM EDGE OF METAL WIRE BARREL TO CENTER OF STUD HOLE.

MILITARY P/N & CLASS	"W"	"C"	"E"	"G" DIA	"S"	"L"	QTY	PACKAGE TYPE	PART NO
M7928/4-155 CLASS 2	.713	.530 MIN	.934 MAX	.515±.005	1/2"	1.298 MAX	1000	LOOSE PIECE	1-696423-0
M7928/4-110 CLASS 2	.531	.546 MIN	.950 MAX	.390±.005	3/8"	1.223 MAX	1000	LOOSE PIECE	696423-9
M7928/4-109 CLASS 2	.469	.437 MIN	.841 MAX	.328±.005	5/16"	1.083 MAX	1000	LOOSE PIECE	696423-8
M7928/4-154 CLASS 2	.469	.437 MIN	.841 MAX	.265±.005	1/4"	1.083 MAX	1000	LOOSE PIECE	696423-7
M7928/4-108 CLASS 2	.312	.281 MIN	.685 MAX	.197±.003	#10	.849 MAX	1000	LOOSE PIECE	696423-6
M7928/4-153 CLASS 2	.312	.281 MIN	.685 MAX	.171±.003	#8	.849 MAX	1000	LOOSE PIECE	696423-5
M7928/4-107 CLASS 2	.312	.281MIN	.685 MAX	.145±.003	#6	.849 MAX	1000	LOOSE PIECE	696423-4
M7928/4-106 CLASS 2	.250	.171 MIN	.575 MAX	.145±.003	#6	.708 MAX	1000	LOOSE PIECE	696423-3
M7928/4-152 CLASS 2	.250	.171 MIN	.575 MAX	.119±.003	#4	.708 MAX	1000	LOOSE PIECE	696423-2

AMP INCORPORATED
CUSTOMER SERVICE SYSTEMS

FOR ADDITIONAL PRODUCT INFORMATION OR COPIES OF DRAWINGS AND TECHNICAL DOCUMENTS	PRODUCT INFORMATION CENTER 1-800-522-6752
FOR APPLICATION TOOLING INFORMATION	TOOLING ASSISTANCE CENTER 1-800-722-1111
FOR ORDER ENTRY	1-800-526-5142

THIS DRAWING IS A CONTROLLED DOCUMENT FOR AMP INCORPORATED. IT IS SUBJECT TO CHANGE AND THE CONTROLLING ENGINEERING ORGANIZATION SHOULD BE CONTACTED FOR THE LATEST REVISION.

MAX RECOMMENDED OPERATING TEMPERATURE: 150°C MAX

VOLTAGE RATING: -

CIRCULAR MIL AREA: 1.04-2.62mm² [2,050-5,180] STRANDED

THIS DRAWING IS A CONTROLLED DOCUMENT.

DIMENSIONS: INCHES

TOLERANCES UNLESS OTHERWISE SPECIFIED:
0 PLC ± -
1 PLC ± -
2 PLC ± -
3 PLC ± -
4 PLC ± -
ANGLES ± -

MATERIAL - 5

FINISH - 4

DWN	JR RUTH	22JUL05
CHK	T MICHIELUTTI	22JUL05
APVD	T MICHIELUTTI	22JUL05
PRODUCT SPEC	—	
APPLICATION SPEC	—	
WEIGHT	—	

Tyco Electronics
Tyco Electronics Corporation
Harrisburg, Pa 17105-3608

NAME
TERMINAL, RING TONGUE,
PVF2 , P.I.D.G.
WIRE SIZE: 16-14 AWG

SIZE	CAGE CODE	DRAWING NO	RESTRICTED TO
A3	00779	C-696423	—

CUSTOMER DRAWING

SCALE	SHEET	REV
4:1	1 OF 1	A1

Mouser Electronics

Authorized Distributor

Click to View Pricing, Inventory, Delivery & Lifecycle Information:

TE Connectivity:

696423-7