THIS DRAWING IS UNPUBLISHED. RELEASED FOR PUBLICATION - - -
© COPYRIGHT By - ALL RIGHTS RESERVED.

LOC	DIST	REVISIONS					
CM	00	P	LTR	DESCRIPTION	DATE	DWN	APVD
			G2	REVISED PER ECR-15-017664	29DEC2015	NL	DZ

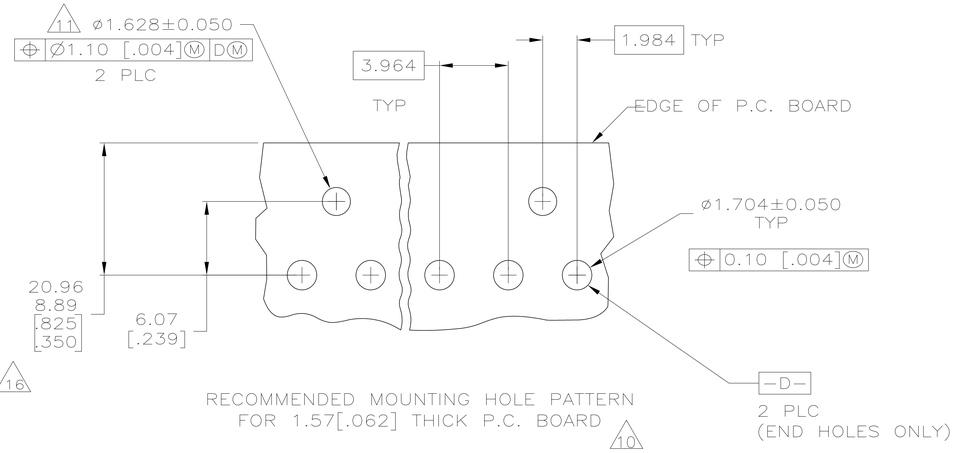

RECOMMENDED MOUNTING HOLE PATTERN
FOR 1.57[.062] THICK P.C. BOARD

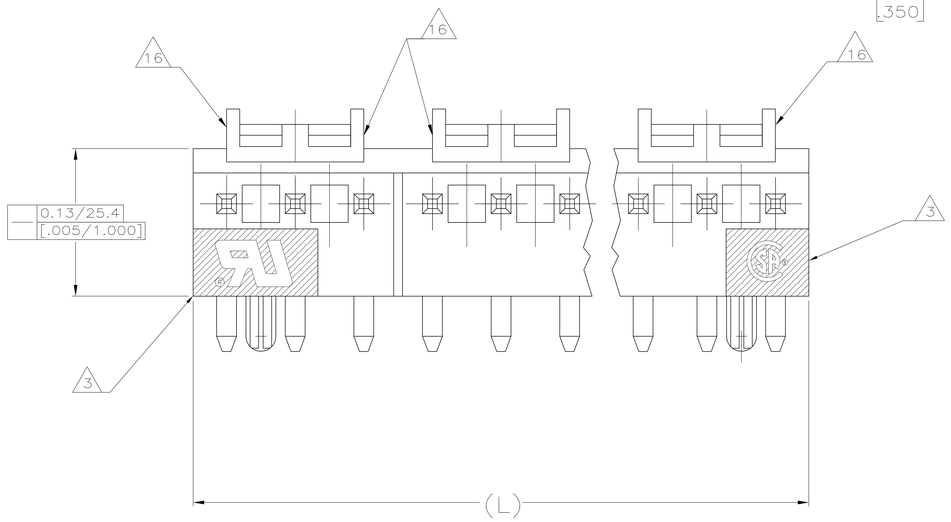

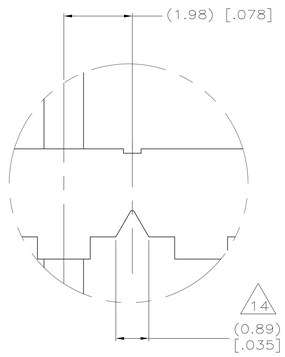

DETAIL C

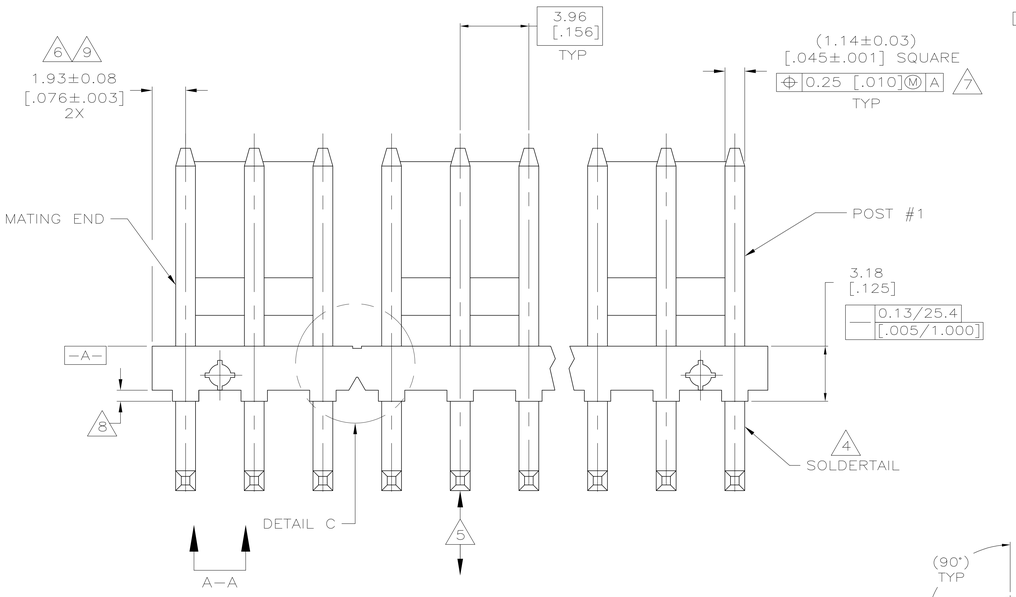

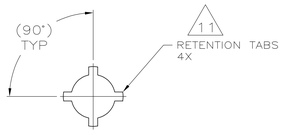

VIEW A-A
SCALE 16:1

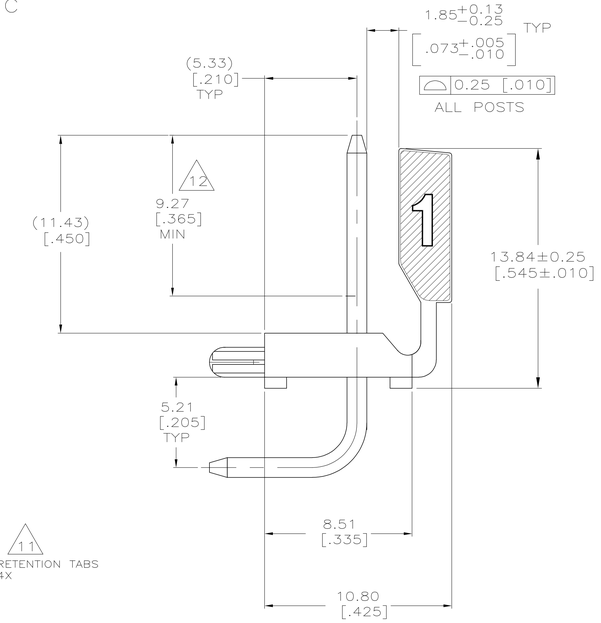

1. MATERIAL
   HOUSING: THERMOPLASTIC POLYESTER, GLASS FILLED, UL94V-0
   POST: COPPER ALLOY
2. FINISH
   HOUSING: NATURAL
   POST: SEE NOTES 12, 13, & 17 FOR PLATING.
3. UL MARKING MAY NOT APPEAR ON THE 2 OR 3 POSITION SIZES. CSA MARKING MAY NOT APPEAR ON THE 2 POSITION SIZE.
4. POST SOLDERTAILS COMPLY WITH TYCO SOLDERABILITY SPECIFICATION 109-11-2.
5. POST WITHSTANDS 13.34 NEWTONS (3 LBS) MINIMUM AXIAL FORCE IN EITHER DIRECTION WITHOUT DISLODGING.
6. APPLIES AT -A-
7. APPLIES WHEN THE HEADER IS STRAIGHT.
8. PLASTIC PROJECTIONS PERMITTED IN THIS ZONE.
9. COORDINATE DIMENSIONS APPLIES FROM CENTER OF THE ACTUAL FEATURE.
10. SOLDER SIDE OF BOARD IS SHOWN.
11. THE RETENTION TABS PROVIDE A ONE-TIME INTERFERENCE FIT IN THE 1.63 [.064] DIAMETER BOARD HOLES FOR HEADER ASSEMBLY RETENTION DURING SOLDERING. FOUR TABS PER PEG, TWO PEGS PER HEADER ASSEMBLY (ONE PEG ONLY FOR 2 POSITION SIZE).
12. PLATING: GOLD PLATE AREA, 0.00076 [.000030] GOLD OR 0.00008 [.000003] MIN GOLD FLASH OVER 0.00068 [.000027] PALLADIUM NICKEL, PER TE CONNECTIVITY'S DISCRETION, ALL SIDES, OVER NICKEL UNDERPLATE, 0.00127 [.000050] MIN, ALL SIDES AND ENTIRE LENGTH OF POST.
13. PLATING: MATTE TIN PLATE AREA, 0.00381-0.00889 [.000150-.000350] THICK, ALL FOUR SIDES, OVER, 3.18 [.125] MINIMUM.
14. DIMENSIONS IN BRACKETS ARE IN INCHES.
15. ALL POSITION SIZES HAVE THE BACK WALL NOTCHED ON BOTH ENDS AS SHOWN. THE 2 THRU 5 POSITION SIZES HAVE SOLID BACK WALLS. POSITION SIZES 6 AND ABOVE HAVE AN INTERRUPTED BACK WALLS AT VARIOUS LOCATIONS (SEE TABLE FOR INTERRUPTION(S) LOCATIONS).
16. EDGE OF POLARIZING LOCK WALL TO BE IN LINE WITH CENTERLINE OF ADJACENT POST WITHIN ±0.13 [.005].
17. PLATING: MATTE TIN PLATE AREA, 0.00381-0.00889 [.000150-.000350] THICK, ALL FOUR SIDES, OVER, 3.18 [.125] MINIMUM.

17 12	4&5	7&8	11&12	14&15	71.20 [2.803]	18	4-644633-8
	4&5	7&8	10&11	13&14	67.23 [2.647]	17	19 ~~4-644633-7~~
	4&5	8&9	12&13		63.27 [2.491]	16	19 ~~4-644633-6~~
	4&5	8&9	11&12		59.31 [2.335]	15	19 ~~4-644633-5~~
	4&5	7&8	10&11		55.35 [2.179]	14	19 ~~4-644633-4~~
	4&5	7&8	10&11		51.38 [2.023]	13	19 ~~4-644633-3~~
	4&5	8&9			47.42 [1.867]	12	19 ~~4-644633-2~~
	4&5	7&8			43.46 [1.711]	11	4-644633-1
	3&4	7&8			39.50 [1.555]	10	19 ~~4-644633-0~~
	3&4	6&7			35.53 [1.399]	9	19 ~~3-644633-9~~
	4&5				31.57 [1.243]	8	19 ~~3-644633-8~~
	4&5				27.61 [1.087]	7	19 ~~3-644633-7~~
	3&4				23.65 [.931]	6	19 ~~3-644633-6~~
		NONE			19.69 [.775]	5	3-644633-5
		NONE			15.72 [.619]	4	3-644633-4
		NONE			11.76 [.463]	3	3-644633-3
		NONE			7.80 [.307]	2	3-644633-2
13 12	4&5	7&8	11&12	14&15	71.20 [2.803]	18	19 ~~1-644633-8~~
	4&5	7&8	10&11	13&14	67.23 [2.647]	17	19 ~~1-644633-7~~
	4&5	8&9	12&13		63.27 [2.491]	16	19 ~~1-644633-6~~
	4&5	8&9	11&12		59.31 [2.335]	15	19 ~~1-644633-5~~
	4&5	7&8	10&11		55.35 [2.179]	14	19 ~~1-644633-4~~
	4&5	7&8	10&11		51.38 [2.023]	13	19 ~~1-644633-3~~
	4&5	8&9			47.42 [1.867]	12	19 ~~1-644633-2~~
	4&5	7&8			43.46 [1.711]	11	19 ~~1-644633-1~~
	3&4	7&8			39.50 [1.555]	10	19 ~~1-644633-0~~
	3&4	6&7			35.53 [1.399]	9	19 ~~644633-9~~
	4&5				31.57 [1.243]	8	19 ~~644633-8~~
	4&5				27.61 [1.087]	7	19 ~~644633-7~~
	3&4				23.65 [.931]	6	19 ~~644633-6~~
		NONE			19.69 [.775]	5	19 ~~644633-5~~
		NONE			15.72 [.619]	4	19 ~~644633-4~~
		NONE			11.76 [.463]	3	19 ~~644633-3~~
		NONE			7.80 [.307]	2	19 ~~644633-2~~
BACK WALL INTERRUPTIONS BETWEEN POSTS					(L)	NO. OF POSN	ASSEMBLY

18. OBSOLETE PARTS: OBSOLETE CIS STREAMLINING PER D.RENAUD/D.SINISI
19. OBSOLETE PART NUMBER

THIS DRAWING IS A CONTROLLED DOCUMENT.	DWN S. HOOVER 25-FEB-2005	TE Connectivity	
	CHK D. BOSSI 25-FEB-2005		
DIMENSIONS: mm [INCHES]	APD D. BOSSI 25-FEB-2005	NAME MTA-.156 HEADER ASSEMBLY, POLARIZED LOCK, RIGHT ANGLE FRONT BEND,.045 SQUARE POST, .000030 GOLD PLATED,WITH RETENTION PEGS	
TOLERANCES UNLESS OTHERWISE SPECIFIED: 0 PLC ± / 1 PLC ± / 2 PLC ± 0.13 [.005] / 3 PLC ± / 4 PLC ± / ANGLES ±	PRODUCT SPEC 108-1051		
	APPLICATION SPEC 114-1020	SIZE A0 / CAGE CODE 00779 / DRAWING NO C-644633	RESTRICTED TO —
MATERIAL 1 / FINISH 2	WEIGHT		
	CUSTOMER DRAWING	SCALE N/A / SHEET 1 OF 1	REV G2

4809 (3/11)

Mouser Electronics

Authorized Distributor

Click to View Pricing, Inventory, Delivery & Lifecycle Information:

TE Connectivity:

3-644633-2